AUTHENTICATED
U.S. GOVERNMENT
INFORMATION
GPO

Federal Register

1–18–01 Thursday
Vol. 66 No. 12 Jan. 18, 2001
Book 1 of 2 Books
Pages 4607–5000

The **FEDERAL REGISTER** is published daily, Monday through Friday, except official holidays, by the Office of the Federal Register, National Archives and Records Administration, Washington, DC 20408, under the Federal Register Act (44 U.S.C. Ch. 15) and the regulations of the Administrative Committee of the Federal Register (1 CFR Ch. I). The Superintendent of Documents, U.S. Government Printing Office, Washington, DC 20402 is the exclusive distributor of the official edition.

The **Federal Register** provides a uniform system for making available to the public regulations and legal notices issued by Federal agencies. These include Presidential proclamations and Executive Orders, Federal agency documents having general applicability and legal effect, documents required to be published by act of Congress, and other Federal agency documents of public interest.

Documents are on file for public inspection in the Office of the Federal Register the day before they are published, unless the issuing agency requests earlier filing. For a list of documents currently on file for public inspection, see http://www.nara.gov/fedreg.

The seal of the National Archives and Records Administration authenticates the Federal Register as the official serial publication established under the Federal Register Act. Under 44 U.S.C. 1507, the contents of the **Federal Register** shall be judicially noticed.

The **Federal Register** is published in paper and on 24x microfiche. It is also available online at no charge as one of the databases on GPO Access, a service of the U.S. Government Printing Office.

The online edition of the **Federal Register** is issued under the authority of the Administrative Committee of the Federal Register as the official legal equivalent of the paper and microfiche editions (44 U.S.C. 4101 and 1 CFR 5.10). It is updated by 6 a.m. each day the **Federal Register** is published and it includes both text and graphics from Volume 59, Number 1 (January 2, 1994) forward.

GPO Access users can choose to retrieve online **Federal Register** documents as TEXT (ASCII text, graphics omitted), PDF (Adobe Portable Document Format, including full text and all graphics), or SUMMARY (abbreviated text) files. Users should carefully check retrieved material to ensure that documents were properly downloaded.

On the World Wide Web, connect to the **Federal Register** at http://www.access.gpo.gov/nara. Those without World Wide Web access can also connect with a local WAIS client, by Telnet to swais.access.gpo.gov, or by dialing (202) 512-1661 with a computer and modem. When using Telnet or modem, type swais, then log in as guest with no password.

For more information about GPO Access, contact the GPO Access User Support Team by E-mail at gpoaccess@gpo.gov; by fax at (202) 512–1262; or call (202) 512–1530 or 1–888–293–6498 (toll free) between 7 a.m. and 5 p.m. Eastern time, Monday–Friday, except Federal holidays.

The annual subscription price for the **Federal Register** paper edition is $638, or $697 for a combined **Federal Register,** Federal Register Index and List of CFR Sections Affected (LSA) subscription; the microfiche edition of the **Federal Register** including the Federal Register Index and LSA is $253. Six month subscriptions are available for one-half the annual rate. The charge for individual copies in paper form is $9.00 for each issue, or $9.00 for each group of pages as actually bound; or $2.00 for each issue in microfiche form. All prices include regular domestic postage and handling. International customers please add 25% for foreign handling. Remit check or money order, made payable to the Superintendent of Documents, or charge to your GPO Deposit Account, VISA, MasterCard or Discover. Mail to: New Orders, Superintendent of Documents, P.O. Box 371954, Pittsburgh, PA 15250–7954.

There are no restrictions on the republication of material appearing in the **Federal Register.**

How To Cite This Publication: Use the volume number and the page number. Example: 66 FR 12345.

SUBSCRIPTIONS AND COPIES

PUBLIC	
Subscriptions:	
Paper or fiche	**202–512–1800**
Assistance with public subscriptions	**512–1806**
General online information	**202–512–1530; 1–888–293–6498**
Single copies/back copies:	
Paper or fiche	**512–1800**
Assistance with public single copies	**512–1803**
FEDERAL AGENCIES	
Subscriptions:	
Paper or fiche	**523–5243**
Assistance with Federal agency subscriptions	**523–5243**

FEDERAL REGISTER WORKSHOP

THE FEDERAL REGISTER: WHAT IT IS AND HOW TO USE IT

FOR: Any person who uses the Federal Register and Code of Federal Regulations.

WHO: Sponsored by the Office of the Federal Register.

WHAT: Free public briefings (approximately 3 hours) to present:

1. The regulatory process, with a focus on the Federal Register system and the public's role in the development of regulations.
2. The relationship between the Federal Register and Code of Federal Regulations.
3. The important elements of typical Federal Register documents.
4. An introduction to the finding aids of the FR/CFR system.

WHY: To provide the public with access to information necessary to research Federal agency regulations which directly affect them. There will be no discussion of specific agency regulations.

WASHINGTON, DC

WHEN: February 20, 2001, from 9:00 a.m. to Noon (E.S.T.)

WHERE: Office of the Federal Register
Conference Room
800 North Capitol Street, NW.
Washington, DC
(3 blocks north of Union Station Metro)

RESERVATIONS: 202–523–4538

Printed on recycled paper.

Contents

Federal Register

Vol. 66, No. 12

Thursday, January 18, 2001

Agriculture Department
See Commodity Credit Corporation
See Food Safety and Inspection Service
See Forest Service

Air Force Department
NOTICES
Meetings:
Air University Board of Visitors, 4798

Centers for Disease Control and Prevention
NOTICES
Grants and cooperative agreements; availability, etc.:
Human Immunodeficiency Virus Prevention with Focus on Business and Labor, Youth-at-High Risk, and Migrant Workers, National Partnerships, 4830–4837
Meetings:
Disease, Disability, and Injury Prevention and Control Special Emphasis Panel, 4837–4838
Tuberculosis Elimination Advisory Council, 4838

Children and Families Administration
RULES
Head Start Program:
Vehicles used to transport children; safety features and safe operation requirements, 5295–5315
NOTICES
Agency information collection activities:
Proposed collection; comment request, 4838

Coast Guard
NOTICES
Merchant marine officers and seamen:
Random drug testing; minimum rate, 4887

Commerce Department
See Export Administration Bureau
See International Trade Administration
See National Oceanic and Atmospheric Administration
See National Telecommunications and Information Administration

Commodity Credit Corporation
RULES
Loan and purchase programs:
Farm Storage Facility Loan Program, 4607–4616

Defense Department
See Air Force Department
RULES
Federal Acquisition Regulation (FAR):
Products produced by forced or indentured child labor; acquisition prohibition, 5345–5349
Small entity compliance guide, 5348–5350

Education Department
NOTICES
Agency information collection activities:
Submission for OMB review; comment request, 4798
Grants and cooperative agreements; availability, etc.:
Postsecondary education—
Gaining Early Awareness and Readiness for Undergraduate Programs (GEAR UP), 4799–4800
Special education and rehabilitative services—
Migrant and Seasonal Farmworkers Program, 4800–4801
Postsecondary education:
Accrediting agencies and State approval agencies for vocational and nurse education institutions; national recognition; comment request, 4801–4803

Employment and Training Administration
NOTICES
Agency information collection activities:
Proposed collection; comment request, 4863–4864

Energy Department
See Federal Energy Regulatory Commission
RULES
Acquisition regulations:
Contractor legal management requirements, 4616–4627
Nondiscrimination on basis of sex in federally assisted education programs or activities; Federal financial assistance covered by Title IX, 4627–4639
Whistleblower protection:
Security requirements for protected disclosure under National Defense Authorization Act, 4639–4643
NOTICES
Environmental statements; availability, etc.:
Rocky Flats Environmental Technology Site, CO; plutonium residues and scrub alloy storage management, 4803–4805
Meetings:
Environmental Management Site-Specific Advisory Board—
Rocky Flats, CO, 4805–4806
Semi-Annual Chairs, 4806–4807
Natural gas exportation and importation:
Chinook Pipeline Co. et al., 4807–4808

Environmental Protection Agency
RULES
Air pollution control; new motor vehicles and engines:
Heavy-duty engine and vehicle standards and highway diesel fuel; sulfur control requirements, 5001–5194
PROPOSED RULES
Air quality implementation plans; approval and promulgation; various States:
Texas, 4756–4768
Water pollution control:
National Pollution Discharge Elimination System—
South Dakota; sludge management (biosolids) program modification application, 4768–4770
NOTICES
Meetings:
Science Advisory Board, 4824–4825
Pesticide registration, cancellation, etc.:
Aventis CropScience USA LP, 4825–4826
Reports and guidance documents; availability, etc.:
Radionuclides; implementation guidance, 4826

Executive Office of the President
See Presidential Documents
See Trade Representative, Office of United States

Export Administration Bureau
NOTICES
Export privileges, actions affecting:
Diago, Michel V., 4796

Federal Aviation Administration
RULES
Airworthiness directives:
Airbus, 4649–4651, 4658–4660, 4656–4658
British Aerospace, 4645–4647
British Aerospace (Jetstream), 4647–4649
Dassault, 4651–4654
Sikorsky, 4654–4655
NOTICES
Meetings:
Aviation Rulemaking Advisory Committee and Executive Committee, 4887–4888
Passenger facility charges; applications, etc.:
Cincinnati/Northern Kentucky International Airport, KY, 4888
Meadows Field Airport, CA, 4888–4889

Federal Deposit Insurance Corporation
NOTICES
Meetings; Sunshine Act, 4826–4827

Federal Election Commission
NOTICES
Meetings; Sunshine Act, 4827

Federal Energy Regulatory Commission
NOTICES
Electric rate and corporate regulation filings:
PSEG Nuclear LLC et al., 4810–4813
Virginia Electric & Power Co. et al., 4813–4816
Hydroelectric applications, 4809–4822
Meetings:
Interstate natural gas facility-planning seminar, 4822–4823
Applications, hearings, determinations, etc.:
Amoco Production Co. et al., 4808
Carnegie Interstate Pipeline Co., 4808
Central Hudson Gas & Electric Corp., 4808–4809
Equitrans, L.P., 4809
New York Independent System Operator, Inc., 4823–4824
Tennessee Gas Pipeline Co., 4810

Federal Highway Administration
NOTICES
Environmental statements; notice of intent:
King County, WA, 4889–4890

Federal Maritime Commission
NOTICES
Agreements filed, etc., 4827
Ocean transportation intermediary licenses:
Amad Forwarding Corp., 4827
Apollo Forwarders, Inc., et al., 4827–4828

Federal Railroad Administration
NOTICES
Exemption petitions, etc.:
Battle Ground, Yacolt & Chelatchie Prairie Railroad, 4890
Blacklands Railroad, 4892
Burlington Northern Santa Fe Railway Co., 4890–4891
Carthage, Knightstown & Shirley Railroad Co., 4891
Massena Terminal Railroad Co., 4891–4892
Oil Creek & Titusville Lines, 4892–4893

Federal Reserve System
NOTICES
Agency information collection activities:
Proposed collection; comment request, 4828
Banks and bank holding companies:
Change in bank control, 4829
Formations, acquisitions, and mergers, 4829
Permissible nonbanking activities, 4829–4830
Meetings; Sunshine Act, 4830

Federal Transit Administration
NOTICES
Grants and cooperative agreements; availability, etc.:
Transit assistance programs; apportionments, allocations, and program information (2001 FY), 4899–4956
Grants and cooperative agreements; certifications and assurances; annual list, 4957–4968

Fish and Wildlife Service
RULES
Fish and wildlife restoration; Federal aid to States:
National Boating Infrastructure Grant Program, 5281–5294
PROPOSED RULES
Endangered and threatened species:
Critical habitat designations—
Various plants from Kauai and Niihau, HI, 4782–4783
Wenatchee Mountains checker-mallow, 4783–4794
NOTICES
Environmental statements; availability, etc.:
Green River National Wildlife Refuge, KY; establishment; land protection plan, 4855–4856

Food and Drug Administration
PROPOSED RULES
Food for human consumption, and animal drugs, feeds, and related products:
Plant-derived bioengineered foods; premarket notice, 4706–4738
Human drugs and biological products:
Human gene therapy or xenotransplantation; data and information disclosure, 4688–4706
NOTICES
Reports and guidance documents; availability, etc.:
Voluntary labeling indicating whether or not foods have been developed using bioengineering, 4839–4842

Food Safety and Inspection Service
PROPOSED RULES
Meat and poultry inspection:
Ground or chopped meat and poultry products and single-ingredient products; nutrition labeling, 4969–4999

Forest Service
NOTICES
Environmental statements; notice of intent:
Coconino National Forests, AZ, 4795–4796
Meetings:
Intergovernmental Advisory Committee, 4796

General Services Administration
RULES
Federal Acquisition Regulation (FAR):
Products produced by forced or indentured child labor; acquisition prohibition, 5345–5349
Small entity compliance guide, 5348–5350
Federal Management Regulation:
Real property policies, 5357–5373

Health and Human Services Department
See Centers for Disease Control and Prevention
See Children and Families Administration
See Food and Drug Administration
See Health Care Financing Administration
See Health Resources and Services Administration
See National Institutes of Health
See Substance Abuse and Mental Health Services Administration

Health Care Financing Administration
RULES
Medicare and Medicaid:
Anesthesia services; hospital participation conditions, 4674–4687

Health Resources and Services Administration
NOTICES
Agency information collection activities:
Proposed collection; comment request, 4842–4843

Housing and Urban Development Department
NOTICES
Agency information collection activities:
Proposed collection; comment request, 4849–4850
Submission for OMB review; comment request, 4850–4853
Low income housing:
Housing assistance payments (Section 8)—
Operating cost adjustment factors, 4853–4855
Mortgagee Review Board; administrative actions, 4855
Regulatory waiver requests; quarterly listing, 5375–5396

Interior Department
See Fish and Wildlife Service
See Land Management Bureau
See Reclamation Bureau
See Surface Mining Reclamation and Enforcement Office

Internal Revenue Service
RULES
Income taxes:
Tax-exempt bonds issued for output facilities; guidance to State and local governments, 4661–4671
PROPOSED RULES
Income taxes:
Capitalization of interest and carrying charges properly allocable to straddles, 4746–4751
Hedging transactions, 4738–4746
Qualified cover calls; equity options with flexible terms, 4751–4754
Tax-exempt bonds issued for output facilities; guidance to State and local governments; cross-reference, 4754–4755
NOTICES
Agency information collection activities:
Proposed collection; comment request, 4897–4898

International Trade Administration
NOTICES
Antidumping and countervailing duties:
Administrative review requests, 4796–4797

International Trade Commission
NOTICES
Import investigations:
Plastic molding machines with control systems having programmable operator interfaces incorporating general purpose computers, and components, 4861
U.S.-Korea Free Trade Agreement establishment; economic impact, 4859–4860
Welded large diameter line pipe from—
Japan and Mexico, 4860–4861
Meetings; Sunshine Act, 4861–4862

Judicial Conference of the United States
NOTICES
Meetings:
Judicial Conference Advisory Committee on—
Civil Procedure Rules, 4862

Justice Department
NOTICES
Reports and guidance documents; availability, etc.:
Equal opportunity in federally conducted education and training programs; E.O. 13160 guidance document, 5397–5410
Voting Rights Act implementation; redistricting and retrogression guidance, 5411–5414

Labor Department
See Employment and Training Administration
See Occupational Safety and Health Administration
See Pension and Welfare Benefits Administration
RULES
Service Contract Act; Federal service contracts; labor standards, 5327–5343
NOTICES
Agency information collection activities:
Submission for OMB review; comment request, 4862
Reports and guidance documents; availability, etc.:
Forced or indentured child labor; list of products requiring Federal contractor certification, 5352–5356
Maintenance guidelines, 5350–5352

Land Management Bureau
NOTICES
Survey plat filings:
Idaho, 4856

National Aeronautics and Space Administration
RULES
Federal Acquisition Regulation (FAR):
Products produced by forced or indentured child labor; acquisition prohibition, 5345–5349
Small entity compliance guide, 5348–5350
NOTICES
Patent licenses; non-exclusive, exclusive, or partially exclusive:
Nascent Technology Solutions, LLC, 4866

National Highway Traffic Safety Administration
NOTICES
Motor vehicle safety standards:
Global technical regulations; recommendations for establishment under United Nations/Economic Commission for Europe 1998 Global Agreement, 4893–4894
Motor vehicle safety standards; exemption petitions, etc.:
EMB Inc., 4894–4896

National Institutes of Health
NOTICES
Meetings:
National Center for Research Resources, 4843
National Institute of Arthritis and Musculoskeletal and Skin Diseases, 4843–4845

National Institute of Dental and Craniofacial Research, 4844
National Institute of Diabetes and Digestive and Kidney Diseases, 4846
National Institute of General Medical Sciences, 4843
National Institute of Mental Health, 4845
National Institute of Neurological Disorders and Stroke, 4844
National Institute on Drug Abuse, 4846
National Library of Medicine, 4846–4847
Patent licenses; non-exclusive, exclusive, or partially exclusive:
HRA Pharma, 4847
R.W. Johnson Pharmaceutical Research Institute, 4847–4848
Trinity BioSystems, L.L.C., 4848

National Oceanic and Atmospheric Administration
NOTICES
Coastal zone management programs and estuarine sanctuaries:
State programs—
Intent to evaluate performance, 4797–4798

National Telecommunications and Information Administration
PROPOSED RULES
Commercial wireless communications service:
Frequency spectrum reallocation; private sector reimbursement to Federal entities, 4771–4782

Nuclear Regulatory Commission
NOTICES
Meetings; Sunshine Act, 4866–4867

Occupational Safety and Health Administration
RULES
Construction safety and health standards:
Steel erection, 5195–5280
Safety and health standards:
Bloodborne pathogens; occupational exposure; needlestick and other sharps injuries, 5317–5325

Office of United States Trade Representative
See Trade Representative, Office of United States

Pension and Welfare Benefits Administration
NOTICES
Agency information collection activities:
Proposed collection; comment request, 4864–4866

Presidential Documents
PROCLAMATIONS
Special observances:
Martin Luther King, Jr., Federal Holiday (Proc. 7390), 5415–5418
EXECUTIVE ORDERS
Committees; establishment, renewal, termination, etc.:
Training Opportunities, Advisory Committee on Expanding; extension (E.O. 13188), 5419

Public Health Service
See Centers for Disease Control and Prevention
See Food and Drug Administration
See Health Resources and Services Administration
See National Institutes of Health
See Substance Abuse and Mental Health Services Administration

Reclamation Bureau
NOTICES
Environmental statements; availability, etc.:
Pick-Sloan Missouri Basin Program, Angostura Unit, SD, 4858–4859
Reports and guidance documents; availability, etc.:
Inadvertent overruns for delivery of Colorado River water; definition and payback, 4856–4858

Research and Special Programs Administration
NOTICES
Hazardous materials transportation:
Safety advisories—
Compressed gas cylinders; unauthorized marking, 4896–4897

Securities and Exchange Commission
NOTICES
Investment Company Act of 1940:
Exemption applications—
CityFed Financial Corp., 4872–4874
Cova Series Trust et al., 4867–4870
PaineWebber PACE Select Advisors Trust et al., 4870–4872
Self-regulatory organizations; proposed rule changes:
Chicago Board Options Exchange, Inc., 4874–4879
Emerging Markets Clearing Corp., 4879
International Securities Exchange LLC, 4880–4882
National Association of Securities Dealers, Inc., 4882–4884
Philadelphia Stock Exchange, Inc., 4884–4885
Applications, hearings, determinations, etc.:
Public utility holding company filings, 4867

Small Business Administration
RULES
HUBZone program:
Administrative and operational improvements, 4643–4645

State Department
NOTICES
Art objects; importation for exhibition:
Gauguin's Nirvana: Portrait of Meyer de Haan, 4885–4886
Global Guggenheim: Selections from the Extended Collection, 4886
Meetings:
Overseas Security Advisory Council, 4886

Substance Abuse and Mental Health Services Administration
NOTICES
Meetings:
Women's Services Advisory Committee, 4848–4849

Surface Mining Reclamation and Enforcement Office
RULES
Surface coal mining and reclamation operations:
New Mexico, 4671–4673

Trade Representative, Office of United States
NOTICES
Meetings:
Industry Sector Advisory Committees—
Services, 4886–4887
Small and Minority Business, 4886

Transportation Department
See Coast Guard

See Federal Aviation Administration
See Federal Highway Administration
See Federal Railroad Administration
See Federal Transit Administration
See National Highway Traffic Safety Administration
See Research and Special Programs Administration

Treasury Department
See Internal Revenue Service

Separate Parts In This Issue

Part II
Department of Transportation, Federal Transit Administration, 4899–4956

Part III
Department of Transportation, Federal Transit Administration, 4957–4968

Part IV
Department of Agriculture, Food Safety and Inspection Service, 4969–4999

Part V
Environmental Protection Agency, 5001–5194

Part VI
Department of Labor, Occupational Safety and Health Administration, 5195–5280

Part VII
Department of the Interior, Fish and Wildlife Service, 5281–5294

Part VIII
Department of Health and Human Services, Administration for Children and Families, 5295–5315

Part IX
Department of Labor, Occupational Safety and Health Administration, 5317–5325

Part X
Department of Labor, 5327–5343

Part XI
Department of Defense; General Services Administration; National Aeronautics and Space Administration, 5345–5356

Part XII
General Services Administration, 5357–5373

Part XIII
Department of Housing and Urban Development, 5375–5396

Part XIV
Department of Justice, 5397–5410

Part XV
Department of Justice, 5411–5414

Part XVI
The President, 5415–5419

Reader Aids
Consult the Reader Aids section at the end of this issue for phone numbers, online resources, finding aids, reminders, and notice of recently enacted public laws.

CFR PARTS AFFECTED IN THIS ISSUE

A cumulative list of the parts affected this month can be found in the Reader Aids section at the end of this issue.

3 CFR

Proclamations

7390 5421

Executive Orders

13111 (amended by EO 13188) 5423

13188 5423

7 CFR

1436 4607

9 CFR

Proposed Rules:

317 4970

381 4970

10 CFR

719 4616

1040 4628

1042 4628

1044 4639

13 CFR

126 4643

14 CFR

39 (7 documents) ... 4646, 4648, 4649, 4651, 4654, 4656, 4659

21 CFR

Proposed Rules:

20 4688

192 4706

312 4688

592 4706

601 4688

26 CFR

1 4661

Proposed Rules:

1 (4 documents) 4738, 4746, 4751, 4754

29 CFR

4 5328

1910 5318

1926 5196

30 CFR

931 4672

40 CFR

69 5002

80 5002

86 5002

Proposed Rules:

52 4756

123 4768

41 CFR

101-6 5362

101-17 5362

101-18 5362

101-19 5362

101-20 5362

101-33 5362

101-47 5362

102-71 5362

102-72 5362

102-73 5362

102-74 5362

102-75 5362

102-76 5362

102-77 5362

102-78 5362

102-79 5362

102-80 5362

102-81 5362

102-82 5362

42 CFR

416 4674

482 4674

485 4674

45 CFR

1310 5296

47 CFR

Proposed Rules:

301 4771

48 CFR

Ch. 1 5352

22 5349

52 5349

931 4616

970 4616

50 CFR

86 5282

Proposed Rules:

17 (2 documents) 4782, 4783

Rules and Regulations

Federal Register

Vol. 66, No. 12

Thursday, January 18, 2001

This section of the FEDERAL REGISTER contains regulatory documents having general applicability and legal effect, most of which are keyed to and codified in the Code of Federal Regulations, which is published under 50 titles pursuant to 44 U.S.C. 1510.

The Code of Federal Regulations is sold by the Superintendent of Documents. Prices of new books are listed in the first FEDERAL REGISTER issue of each week.

DEPARTMENT OF AGRICULTURE

Commodity Credit Corporation

7 CFR Part 1436

RIN 0560–AG00

Farm Storage Facility Loan Program

AGENCY: Commodity Credit Corporation, USDA.

ACTION: Final rule.

SUMMARY: This rule finalizes an interim rule implementing the Commodity Credit Corporation's (CCC) Farm Storage Facility Loan Program (FSFLP). The program provides financing for producers to build or upgrade farm storage and handling facilities. On the basis of the comments and suggestions received, CCC is making several changes to the program provisions in the interim rule and is adding other provisions.

DATES: This rule is effective January 18, 2001.

ADDRESSES: Copies of the regulation are available from Price Support Division, Farm Service Agency, 1400 Independence Avenue, SW., STOP 0512, Washington., DC 20250–0512.

FOR FURTHER INFORMATION CONTACT: Chris Kyer, (202) 720–7935 or e-mail chris_kyer@wdc.fsa.usda.gov.

SUPPLEMENTARY INFORMATION:

Executive Order 12866

This rule is issued in conformance with Executive Order 12866 and has been determined to be economically significant and has been reviewed by the Office of Management and Budget. The Cost/Benefit Assessment is summarized below.

Regulatory Flexibility Act

It has been determined that the Regulatory Flexibility Act is not applicable to this rule because the Farm Service Agency is not required by 5 U.S.C. 553 or any other provision of law to publish a notice of proposed rulemaking with respect to the subject matter of this rule.

Small Business Regulatory Enforcement Fairness Act of 1996 (SBREFA) (Chapter 8 of the Administrative Procedures Act)

The SBREFA generally requires that major rules be submitted to Congress for a 60-day review period before they may be made effective. This rule is considered major. However, section 808 of SBREFA (5 U.S.C. 808) provides that if good cause exists and public notice is impracticable, unnecessary, or contrary to the public purpose, a rule may be made effective immediately. CCC finds that because this rule affects the incomes of a large number of agricultural producers that it would be contrary to the public interest to delay this rule. Therefore, this rule is issued as final, effective immediately.

Environmental Evaluation

It has been determined by an environmental evaluation that this program, as a whole, will have no significant impact on the quality of the human environment. Therefore, neither an environmental assessment nor an environmental impact statement for the program is needed. However, because it is possible that individual projects may have limited impacts on the local environment, environmental evaluations for each project will be conducted to determine the need for environmental assessment and/or mitigation.

Executive Order 12988

This rule has been reviewed in accordance with Executive Order 12988. The provisions of this rule preempt State laws to the extent such laws are inconsistent with the provisions of this rule. Before any legal action may be brought regarding this rule, the administrative appeal provisions set forth at 7 CFR part 780 must be exhausted.

Executive Order 12372

This program is not subject to the provisions of Executive Order 12372, which require intergovernmental consultation with State and local officials. See the notice related to 7 CFR part 3014, subpart V, published at 48 FR 29115 (June 24, 1983).

The Unfunded Mandates Reform Act of 1995

This rule contains no Federal mandates under the regulatory provisions of Title II of the Unfunded Mandates Reform Act of 1995 (UMRA) for State, local, and tribal governments or the private sector. Thus, this rule is not subject to the requirements of sections 202 and 205 of the UMRA.

Paperwork Reduction Act of 1995

A notice with request for comments on the information collection was part of the interim rule. An emergency information collection package has been approved by OMB and assigned OMB control number 0560–204. No comments were received from the public during the 60-day comment period regarding the information collection. A regular information collection package will be submitted to OMB.

Executive Order 12612

It has been determined that this rule does not have sufficient Federalism implications to warrant the preparation of a Federalism Assessment. The provisions contained in this rule will not have a substantial direct effect on States or their political subdivisions, or on the distribution of power and responsibilities among the various levels of government.

Cost-Benefit Assessment Summary

U.S. grain storage capacity steadily declined from 1987 to 1997. Storage capacity has increased modestly since its low in 1997, but not sufficiently to keep pace with growing production. Despite persistent harvest-time storage capacity shortfalls and the advantages of on-farm storage for producers, low commodity prices and reduced farm income will limit the ability of producers to significantly expand their on-farm storage. The FSFLP will encourage the construction of grain storage capacity in deficit areas and help farmers adapt to identity-preserved storage and handling requirements for genetically enhanced production. The program will also assist dairy and livestock feeders who need new or additional silage or green-chop storage. For these producers, additional storage capacity increases their ability to manage feed inventories and control feed costs. One direct benefit to

producers from the program will be reduced financing costs on facility construction. Interest savings for a grain farmer on the construction of a 15,000-bushel grain bin could total as much as $5,417 under the program when compared with financing through some commercial banks. Interest savings for a dairy or livestock feeder could be as much as $6,139 on a 2,000-ton bunker-type silage storage facility. Grain producers would also benefit from the potential for higher market returns on their crops because on-farm storage capacity creates pricing and hedging opportunities that can significantly increase marketing returns. The program is expected to expand on-farm grain storage by 746 million bushels and on-farm silage storage by 4.75 million tons over the next 5 years.

Background

The interim rule published in the **Federal Register** on May 11, 2000 (65 FR 30345) set out regulations to allow for loans to be made to assist producers in providing storage for certain agricultural commodities. The back ground provisions of that rule described, in addition, the statutory underpinnings of the program, those being provisions of the Commodity Credit Corporation Charter Act. One of those provisions is 15 U.S.C. 714c(b) (section 5(b) of that Act), which authorizes CCC to use its general powers to make available material and facilities required in connection with the production and marketing of agricultural commodities. Another is 15 U.S.C. 714b(h) (section 4(h) of the Act), which was incorrectly identified as section ''4(f)'' in the interim rule. The latter provides that the Corporation may make loans to grain producers needing storage facilities.

Comments regarding the provisions of the program were accepted until June 12, 2000. Comments were received from 272 entities or persons: 40 agricultural associations, six banks, one Commissioner of Agriculture, 19 FSA county committee members, 109 private agricultural companies or corporations representing storage structure manufacturers, distributors and construction contractors, one United States Senator, five grain storage elevator companies or cooperatives, 57 farmers, and 34 FSA State committee members or representatives.

Most of the comments addressed particular provisions in the interim rule. These are discussed below on a section-by-section basis, along with the changes that have been made to the interim rule. Changes to each section based on the experience of operating the program under the interim rule are also discussed on a section-by-section basis.

Background section of the interim rule

There were 63 comments regarding the background section of the interim rule. Within the background section of the interim rule it was stated that section 5(b) of the CCC Charter Act gives CCC broad authority to make available materials and facilities required in connection with the production and marketing of agricultural commodities. Thus, it was stated that CCC would explore making available facility loans for the storage of commodities harvested as other than grain such as silage, alternative types of storage arrangements such as ''condominium storage'', or storage facilities for other agricultural products.

There were 15 comments from elevators, agricultural associations, and cooperatives supporting a program to finance condominium-type storage arrangements. There were two respondents who did not favor such a program for on-farm type condominium storage because in their States, Ohio and Iowa, on-farm condominium storage would be subject to licensing requirements for public warehouses. Another respondent was against off-farm condominium storage because, in their opinion, on-farm storage works better for segregation of speciality crops.

Condominium-type grain storage is generally viewed as commercial off-farm storage offered by private companies or cooperatives where farmers can lease or purchase a set amount of shared storage space for a period of time. Farmers pay a set time purchase or lease fee for the storage and may subsequently pay an annual fee to cover the costs associated with the maintenance of the structure and grain maintenance and handling. In some cases, the condominium storage on a per-bushel basis may be less than the cost of constructing and owning on-farm grain storage structures. During years when the owner of the condominium storage may not use the entire quantity that is allocated to him, the storage owner may sublease or sell the space to another producer. This arrangement can result in giving condominium storage a value, which may be used by lenders as collateral to secure loans on condominium storage agreements. Condominium storage may allow the producer to market grain without further transportation or handling costs, and relief from the costs of owning and maintaining on-farm storage. Also a respondent pointed out that condominium storage loans if made to cooperatives could allow for a lessening of the administrative burden of operating the program by allowing the storage needs of multiple producers to be dealt with in one large loan rather than in many small loans.

The primary disadvantage of condominium storage expressed by some farmers is the waiting time to deliver their grain to the elevator when they should be in the field harvesting grain because the condition of the crop and ideal harvesting conditions are always time sensitive. On-farm storage provides that flexibility. Also, farmers indicate that once grain is delivered to the elevator, they may lose marketing flexibility because to sell grain that is in elevator storage they may be required to pay additional handling fees. Despite the comments received supporting a loan program for condominium storage, the respondents provided little information as to how FSA should operate such a program. Inasmuch as the primary focus of the program was on-farm storage and helping producers cope with their restricted storage capacity, condominium storage might not mitigate the storage problem and might ultimately only benefit commercial facilities who already have alternate financing at their disposal. Because a program including condominium storage would differ considerably from the on-farm storage program, at issue are program provisions such as the term of the loan; loan security requirements; who should be the borrower, (the elevator or individual farmers); eligible types of storage structures and handling equipment; applicant eligibility requirements; the maximum loan amount; environmental law compliance for large commercial storage structures; and loan servicing provisions such as loan assumptions, foreclosure procedures, loan deferments and extensions. CCC has not prepared a cost benefit assessment regarding off-farm condominium storage and must do so to consider implementing such a program. Also, it should be pointed out that farmers wishing to receive loans for shared, on-farm storage may do so under the present program as long as they otherwise meet all of the eligibility and security requirements. Accordingly, for these reasons, CCC will not implement loans for condominium type storage at this time.

There were nine comments regarding the timeliness of the program announcement. Generally, the announcement of the program on May 11 was regarded as being too late to allow producers to apply, obtain approval, and to finish construction in time to store crops that will be harvested for the 2000 crop year. To

assist producers who took purchase actions based on the announcement of the program in the press on February 2, 2000, CCC provided that producers who made purchase decisions between February 2 and May 30, 2000, could apply and be approved for loans, if all other eligibility requirements were met. Furthermore, citing a critical need for storage in 19 States and recognizing the need to implement the program as soon as possible, CCC implemented the program under the interim rule effective on May 11, 2000. Additional relief in this regard would not be consistent with the nature of this program, which is designed to provide incentives rather than to make payments for past actions.

There were eight comments regarding the need for a program to finance the construction of storage for other agricultural products such as dry peas, lentils, peaches, cherries, pears, berries, vegetables, apples (including necessary cold storage equipment and cold storage supplies such as nitrogen), cotton seed, dry beans, straw, nuts, peanuts, rye, wood, wool, seed potatoes, grass seed, rice straw, livestock feed such as processed feed, cake, purchased feed, millet, and sugar. There were 16 comments supporting loans for structures to store dry hay. While CCC recognizes the support for such a program, CCC will not implement a program because of the lack of any USDA study indicating a critical need for a program to finance such storage for these commodities.

There were 130 comments regarding the provision to restrict the program to specified facility loan commodities harvested as whole grain as set out, and specified, in the interim rule. Under that rule, eligible facility loan commodities were limited to wheat, rice, soybeans, sunflower seed, canola, rapeseed, safflower, flaxseed, mustard seed, crambe, other oilseeds as determined and announced by CCC, corn, grain sorghum, oats, or barley harvested as whole grain. These commodities are the same commodities on which farmers can obtain CCC marketing assistance loans and loan deficiency payments. Generally, the respondents favored the financing of structures to store corn silage and other facility loan commodities that are commonly harvested as other than whole grain citing that dairy farmers are expanding their herds and need more upright silos for grains and forage to feed their animals, many farmers have been using temporary storage, and that it is more economical to store high moisture ground ear corn, high moisture shell corn, or corn silage to save on the cost of fuels for drying. Also, comments were received concerning the provisions in the interim rule that limited financing to certain kinds of facilities—certain cribs or bins designed for whole grain storage, certain upright silo-type structures designed for whole grain storage and flat-type storage structures for which the primary use is to store whole grain commodities. Some respondents favored extending financing also to other structures such as upright silos and bunker-type storage structures that are horizontal and generally constructed of concrete. Bunker-type silos are generally easier and cheaper to construct than upright silos because they are usually constructed from precast reinforced concrete panels and may have more recovery value than poured cement structures.

The interim rule specifically sought comments on extending the program beyond whole grain storage. Given CCC's broad authority, under the CCC Charter Act, to make available materials and facilities in the production and marketing of ''agricultural commodities'' and the overwhelming sense of the comments received, it has been determined that CCC will extend the program beyond facilities designed only for whole grain storage. Accordingly, eligible ''facility loan commodities'' (that is, the kind of commodities for which the building of a storage facility can be allowed under the rule) will be extended to also include corn, grain sorghum, wheat, oats or barley that is harvested for non-whole-grain use. Accordingly, the rule will also be amended to specifically provide for financing structures that are designed for that purpose. Other commodities will not at this time be folded into the program definition of ''facility loan commodities'' so as to expand the program further. Such an expansion would at a minimum involve a large-scale increase in the complexity of the program given that many commodities can have special needs such as refrigeration. Thus, the administrative difficulties of the program would increase dramatically. Moreover, and more importantly, the storage crisis mentioned in the interim rule was a crisis in the storage of grain (and certain related) crops and an expansion of the program beyond those would disperse the effect of the program unless there was to be a much greater commitment of funds to the program. At this time, there does not appear to be a justification for that kind of additional expenditure. On the other hand, the limited expansion, for silage, will allow farmers who grow the covered crops to have the flexibility of addressing their storage needs for all harvesting of their crop. This modest expansion should be workable, which, accordingly, closes the circle of storage needs for certain producers, does so without undue difficulty and should allow program expense to remain within reasonable bounds. Also, to the extent that silage facilities are available, such availability could remove the pressure that might otherwise exist in particular cases to make use of the storage available for whole grain harvesting of the same crop. In that sense, the expansion of eligibility will also tend to further the goals of the original interim rule. Further, this limitation of the program is also in accord with the special emphasis given in the Charter Act on grain crops as evidenced by Section 4(h) of that Act. Also for the sake of cohesiveness, the provisions in the rule dealing with eligible structures have also been amended to allow for bunker-silo type structures, in accord with the comments. Still further, certain clarifying changes have been made in the rules as regards pre-owned and manufactured structures.

There were six comments from banks regarding the need to implement a guaranteed farm storage facility loan program with an interest rate buy-down provision in addition to the direct loan program. Respondents cited the advantages of a guaranteed loan program such as easing the program administrative burden on already overburdened FSA employees, better use of taxpayer dollars, assisting more producers, and the level of good experience with banks that already participate in FSA's guaranteed loan program for FSA ownership and farm operating loans. While CCC recognizes the support for such a program, none of the respondents provided any information as to how CCC should operate such a program and an interest rate buy-down provision could prove to be very costly compared to the current program. Accordingly, CCC will not implement a guaranteed loan program at this time.

Section 1436.3 of the Interim Rule

There were no comments on this section, but the reference to a consent, disclaimer and subordination agreement was deleted and the definition of a severance agreement, and a subordination agreement were added to further clarify definitions. A definition of unsatisfactory credit history was added to provide guidance on eligibility determinations to approving county committees. The term ''tribal venture'' was added to the definition of a person to clarify that such ventures are eligible

for the program. Finally, a definition of the calculation for computing the storage need requirement was added to provide further clarification.

Section 1436.4 of the Interim Rule

In order to clarify what actions applicants may take before a loan can be approved, section 1436.4(b) was amended by identifying the actual actions producers may take. Furthermore, the provision allowing producers who took actions between February 2, 2000 and May 30, 2000 to be considered for loans was removed because those producers should have been accommodated during the time the program was operated under the interim rule. That provision is, thus, no longer needed but its removal will not affect prior loans.

Section 1436.5 of the Interim Rule

There were five comments regarding the provision in section 1436.5(a)(5) that requires an eligible borrower to provide proof of crop insurance. Generally, the respondents, three farmers, one FSA State Executive Director, and the American Farm Bureau Federation, questioned the value of crop insurance in furthering an applicant's repayment ability when crop losses occur, the additional cost an applicant may incur just to obtain a farm storage facility loan and the subsequent costs to maintain the insurance during the term of the loan. CCC will not change the requirement except that, based on the comments, we will not require insurance on crops that are determined to be economically insignificant by CCC. A definition for a crop of economic significance was added to the definitions section 1436.3 and the provision was clarified in 1436.5(a)(5).

There was one comment regarding the requirement for applicant compliance with the Debt Collection Improvement Act of 1996. Because this is a statutory requirement, CCC cannot change the requirement. Section 1436.5(a)(2) was amended, however, to further clarify the provision dealing with compliance with the Debt Collection Improvement Act.

There were several comments regarding section 1436.5(a)(4), which requires that in order for an applicant to be eligible for a loan, the applicant must demonstrate a need for an increase in storage capacity. This does not allow farmers with adequate existing capacity to be eligible for a loan to add or replace handling and drying equipment or to upgrade existing storage space. Based on this comment, and because CCC encourages the proper handling and maintenance of stored commodities, section 1436.5(a)(4) and section 1436.6(b)(1) have been amended to allow loans for handling and drying equipment, and for loans to upgrade existing storage capacity without increasing storage capacity. We also amended section 1436.5(a)(1) to make reference to the definition of satisfactory credit history and to make reference to a current financial statement. Finally, section 1436.5(a)(10) was added to require that borrowers may not have been convicted under Federal or State law of certain controlled substance violations in order to conform to the rule according to 7 CFR Part 718.

Section 1436.6 of the Interim Rule

A comment from the Pennsylvania FSA State committee questioned the definition of commercial purpose. Commercial purpose is defined as the storage and handling of grain, whether paid or unpaid, for persons other than the applicant. According to the respondent and other State offices, this definition hinders family operations where family members store their commodities together. Recognizing this problem, CCC amended the definition of a commercial operation in section 1436.3 to exempt immediate family members from this requirement.

Two respondents questioned the requirement that the program only allows loans to be made on new storage structures. One stated that pre-owned equipment should be considered to be eligible if CCC's interest is protected. Another suggested that 1436.6(a)(2) be changed to ''new oxygen limiting or used oxygen limiting storage built to original manufacturer's design specifications using original manufacturer's rebuild kits, and other upright silo type structures, designed for whole grain storage and having a useful life of at least 10 years.'' Based on this comment, as indicated, CCC amended section 1436.6 to allow for loans on remanufactured structures, built to original manufacturer's design specifications using original manufacturer's rebuild kits. Section 1436.6(b)(2) was amended to clarify that CCC may require safety equipment meeting OSHA standards. Section 1436.6(e) was added to provide that new storage and handling components of purchased pre-owned structures may be eligible for loan.

Section 1436.7 of the Interim Rule

There were several comments regarding the term of the loan, which is 7 years. It was suggested that the term be flexible at 7, 10, or 15 years depending on repayment ability. CCC will not change the term of the loan because at 7 years the term is longer than most commercial banks will offer and should be of sufficient length to allow the program goals to be met without jeopardizing repayment because of changed circumstances.

Section 1436.8 of the Interim Rule

There were 25 comments regarding this section, which provides for security for loans. Respondents generally cited a concern with the requirement in section 1436.8(b) that a lien on the real estate on which the farm storage facility is located will be required on all loans in the form of a real estate mortgage, deed of trust, or other security instrument approved by the CCC. Respondents were concerned that the requirement for what could be considered to be small loans was excessive and would create an unnecessary burden on loan applicants. CCC has responded to this concern by generally dropping the real estate lien requirement for loans with a principal amount less than $50,000. It was also recommended that all facility loans be cross collateralized when the facility is constructed on real estate where there is a direct FSA farm loan program mortgage in existence. Accordingly, section 1436.8(b) was amended to provide that a real estate lien will not be required for loans of $50,000 or less unless CCC determines through analysis of the applicant's financial condition that additional security in the form of a lien on real estate is necessary to protect CCC's interest in the collateral. Also, section 1436.8(b) has been clarified to provide that for loans exceeding $50,000, a junior lien position on the entire real estate parcel underlying the storage facility may be acceptable as long as CCC's security interest is sufficiently protected. Also section 1436.8(b) was amended to define when a loan is considered to be adequately secured and to specify that a title opinion or title insurance is required for loans exceeding $50,000. Section 1436.8(g) was amended to clarify fees that shall be paid by CCC or the applicant in connection with completing the loan transaction.

Section 1436.9 of the Interim Rule

There were 12 comments regarding this section, which explains how the amount of the loan is determined. Generally, the respondents cited a concern with the maximum amount of the loan, which is $100,000 per loan and the maximum aggregate outstanding loan balance, which is $100,000 per borrower. Respondents told FSA that $100,000 is not enough in many cases to finance the storage structures and handling equipment needed by some farmers to adequately store facility loan

commodities. One respondent stated that, ''Facilities and equipment can cost $500,000 or greater.'' An example of farm operations that may be adversely affected by this requirement are large family-run operations that have formed family partnerships. The family conducts business as a general partnership; however, generally, FSA recognizes for commodity programs that each member of the partnership can be a separate ''person'' for program payment purposes so long as certain conditions are met. For the purposes of the farm storage facility loan program under the interim rule, however, CCC limited the loan at $100,000 to the partnership since the loan limit was $100,000 per loan in all cases. As this limit may adversely impact some farmers contrary to normal principles that guide farm programs, section 1436.9 has been amended to change the maximum loan to $100,000 for each eligible borrower signing the loan note and security agreement and remove the limit of one loan per borrower per fiscal year. This will also allow more than one farmer to enter into a joint loan to share a storage structure with another and to receive a larger loan than one farmer acting alone. Section 1436.9 was also amended to remove the limit of one loan per borrower per fiscal year because the loan amount limit of $100,000 accomplishes the same thing as a limit on the number of loans a borrower may obtain.

Section 1436.10 of the Interim Rule

There were 13 comments regarding section 1436.10, which set out the down payment requirements for the program. The down payment amount is 25 percent of the total cost of the items eligible for loan. Respondents think that 25 percent is too high and that the requirement places undue burden on loan applicants to provide cash at a time when grain prices are low and cash flow problems exist. CCC recognizes this burden and has changed the requirement to 15 percent of the cost of the items eligible for loan. Also, CCC will allow fees such as attorney fees and archaeological study fees to be considered as an eligible net cost item (items that may be figured into the calculation of the total amount for which the loan may be made) and amended section 1436.9(b) to reflect the change. Finally, section 1436.10(b) was amended to clarify that farmers may obtain a loan for the down payment amount from another lending source.

Section 1436.11 of the Interim Rule

This section provides generally that the loan will be disbursed when all construction is complete, final cost data has been submitted, and the facility has been inspected and determined to be satisfactory by CCC. Four respondents addressed this portion of the rule and in one case the respondent suggested that the monies should be dispersed upon loan approval. Another suggested that the monies be dispersed upon delivery of the materials and a completion of the labor. Others suggested that the loan disbursements should always be jointly payable to both the borrower and the contractor or supplier, and that, in any event, CCC should always obtain a written release of liability from the contractor or supplier. The rule will continue allow the checks to be made payable to the borrower alone in certain cases as there does appear to be circumstance in which such payments could be made in that manner with sufficient security. However, the rule has been amended, in accord with the comments, to specify that in all cases a written release of liability from the contractors or suppliers involved will be required before loan funds are disbursed. These provisions should allow sufficient flexibility to handle all circumstances as might arise. Also, a provision was added to this section to specify that loan proceeds cannot be assigned. This will also reduce program complexity and allow for certainty in program administration.

Section 1436.12 of the Interim Rule

There were five comments regarding the interest rate for loans, which is the rate in effect on the date the loan is approved that is equivalent to Treasury securities of comparable maturity. Generally, respondents thought that the interest rate should be the lowest rate in effect at the time of application, approval, or disbursement. The rate allowed by the interim rule appears be to a fair rate, which will allow the accomplishment of the program goals and the terms of the rule, as provided for in the interim rule, will allow for certainty in the administration of loans. In the event that a applicant is dissatisfied with the rate, the applicant can withdraw from the program.

Section 1436.13 of the Interim Rule

There were five comments regarding section 1436.13, which provides provisions regarding repayment of the loan. Four comments focused on the term of the loan while one comment suggested discontinuance of the requirement to offset commodity loan or LDP proceeds towards facility loan installments before the installment is due or the borrower is delinquent. CCC will discontinue that requirement and amended section 1436.13(d) accordingly. Section 1436.13(c) was further amended to set out procedures that will be used in the event an installment is not paid.

Section 1436.15 of the Interim Rule

There was one comment regarding section 1436.15, which provides maintenance provisions for a program loan. The respondent suggested removing the requirement for an annual check by CCC of the loan collateral because FSA salary funds do not allow for ''extreme'' expenditures. CCC feels the requirement is reasonable and can be fulfilled with available resources.

Section 1436.16 of the Interim Rule

There were no comments regarding this section, but provisions have been added to this section for foreclosure, liquidation, and bankruptcy actions to help insure accomplishment of the goals of the program.

Section 1436.17 of the Interim Rule

There were two comments regarding the provision to require compliance with the National Environmental Policy Act. The provision requires that an environmental evaluation be conducted by CCC for each loan application. In most cases, this will require a farm visit to assess the impact of the proposed storage construction project on the environment and on historic and archaeological resources. Respondents generally indicated that the environmental assessment goes far beyond the intent and scope of a program designed to benefit farmers hard-pressed for storage capacity and in need of additional opportunities to enhance marketing returns. Respondents also pointed out that the requirement for compliance with local land use laws should be adequate for environmental compliance as well and that the interim rule states that the program as a whole will have no significant impact on the quality of the human environment. While CCC recognizes that the environmental review may delay loan approvals, this provision should help assure the maximum overall benefit from the expenditures to be made in this important program in conjunction with other programs, including conservation programs, operated by the participant.

Section 1436.18

Section 1436.18 was added to provide appeal provisions.

Additional editorial changes have also been made.

List of Subjects in 7 CFR Part 1436

Administrative practice and procedure, Loan programs—agriculture, Reporting and recordkeeping requirements.

Accordingly, for the reasons set forth in the preamble, 7 CFR part 1436 is revised to read as follows:

PART 1436—FARM STORAGE FACILITY LOAN PROGRAM REGULATIONS

Sec.

1436.1 Applicability
1436.2 Administration
1436.3 Definitions
1436.4 Availability of loans
1436.5 Eligible borrowers
1436.6 Eligible storage or handling equipment
1436.7 Term of loan
1436.8 Security for loan
1436.9 Loan amount and loan application approvals
1436.10 Down payment
1436.11 Disbursements and assignments
1436.12 Interest and fees
1436.13 Loan installments, delinquency, and acceleration of maturity date
1436.14 Taxes
1436.15 Maintenance, liability, insurance, and inspections
1436.16 Foreclosure, liquidation, assumptions, sale or conveyance, bankruptcy
1436.17 Environmental compliance
1436.18 Appeals

Authority: 15 U.S.C. 714 *et seq.*

PART 1436—FARM STORAGE FACILITY LOAN PROGRAM REGULATIONS

§ 1436.1 Applicability.

The regulations of this part provide the terms and conditions under which CCC may provide low-cost financing for producers to build or upgrade on-farm storage and handling facilities. Because liens and security interests related to this activity may be governed by state law, CCC may adapt certain procedures relating to those issues that may vary between States.

§ 1436.2 Administration.

(a) The Farm Storage Facility Loan Program shall be administered under the general supervision of the Executive Vice President, CCC or designee and shall be carried out in the field by FSA State committees, FSA county committees and FSA employees.

(b) FSA State committees, FSA county committees and FSA employees, do not have the authority to modify or waive any of the provisions of the regulations of this part.

(c) The FSA State committee shall take any action required by these regulations that has not been taken by the county committee. The FSA State committee shall also:

(1) Correct, or require the FSA county committee to correct, any action taken by such FSA county committee that is not in accordance with the regulations of this part; and

(2) Require the FSA county committee to withhold taking any action that is not in accordance with the regulations of this part.

(d) No provision or delegation herein to a State or FSA county committee shall preclude the Executive Vice President, CCC, or a designee, or the Administrator, FSA, or a designee, from determining any question arising under the program or from reversing or modifying any determination made by the State or FSA county committee.

(e) The Deputy Administrator, Farm Programs, FSA, may authorize State and FSA county committees to waive or modify deadlines and other program requirements in cases where lateness or failure to meet such other requirements does not adversely affect the operation of the Farm Storage Facility Loan Program.

(f) A representative of CCC may execute Farm Storage Facility Loan Program applications and related documents only under the terms and conditions determined and announced by CCC. Any such document that is not executed in accordance with such terms and conditions, including any purported execution prior to the date authorized by CCC, shall be void.

(g) The Deputy Administrator may suspend this program at any time when it appears that there is no shortage of storage that needs to be addressed or where some other reason shall arise for which it appears that the program goals can be achieved more efficiently in a manner different from that provided for in this rule.

§ 1436.3 Definitions.

The following definitions shall be applicable to the program authorized by this part and will be used in all aspects of administering this program:

Aggregate outstanding balance means the sum of the outstanding balances of all loans disbursed under this part to each borrower signing the note and security agreement.

Assumption means the act or agreement by which one borrower takes over or assumes the debt of another borrower.

Collateral means the storage structure, drying equipment or handling equipment securing the loan.

Crop of economic significance means any insurable facility loan commodity that contributes 10 percent or more of the total expected value of all crops grown by the loan applicant except if the expected liability under the catastrophic level of crop insurance for a crop is equal to or less than the administrative fee for the crop, that crop shall not be economically significant.

Facility loan commodity means wheat, rice, soybeans, sunflower seed, canola, rapeseed, safflower, flaxseed, mustard seed, crambe, other oilseeds as determined and announced by CCC, corn, grain sorghum, oats, or barley harvested as whole grain except that corn, grain sorghum, oats, wheat, or barley shall be included whether harvested as whole grain or other than whole grain.

Financing statement means the appropriate document that gives legal notice of a security interest in personal property when properly filed or recorded.

Non-movable or non-salable collateral means either collateral the county committee determines cannot be sold and moved to a new location because of the type of construction involved or because the collateral has deteriorated to the point that it has no sale recovery value.

Person means any individual, group of individuals, partnership, corporation, estate, trust, association, cooperative, tribal venture, or other business enterprise, or other legal entity who is, or whose members are, a citizen or citizens of the United States, or a legal resident alien.

Satisfactory credit history means a history of repaying debts as they came due unless the failure to repay or tardiness in payment was due to circumstance beyond the applicant's control as determined by CCC upon proof submitted by the applicant.

Severance agreement means an agreement under which a party may consent to the security interest of another in property thereby allowing the severance of a fixture from the real estate.

Storage need requirement means the result of up to the average of the most recent 3 years available planted acreage from the applicant's share of the applicable farm operation for each facility loan commodity requiring storage at the proposed storage location multiplied by the applicable crop yield as determined reasonable by the county committee, multiplied by two, and less the available existing storage capacity. If there is no acreage data available, including prevented planted acres, or the data is not applicable relative to the storage need, a reasonable acreage projection may be made for newly

acquired farms, changes in cropping operations, or for facility loan commodity crops being grown for the first time.

Subordination agreement means any agreement under which a party may subordinate a security interest in property to the interest of another party.

Uniform Commercial Code means the laws generally known by that name covering commercial transactions such as sales, negotiable instruments, and secured transactions.

§ 1436.4 Availability of loans.

(a) An application for a loan shall be submitted to the administrative county office that maintains the records of the farm or farms to which the application applies. With State office approval, loans may be made or serviced by a county office other than the administrative county office. Upon request, the applicant shall furnish information and documents as the State or county committee deems reasonably necessary to support the application. This may include financial statements, receipted bills, invoices, purchase orders, specifications, drawings, plats, or written authorization of access.

(b) Producers who authorize delivery, site preparation, or construction actions without an approved loan, do so at their own risk and without creating any liability on behalf of CCC.

§ 1436.5 Eligible borrowers.

(a) The term ''eligible borrower'' means any person who, as landowner, landlord, operator, producer, tenant, leaseholder, or sharecropper:

(1) Has a satisfactory credit history according to the definition in § 1436.3 and as recommended to the approving committee by a FSA employee with FSA loan approval authority;

(2) Demonstrates an ability to repay the debt arising under this program using a financial statement acceptable to CCC prepared within 90 days of the date of application, as recommended to the approving committee by a FSA employee with FSA loan approval authority;

(3) Has no disqualifying delinquent Federal debt under the Debt Collection Improvement Act of 1996;

(4) Is a producer of a facility loan commodity by CCC;

(5) Demonstrates a need for increased storage capacity as determined by CCC if the applicant is applying for a loan for a storage structure;

(6) Provides proof of crop insurance offered under the Federal Crop Insurance Program for insurable crops of economic significance on all farms operated by the borrower in the county where the storage facility is located;

(6) Is in compliance with USDA provisions for highly erodible land and wetlands conservation provisions according to 7 CFR part 12;

(7) Demonstrates compliance with any applicable local zoning, land use, and building codes for the applicable farm storage facility structures;

(8) Annually provides proof of flood insurance if CCC determines such insurance is necessary to protect the interests of CCC, and annually provides proof that the structures for which the loan is made has all peril structural insurance;

(9) Demonstrates compliance with the National Environmental Policy Act regulations at 40 CFR parts 1500–1508; and

(10) Has not been convicted under Federal or State law of a disqualifying controlled substance violation under 7 CFR part 718.

§ 1436.6 Eligible storage or handling equipment.

(a) Loans may be made only for the purchase and installation of eligible storage facilities and permanently affixed drying and handling equipment, for the remodeling of existing storage facilities, or for permanently affixed drying and handling equipment as provided in this section. Eligible storage and handling facilities shall include the following:

(1) New conventional-type cribs or bins designed and engineered for whole grain storage and having a useful life of at least 10 years;

(2) New oxygen-limiting storage structures or remanufactured oxygen-limiting storage structures built to the original manufacturer's design specifications using original manufacturer's rebuild kits, and other upright silo-type structures designed for whole grain storage or other than whole grain storage and having a useful life of at least 10 years; and

(3) New flat-type storage structures including a permanent concrete floor, designed for and primarily used to store facility loan commodities for the term of the loan and having a useful life of at least 10 years; and

(4) New structures that are bunker-type, horizontal, or open silo structures designed for whole grain storage or other than whole grain storage and having a useful life of at least 10 years.

(b) The calculation of the loan amount may include costs associated with building, improving, or renovating an eligible storage or handling facility, including:

(1) Permanently affixed grain handling equipment and grain drying equipment, including perforated floors determined by the approving committee to be needed and essential to the proper functioning of the grain storage system;

(2) Safety equipment as required by CCC and meeting OSHA requirements such as lighting, and inside and outside ladders;

(3) Equipment to improve, maintain, or monitor the quality of stored grain, such as cleaners, moisture testers, and heat detectors;

(4) Electrical equipment, including labor and materials for installation, such as lighting, motors, and wiring integral to the proper operation of the grain storage and handling equipment; and

(5) Concrete foundations, aprons, pits, and pads (including site preparation, labor and materials) essential to the proper operation of the grain storage and handling equipment.

(c) Storage and handling equipment with respect to which no loans for installation or related costs shall be disbursed under this part include:

(1) Portable grain drying equipment, portable handling equipment and portable augers;

(2) Structures of a temporary nature that require the weight or bulk of the stored commodity to maintain its shape (such as fences or bags);

(3) Used structures or handling equipment;

(4) Structures that are not suitable for storing the facility loan commodities for which a need is determined;

(5) Storage structures to be used for commercial purposes. Commercial purpose is defined as the storage and handling of grain, whether paid or unpaid, for persons other than the loan applicant, except for family members as defined in 7 CFR Part 718, and tenants or landlords sharing in the crop requiring storage. Any facility that is in working proximity to any commercial storage operation shall be considered to be part of a commercial storage operation; and

(6) Portable or permanent weigh scales.

(d) Loans may be approved for financing additions to or modifications of an existing storage facility with an expected useful life of at least 10 years if the county committee determines there is a need for the capacity of the structure, but not for the sole replacement of worn out items such as motors, fans, or wiring.

(e) Loans may be approved for new storage and handling components of a pre-owned structure provided the completed facility has a useful life of at least 10 years. The pre-owned structure must be purchased and moved to a new storage location. Eligible items for such a loan include costs such as new bin

rings or roof panels needed to make a purchased pre-owned structure useable, new aeration systems, site preparation, construction off-farm paid labor cost, foundation material and off-farm paid labor. Ineligible items for such a loan include the cost of purchasing and moving the used structure.

§ 1436.7 Term of loan.

The maximum term of the loan shall be 7 years from the date of execution of a promissory note and security agreement. No extensions of the loan term will be granted. The loan balance and all attendant costs are due 7 years from the date of the execution of the promissory note and security agreement.

§ 1436.8 Security for loan.

(a) Except as agreed to by CCC, all loans shall be secured by a promissory note and security agreement covering the farm storage facility. The promissory note and security agreement shall grant CCC a security interest in the collateral and shall be perfected in the manner specified in the laws of the state where the collateral is located. CCC's security interest in the collateral shall constitute the sole security interest in such collateral except for prior liens on the underlying realty that by operation of law attach to the collateral if it is or will become a fixture. If any such prior lien on the realty will attach to the collateral, a severance agreement must be obtained in writing from each holder of such a lien, including all government or USDA agencies. No additional liens or encumbrances may be placed on the storage facility after the loan is approved unless CCC approves otherwise in writing.

(b) For loan amounts exceeding $50,000, or where the aggregate outstanding loan balance will exceed $50,000 or for loans where the approving committee determines as a result of financial analysis that additional security is required, a lien on the real estate parcel on which the farm storage facility is located will be required in the form of a real estate mortgage, deed of trust, or other security instrument approved by the United States Department of Agriculture's Office of General Counsel. CCC's interest in the real estate shall be superior to all other liens and is the first lien that secures the amount of the loan. A loan will be considered to be adequately secured when the real estate security for the loan is at least equal to the loan amount. If the real estate is covered by a prior lien, a lien waiver may be obtained by means of a subordination agreement approved for use in the State by USDA's Office of General Counsel. CCC will not require such an agreement from any agency of the Department of Agriculture. Loans may be secured by a junior lien on real estate when the loan is adequately secured and a severance agreement is obtained from prior lien holders.

(c) Title insurance or a title opinion is required for loans secured by real estate.

(d) Real estate liens may cover land separate from the collateral if a lien on the underlying real estate is not feasible and if:

(1) The borrower owns the separate acreage; and

(2) the acreage has sufficient value based on the fair market value of the acreage at the time of the application as determined by the county committee, to insure repayment of the loan.

(e) Notwithstanding the preceding subsections of this section, a borrower, in lieu of such liens as are otherwise required by those subsections, may provide a letter of credit, bond, or other form of security, as approved by CCC.

(f) If an existing structure is remodeled and an addition becomes an attached, integral part of the existing storage structure, CCC's security interest shall include the existing storage structure.

(g) The cost of loan closings by attorneys, title opinions, title insurance, title searches, filing and recording all real estate liens, fixture filings and later subordinations will be paid by the borrower. CCC shall pay such costs relating to credit reports, collateral lien searches, and filing and recording financing statements for the collateral.

§ 1436.9 Loan amount and loan application approvals.

(a) The cost on which the loan shall be based is the net cost of the eligible facility, accessories, and services to the applicant after discounts and rebates, not to exceed a maximum per-bushel cost established by the FSA State committee.

(b) The net cost for storage facilities and handling equipment may include the following: all real estate lien related fees paid by the borrower, including attorney fees, except for filing fees, environmental and historic review fees including archaeological study fees, the facility purchase price, sales tax, shipping, delivery charges, site preparation costs, installation cost, material and labor for concrete pads and foundations, material and labor for electrical wiring, electrical motors, off-farm paid labor, on farm site preparation and construction equipment costs not to exceed commercial rates approved by the county committee, and new on-farm material approved by the county committee. The net cost shall not include secondhand material or any other item that is determined by the approving authority to be ineligible for loan.

(c) The maximum principal amount of any farm storage facility loan shall be 85 percent of the net cost of the applicant's needed storage or handling equipment not to exceed $100,000 for each borrower signing the note and security agreement. Unless otherwise approved by CCC, borrowers shall be considered to be separate persons or borrowers for purposes of applying the preceding sentence only to the extent that they would normally be considered a separate person under the rules set out in 7 CFR part 1400.

(d) The aggregate outstanding balance of all facility loans for any one borrower signing the note and security agreement may not exceed $100,000.

(e) When a storage structure has a larger capacity than the applicant's needed capacity, as determined by CCC, the net cost eligible for a loan shall be prorated. Only costs associated with the applicant's needed storage capacity will be considered eligible for loan under this part.

(f) When a flat storage structure has space that is not used primarily for facility loan commodity storage, such as office space, the loan amount shall be adjusted for the ineligible space as determined by CCC.

(g) The FSA county committee may approve applications, if loan funds are available, up to the maximum approval amount unless the FSA State committee establishes a lower limit for county committee approval authority.

(h) Loan approvals will expire 4 months after the date of approval unless extended in writing for an additional 4 months by the FSA State Committee.

(i) CCC may at any time refuse to make new loans.

§ 1436.10 Down payment.

(a) A minimum down payment representing the difference between the net cost of the storage facility and the amount of the loan determined in accordance with § 1436.9 shall be made by the loan applicant to the supplier or contractor before the loan is disbursed.

(b) The down payment shall be in cash unless some other form of payment is approved by CCC. The down payment may be obtained by the borrower from another lending source.

(c) The down payment may not include any trade-in, discount, rebate, credit, deferred payment, post-dated check, or promissory note to the supplier or contractor.

§ 1436.11 Disbursement and assignments.

(a) Disbursement of the loan by CCC will be made after the farm storage facility has been delivered, erected, constructed, assembled, or installed and a CCC representative has inspected and approved such facility.

(b) Disbursement will be made only if the borrower furnishes satisfactory evidence of the total cost of the facility and payment of all debts on the facility in excess of the amount of the loan.

(c) Disbursement may be made jointly to the borrower and the contractor or supplier, except disbursement may be made to the borrower only if CCC determines the borrower has paid the contractor or supplier all amounts that are due and owing with respect to the facility and that all applicable liens, security interests, or other encumbrances have been released.

(d) A release of liability will be required from contractors and suppliers providing goods and services to the loan applicant.

(e) Loan proceeds cannot be assigned.

§ 1436.12 Interest and fees.

(a) Loans shall bear interest at the rate equivalent, as determined by CCC, to the rate of interest charged on Treasury securities of comparable maturity on the date the loan is approved.

(b) The interest rate for each loan will remain in effect for the term of the loan.

(c) The loan applicant shall pay a non-refundable application fee in such amount determined appropriate by CCC, which fee may not in any case be less then $45.

§ 1436.13 Loan installments, delinquency, and acceleration of maturity date.

(a) Equal installments of principal plus interest will be amortized over the loan term for purposes of setting a payment schedule. Installments are due and payable not later than the last day of each 12-month period of the loan, until the principal plus interest has been paid in full.

(b) Each installment may be paid in cash, money order, wire transfer, or by personal, certified, or cashier's check. Repayment shall be applied first to accrued interest and then to principal.

(c) The following actions will be taken when installments are not paid on the due date: A demand for payment shall be mailed to the debtor after the due date has passed. If the installment is not paid within 30 days of the due date or if a new due date acceptable to CCC has not been established based on a financial plan submitted by the debtor, the initial demand may be followed by two subsequent written demands at approximately 30-day intervals unless other action is needed to protect the interests of CCC. If the debtor files an appeal according to § 1436.18 of this part, collection action shall cease until the appeal process is complete, however, any payments due the debtor may be withheld and, depending on the outcome of the appeal, may later be offset and applied to reduce the indebtedness. In lieu of a foreclosure on the collateral in the case of a delinquency, CCC may permit a rescheduling of the debt or other measures consistent with the collection of other debts under the provisions of Part 1403. Alternately, CCC may implement such other collection procedures as it deems appropriate.

(d) A claim shall be established against a borrower for any amounts remaining due after liquidation of the loan.

(e) CCC may declare the entire indebtedness immediately due and payable if the borrower violates any of the terms and conditions of this part, fails to pay any installment on time, or breaches any of the terms and conditions of any of the instruments executed in connection with the loan, or if , during the life of the loan, the collateral is used in connection with or by any unauthorized commercial operation including, but not limited to, elevators, warehouses, dryers or processing plants.

(f) Any action authorized by the provisions of this section may be taken:

(1) Against a debtor's pro rata share of payments due any entity that the borrower participates in, either directly or indirectly, as determined by CCC.

(2) Against related persons or entities, irrespective of the debtors share, when CCC determines that the debtor has established an entity, or reorganized, transferred ownership of, or changed in some other manner, their operation, for the purpose of avoiding the payment of the debt.

(g) The loan may be paid in full or in part without penalty at any time before maturity.

(h) Upon payment of a loan, CCC shall release CCC's security interest in the collateral.

§ 1436.14 Taxes.

The borrower must pay, when due, all real and personal property taxes that may affect CCC's security interest in all collateral securing the note evidencing the loan. To protect its interests, CCC may pay any unpaid taxes with respect to the collateral securing a loan made in accordance with this part, and if CCC does so, the borrower shall reimburse CCC for such payment, and if unpaid by the borrower, such debt shall become due immediately.

§ 1436.15 Maintenance, liability, insurance, and inspections.

(a) The borrower must maintain the loan collateral in a condition suitable for the storage of one or more of the facility loan commodities. For purpose of this section the term ''loan collateral'' shall mean any property of any kind that was built or improved, or acquired using a loan made under this part.

(b) Until the loan has been repaid, the borrower shall be liable for all damages to or destruction of the loan collateral. CCC shall not assume any loss of the loan collateral.

(c) CCC may conduct annual collateral inspections to insure compliance with this part. The borrower must consent to such inspection as a term of the loan and failure to supply such access shall put the borrower into default.

(d) Structures must be insured against all perils in all cases and must also be insured against flooding if the structure is located in a flood plain, as determined by CCC. Proof of flood insurance, if required, and proof of all peril structural insurance, must be provided to CCC annually. CCC must be listed as a loss payee on all peril and flood insurance policies.

(e) CCC shall have rights of ingress and egress where the facility is located. Failure of the borrower to secure such access will render a borrower ineligible for the loan and, if a loan has already been made shall constitute a loan default for which the remaining balance of the loan shall become immediately due and payable.

§ 1436.16 Foreclosure, liquidation, assumptions, sale or conveyance, bankruptcy.

(a) The collateral or land securing a loan may be sold by CCC whenever CCC has declared the entire indebtedness immediately due and payable under this part as follows:

(1) If a demand for payment is not received by the due date acceptable to CCC, CCC may call the loan and initiate foreclosure proceedings by issuing a liquidation letter to the borrower.

(2) The debtor may voluntarily agree to allow removal of the collateral to facilitate sale by signing an agreement for sale. If the debtor objects to removal of collateral, the law of the state where the collateral exists will be used to foreclose on the property.

(3) For loans with movable collateral and no real estate lien, CCC may sell the collateral for the best price obtainable. Sales proceeds shall be distributed in the following order:

(i) To CCC to satisfy the debtor's indebtedness including all costs associated with selling the collateral.

(ii) Payment to junior lien holders if approved by USDA's Office of the General Counsel and then to the borrower or other persons as determined appropriate by that office.

(4) For loans with nonmovable collateral, as determined by CCC, and no real estate lien, CCC may establish a claim according to 7 CFR part 1403.

(5) For loans secured with a real estate lien, CCC may obtain an appraisal of the property. Sales proceeds shall be distributed in the following order:

(i) To CCC to satisfy the debtor's indebtedness including all costs associated with selling the collateral and the appraisal.

(ii) To junior lien holders if approved by USDA's Office of the General Counsel; or

(iii) To the borrower or other persons as determined appropriate by that office.

(b) Assumption by another borrower of a farm storage facility loan is permitted subject to county committee approval and the subsequent borrower's ability to show a satisfactory credit history. An assumption of the loan may be approved when the collateral is sold by CCC to an otherwise eligible borrower, the current borrower will convey the collateral or property securing the loan to another eligible borrower, or the borrower is dead, incompetent, or missing and an eligible borrower wants to assume the loan.

(1) Requests for approval of assumptions shall be made to the county committee by the borrower, the borrower's successors, or representatives of the borrower. If approval is granted, the borrower's successors or representatives shall execute a new farm storage facility note and security agreement for the balance of the term of the loan.

(2) The principal amount of the loan shall include the unpaid amount of the loan, interest computed to the date of assumption, all past due installments, and any other charges that may be required.

(c) The borrower may voluntarily convey the collateral to CCC before repaying the loan. Before a borrower sells or conveys the facilities or other property securing a loan without repaying the loan in full, the borrower shall obtain approval for the sale or conveyance from the FSA county committee with the understanding that sale proceeds shall be paid to satisfy the borrowers indebtedness to CCC.

(d) Remedies provided for in this section shall, unless CCC determines otherwise, be subject to the administrative appeals provided for elsewhere in this part, including those that are found at § 1436.13.

§ 1436.17 Environmental compliance.

(a) Except as otherwise specified in this section, prior to approval of any farm storage facility loan, an environmental evaluation will be completed to determine if the proposed action will have any adverse impacts on the environment and cultural resources.

(b) If it is determined that a proposed action or group of proposed actions will not result in any adverse impact, the action will be considered as being categorically excluded for the purpose of compliance with the National Environmental Policy Act (NEPA), 40 CFR parts 1500–1508.

(c)(1) If adverse environmental impacts (either direct or indirect) are identified, an environmental assessment will be completed in accordance with the Council on Environmental Quality's Regulations for Implementing the Procedural Provisions of NEPA.

(2) The environmental assessment will be used to develop an action that results in no significant environmental impact on the human environment or cultural resources.

(3) No action will be approved that has been determined to have significant impacts on the human environment or cultural resources.

(d)(1) In order to minimize the exposure to environmental liabilities from the presence of contamination on real estate collateral, an evaluation will be made of the economic and environmental risks to the real estate collateral posed by the presence of hazardous substances and petroleum products.

(2) If the evaluation made under paragraph (d)(1) of this section reveals that the collateral is or may be contaminated, then the applicant will be notified and given an option of offering as collateral other real estate that is free from contamination or remediating the contamination on the original site offered as collateral.

§ 1436.18 Appeals.

The appeal, reconsideration, or review of all determinations made under this part, except for provisions for which there are no appeal rights because they are determined rules of general applicability, must be in accordance with parts 11 and 780 of this title.

Signed at Washington, DC, on January 10, 2001.

George Arredondo,

Acting Executive Vice President, Commodity Credit Corporation.

[FR Doc. 01–1332 Filed 1–17–01; 8:45 am]

BILLING CODE 3410–05–P

DEPARTMENT OF ENERGY

10 CFR Part 719

48 CFR Parts 931 and 970

RIN 1990–AA27

Contractor Legal Management Requirements; Department of Energy Acquisition Regulation

AGENCY: Department of Energy.

ACTION: Notice of final rulemaking.

SUMMARY: The Department of Energy (Department) is establishing new regulations covering contractor legal management requirements. Conforming amendments are also made to the Department of Energy Acquisition Regulation (DEAR). The new regulation covers legal costs to be reimbursed by the Department to its contractors at government owned or leased facilities with contracts exceeding $100,000,000. An Appendix to the regulation provides additional guidance to contractors.

EFFECTIVE DATE: This final rule is effective February 20, 2001.

FOR FURTHER INFORMATION CONTACT: Laura Fullerton at (202) 586–3420 (Laura.Fullerton@hq.doe.gov) or Anne Broker at (202) 586–5060 (Anne.Broker@hq.doe.gov).

SUPPLEMENTARY INFORMATION:

I. Background.
II. Disposition of Comments.
III. Procedural Requirements.
A. Review Under Executive Order 12866.
B. Review Under Executive Order 12988.
C. Review Under the Regulatory Flexibility Act.
D. Review Under the Paperwork Reduction Act.
E. Review Under the National Environmental Policy Act.
F. Review Under Executive Order 13132.
G. Review Under the Unfunded Mandates Reform Act of 1995.
H. Review Under the Treasury and General Government Appropriations Act of 1999.
I. Congressional Notification.

I. Background

This final rulemaking creates a new part 719, in Chapter 10 of the Code of Federal Regulations, establishing regulations to monitor and control legal costs and to provide guidance to aid contractors and Department personnel in making determinations regarding the

reasonableness of all outside legal costs, including the costs of litigation. This action finalizes the Notice of Proposed Rulemaking (NOPR) published October 25, 2000 (65 FR 63809). Today's rules cover all outside legal costs incurred by contractors with contracts exceeding $100,000,000 at facilities owned or leased by the Department. The policies also apply to legal counsel retained by the Department itself for litigation or other legal services where the legal costs over the life of the matter for which counsel has been retained are expected to exceed $100,000.

The regulation requires submission of a legal management plan by contractors where costs for legal services are to be reimbursed by the Department. Once approved by the Department, the legal management plan, as well as applicable regulations and contract provisions, forms the basis for approvals by the Department to reimburse litigation and other legal expenses. The cost principles and contract clauses in the Department's contracts generally make legal costs, including the cost of litigation, allowable if reasonable and incurred in accordance with the applicable cost principles and contract clauses.

The Department received some comments expressing concern about the potential waiver of attorney-client confidentiality privileges if contractors provide the type of information required under this rulemaking. The Department needs to receive information regarding contractor litigation in order to participate in strategy and to justify the reimbursement of the costs of litigation. Although it is true that attorney-client privilege can be waived by a disclosure of an otherwise confidential disclosure to a third party, there is an exception to this principle. The privilege is not waived when the nominal ''third party'' has a common interest with the client as to the subject matter of the communication. In the cases involving our contractors, the Department is contractually obligated, with few exceptions, to pay the contractors' litigation costs, as well as any judgment or settlements. In order to determine whether the costs are allowable and reasonable the Department needs to review the invoices, as well as budgets and staffing and resource plans. In addition, the Insurance—Litigation and claims clause provides that the Department can direct the defense of such litigation and provides for the collaboration between Department representatives and in-house or Department approved outside counsel. In order to provide guidance, the Department needs to be provided pleadings and other documents that deal with the strategy of the case.

In July 2000, the common interest privilege was upheld by the Supreme Court of Washington [1] in a case involving information provided to the Department by one of its contractors. The privilege was also recognized in a decision by the U.S. District Court for the District of New Mexico [2] which determined that a Litigation Plan is a privileged document and not subject to production.

An Appendix to the regulation provides additional ''safe harbor'' guidance for legal management practices. The guidance provided in the Appendix may be updated from time to time by the Department and those updates distributed to contractors, contracting officers and Department counsel.

Conforming technical amendments to the Department of Energy's Acquisition Regulation (DEAR), at 48 CFR Chapter 9, appear at the end of this notice of final rulemaking. Some changes have been made in the approach for these amendments.[3]

The proposal to add a clause to DEAR Part 952 and prescriptive language in Part 928 has been eliminated. Instead, prescriptive language has been added as Department coverage for the cost principle at 48 CFR 931.205–19, requiring the use of Insurance—Litigation and claims, 970.5228–1 (new citation) [970.5204–31 old citation], for contracts exceeding an amount of $100,000,000 involving work performed at a Department owned or leased site. Additionally, the language in the 48 CFR Part 970 clause, Insurance—Litigation and claims, 970.5228–1 (new citation) [970.5204–31 old citation], has been modified to permit use of that clause in non-M&O contracts now covered by 48 CFR 931.205–19. These changes involve only the elimination of references to DEAR Part 970 specific clauses and a substitution of generalized clause titles instead.

Department coverage for the Federal Acquisition Regulation (FAR) cost principle at FAR 31.205–33, Professional and consultant service costs, is added at DEAR 931.205–33(g) and DEAR 970.3102–05–33(g), to describe the applicability of 10 CFR Part 719 to M&O contracts, and to non-M&O contracts for an amount exceeding $100,000,000 involving work performed at facilities owned or leased by the Department, and for legal counsel retained directly by the Department for litigation or other legal matters.

Additionally, the language originally proposed to be inserted at subpart 970.71 has been revised and added to the contractor purchasing guidance contained at 970.5244–1 (new citation) [970.5204–22 old citation].

Contracting officers must apply these DEAR changes to solicitations issued on or after the effective date of this rule. Contracting officers may, at their discretion, include these DEAR changes in solicitations issued before the effective date of this rule, provided award of the resulting contract(s) occurs on or after the effective date.

Contracting officers must apply these DEAR changes: to contracts extended in accordance with the Department's extend/compete policies and procedures (48 CFR 917.6, 48 CFR 970.1702–1(a), and internal guidance); and to options exercised under competitively awarded management and operating contracts (48 CFR 970.1702–1(b)).

For management and operating contracts or other contracts already containing subparagraph (d)(4) of the Allowable costs clause, 970.5204–13, or 970.5204–14, or other reference to the Department's litigation management procedures and cost guidelines, these changes and the new 10 CFR part 719 are automatically applicable. These provisions address the allowability of reasonable legal costs incurred by contractors and include references to the Department's ''approval of the contractors litigation management procedures (including cost guidelines)'' and also include the caveat that ''such procedures may be revised from time to time.''

II. Disposition of Comments

General Comments

Comment: One commenter stated that the proposed rule duplicates existing litigation management and legal cost reporting requirements established by the Final Policy Statement, which addressed contractor litigation cost policies, terms of law firm engagement, and allowability of costs (''Policy Statement''), 65 FR 14763, (April 3, 1996) and therefore is unnecessary.

Response: One of the purposes of this rulemaking is to codify the legal

[1] *Brundridge, et al.* v. *Fluor Daniel, Inc., Fluor Daniel Hanford, Inc., Daniel Northwest, Inc.,* No. 69732–9, Ruling Denying Review, (Sup. Ct. Wash., 7/27/00).

[2] *Morrison Knudsen Corp.* v. *Ground Improvement Techniques, Inc., and Fireman's Fund Insurance Co.,* Order Denying Motion to Compel Discovery From the Department of Energy, Misc. No. 96–37 MV/LFG (D.N.M., 10/8/96).

[3] **Note:** The Department republished 48 CFR (DEAR) subpart 970 in a final rulemaking in the **Federal Register** on December 22, 2000 (65 FR 80994). This rulemaking action streamlined and reorganized DEAR subpart 970 and both the new and old citations for DEAR subpart 970 are provided for the convenience of the reader.

management and cost policies described in the Policy Statement and related requirements from diverse sources and locations and to standardize those requirements. This regulation consolidates requirements from earlier contract reform initiatives and the Policy Statement and replaces those requirements. The commenter argues that the information collection in the proposed rule corresponds to the information collections in the Policy Statement and the Department agrees.

Comment: One commenter took issue with the Notice of Proposed Rulemaking's estimate of 15–30 hours to prepare a litigation management plan and stated that it expended estimated 150 hours reviewing, revising, and altering a litigation management plan and its office practices.

Response: The commenter did not explain how many of the 150 hours were used in the preparation of the legal management plan and how many were used reviewing its office practices. Also, the commenter did not state whether this time was expended for an initial legal management plan or for a plan and a series of revisions over a period of time. The NOPR's estimate of 15–30 hours for the initial preparation of a legal management plan was based on information provided by a contractor who had a litigation management plan in place. The Department expects that the time necessary to prepare and implement a legal management plan will vary from contractor to contractor, but does not expect that 150 hours for preparation of an initial plan will be the norm. Nevertheless, the Department notes that the time spent preparing the legal management plan is ordinarily an allowable cost that is paid for by the government.

Comment: The commenter noted that under its current practices with the Department that the retention agreement for, and then the billings and invoices for, any litigation must be submitted to the Department for prior approval. The commenter asked whether the $25,000 threshold pertaining to engagement letters would now replace their current practice.

Response: When the requirements contained in this regulation are incorporated into a contract, already existing guidance and requirements is canceled for that individual contract, unless specifically retained and made a part of the revised plan.

Comment: Two commenters stated that the goal of controlling legal costs should be addressed by agency guidance documents rather than in a mandatory regulation. The commenters argue that codifying the requirements in a regulation reduces the flexibility necessary for effective legal representation.

Response: The Department recognizes the concerns behind this view and has revised the regulation to provide more flexibility in the final rulemaking than provided in the NOPR. For example, in instances where the contractor does not know enough about the case at the time of filing an answer, the filing deadline for the staffing and resource plan is extended to 30 days after a determination that the costs of the matter are expected to exceed $100,000. Also, since there was concern that a contractor might be penalized for failing to determine whether a matter was significant for purposes of the staffing and resource plan, language has been added requiring the contractor to consult with Department counsel and an explanation that the primary purpose of the plan is informational. Finally, the requirement for advance approval of certain costs, in § 719.35, has been changed to permit submission of a justification after the incurrence of the cost.

Comment: Two commenters requested further explanation of the Department's reasons for including non-litigation matters in the rulemaking.

Response: It came to the Department's attention that there were instances where contractors incurred significant legal fees for matters not involving litigation. Given the Department's interest in assuring that appropriate cost controls are in place for all major legal representation and the interest Congress has in the expenditure of appropriated funds for legal fees, we decided it was prudent to include legal services for all matters expected to exceed $100,000.

Section 719.2 Definitions

Comment: One commenter suggested that the phrase ''administrative expenses associated with the provision of legal services by retained counsel'' could be ambiguous and proposed a revised definition for the term ''legal costs'' that excludes that phrase.

Response: The definition of ''costs'' contained at 48 CFR (FAR) 31.205–47, Costs related to legal and other proceedings, includes ''administrative and clerical expenses'' and the Department sees no reason to deviate from the FAR standard.

Section 719.3 What Contracts Are Covered by This Part?

Comment: One commenter observed that the Final Policy Statement applied to only management and operating contracts and requested an explanation for the Department's extension of the application of the regulation beyond the scope of the existing Policy Statement.

Response: The Final Policy Statement applied only to legal costs incurred by management and operating (M&O) contractors. Today's rule applies to all cost-reimbursement contracts in excess of $100,000,000 involving work performed at DOE facilities, including contracts that are not M&O contracts. The Department has experienced resistance against application of the Policy Statement in a number of non-M&O contracts that involve facility and site management responsibilities where the litigation management and cost policies need to be applied. The legal management plan has been expanded beyond DEAR part 970, which contains the M&O contract provisions, to make it clear that this requirement applies to some non-M&O type contracts.

Section 719.6(a) Are There Any Types of Legal Matters Not Included in the Coverage of This Part?

Comment: Seven commenters recommended against extending the coverage of the legal management requirements to matters handled by insurance carriers providing third party administrator (TPA) services or retrospective policies, as provided in § 719.6(a) of the NOPR. Some of the commenters noted that the purpose of using TPA services is to purchase the expertise and administrative capabilities of insurance companies and that part of the expertise package provided by the insurance carrier is the retention, oversight and direction of an outside law firm with specialized experience and contacts. They also noted that one of the benefits is reduced legal fees because of business volume and the ongoing relationship between the insurance carrier and law firm.

Response: The comments provided insight and experience and are persuasive. Proposed § 719.6 has been revised by deleting the references to matters handled by insurance carriers providing third party administrator and retrospective policy services and by inserting a new subparagraph (c) that excludes routine workers compensation matters.

Section 719.10 What Information Must Be Included in the Legal Management Plan?

Comment: One commenter stated an opinion that the information requirements in this section are too intrusive in the contractor's counsel selection process by dictating that the contractors abide by these criteria as a prerequisite for allowability of its legal counsel costs.

Response: The provisions of this section do not make any costs unallowable. The purpose of this section is to require the contractor to submit a legal management plan with its own individualized list of criteria. The regulation provides a list of criteria or factors that the contractor must consider prior to making its selection of retained legal counsel and that the Department must consider in determining if the costs are reasonable and allowable. No costs are made unallowable merely for failure to address all of the recommended criteria.

Section 719.14 Will the Department Notify the Contractor Concerning the Adequacy or Inadequacy of the Submitted Plan?

Comment: One commenter stated that it was unclear whether the term ''deficiencies'' as used in § 719.14(a) referred to failure to comply with a requirement in § 719.10 or an objection from the Department concerning the substance of the plan. The commenter noted also that the proposed regulation fails to specify a route for appeal or a remedy for a dispute concerning a deficiency.

Response: The term ''deficiencies'' in this section refers to the failure of the legal management plan to meet the mandatory requirements of § 719.10 and this clarification has been added to § 719.14(a). Section 719.14(b) has been revised to provide for a letter of appeal to the General Counsel disputing a deficiency determination.

Section 719.17 Are There Any Budgetary Requirements?

Comment: Four commenters expressed concern that prospective budgets would be entirely speculative and that requiring contractors to speculate on budget needs would set them up for criticism in the event the budgeted amount is exceeded. One of these commenters recommended clarifying that only ''known or existing matters'' are intended to be included in the prospective budget.

Response: The prospective budget requirement is intended to serve only as an information device for the Department and the contractor, so that both have a better understanding of the contractor's awareness of its legal staffing needs and the contractor's ability to estimate based on its experience. Clarifying language has been added in paragraph § 719.17(a) that the annual budget requirement covers only pending matters, and in § 719.17(c) to state that the purpose of the budget requirement is primarily informational and that the Department recognizes that there will be departures from the budget beyond the control of the contractor.

Comment: One commenter stated that the budget requirements of § 719.17(b) duplicate the staffing and resource plan requirements of § 719.16.

Response: No budgetary information is required in § 719.16. As defined in § 719.2, staffing and resource plan means a statement prepared by retained legal counsel describing plans for managing a significant matter. The budget described in § 719.17 is prepared by the contractor.

Section 719.20 When Must an Engagement Letter Be Used?

Comment: One commenter sought clarification whether the term ''matters'' meant particular, individual matters or all matters handled by an individual law firm.

Response: Section 719.20 has been modified by adding the phrase ''for a particular matter'' to make clear that as used in this section, the term ''matter'' refers to particular, individual matters handled by a law firm and not to a cumulative amount of matters handled by a particular firm.

Section 719.21 What Are the Required Elements of an Engagement Letter?

Comment: One commenter recommended a modification to allow both retained legal counsel and contractor counsel the flexibility to communicate material concerning the case in a manner that serves the Department's needs without creating risk of waiving any attorney-client confidentiality privilege.

Response: Section 719.21(b)(2) has been modified by adding language that an exemption for specific records may be obtained where contractors can demonstrate that a particular situation may provide grounds for a waiver. This change is intended to make clear that in instances when the contractor has demonstrated that production of specific documents may provide grounds for waiver of the attorney-client privilege, that material may be withheld.

Section 719.31 How Does the Department Determine Whether Fees Are Reasonable?

Comment: One commenter inquired whether the phrase ''lowest reasonably achievable fees or rates'' as used in 719.31(a) is intended to include consideration of the terms of engagement, § 719.21, and reimbursement guidance, subpart D, in the proposed rule.

Response: The phrase ''lowest reasonably achievable fees or rates'' is to be applied with due consideration for the individual circumstances of each situation, including the overall terms of engagement between the contractor and retained legal counsel, and the guidance found throughout part 719.

Comment: Another commenter asked how the Department will treat legal services obtained by a contractor which do not meet all the criteria in § 719.31 and whether the Department will pay at the rate it deems reasonable and allow the contractor to pay the difference if the contractor elects to use an attorney whose rates are determined to not be the lowest price available.

Response: The Department anticipates that there will be circumstances which do not meet all the criteria in this section. The Department will reimburse the amount that it determines to be allowable and reasonable. It is not the intent of this regulation to select legal representation for contractors, to limit the choice of legal representation available to the contractor, or prevent the contractor from engaging any particular attorney or firm. The purpose of this regulation is to outline the Department's approach to evaluating the reasonableness of costs associated with legal representation for purposes of determining legal cost reimbursement. Contractors may elect to deviate from the regulation but they run the substantial risk that the Department will determine costs that do not conform to the regulation to be unreasonable. Contractors are responsible alone for costs that are deemed unreasonable under part 719. This approach allows the contractor, for example, to pay the difference if the contractor wishes to retain the services of an attorney whose fees are higher than that deemed reasonable under part 719.

Section 719.35 What Categories of Costs Require Advance Approval?

Comment: Five commenters objected to requiring advance approval from Department counsel for attendance by more than one person at a deposition, court hearing, interview or meeting. One of these commenters also enquired whether this requirement is meant to include impromptu meetings or routine meetings between partners and associates. Two of these commenters also noted that quick turn around times often occur with litigation and recommended more flexibility in the system, such as a presumption of approval after a certain waiting time, exception process or pre-approval mechanism.

Response: These concerns have been addressed by adding language to § 719.35 to permit the contractor to

submit a justification following the incurrence of the cost. The Department has not changed the language in § 719.35(d) covering attendance by more than one person at a deposition, court hearing, interview or meeting. If the contractor decides to have more than one person attend a meeting, justification for attendance of more than one person may be provided following the incurrence of that cost. This is the procedure the contractor should follow for impromptu and routine meetings.

Comment: Two commenters stated that the proposed requirement for advance approval for costs for items listed in this section creates cost allowability rules which are not consistent with current FAR cost allowability rules since the Federal Acquisition Regulation (FAR) does not contain specific advance approval requirements.

Response: This section of the final rule effectively puts contractors on advance notice that the contractors must demonstrate the reasonableness of certain listed costs. Contracting officers can require the contractor to demonstrate the reasonableness of a cost by questioning the cost. The Federal Acquisition Regulation already states, at 48 CFR (FAR) 31.201–3, that no presumption of reasonableness is attached to the incurrence of costs by a contractor. In accordance with 48 CFR (FAR) 31.201–3, the contracting officer shifts the burden of proof to the contractor when the reasonableness of the cost is questioned. Section 719.35 automatically invokes this process for the listed costs.

Section 719.37 Are There Any Special Procedures or Requirements Regarding Subcontractor Legal Costs?

Comment: One commenter viewed § 719.37(b) as subjecting subcontractors to the same set of requirements imposed on prime contractors while two commenters stated that this proposal is unworkable and unmanageable.

Response: The Department agrees that, as proposed, this section could be read in a manner that would make it somewhat unworkable and this section has been revised to require the contractor submit to Department counsel information copies of subcontractor invoices for legal services.

Section 719.39 What Happens When More Than One Contractor Is a Party to a Matter?

Comment: Two commenters stated that it is unreasonable to expect contractors and their retained legal counsel to waive ethical conflict issues which are created by the lead lawyer requirement.

Response: The Department has already provided for exceptions for situations where an ethical conflict arises, including an exception for situations where there are conflicts with the standards of professional conduct (§ 719.39(a)), and an opportunity for the contractor to demonstrate the reasonableness of its decision (§ 719.39(b)).

Comment: Another commenter recommended the section be modified to give Department counsel the authority to approve joint or lead counsel recommended by the parties and to designate directly only in those situations where recommended counsel is unacceptable or the contractors cannot agree on a choice.

Response: It is not the intent of the regulation to circumscribe the contractors' choice of counsel but to eliminate duplicative billings for identical legal services, particularly where the issues involved are similar for the contractors involved. The language in this section has been modified to permit contractors to propose their preference for the attorney or law firm to serve as lead counsel.

Comment: Two of the commenters interpreted this provision as making expressly unallowable legal costs incurred by a contractor who hires different counsel than the designated lead counsel.

Response: As stated earlier in this rulemaking, every situation will be reviewed on an individual basis. Reasonable costs will be reimbursed where the contractor can demonstrate the reasonableness of its decision to engage additional counsel based on contractor interests that diverge from those represented by lead counsel.

III. Procedural Requirements

A. Review Under Executive Order 12866

Today's regulatory action has been determined not to be a ''significant regulatory action'' under Executive Order 12866, ''Regulatory Planning and Review,'' (58 FR 51735, October 4, 1993). Accordingly, this final rule was not subject to review under that Executive Order by the Office of Information and Regulatory Affairs of the Office of Management and Budget (OMB).

B. Review Under Executive Order 12988

With respect to the review of existing regulations and the promulgation of new regulations, section 3(a) of Executive Order 12988, ''Civil Justice Reform,'' 61 FR 4729 (February 7, 1996), imposes on Executive agencies the general duty to adhere to the following requirements: (1) Eliminate drafting errors and ambiguity; (2) write regulations to minimize litigation; (3) provide a clear legal standard for affected conduct rather than a general standard; and (4) promote simplification and burden reduction. With regard to the review required by section 3(a), section 3(b) of Executive Order 12988 specifically requires that Executive agencies make every reasonable effort to ensure that the regulation: (1) clearly specifies the preemptive effect, if any; (2) clearly specifies any effect on existing Federal law or regulation; (3) provides a clear legal standard for affected conduct while promoting simplification and burden reduction; (4) specifies the retroactive effect, if any; (5) adequately defines key terms; and (6) addresses other important issues affecting clarity and general draftsmanship under any guidelines issued by the Attorney General. Section 3(c) of Executive Order 12988 requires Executive agencies to review regulations in light of applicable standards in section 3(a) and section 3(b) to determine whether they are met or it is unreasonable to meet one or more of them. The Department has completed the required review and determined that, to the extent permitted by law, the regulations meet the relevant standards of Executive Order 12988.

C. Review Under the Regulatory Flexibility Act

The Regulatory Flexibility Act, 5 U.S.C. 601, *et seq.*, requires that a federal agency prepare a regulatory flexibility analysis for any rule for which the agency is required to publish a general notice of proposed rulemaking. Such an analysis is not required, however, if the agency certifies that the rule would not, if promulgated, have a significant economic impact on a substantial number of small entities (5 U.S.C. 605(b)).

The Department certifies that today's final rule creating a new part 10 CFR part 719 does not have a significant economic impact on a substantial number of small entities. This rule only restates and clarifies the Department's restrictions on the reimbursement of contractor legal costs. The rule affects only potential claims for reimbursement of costs. The rule does not directly regulate small entities.

D. Review Under the Paperwork Reduction Act

The final rule requires each covered contractor to submit a legal management

plan that describes the contractor's practices for managing legal costs and matters for which it procures the services of retained legal counsel. This collection of information is required for the Department to determine whether to approve reimbursement of contractors' litigation and other legal expenses.

The Department submitted to the Office of Management and Budget (OMB) this collection of information for review and approval under the Paperwork Reduction Act, 44 U.S.C. 3501 *et seq.* The Office of Management and Budget has not yet approved the collection of information in this rule. An agency may not conduct or sponsor, and a person is not required to respond to, a collection of information unless the collection has been reviewed and assigned a control number by OMB.

E. Review Under the National Environmental Policy Act

The Department has concluded that promulgation of this final rule falls into a class of actions which would not individually or cumulatively have significant impact on the human environment, as determined by Department of Energy regulations (10 CFR part 1021, subpart D) implementing the National Environmental Policy Act (NEPA) of 1969 (42 U.S.C. 4321 *et seq.*). Specifically, this final rule is categorically excluded from NEPA review because the amendments to the DEAR would be strictly procedural (categorical exclusion A6). Therefore, this final rule does not require an environmental impact statement or environmental assessment pursuant to NEPA.

F. Review Under Executive Order 13132

Executive Order 13132 (64 FR 43255, August 10, 1999) requires agencies to develop an accountable process to ensure meaningful and timely input by State and local officials in the development of regulatory policies that have ''federalism implications.'' As defined in the Executive Order, policies that have federalism implications include regulations that have substantial direct effects on the States, on the relationship between the national government and the States, or on the distribution of power and responsibilities among the various levels of government. The Department has examined this final rule and has determined that it would not have a substantial direct effect on the States, on the relationship between the national government and the States, or on the distribution of power and responsibilities among the various levels of government. No further action is required by Executive Order 13132.

G. Review Under the Unfunded Mandates Reform Act of 1995

The Unfunded Mandates Reform Act of 1995 (Pub. L. 104–4) generally requires a Federal agency to perform a detailed assessment of costs and benefits of any rule imposing a Federal Mandate with costs to State, local or tribal governments, or to the private sector, of $100 million or more. This rulemaking affects private sector entities, and the impact is less than $100 million.

H. Review Under the Treasury and General Government Appropriations Act, 1999

Section 654 of the Treasury and General Government Appropriations Act, 1999 (Pub.L 105–277) requires federal agencies to issue a Family Policymaking Assessment for any proposed rule or policy that may affect family well-being. Today's rule does not impact on the autonomy or integrity of the family institution. Accordingly, the Department has concluded that it is not necessary to prepare a Family Policymaking Statement.

I. Congressional Notification

As required by 5 U.S.C. 801, the Department will report to Congress promulgation of this final rule prior to its effective date. The report will state that it has been determined that the rule is not a ''major rule'' as defined by 5 U.S.C. 804(2).

List of Subjects

10 CFR Part 719

Government contracts, Legal services, Reportintg and recordkeeping requirements.

48 CFR Parts 931 and 970

Government procurement.

Issued in Washington, DC on January 3, 2001.

T.J. Glauthier,

Deputy Secretary, Department of Energy.

For the reasons set out in the preamble, Chapter III of title10 and Chapter 9 of title 48 of the Code of Federal Regulations is amended as set forth below:

1. 10 CFR Part 719 is added to read as follows:

PART 719—CONTRACTOR LEGAL MANAGEMENT REQUIREMENTS

Subpart A—General Provisions

719.1 What is the purpose of this part?
719.2 What are the definitions of terms used in this part?
719.3 What contracts are covered by this part?
719.4 Are law firms that are retained by the Department covered by this part?
719.5 What contracts are not covered by this part?
719.6 Are there any types of legal matters not included in the coverage of this part?
719.7 Is there a procedure for exceptions or deviations from this part?

Subpart B—Legal Management Plan

719.10 What information must be included in the legal management plan?
719.11 Who must submit a legal management plan?
719.12 When must the plan be submitted?
719.13 Who at the Department must receive and review the plan?
719.14 Will the Department notify the contractor concerning the adequacy or inadequacy of the submitted plan?
719.15 What are the requirements for a staffing and resource plan?
719.16 When must the staffing and resource plan be submitted?
719.17 Are there any budgetary requirements?

Subpart C—Engagement Letter

719.20 When must an engagement letter be used?
719.21 What are the required elements of an engagement letter?

Subpart D—Reimbursement of Costs Subject to This Part

719.30 Is there a standard for determining cost reasonableness?
719.31 How does the Department determine whether fees are reasonable?
719.32 For what costs is the contractor, or Department retained counsel, limited to reimbursement of actual costs only?
719.33 What categories of costs are unallowable?
719.34 What is the treatment for travel costs?
719.35 What categories of costs require advance approval?
719.36 Who at the Department must give advance approval?
719.37 Are there any special procedures or requirements regarding subcontractor legal costs?
719.38 Are costs covered by this part subject to audit?
719.39 What happens when more than one contractor is a party to the matter?

Subpart E—Department Counsel Requirements

719.40 What is the role of Department counsel as a contracting officer's representative?
719.41 What information must be forwarded to the General Counsel's Office concerning contractor submissions to Department counsel under this part?
719.42 What types of field actions must be coordinated with Headquarters?
Appendix to Part 719—Guidance for Legal Resource Management

Authority: 42 U.S.C. 2201, 5814, 5815 and 7101, *et seq.*; 50 U.S.C. 2401, *et seq.*

Subpart A—General Provisions

§ 719.1 What is the purpose of this part?

This part is intended to facilitate control of Department and contractor legal costs, including litigation costs. The contractor is required to develop a procedure for retaining legal counsel, and to document the analysis used to decide when, where and who will be engaged as outside counsel and the terms of the engagement. Payment of law firm invoices and reimbursement of contractor legal costs under covered contracts is subject to compliance with this part.

§ 719.2 What are the definitions of terms used in this part?

For purposes of this part:

Alternative dispute resolution includes processes such as mediation, neutral evaluation, mini-trials and arbitration.

Contractor means any person or entity with whom the Department contracts for the acquisition of goods or services.

Covered contracts means those contracts described in § 719.3.

Department means the Department of Energy, including the National Nuclear Security Administration.

Department counsel means the individual in the field office, or Headquarter's office, designated as the contracting officer's representative and point of contact for a contractor or Department retained legal counsel, for purposes of this part only, for submission and approval of the legal management plan, advance approval of certain costs, and submission of a staffing and resource plan, as addressed in this part.

Legal costs include, but are not limited to, administrative expenses associated with the provision of legal services by retained legal counsel; the costs of legal services provided by retained legal counsel; the costs of the services of accountants, consultants, or others retained by the contractor or by retained legal counsel to assist retained legal counsel; and any similar costs incurred by or in connection with the services of retained legal counsel.

Legal management plan means a statement describing the contractor's practices for managing legal costs and matters for which it procures the services of retained legal counsel.

Retained legal counsel means members of the bar working in the private sector, either individually or in law firms, who are retained by a contractor or the Department to provide legal services.

Significant matters means legal matters, including litigation, involving significant issues as determined by Department counsel, and any legal matter where the amount of any legal costs, over the life of the matter, is expected to exceed $100,000.

Staffing and resource plan means a statement prepared by retained legal counsel describing plans for managing a significant matter.

§ 719.3 What contracts are covered by this part?

(a) This part covers cost reimbursement contracts:

(1) For an amount exceeding $100,000,000, and

(2) Involving work performed at the facilities owned or leased by the Department.

(b) This part covers contracts otherwise not covered by paragraph 3(a) of this section containing a specialized clause requiring compliance with this part.

(c) This part also covers Department contracts with retained legal counsel where the legal costs are expected to exceed $100,000.

§ 719.4 Are law firms that are retained by the Department covered by this part?

Retained legal counsel under fixed rate or other type of contract with the Department itself to provide legal services must comply with the following where the legal costs over the life of the matter for which counsel has been retained are expected to exceed $100,000:

(a) Requirements related to staffing and resource plans in subpart B of this part,

(b) Engagement letter requirements if legal work is contracted out, and

(c) Cost guidelines in subpart D of this part.

§ 719.5 What contracts are not covered by this part?

This part does not cover:

(a) Fixed price contracts;

(b) Cost reimbursement contracts for an amount less than $100,000,000; or

(c) Contracts for an amount exceeding $100,000,000 involving work not performed at a government owned or leased site.

§ 719.6 Are there any types of legal matters not included in the coverage of this part?

Matters not covered by this part include:

(a) Matters handled by counsel retained by an insurance carrier;

(b) Routine intellectual property law support services;

(c) Routine workers and unemployment compensation matters and labor arbitrations; and

(d) Routine matters handled by counsel retained through a GSA supply schedule.

§ 719.7 Is there a procedure for exceptions or deviations from this part?

(a) Requests for exceptions or deviations from this part by contractors must be made in writing to Department counsel and approved by the General Counsel. If an alternate procedure is proposed for compliance with an individual requirement in this part, that procedure must be included in the written request by the contractor.

(b) The General Counsel may authorize exceptions based on a recommendation of Department counsel. The General Counsel may also establish exceptions to this part based on current field office and contractor practices which satisfy the purpose of these requirements.

(c) Exceptions to this part which are also a deviation from the cost principles (see subpart D of this part) must be approved by the Procurement Executive. See 48 CFR (FAR) 31.101. Written requests from contractors for a deviation to a cost principle must be submitted to the contracting officer, with a copy provided to Department counsel.

Subpart B—Legal Management Plan

§ 719.10 What information must be included in the legal management plan?

The legal management plan must include the following items:

(a) A description of the legal matters that may necessitate handling by retained legal counsel.

(b) A discussion of the factors the contractor must consider in determining whether to handle a particular matter utilizing retained legal counsel.

(c) An outline of the factors the contractor must consider in selecting retained legal counsel, including:

(1) Competition;

(2) Past performance and proficiency shown by previously retained counsel;

(3) Particular expertise in a specific area of the law;

(4) Familiarity with the Department's activity at the particular site and the prevalent issues associated with facility history and current operations;

(5) Location of retained legal counsel relative to:

(i) The site involved in the matter,

(ii) Any forum in which the matter will be processed, and

(iii) Where a significant portion of the work will be performed;

(6) Experience as an advocate in alternative dispute resolution procedures such as mediation;

(7) Actual or potential conflicts of interest; and

(8) The means and rate of compensation (*e.g.,* hourly billing, fixed fee, blended fees, etc.).

(d) A description of:

(1) The system that the contractor will use to review each case to determine whether and when alternative dispute resolution is appropriate;

(2) The role of in house counsel in cost management;

(3) The contractor's process for review and approval of invoices from outside law firms or consultants;

(4) The contractor's strategy for interaction with, and supervision of, retained legal counsel;

(5) How appropriate interaction with the contracting officer and Department counsel will be ensured; and,

(6) The contractor's corporate approach to legal decision making.

§ 719.11 Who must submit a legal management plan?

Contractors identified under paragraphs (a) and (b) in § 719.3 must submit a legal management plan.

§ 719.12 When must the plan be submitted?

Contractors identified under paragraphs (a) and (b) in § 719.3 must submit a legal management plan within 60 days following the execution of a contract with the Department.

§ 719.13 Who at the Department must receive and review the plan?

The contractors identified under paragraphs (a) and (b) in § 719.3 must file a legal management plan with Department counsel.

§ 719.14 Will the Department notify the contractor concerning the adequacy or inadequacy of the submitted plan?

(a) The Department will notify the contractor within 30 days of the contractor's submission of the plan of any deficiencies relating to requirements in § 719.10.

(b) The contractor must either correct identified deficiencies within 30 days of notice of the deficiency or file a letter with the General Counsel disputing the determination of a deficiency.

§ 719.15 What are the requirements for a staffing and resource plan?

(a) For significant matters, the contractor must require retained legal counsel providing legal services to prepare a staffing and resource plan as provided in this section. The contractor must then forward the staffing and resource plan to Department counsel. Department retained counsel subject to this part must prepare a staffing and resource plan and forward it to Department counsel.

(b) A staffing and resource plan is a plan describing:

(1) Major phases likely to be involved in the handling of the matter;

(2) Timing and sequence of such phases;

(3) Projected cost for each phase of the representation; and

(4) Numbers and mix of resources, when applicable, that the retained legal counsel intends to devote to the representation.

(c) For significant matters in litigation, in addition to the generalized annual budget required by § 719.17 a staffing and resource plan must include a budget, broken down by phases, including at a minimum:

(1) Matter assessment, development and administration;

(2) Pretrial pleadings and motions;

(3) Discovery;

(4) Trial preparation and trial; and

(5) Appeal.

§ 719.16 When must the staffing and resource plan be submitted?

(a) For significant matters in litigation, the contractor or Department retained counsel must submit the staffing and resource within 30 days after the filing of an answer or a dispositive motion in lieu of an answer, or 30 days after a determination that the cost is expected to exceed $100,000.

(b) For significant legal services matters, the contractor or Department retained counsel must submit the staffing and resource plan within 30 days following execution of an engagement letter.

(c) Contractors and Department retained counsel must submit updates to staffing and resource plans annually or sooner if significant changes occur in the matter.

(d) When it is unclear whether a matter is significant, the contractor must consult with Department counsel on the question.

(e) The purpose of the staffing and resource plan is primarily informational, but Department counsel may state objections within 30 days of the submission of a staffing and resource plan. When an objection is stated, the contractor has 30 days to satisfy the objection or dispute the objection in a letter to the General Counsel.

§ 719.17 Are there any budgetary requirements?

(a) Contractors required to submit a legal management plan must also submit an annual legal budget covering then pending matters to Department counsel.

(b) The annual legal budget must include cost projections for known or existing matters for which reimbursable legal costs are expected to exceed $100,000, at a level of detail reflective of the types of billable activities and the stage of each such matter.

(c) For informational purposes for both the contractor and Department counsel, the contractor must report on its success on staying within budget at the conclusion of the period covered by each annual legal budget. The Department recognizes, however, that there will be departures from the annual budget beyond the control of the contractor.

Subpart C—Engagement Letters

§ 719.20 When must an engagement letter be used?

Contractors must submit an engagement letter to retained legal counsel expected to provide $25,000 or more in legal services for a particular matter and submit a copy of correspondence relating to § 719.21, including correspondence from retained legal counsel addressing any of the issues under § 719.21, to Department counsel.

§ 719.21 What are the required elements of an engagement letter?

(a) The engagement letter must require retained legal counsel to assist the contractor in complying with this part and any supplemental guidance distributed under this part.

(b) At a minimum, the engagement letter must include the following:

(1) A process for review and documented approval of all billing by a contractor representative, including the timing and scope of billing reviews.

(2) A statement that provision of records to the Government is not intended to constitute a waiver of any applicable legal privilege, protection, or immunity with respect to disclosure of these records to third parties. (An exemption for specific records may be obtained where contractors can demonstrate that a particular situation may provide grounds for a waiver.)

(3) A requirement that the contractor, the Department, and the General Accounting Office, have the right upon request, at reasonable times and locations, to inspect, copy, and audit all records documenting billable fees and costs.

(4) A statement that all records must be retained for a period of three (3) years after the final payment.

(c) The contractor must obtain the following information from retained counsel:

(1) Identification of all attorneys and staff who are assigned to the matter and

the rate and basis of their compensation (i.e., hourly rates, fixed fees, contingency arrangement) and a process for obtaining approval of temporary adjustments in staffing levels or identified attorneys.

(2) An initial assessment of the matter, along with a commitment to provide updates as necessary.

(3) A description of billing procedures, including frequency of billing and billing statement format.

(d) The contractor must obtain retained counsel's agreement to the following:

(1) That in significant matters a staffing and resource plan for the conduct of the matter must be submitted by the retained legal counsel to the contractor in accordance with the requirements of §§ 719.15 and 719.16.

(2) That alternative dispute resolution must be considered at as early a stage as possible where litigation is involved.

(3) That retained counsel must comply with the cost guidelines in subpart D of this part.

(4) That retained counsel must provide a certification concerning the costs submitted for reimbursement that is consistent with the certification in the Attachment to Appendix A to this part.

(5) That professional conflicts of interest issues must be identified and addressed promptly.

(e) Additional requirements may be included in an engagement letter based on the needs of the contractor or the office requiring the Department retained counsel.

Subpart D—Reimbursement of Costs Subject to This Part

§ 719.30 Is there a standard for determining cost reasonableness?

The standard for cost reasonableness determinations, one of the criteria for an allowability determination, is contained in the Federal Acquisition Regulation (FAR), at 48 CFR 31.201–3.

§ 719.31 How does the Department determine whether fees are reasonable?

In determining whether fees or rates charged by retained legal counsel are reasonable, the Department may consider:

(a) Whether the lowest reasonably achievable fees or rates (including any currently available or negotiable discounts) were obtained from retained legal counsel;

(b) Whether lower rates from other firms providing comparable services were available;

(c) Whether alternative rate structures such as flat, contingent, and other innovative proposals, were considered;

(d) The complexity of the legal matter and the expertise of the law firm in this area; and

(e) The factors listed in § 719.10(c).

§ 719.32 For what costs is the contractor, or Department retained counsel, limited to reimbursement of actual costs only?

All costs determined to be allowable are reimbursable for actual costs only, with no overhead or surcharge adjustments.

§ 719.33 What categories of costs are unallowable?

(a) Specific categories of unallowable costs are contained in the cost principles at 48 CFR (FAR) part 31 and 48 CFR (DEAR) part 931 and 970.31. See also 41 U.S.C. 256(e).

(b) The Department does not consider for reimbursement any costs incurred for entertainment or alcoholic beverages. See 48 CFR (FAR) 31.205–14 and 31.205–51 and 41 U.S.C. 256(e).

(c) Costs that are customarily or already included in billed hourly rates are not separately reimbursable.

(d) Interest charges that a contractor incurs on any outstanding (unpaid) bills from retained legal counsel are not reimbursable.

§ 719.34 What is the treatment for travel costs?

Travel and related expenses must at a minimum comply with the restrictions set forth in 48 CFR (FAR) 31.205–46, or 48 CFR (DEAR) 970.3102–05–46, as appropriate, to be reimbursable.

§ 719.35 What categories of costs require advance approval?

Costs for the following require specific justification or advance written approval from Department counsel to be considered for reimbursement:

(a) Computers or general application software, or non-routine computerized databases specifically created for a particular matter;

(b) Charges for materials or non-attorney services exceeding $5,000;

(c) Secretarial and support services, word processing, or temporary support personnel;

(d) Attendance by more than one person at a deposition, court hearing, interview or meeting;

(e) Expert witnesses and consultants;

(f) Trade publications, books, treatises, background materials, and other similar documents;

(g) Professional or educational seminars and conferences;

(h) Preparation of bills or time spent responding to questions about bills from either the Department or the contractor;

(i) Food and beverages when the attorney or consultant is not on travel status and away from the home office; and

(j) Pro hac vice admissions.

§ 719.36 Who at the Department must give advance approval?

If advance approval is required under this part, the advance approval must be obtained from the Department counsel unless the Department counsel indicates that approval of a request may only be given by the contracting officer.

§ 719.37 Are there any special procedures or requirements regarding subcontractor legal costs?

(a) The contractor must have a monitoring system for subcontractor legal matters likely to reach $100,000 over the life of the matter. The purpose of this system is to enable the contractor to perform the same type of analysis and review of subcontractor legal management practices that the Department can perform of the contractor's legal management practices. The monitoring is intended to enable the contractor to keep the Department informed about significant subcontractor legal matters, including significant matters in litigation. The burden is on the prime contractor to be responsive to questions raised by the Department concerning significant subcontractor legal matters.

(b) Contractors must submit information copies of subcontractor invoices for legal services to Department counsel.

§ 719.38 Are costs covered by this part subject to audit?

All costs covered by this part are subject to audit by the Department, its designated representative or the General Accounting Office. See § 719.21.

§ 719.39 What happens when more than one contractor is a party to a matter?

(a) If more than one contractor is a party in a particular matter and the issues involved are similar for all the contractors, a single legal counsel designated by the General Counsel must either represent all of the contractors or serve as lead counsel, when the rights of the contractors and the government can be effectively represented by a single legal counsel, consistent with the standards for professional conduct applicable in the particular matter. Contractors may propose to the General Counsel their preference for the individual or law firm to perform as the lead counsel for a particular matter.

(b) If a contractor, having been afforded an opportunity to present its views concerning joint or lead representation, does not acquiesce in the designation of one retained legal

counsel to represent a number of contractors, or serve as lead counsel, then the legal costs of such contractor are not reimbursable by the Department, unless the contractor persuasively shows that it was reasonable for the contractor to incur such expenses.

Subpart E—Department Counsel Requirements

§ 719.40 What is the role of Department counsel as a contracting officer's representative?

(a) The individual selected as Department counsel for a contract subject to the requirements of this part must be approved by the contracting officer and the appropriate Chief Counsel, or General Counsel if at Headquarters. The Department counsel must receive written delegated authority from the contracting officer to serve as the contracting officer's representative for legal matters. The contractor must receive a copy of this delegation of authority.

(b) Actions by Department counsel may not exceed the responsibilities and limitations as delegated by the contracting officer. Delegated contracting officer representative authority may not be construed to include the authority to execute or to agree to any modification of the contract nor to attempt to resolve any contract dispute concerning a question of fact arising under the contract.

§ 719.41 What information must be forwarded to the General Counsel's Office concerning contractor submissions to Department counsel under this part?

Department counsel must submit through the General Counsel reporting system, the approved costs and status updates for all matters involving retained counsel, including but not limited to contractor litigation. The reports are to be received by the 15th day of the month following the end of each quarter of the fiscal year.

§ 719.42 What types of field actions must be coordinated with Headquarters?

(a) Requests from contractors for exception from this entire part must be coordinated with Headquarters.

(b) Requests from contractors for approval to initiate or defend litigation, or to appeal from adverse decisions, where legal issues of first impression, sensitive issues, issues of significance to the Department nationwide or issues of broad applicability to the Government that might adversely impact its operations are involved must be coordinated by Department counsel with the Deputy General Counsel for Litigation or his/her designee.

(c) Department field counsel must inform the General Counsel of any significant matter, as defined in this part, and must coordinate any action involving a significant matter with the General Counsel, or his/her designee, as directed by the General Counsel or his/her designee.

Appendix to Part 719—Guidance for Legal Resource Management

Management and Administration of Outside Legal Services
1.0 Initiation of Litigation
2.0 Defense of Litigation
2.1 Disapproval of Defensive Litigation
3.0 Notice to the Department of Significant Matters and Litigation
4.0 Alternative Dispute Resolution
5.0 Cost Allowability Issues
5.1 Underlying Cause for Incurrence of Costs
5.2 Fees and Other Charges
6.0 Role of Department Counsel as the Contracting Officer's Representative
7.0 Future Amendments to Guidance
Attachment—Contractor Litigation and Legal Costs, Model Bill Certification and Format

Management and Administration of Outside Legal Services

This guidance is intended to assist contractors and the Department's contracting officers and counsel in managing the costs of outside legal services. This guidance is also intended to assist retained legal counsel who provide services to the Department or to the Department's contractors.

1.0 Initiation of Litigation

(A) The Insurance—Litigation and Claims clause (48 CFR (DEAR) 970.5228–1) in the Department's facility management contracts provides that the contractor may not initiate litigation, including appeals from adverse decisions, without the prior authorization or approval of Department counsel acting in his/her capacity as the Department's contracting officer representative. The following are the minimum informational requirements for requests for authorization or approval under that clause:

(1) Identification of the proposed parties;

(2) The nature of the proposed action;

(3) Relief sought;

(4) Venue;

(5) Proposed representation and reason for selection;

(6) An analysis of the issues and the likelihood of success, and any time limitation associated with the requested approval;

(7) The estimated costs associated with the proposed action, including whether outside counsel has agreed to a contingent fee arrangement;

(8) Whether, for any reason, the contractor will assume any part of the costs of the action;

(9) A description of any attempts to resolve the issues that would be the subject of the litigation, such as through mediation or other means of alternative dispute resolution; and

(10) A discussion of why initiating litigation would prove beneficial to the contractor and to the Government.

(B) Department counsel should advise the contracting officer concerning each request and must provide assistance to the contracting officer in communicating the Department's decision to the contractor.

2.0 Defense of Litigation

(A) In accordance with the Insurance-Litigation and Claims clause, the contractor must immediately notify Department counsel, acting in his/her capacity as contracting officer representative, of the initiation of litigation against the contractor. Department counsel will advise the contractor as to:

(1) Whether the defense of the litigation will be either approved or disapproved or approval deferred and any conditions to which approval is subject;

(2) Whether the contractor must authorize the Government to defend the action;

(3) Whether the Government will take charge of the action; or

(4) Whether the Government must receive an assignment of the contractor's rights.

(B) When defensive litigation is approved at a later stage or at the conclusion of the matter, reimbursement can be made for only those expenses which would have been reimbursable as allowable costs if the Department had originally approved the defense of the litigation.

2.1 Disapproval of Defensive Litigation

If the Department disapproves in advance the costs of defense of the litigation, the contractor will be notified of the disapproval and that contract funds may not be used to fund the defense of the litigation. The contractor will also be informed if the Department changes its position. Contractor compliance with these policies and procedures does not itself obligate the Department to reimburse litigation costs or judgment costs when Departmental approval of the litigation cost has been denied or deferred.

3.0 Notice to the Department of Significant Matters and Litigation

The contractor's procedures under its Legal Management Plan should include provisions for earliest possible notification to the Department of the likely initiation of any ''significant matters'' involving class actions, radiation or toxic substance exposure, problems concerning the safeguarding of classified information, and any other matters involving issues which the contractor has reason to believe are of general importance to the Department or the government as a whole.

4.0 Alternative Dispute Resolution

Contractors are expected to evaluate all matters for appropriate alternative dispute resolution (ADR) at various stages of an issue in dispute, *e.g.*, before a case is filed, pre-discovery, after initial discovery and pre-trial. This evaluation should be done in coordination with the Department's ADR liaison if one has been established or appointed or the Department counsel if an ADR liaison has not been appointed. Contractors, contractor counsel, and Department counsel are also encouraged to consult with the Department's Director of the

Office of Dispute Resolution. The Department anticipates that mediation will be the principal and most common method of alternative dispute resolution. In exceptional circumstances, arbitration may be appropriate. However, agreement to arbitrate should generally be consistent with the Administrative Dispute Resolution Act (incorporated in part at 5 U.S.C. 571, *et seq.*) and Department guidance issued under that Act. When a decision to arbitrate is made, a statement fixing the maximum award amount should be agreed to in advance by the participants.

5.0 Cost Allowability Issues

A determination of cost reasonableness may depend on a variety of considerations and circumstances. In accordance with 48 CFR (FAR) 31.201–3, no presumption of reasonableness is attached to the incurrence of costs by a contractor. 10 CFR part 719 and this Appendix provide contractors guidelines for incurring legal costs to which adherence should result in a determination of allowability if the cost is otherwise allowable under the contract.

5.1 Underlying Cause for Incurrence of Costs

(A) While 10 CFR part 719 provides procedures for incurring legal costs, the determination of the reason for the incurrence of the legal costs, *e.g.,* liability, fault or avoidability, is a separate determination. This latter determination may involve, for example, a possible finding of willful misconduct or lack of good faith by contractor management in the case of third party liability, or a finding of violation of a statute or regulation by the contractor in a governmental proceeding. The reason for the contractor incurring costs may be determinative of the allowability of the contractor's legal costs. For example, legal costs incurred by a contractor in defending actions brought by governmental agency may be covered by the Major Fraud Act, 41 U.S.C. 256(k), implemented as a cost principle at 48 CFR (FAR) 31.205–47. In such cases, the statute may restrict the Department's authority to reimburse legal costs incurred by the contractor regardless of the outcome of the action.

(B) In some cases, the final determination of allowability of legal costs cannot be made until a matter is fully resolved. This is particularly true in the case of legal defense costs covered by the restrictions in the Major Fraud Act and is also a common problem in cases covered by various whistleblower statutes and regulations. In certain circumstances, contract and cost principle language may permit conditional reimbursement of costs pending the outcome of the legal matter. Whether the Department makes conditional reimbursements or withholds any payment pending the outcome, legal costs ultimately reimbursed by the Department must satisfy the standards of cost reasonableness.

5.2 Fees and Other Charges

(A) Requests by retained legal counsel that are not in a direct contract with the Department for fee increases should be sent in writing to the contractor, who should review the request for reasonableness. If the contractor determines the request is reasonable, the contractor should seek approval for the request from Department counsel and the contracting officer before it authorizes any increase. Contractors should attempt to lock in rates for partners, associates and paralegals for at least a two-year period.

(B) Costs listed in 10 CFR 719.33(c) are usually incorporated into the rate or fee structure. Consultants or experts hired by retained legal counsel who do not include any overhead or similar charges, such as computer time, in their base rate, must have those charges approved in advance by Department counsel and the contracting officer. Time charged by law students should be scrutinized for its efficiency and have prior authorization.

(C) Travel time may be reimbursed at a full rate for the portion of time during which retained legal counsel actually performs work for which it was retained; any remaining travel time during normal working hours shall be reimbursed at 50 percent, except that in no event is travel time for time during which work was performed for other clients reimbursable. Also, for long distance travel that could be completed by various methods of transportation, *i.e.,* car, train, or plane, only the charge for the overall fastest travel time will be considered reasonable.

(D) For costs associated with the creation and use of computerized databases, contractors and retained legal counsel must ensure that the creation and use of computerized databases is necessary and cost-effective. Potential use of databases originally created by the Department or its contractors for other purposes, but that can be used to assist a contractor or retained legal counsel in connection with a particular matter, should be considered and be coordinated with Department counsel.

6.0 Role of Department Counsel as the Contracting Officer's Representative

(A) An attorney from the field office or from Headquarters will be appointed a contracting officer's representative by the cognizant contracting officer. A contracting officer may designate other Government personnel to act as authorized representatives for functions not involving a change in the scope, price, terms or conditions of the contract. This designation is made in writing and contains specific instructions regarding the extent to which the representatives may take action for the contracting officer, and prohibits the representative from signing contractual documents. The contracting officer is the only person authorized to approve changes in any of the requirements under the contract.

(B) Additional discussion of the authority and limitation of contracting officers can be found at 48 CFR (FAR) 1.602–1, and for contracting officer's representatives at 48 CFR (DEAR) 942.270–1. The clause, Technical Direction, 48 CFR (DEAR) 952.242–70, also discusses the responsibilities and limitations of a contracting officer's representative.

7.0 Future Amendments to Guidance

The Office of the General Counsel may by memorandum provide additional guidance to contractors. These memoranda will serve as guidance for ''safe harbor'' practices for contractors procuring outside legal services.

Attachment—Contractor Litigation and Legal Costs, Model Bill Certification and Format

1. Certification

Bills or invoices should contain a certification signed by a representative of the retained legal counsel to the effect that:

''Under penalty of law, [the representative] acknowledges the expectation that the bill will be paid by the contractor and that the contractor will be reimbursed by the Federal Government through the U.S. Department of Energy, and, based on personal knowledge and a good faith belief, certifies that the bill is truthful and accurate, and that the services and charges set forth herein comply with the terms of engagement and the policies set forth in the Department of Energy's regulation and guidance on contractor legal management requirements, and that the costs and charges set forth herein are necessary.''

2. Model Bill Format

I.—FOR FEES

Date of service	Description of service	Name or initials of attorney	Approved rate	Time charged	Amount (rate × time)
(See Note 1 to this table).					

II.—FOR DISBURSEMENTS

Date	Description of disbursement	Amount
(See Note 2 to this table).		

Note 1—Description of Service: All fees must be itemized and described in sufficient detail and specificity to reflect the purpose and nature of the work performed (*e.g.,* subject matter researched or discussed; names of participants of calls/meetings; type of documents reviewed).

Note 2—Description of Disbursement: Description should be in sufficient detail to determine that the disbursement expense was in accordance with all applicable Department policies on reimbursement of contractor legal costs and the terms of engagement between the contractor and the retained legal counsel. The date the expense was incurred or disbursed should be listed rather than the date the expense was processed. The following should be itemized: copy charge (*i.e.,* number of pages times a maximum of 10 cents per page); fax charges (date, phone number and actual amount); overnight delivery (date and amount); electronic research (date and amount); extraordinary postage (*i.e.,* bulk or certified mail); court reporters; expert witness fees; filing fees; outside copying or binding charges; temporary help (assuming prior approval).

Note 3—Receipts: Receipts for all expenses equal to or above $75 must be attached.

2. The authority citation for Part 931 continues to read as follows:

Authority: 42 U.S.C. 7101, *et seq.*; 40 U.S.C. 486(c); 50 U.S.C. 2401, *et seq.*; 42 U.S.C. 2201.

PART 931—COST PRINCIPLES

3. Section 931.205–19 is added to read as follows:

931.205–19 Insurance and Indemnification. (Department coverage-paragraph (h)).

(h) Cost reimbursement contracts involving work performed at facilities owned or leased by the Department for an amount exceeding $100,000,000 must insert the clause at 48 CFR 970.5228–1, Insurance-Litigation and claims.

4. Section 931.205–33 is added to read as follows:

931.205–33 Professional and consultant service costs. (Department coverage-paragraph (g)).

(g)(1) Reasonable litigation and other legal expenses are allowable when incurred in accordance with 10 CFR part 719, Contractor Legal Management Requirements, if not otherwise made unallowable by law or provisions of the contract.

(2)(A) Cost reimbursement contracts involving work performed at facilities owned or leased by the Department for an amount exceeding $100,000,000 are covered by this cost principle and 10 CFR part 719.

(B) This cost principle and 10 CFR part 719 are applicable to legal counsel retained by the Department itself for litigation and other legal services where the legal costs over the life of the matter for which counsel has been retained are expected to exceed $100,000.

(3) Contractors described in paragraph (g)(2)(A) of this section are required to submit a Legal Management Plan within 60 days of execution of a contract.

PART 970—DOE MANAGEMENT AND OPERATING CONTRACTS

5. The authority citation for Part 970 continues to read as follows:

Authority: Atomic Energy Act of 1954 (42 U.S.C. 2201); Department of Energy Organization Act (42 U.S.C. 7101, *et seq.*); and National Nuclear Security Administration Act (50 U.S.C. 2401, *et seq.*)

6. Section 970.3102–05–33 is added to read as follows:

970.3102–05–33 Professional and consultant service costs. (Department coverage-paragraph (g)).

(g) Section 931.205–33 is applicable to management and operating contracts under this part.

7. Section 970.5228–1 is amended by:

a. revising clause paragraph (e)(2),

b. revising the introcutory text of clause paragraph (h),

c. revising clause paragraph (j)(4), and

d. removing clause paragraph (m).

The revisions read as follows:

970.5228–1 Insurance—litigation and claims.

* * * * *

(e) * * *

(2) For liabilities (and reasonable expenses incidental to such liabilities, including litigation costs) to third persons not compensated by insurance or otherwise without regard to and as an exception to the limitation of cost or limitation of funds clause of this contract.

* * * * *

(h) In addition to the cost reimbursement limitations contained in the cost principles at FAR part 31, as supplemented in the DEAR, and notwithstanding any other provision of this contract, the contractor's liabilities to third persons, including employees but excluding costs incidental to workers' compensation actions (and any expenses incidental to such liabilities, including litigation costs, counsel fees, judgments and settlements), shall not be reimbursed if such liabilities were caused by contractor managerial personnel's * * *.

* * * * *

(j) * * *

(4) The term ''contractor's managerial personnel'' is defined in the Property clause in this contract.

* * * * *

8. Section 970.5244–1 is amended by revising the reference to ''paragraphs (b) through (x)'' in the last sentence of clause paragraph (a) to read ''paragraphs (b) through (y)'' and by adding clause paragraph (y) to read as follows:

970.5244–1 Contractor purchasing system.

* * * * *

(y) Legal Services. Contractor purchases of litigation and other legal services are subject to the requirements in 10 CFR part 719 and the requirements of this clause.

[FR Doc. 01–584 Filed 1–17–01; 8:45 am]

BILLING CODE 6450–01–P

DEPARTMENT OF ENERGY

10 CFR Parts 1040 and 1042

RIN: 1901–AA87

Nondiscrimination on the Basis of Sex in Education Programs or Activities Receiving Federal Financial Assistance

AGENCY: Department of Energy.

ACTION: Final rule.

SUMMARY: This final rule adds a new part to the Code of Federal Regulations to replace existing Department of Energy (DOE) regulations for the enforcement of Title IX of the Education Amendments of 1972, as amended (''Title IX''). Title IX prohibits recipients of Federal financial assistance from discriminating on the basis of sex in education programs or activities. The provisions of this final rule are the same as a common rule published by the Department of Justice on August 30, 2000, for Federal agencies that did not already have Title IX implementing regulations. DOE adopts the provisions of the common rule in order to promote consistent and adequate enforcement of Title IX.

EFFECTIVE DATE: February 20, 2001.

FOR FURTHER INFORMATION CONTACT: Sharon Wyatt, Paralegal Specialist, Office of Civil Rights and Diversity, Department of Energy, 1000 Independence Avenue, SW., Washington, DC 20285. Telephone: (202) 586–2256.

SUPPLEMENTARY INFORMATION:

I. Background

On June 13, 1980, DOE published a final rule (10 CFR part 1040) to implement various nondiscrimination statutes, including Title IX of the Education Amendments of 1972. 45 FR 40514. DOE's Title IX regulations, which prohibit discrimination on the basis of sex in educational programs or activities operated by recipients of

Federal financial assistance, are found principally in subpart C of 10 CFR part 1040.

On August 30, 2000, 20 Federal departments and agencies published a final common rule to provide for the enforcement of Title IX by participating Federal agencies that had not previously promulgated Title IX implementing regulations (''Title IX common rule''). 65 FR 52858. The Department of Justice coordinated development of the Title IX common rule, consistent with its responsibility under Executive Order 12250 to ensure the consistent and effective implementation of Title IX and other civil rights laws. DOE, as one of four Federal agencies that had already promulgated Title IX regulations, did not join in the common rulemaking.

Upon further consideration, and on the basis of the common notice of final rulemaking, DOE has decided to replace its existing regulations with the provisions of the common rule. DOE's current regulations have not been amended since 1980 and do not reflect intervening developments, including certain Supreme Court decisions, the Civil Rights Restoration Act of 1987 (Public Law 100–259), and various Executive orders. By adopting the common rule, DOE brings its regulations up-to-date and, by adopting the language and form of the Title IX common rule, should make it easier for recipients of DOE financial assistance to comply with Title IX requirements.

II. Overview of the Rule

Subpart A of this final rule sets forth definitions as well as provisions concerning remedial action and affirmative action, required assurances, adoption of grievance procedures, and notification of nondiscrimination policies. The effect of state and other laws and other requirements is also explained. Subpart B addresses the scope or coverage of Title IX, and Subpart C addresses nondiscrimination on the basis of sex in admission and recruitment practices with respect to students.

Subpart D addresses nondiscrimination on the basis of sex in education programs or activities. Specific areas covered in this subpart are housing, access to course offerings, access to schools operated by local education agencies, counseling, financial assistance, employment assistance to students, health and insurance benefits and services, consideration of marital and parental status, and athletics.

Subpart E covers the prohibitions of discrimination on the basis of sex in employment in educational programs or activities. Specific aspects of employment that are addressed include hiring and employment criteria, recruitment, compensation, job classification and structure, promotion and termination, fringe benefits, consideration of marital or parental status, leave practices, advertising, and preemployment inquiries as to parental and marital status. This subpart also includes a provision to exempt from Title IX coverage employment actions where sex is a bona fide occupational qualification.

Finally, Subpart F contains provisions that reference DOE's list of covered programs and incorporate DOE's procedures for implementation and enforcement of Title IX.

By adopting the provisions of the Title IX common rule in this rule, DOE is not imposing any new substantive requirements, beyond the requirements of Title IX, on recipients of DOE funding.

As shown in the following ''cross-walk'' table, some of the provisions of new part 1042 (numbered to correspond to the common rule) appear in different order than in the existing regulations in part 1042:

Part 1042	Part 1040 (current regulations)
Subpart A	
1042.100	1040.21
1042.105	1040.23
1042.110	1040.7
1042.115	1040.4
1042.120	1040.4(b)(1)
1042.125	1040.24
1042.130	1040.8
1042.135	1040.5
1042.140	1040.6
Subpart B	
1042.200	1040.22
1042.205	1040.25
1042.210	1040.26
1042.215	1040.27
1042.220	1040.28
1042.225	1040.29
1042.230	1040.30
1042.235	1040.27
Subpart C	
1042.300	1040.31
1042.305	1040.32
1042.310	1040.33
Subpart D	
1042.400	1040.34
1042.405	1040.35
1042.410	1040.36
1042.415	1040.37
1042.420	1040.38
1042.425	1040.39
1042.430	1040.40
1042.435	1040.41
1042.440	1040.42
1042.445	1040.43
1042.450	1040.44
1042.455	1040.45
Subpart E	
1042.500	1040.47
1042.505	1040.48
1042.510	1040.49
1042.515	1040.50
1042.520	1040.51
1042.525	1040.52
1042.530	1040.53
1042.535	1040.54
1042.540	1040.55
1042.545	1040.56
1042.550	1040.57
Subpart F	
1042.600	Appendix A
1042.605	1040.46

The only deviation in numbering between part 1042 and the Title IX common rule is in subpart F. Subpart F of the Title IX common rule is titled ''Procedures'' and contains § ____.600, ''Notice of covered programs,'' that requires each participating agency to publish, within 60 days of the common rule's effective date, a notice of the programs covered by its Title IX regulations, and to periodically republish the notice listing the programs. In addition, most participating agencies have included in subpart F a § ____.605 that incorporates by reference the agencies' procedures for enforcing Title VI of the Civil Rights Act of 1964, as amended (42 U.S.C. 2000d, *et seq.*). DOE already has published a list of covered programs as appendix A to 10 CFR part 1040. Therefore, DOE includes in subpart F, titled ''Other Provisions,'' a § 1042.600, ''Covered programs,'' which simply references the list of covered programs in appendix A to part 1040. DOE has followed other agencies in including in subpart F a § 1042.605, ''Enforcement procedures,'' that incorporates the procedures for enforcing Title VI in subparts G and H of part 1040.

This final rule includes various compliance deadlines included in the Title IX common rule, including deadlines for self-evaluation (§ 1042.110(c)) and initial notification of the recipient's nondiscrimination policy (§ 1042.140(a)(2)). Most DOE recipients already comply with these requirements, and DOE does not intend this rule to require any additional actions by them. DOE notes that the preamble to the final Title IX common rule explains that recipient educational institutions that have conducted a self-evaluation under Title IX need not, as a result of the Title IX common rule, conduct a new self-evaluation. 65 FR 52863.

III. Public Comment

This rule imposes no new substantive requirements on recipients of DOE financial assistance. These revisions to DOE's Title IX regulations only conform DOE's regulations to the Title IX common rule adopted by other Federal agencies and amend the text to reflect changes in the law that have occurred since DOE published its Title IX regulations in 1980. Thus, this final rule is not a significant rule involving equal employment opportunity that must be proposed for public comment under Executive Order 12067, section 1–305. Nor is an opportunity for public comment required by the rulemaking provisions of the Administrative Procedure Act, 5 U.S.C. 553.

Furthermore, the provisions of this final rule were proposed by the Department of Justice and public comment invited for a period of 60 days. See 64 FR 58567 (Oct. 29, 1999). DOJ received a total of 22 comments, five of which were submitted by other Federal agencies. The preamble to the final Title IX common rule contains a summary of the public comments and the participating agencies' responses to those comments. See 65 FR 52860–52864.

In light of the opportunity for public comment provided by the Department of Justice, and DOE's obligation under Executive Order 12250, section 1–402, to promulgate regulations ''consistent with the requirements prescribed by the Attorney General,'' to the extent permitted by law, no purpose would be served by inviting public comment on these regulations.

IV. Procedural Requirements

A. Review Under Executive Order 12866

This final rule has been determined not to be a ''significant regulatory action'' under Executive Order 12866, ''Regulatory Planning and Review,'' (58 FR 51735, October 4, 1993). Accordingly, this action was not subject to review under that Executive Order by the Office of Information and Regulatory Affairs of the Office of Management and Budget.

B. Review Under Executive Order 12250

This final rule has been reviewed by the Attorney General in accordance with the provisions of Executive Order 12250, ''Leadership and Coordination of Nondiscrimination Laws,'' (3 CFR, 1980 Comp., p. 298).

C. Review Under Executive Order 12067

These regulations were submitted for review by the Equal Employment Opportunity Commission pursuant to Executive Order 12067, ''Providing for Coordination of Federal Equal Employment Opportunity Programs,'' (3 CFR, 1978 Comp., p. 206).

D. Unfunded Mandates Reform Act of 1995

The Unfunded Mandates Reform Act of 1995 (Public Law 104–4) generally requires a Federal agency to perform a detailed assessment of costs and benefits of any rule imposing a Federal mandate with costs to State, local, or tribal governments, or to the private sector, of $100 million or more. These Title IX regulations, which enforce a statutory prohibition on discrimination on the basis of sex, will not result in the expenditure by State, local, and tribal governments, in the aggregate, or by the private sector, of $100 million or more in any one year, nor will they significantly or uniquely affect small governments. No further action is required by the Unfunded Mandates Reform Act of 1995.

E. The Regulatory Flexibility Act

The Regulatory Flexibility Act (5 U.S.C. 601 *et seq.*) requires preparation of an initial regulatory flexibility analysis for any rule that by law must be proposed for public comment unless the agency certifies that the rule will not have a significant economic impact on a substantial number of small entities. DOE is not required by law to propose this financial assistance regulation for public comment. Accordingly, the Regulatory Flexibility Act requirements do not apply to this rulemaking, and no regulatory flexibility analysis has been prepared.

F. Paperwork Reduction Act of 1995

No new information or record keeping requirements are imposed by this rulemaking. Accordingly, no clearance by the Office of Management and Budget is required under the Paperwork Reduction Act of 1995 (44 U.S.C. 3501 *et seq.*). The information collections in this rule are covered by OMB Control No. 1910–0400.

G. Review Under the National Environmental Policy Act

DOE has concluded that promulgation of this final rule falls into a class of actions that would not individually or cumulatively have a significant impact on the human environment, as determined by DOE's regulations implementing the National Environmental Policy Act of 1969 (42 U.S.C. 4321 *et seq.*) Specifically, this rule is covered under the Categorical Exclusion in paragraph A5 to subpart D, 10 CFR part 1021, which covers rulemakings that interpret or amend an existing regulation without changing the environmental effect of the regulation. Accordingly, neither an environmental assessment nor an environmental impact statement is required.

H. Executive Order 13132

These Title IX regulations will not have substantial direct effects on the States, on the relationship between the national government and the States, or on the distribution of power and responsibilities among the various levels of government. These Title IX regulations do not subject recipients of Federal funding to any new substantive obligations because all recipients of Federal funding that operate education programs or activities have been bound by Title IX's anti-discrimination provision since 1972. Therefore, in accordance with section 6 of Executive Order 13132, DOE has determined that this rule does not have sufficient federalism implications to warrant the preparation of a federalism summary impact statement. No further action is required.

I. Review Under Executive Order 12988

With respect to the review of existing regulations and the promulgation of new regulations, section 3 of Executive Order 12988, ''Civil Justice Reform,'' 61 FR 4729 (February 7, 1996), imposes on Executive agencies the general duty to eliminate drafting errors and ambiguity; write regulations to minimize litigation; provide a clear legal standard for affected conduct rather than a general standard; and promote simplification and burden reduction. Section 3(c) of Executive Order 12988 requires Executive agencies to review regulations in light of applicable standards in section 3(a) and section 3(b) to determine whether they are met. DOE has completed the required review and determined that, to the extent permitted by law, this final rule meets the relevant standards of Executive Order 12988.

J. Congressional Notification

As required by 5 U.S.C. 801, DOE will report to Congress promulgation of this final rule prior to its effective date. The report will state that it has been determined that the rule is not a ''major rule'' as defined by 5 U.S.C. 804(2).

List of Subjects in 10 CFR Parts 1040 and 1042

Administrative practice and procedure, Civil rights, Colleges and universities, Education, Educational facilities, Educational research, Educational study programs, Equal educational opportunity, Equal

employment opportunity, Grant programs-education, Investigations, Marital status discrimination, Reporting and recordkeeping requirements, Schools, Sex discrimination, Student aid, Women.

Issued in Washington, D.C. on January 2, 2001.

T.J. Glauthier,

Deputy Secretary.

For the reasons stated in the preamble, DOE hereby amends chapter X of Title 10 of the Code of Federal Regulations as set forth below:

PART 1040—NONDISCRIMINATION IN FEDERALLY ASSISTED PROGRAMS

1. The authority citation is revised to read as follows:

Authority: 20 U.S.C. 1681–1686; 29 U.S.C. 794; 42 U.S.C. 2000d to 2000d–4a, 3601–3631, 5891, 6101–6107, 6870, 7101 *et seq.*; and 50 U.S.C. 2401 *et seq.*

2. Section 1040.1 is amended by designating the current text as paragraph (a) and adding paragraphs (b) and (c) to read as follows:

§ 1040.1 Purpose.

* * * * *

(b) DOE regulations on enforcement of nondiscrimination on the basis of handicap in programs or activities conducted by DOE are in part 1041 of this chapter.

(c) DOE regulations on enforcement of nondiscrimination on the basis of sex, under Title IX of the Education Act Amendments of 1972, as amended, are in part 1042 of this chapter.

Subpart C—[Removed and Reserved]

3. Subpart C of 10 CFR part 1040 is removed and reserved.

4. Part 1042, is added to chapter X to read as follows:

PART 1042—NONDISCRIMINATION ON THE BASIS OF SEX IN EDUCATION PROGRAMS OR ACTIVITIES RECEIVING FEDERAL FINANCIAL ASSISTANCE

Subpart A—Introduction

Sec.

1042.100 Purpose and effective date.
1042.105 Definitions.
1042.110 Remedial and affirmative action and self-evaluation.
1042.115 Assurance required.
1042.120 Transfers of property.
1042.125 Effect of other requirements.
1042.130 Effect of employment opportunities.
1042.135 Designation of responsible employee and adoption of grievance procedures.
1042.140 Dissemination of policy.

Subpart B—Coverage

1042.200 Application.
1042.205 Educational institutions and other entities controlled by religious organizations.
1042.210 Military and merchant marine educational institutions.
1042.215 Membership practices of certain organizations.
1042.220 Admissions.
1042.225 Educational institutions eligible to submit transition plans.
1042.230 Transition plans.
1042.235 Statutory amendments.

Subpart C—Discrimination on the Basis of Sex in Admission and Recruitment Prohibited

1042.300 Admission.
1042.305 Preference in admission.
1042.310 Recruitment.

Subpart D—Discrimination on the Basis of Sex in Education Programs or Activities Prohibited

1042.400 Education programs or activities.
1042.405 Housing.
1042.410 Comparable facilities.
1042.415 Access to course offerings.
1042.420 Access to schools operated by LEAs.
1042.425 Counseling and use of appraisal and counseling materials.
1042.430 Financial assistance.
1042.435 Employment assistance to students.
1042.440 Health and insurance benefits and services.
1042.445 Marital or parental status.
1042.450 Athletics.
1042.455 Textbooks and curricular material.

Subpart E—Discrimination on the Basis of Sex in Employment in Education Programs or Activities Prohibited

1042.500 Employment.
1042.505 Employment criteria.
1042.510 Recruitment.
1042.515 Compensation.
1042.520 Job classification and structure.
1042.525 Fringe benefits.
1042.530 Marital or parental status.
1042.535 Effect of state or local law or other requirements.
1042.540 Advertising.
1042.545 Pre-employment inquiries.
1042.550 Sex as a bona fide occupational qualification.

Subpart F—Other Provisions

1042.600 Covered programs.
1042.605 Enforcement procedures.

Authority: 20 U.S.C. 1681, 1682, 1683, 1685, 1686, 1687, 1688; 42 U.S.C. 7101 *et seq.*; and 50 U.S.C. 2401 *et seq.*

Subpart A—Introduction

§ 1042.100 Purpose and effective date.

The purpose of these Title IX regulations is to effectuate Title IX of the Education Amendments of 1972, as amended (except sections 904 and 906 of those Amendments) (20 U.S.C. 1681, 1682, 1683, 1685, 1686, 1687, 1688), which is designed to eliminate (with certain exceptions) discrimination on the basis of sex in any education program or activity receiving Federal financial assistance, whether or not such program or activity is offered or sponsored by an educational institution as defined in these Title IX regulations. The effective date of these Title IX regulations is February 20, 2001.

§ 1042.105 Definitions.

As used in these Title IX regulations, the term:

Administratively separate unit means a school, department, or college of an educational institution (other than a local educational agency) admission to which is independent of admission to any other component of such institution.

Admission means selection for part-time, full-time, special, associate, transfer, exchange, or any other enrollment, membership, or matriculation in or at an education program or activity operated by a recipient.

Applicant means one who submits an application, request, or plan required to be approved by an official of the Department of Energy, or by a recipient, as a condition to becoming a recipient of Federal financial assistance.

Designated agency official means the Director, Office of Civil Rights and Diversity or any official to whom the Director's functions under this part are relegated.

Educational institution means a local educational agency (LEA) as defined by 20 U.S.C. 8801(18), a preschool, a private elementary or secondary school, or an applicant or recipient that is an institution of graduate higher education, an institution of undergraduate higher education, an institution of professional education, or an institution of vocational education, as defined in this section.

Federal financial assistance means any of the following, when authorized or extended under a law administered by the Federal agency that awards such assistance:

(1) A grant or loan of Federal financial assistance, including funds made available for:

(i) The acquisition, construction, renovation, restoration, or repair of a building or facility or any portion thereof; and

(ii) Scholarships, loans, grants, wages, or other funds extended to any entity for payment to or on behalf of students admitted to that entity, or extended directly to such students for payment to that entity.

(2) A grant of Federal real or personal property or any interest therein, including surplus property, and the proceeds of the sale or transfer of such property, if the Federal share of the fair market value of the property is not, upon such sale or transfer, properly accounted for to the Federal Government.

(3) Provision of the services of Federal personnel.

(4) Sale or lease of Federal property or any interest therein at nominal consideration, or at consideration reduced for the purpose of assisting the recipient or in recognition of public interest to be served thereby, or permission to use Federal property or any interest therein without consideration.

(5) Any other contract, agreement, or arrangement that has as one of its purposes the provision of assistance to any education program or activity, except a contract of insurance or guaranty.

Institution of graduate higher education means an institution that:

(1) Offers academic study beyond the bachelor of arts or bachelor of science degree, whether or not leading to a certificate of any higher degree in the liberal arts and sciences;

(2) Awards any degree in a professional field beyond the first professional degree (regardless of whether the first professional degree in such field is awarded by an institution of undergraduate higher education or professional education); or

(3) Awards no degree and offers no further academic study, but operates ordinarily for the purpose of facilitating research by persons who have received the highest graduate degree in any field of study.

Institution of professional education means an institution (except any institution of undergraduate higher education) that offers a program of academic study that leads to a first professional degree in a field for which there is a national specialized accrediting agency recognized by the Secretary of Education.

Institution of undergraduate higher education means:

(1) An institution offering at least two but less than four years of college-level study beyond the high school level, leading to a diploma or an associate degree, or wholly or principally creditable toward a baccalaureate degree; or

(2) An institution offering academic study leading to a baccalaureate degree; or

(3) An agency or body that certifies credentials or offers degrees, but that may or may not offer academic study.

Institution of vocational education means a school or institution (except an institution of professional or graduate or undergraduate higher education) that has as its primary purpose preparation of students to pursue a technical, skilled, or semiskilled occupation or trade, or to pursue study in a technical field, whether or not the school or institution offers certificates, diplomas, or degrees and whether or not it offers full-time study.

Recipient means any State or political subdivision thereof, or any instrumentality of a State or political subdivision thereof, any public or private agency, institution, or organization, or other entity, or any person, to whom Federal financial assistance is extended directly or through another recipient and that operates an education program or activity that receives such assistance, including any subunit, successor, assignee, or transferee thereof.

Student means a person who has gained admission.

Title IX means Title IX of the Education Amendments of 1972, Public Law 92–318, 86 Stat. 235, 373 (codified as amended at 20 U.S.C. 1681–1688) (except sections 904 and 906 thereof), as amended by section 3 of Public Law 93–568, 88 Stat. 1855, by section 412 of the Education Amendments of 1976, Public Law 94–482, 90 Stat. 2234, and by Section 3 of Public Law 100–259, 102 Stat. 28, 28–29 (20 U.S.C. 1681, 1682, 1683, 1685, 1686, 1687, 1688).

Title IX regulations means the provisions set forth in this 10 CFR Part 1042.

Transition plan means a plan subject to the approval of the Secretary of Education pursuant to section 901(a)(2) of the Education Amendments of 1972, 20 U.S.C. 1681(a)(2), under which an educational institution operates in making the transition from being an educational institution that admits only students of one sex to being one that admits students of both sexes without discrimination.

§ 1042.110 Remedial and affirmative action and self-evaluation.

(a) *Remedial action.* If the designated agency official finds that a recipient has discriminated against persons on the basis of sex in an education program or activity, such recipient shall take such remedial action as the designated agency official deems necessary to overcome the effects of such discrimination.

(b) *Affirmative action.* In the absence of a finding of discrimination on the basis of sex in an education program or activity, a recipient may take affirmative action consistent with law to overcome the effects of conditions that resulted in limited participation therein by persons of a particular sex. Nothing in these Title IX regulations shall be interpreted to alter any affirmative action obligations that a recipient may have under Executive Order 11246, 3 CFR, 1964–1965 Comp., p. 339; as amended by Executive Order 11375, 3 CFR, 1966–1970 Comp., p. 684; as amended by Executive Order 11478, 3 CFR, 1966–1970 Comp., p. 803; as amended by Executive Order 12086, 3 CFR, 1978 Comp., p. 230; as amended by Executive Order 12107, 3 CFR, 1978 Comp., p. 264.

(c) *Self-evaluation.* Each recipient education institution shall, within one year of February 20, 2001:

(1) Evaluate, in terms of the requirements of these Title IX regulations, its current policies and practices and the effects thereof concerning admission of students, treatment of students, and employment of both academic and non-academic personnel working in connection with the recipient's education program or activity;

(2) Modify any of these policies and practices that do not or may not meet the requirements of these Title IX regulations; and

(3) Take appropriate remedial steps to eliminate the effects of any discrimination that resulted or may have resulted from adherence to these policies and practices.

(d) *Availability of self-evaluation and related materials.* Recipients shall maintain on file for at least three years following completion of the evaluation required under paragraph (c) of this section, and shall provide to the designated agency official upon request, a description of any modifications made pursuant to paragraph (c)(2) of this section and of any remedial steps taken pursuant to paragraph (c)(3) of this section.

§ 1042.115 Assurance required.

(a) *General.* Either at the application stage or the award stage, the Department of Energy must ensure that applications for Federal financial assistance or awards of Federal financial assistance contain, be accompanied by, or be covered by a specifically identified assurance from the applicant or recipient, satisfactory to the designated agency official, that each education program or activity operated by the applicant or recipient and to which

these Title IX regulations apply will be operated in compliance with these Title IX regulations. An assurance of compliance with these Title IX regulations shall not be satisfactory to the designated agency official if the applicant or recipient to whom such assurance applies fails to commit itself to take whatever remedial action is necessary in accordance with § 1042.110(a) to eliminate existing discrimination on the basis of sex or to eliminate the effects of past discrimination whether occurring prior to or subsequent to the submission to the designated agency official of such assurance.

(b) *Duration of obligation.* (1) In the case of Federal financial assistance extended to provide real property or structures thereon, such assurance shall obligate the recipient or, in the case of a subsequent transfer, the transferee, for the period during which the real property or structures are used to provide an education program or activity.

(2) In the case of Federal financial assistance extended to provide personal property, such assurance shall obligate the recipient for the period during which it retains ownership or possession of the property.

(3) In all other cases such assurance shall obligate the recipient for the period during which Federal financial assistance is extended.

(c) *Form.* (1) The assurances required by paragraph (a) of this section, which may be included as part of a document that addresses other assurances or obligations, shall include that the applicant or recipient will comply with all applicable Federal statutes relating to nondiscrimination. These include but are not limited to: Title IX of the Education Amendments of 1972, as amended (20 U.S.C. 1681–1683, 1685–1688).

(2) The designated agency official will specify the extent to which such assurances will be required of the applicant's or recipient's subgrantees, contractors, subcontractors, transferees, or successors in interest.

§ 1042.120 Transfers of property.

If a recipient sells or otherwise transfers property financed in whole or in part with Federal financial assistance to a transferee that operates any education program or activity, and the Federal share of the fair market value of the property is not upon such sale or transfer properly accounted for to the Federal Government, both the transferor and the transferee shall be deemed to be recipients, subject to the provisions of §§ 1042.205 through 1042.235(a).

§ 1042.125 Effect of other requirements.

(a) *Effect of other Federal provisions.* The obligations imposed by these Title IX regulations are independent of, and do not alter, obligations not to discriminate on the basis of sex imposed by Executive Order 11246, 3 CFR, 1964–1965 Comp., p. 339; as amended by Executive Order 11375, 3 CFR, 1966–1970 Comp., p. 684; as amended by Executive Order 11478, 3 CFR, 1966–1970 Comp., p. 803; as amended by Executive Order 12087, 3 CFR, 1978 Comp., p. 230; as amended by Executive Order 12107, 3 CFR, 1978 Comp., p. 264; sections 704 and 855 of the Public Health Service Act (42 U.S.C. 295m, 298b–2); Title VII of the Civil Rights Act of 1964 (42 U.S.C. 2000e *et seq.*); the Equal Pay Act of 1963 (29 U.S.C. 206); and any other Act of Congress or Federal regulation.

(b) *Effect of State or local law or other requirements.* The obligation to comply with these Title IX regulations is not obviated or alleviated by any State or local law or other requirement that would render any applicant or student ineligible, or limit the eligibility of any applicant or student, on the basis of sex, to practice any occupation or profession.

(c) *Effect of rules or regulations of private organizations.* The obligation to comply with these Title IX regulations is not obviated or alleviated by any rule or regulation of any organization, club, athletic or other league, or association that would render any applicant or student ineligible to participate or limit the eligibility or participation of any applicant or student, on the basis of sex, in any education program or activity operated by a recipient and that receives Federal financial assistance.

§ 1042.130 Effect of employment opportunities.

The obligation to comply with these Title IX regulations is not obviated or alleviated because employment opportunities in any occupation or profession are or may be more limited for members of one sex than for members of the other sex.

§ 1042.135 Designation of responsible employee and adoption of grievance procedures.

(a) *Designation of responsible employee.* Each recipient shall designate at least one employee to coordinate its efforts to comply with and carryout its responsibilities under these Title IX regulations, including any investigation of any complaint communicated to such recipient alleging its noncompliance with these Title IX regulations or alleging any actions that would be prohibited by these Title IX regulations. The recipient shall notify all its students and employees of the name, office address, and telephone number of the employee or employees appointed pursuant to this paragraph.

(b) *Complaint procedure of recipient.* A recipient shall adopt and publish grievance procedures providing for prompt and equitable resolution of student and employee complaints alleging any action that would be prohibited by these Title IX regulations.

§ 1042.140 Dissemination of policy.

(a) *Notification of policy.* (1) Each recipient shall implement specific and continuing steps to notify applicants for admission and employment, students and parents of elementary and secondary school students, employees, sources of referral of applicants for admission and employment, and all unions or professional organizations holding collective bargaining or professional agreements with the recipient, that it does not discriminate on the basis of sex in the educational programs or activities that it operates, and that it is required by Title IX and these Title IX regulations not to discriminate in such a manner. Such notification shall contain such information, and be made in such manner, as the designated agency official finds necessary to apprise such persons of the protections against discrimination assured them by Title IX and these Title IX regulations, but shall state at least that the requirement not to discriminate in education programs or activities extends to employment therein, and to admission thereto unless §§ 1042.300 through 1042.310 do not apply to the recipient, and that inquiries concerning the application of Title IX and these Title IX regulations to such recipient may be referred to the employee designated pursuant to § 1042.135, or to the designated agency official.

(2) Each recipient shall make the initial notification required by paragraph (a)(1) of this section within 90 days of February 20, 2001 or of the date these Title IX regulations first apply to such recipient, whichever comes later, which notification shall include publication in:

(i) Newspapers and magazines operated by such recipient or by student, alumnae, or alumni groups for or in connection with such recipient; and

(ii) Memoranda or other written communications distributed to every student and employee of such recipient.

(b) *Publications.* (1) Each recipient shall prominently include a statement of

the policy described in paragraph (a) of this section in each announcement, bulletin, catalog, or application form that it makes available to any person of a type, described in paragraph (a) of this section, or which is otherwise used in connection with the recruitment of students or employees.

(2) A recipient shall not use or distribute a publication of the type described in paragraph (b)(1) of this section that suggests, by text or illustration, that such recipient treats applicants, students, or employees differently on the basis of sex except as such treatment is permitted by these Title IX regulations.

(c) *Distribution.* Each recipient shall distribute without discrimination on the basis of sex each publication described in paragraph (b)(1) of this section, and shall apprise each of its admission and employment recruitment representatives of the policy of nondiscrimination described in paragraph (a) of this section, and shall require such representatives to adhere to such policy.

Subpart B—Coverage

§ 1042.200 Application.

Except as provided in §§ 1042.205 through 1042.235(a), these Title IX regulations apply to every recipient and to each education program or activity operated by such recipient that receives Federal financial assistance.

§ 1042.205 Educational institutions and other entities controlled by religious organizations.

(a) *Exemption.* These Title IX regulations do not apply to any operation of an educational institution or other entity that is controlled by a religious organization to the extent that application of these Title IX regulations would not be consistent with the religious tenets of such organization.

(b) *Exemption claims.* An educational institution or other entity that wishes to claim the exemption set forth in paragraph (a) of this section shall do so by submitting in writing to the designated agency official a statement by the highest-ranking official of the institution, identifying the provisions of these Title IX regulations that conflict with a specific tenet of the religious organization.

§ 1042.210 Military and merchant marine educational institutions.

These Title IX regulations do not apply to an educational institution whose primary purpose is the training of individuals for a military service of the United States or for the merchant marine.

§ 1042.215 Membership practices of certain organizations.

(a) *Social fraternities and sororities.* These Title IX regulations do not apply to the membership practices of social fraternities and sororities that are exempt from taxation under section 501(a) of the Internal Revenue Code of 1954, 26 U.S.C. 501(a), the active membership of which consists primarily of students in attendance at institutions of higher education.

(b) *YMCA, YWCA, Girl Scouts, Boy Scouts, and Camp Fire Girls.* These Title IX regulations do not apply to the membership practices of the Young Men's Christian Association (YMCA), the Young Women's Christian Association (YWCA), the Girl Scouts, the Boy Scouts, and Camp Fire Girls.

(c) *Voluntary youth service organizations.* These Title IX regulations do not apply to the membership practices of a voluntary youth service organization that is exempt from taxation under section 501(a) of the Internal Revenue Code of 1954, 26 U.S.C. 501(a), and the membership of which has been traditionally limited to members of one sex and principally to persons of less than nineteen years of age.

§ 1042.220 Admissions.

(a) Admissions to educational institutions prior to June 24, 1973, are not covered by these Title IX regulations.

(b) *Administratively separate units.* For the purposes only of this section, §§ 1042.225 and 1042.230, and §§ 1042.300 through 1042.310, each administratively separate unit shall be deemed to be an educational institution.

(c) *Application of §§ 1042.300 through 1042.310.* Except as provided in paragraphs (d) and (e) of this section, §§ 1042.300 through 1042.310 apply to each recipient. A recipient to which §§ 1042.300 through 1042.310 apply shall not discriminate on the basis of sex in admission or recruitment in violation of §§ 1042.300 through 1042.310.

(d) *Educational institutions.* Except as provided in paragraph (e) of this section as to recipients that are educational institutions, §§ 1042.300 through 1042.310 apply only to institutions of vocational education, professional education, graduate higher education, and public institutions of undergraduate higher education.

(e) *Public institutions of undergraduate higher education.* §§ 1042.300 through 1042.310 do not apply to any public institution of undergraduate higher education that traditionally and continually from its establishment has had a policy of admitting students of only one sex.

§ 1042.225 Educational institutions eligible to submit transition plans.

(a) *Application.* This section applies to each educational institution to which §§ 1042.300 through 1042.310 apply that:

(1) Admitted students of only one sex as regular students as of June 23, 1972; or

(2) Admitted students of only one sex as regular students as of June 23, 1965, but thereafter admitted, as regular students, students of the sex not admitted prior to June 23, 1965.

(b) *Provision for transition plans.* An educational institution to which this section applies shall not discriminate on the basis of sex in admission or recruitment in violation of §§ 1042.300 through 1042.310.

§ 1042.230 Transition plans.

(a) *Submission of plans.* An institution to which § 1042.225 applies and that is composed of more than one administratively separate unit may submit either a single transition plan applicable to all such units, or a separate transition plan applicable to each such unit.

(b) *Content of plans.* In order to be approved by the Secretary of Education, a transition plan shall:

(1) State the name, address, and Federal Interagency Committee on Education Code of the educational institution submitting such plan, the administratively separate units to which the plan is applicable, and the name, address, and telephone number of the person to whom questions concerning the plan may be addressed. The person who submits the plan shall be the chief administrator or president of the institution, or another individual legally authorized to bind the institution to all actions set forth in the plan.

(2) State whether the educational institution or administratively separate unit admits students of both sexes as regular students and, if so, when it began to do so.

(3) Identify and describe with respect to the educational institution or administratively separate unit any obstacles to admitting students without discrimination on the basis of sex.

(4) Describe in detail the steps necessary to eliminate as soon as practicable each obstacle so identified and indicate the schedule for taking these steps and the individual directly responsible for their implementation.

(5) Include estimates of the number of students, by sex, expected to apply for, be admitted to, and enter each class during the period covered by the plan.

(c) *Nondiscrimination.* No policy or practice of a recipient to which § 1042.225 applies shall result in treatment of applicants to or students of such recipient in violation of §§ 1042.300 through 1042.310 unless such treatment is necessitated by an obstacle identified in paragraph (b)(3) of this section and a schedule for eliminating that obstacle has been provided as required by paragraph (b)(4) of this section.

(d) *Effects of past exclusion.* To overcome the effects of past exclusion of students on the basis of sex, each educational institution to which § 1042.225 applies shall include in its transition plan, and shall implement, specific steps designed to encourage individuals of the previously excluded sex to apply for admission to such institution. Such steps shall include instituting recruitment programs that emphasize the institution's commitment to enrolling students of the sex previously excluded.

§ 1042.235 Statutory amendments.

(a) This section, which applies to all provisions of these Title IX regulations, addresses statutory amendments to Title IX.

(b) These Title IX regulations shall not apply to or preclude:

(1) Any program or activity of the American Legion undertaken in connection with the organization or operation of any Boys State conference, Boys Nation conference, Girls State conference, or Girls Nation conference;

(2) Any program or activity of a secondary school or educational institution specifically for:

(i) The promotion of any Boys State conference, Boys Nation conference, Girls State conference, or Girls Nation conference; or

(ii) The selection of students to attend any such conference;

(3) Father-son or mother-daughter activities at an educational institution or in an education program or activity, but if such activities are provided for students of one sex, opportunities for reasonably comparable activities shall be provided to students of the other sex;

(4) Any scholarship or other financial assistance awarded by an institution of higher education to an individual because such individual has received such award in a single-sex pageant based upon a combination of factors related to the individual's personal appearance, poise, and talent. The pageant, however, must comply with other nondiscrimination provisions of Federal law.

(c) *Program or activity* or *program* means:

(1) All of the operations of any entity described in paragraphs (c)(1)(i) through (iv) of this section, any part of which is extended Federal financial assistance:

(i)(A) A department, agency, special purpose district, or other instrumentality of a State or of a local government; or

(B) The entity of such State or local government that distributes such assistance and each such department or agency (and each other State or local government entity) to which the assistance is extended, in the case of assistance to a State or local government;

(ii)(A) A college, university, or other post-secondary institution, or a public system of higher education; or

(B) A local educational agency (as defined in section 8801 of title 20), system of vocational education, or other school system;

(iii)(A) An entire corporation, partnership, or other private organization, or an entire sole proprietorship—

(*1*) If assistance is extended to such corporation, partnership, private organization, or sole proprietorship as a whole; or

(*2*) Which is principally engaged in the business of providing education, health care, housing, social services, or parks and recreation; or

(B) The entire plant or other comparable, geographically separate facility to which Federal financial assistance is extended, in the case of any other corporation, partnership, private organization, or sole proprietorship; or

(iv) Any other entity that is established by two or more of the entities described in paragraphs (c)(1)(i), (ii), or (iii) of this section.

(2)(i) *Program or activity* does not include any operation of an entity that is controlled by a religious organization if the application of 20 U.S.C. 1681 to such operation would not be consistent with the religious tenets of such organization.

(ii) For example, all of the operations of a college, university, or other post-secondary institution, including but not limited to traditional educational operations, faculty and student housing, campus shuttle bus service, campus restaurants, the bookstore, and other commercial activities are part of a ''program or activity'' subject to these Title IX regulations if the college, university, or other institution receives Federal financial assistance.

(d)(1) Nothing in these Title IX regulations shall be construed to require or prohibit any person, or public or private entity, to provide or pay for any benefit or service, including the use of facilities, related to an abortion. Medical procedures, benefits, services, and the use of facilities, necessary to save the life of a pregnant woman or to address complications related to an abortion are not subject to this section.

(2) Nothing in this section shall be construed to permit a penalty to be imposed on any person or individual because such person or individual is seeking or has received any benefit or service related to a legal abortion. Accordingly, subject to paragraph (d)(1) of this section, no person shall be excluded from participation in, be denied the benefits of, or be subjected to discrimination under any academic, extracurricular, research, occupational training, employment, or other educational program or activity operated by a recipient that receives Federal financial assistance because such individual has sought or received, or is seeking, a legal abortion, or any benefit or service related to a legal abortion.

Subpart C—Discrimination on the Basis of Sex in Admission and Recruitment Prohibited

§ 1042.300 Admission.

(a) *General.* No person shall, on the basis of sex, be denied admission, or be subjected to discrimination in admission, by any recipient to which §§ 1042.300 through 1042.310 apply, except as provided in §§ 1042.225 and 1042.230.

(b) *Specific prohibitions.* (1) In determining whether a person satisfies any policy or criterion for admission, or in making any offer of admission, a recipient to which §§ 1042.300 through 1042.310 apply shall not:

(i) Give preference to one person over another on the basis of sex, by ranking applicants separately on such basis, or otherwise;

(ii) Apply numerical limitations upon the number or proportion of persons of either sex who may be admitted; or

(iii) Otherwise treat one individual differently from another on the basis of sex.

(2) A recipient shall not administer or operate any test or other criterion for admission that has a disproportionately adverse effect on persons on the basis of sex unless the use of such test or criterion is shown to predict validly success in the education program or activity in question and alternative tests or criteria that do not have such a disproportionately adverse effect are shown to be unavailable.

(c) *Prohibitions relating to marital or parental status.* In determining whether

a person satisfies any policy or criterion for admission, or in making any offer of admission, a recipient to which §§ 1042.300 through 1042.310 apply:

(1) Shall not apply any rule concerning the actual or potential parental, family, or marital status of a student or applicant that treats persons differently on the basis of sex;

(2) Shall not discriminate against or exclude any person on the basis of pregnancy, childbirth, termination of pregnancy, or recovery therefrom, or establish or follow any rule or practice that so discriminates or excludes;

(3) Subject to § 1042.235(d), shall treat disabilities related to pregnancy, childbirth, termination of pregnancy, or recovery therefrom in the same manner and under the same policies as any other temporary disability or physical condition; and

(4) Shall not make pre-admission inquiry as to the marital status of an applicant for admission, including whether such applicant is ''Miss'' or ''Mrs.'' A recipient may make pre-admission inquiry as to the sex of an applicant for admission, but only if such inquiry is made equally of such applicants of both sexes and if the results of such inquiry are not used in connection with discrimination prohibited by these Title IX regulations.

§ 1042.305 Preference in admission.

A recipient to which §§ 1042.300 through 1042.310 apply shall not give preference to applicants for admission, on the basis of attendance at any educational institution or other school or entity that admits as students only or predominantly members of one sex, if the giving of such preference has the effect of discriminating on the basis of sex in violation of §§ 1042.300 through 1042.310.

§ 1042.310 Recruitment.

(a) *Nondiscriminatory recruitment.* A recipient to which §§ 1042.300 through 1042.310 apply shall not discriminate on the basis of sex in the recruitment and admission of students. A recipient may be required to undertake additional recruitment efforts for one sex as remedial action pursuant to § 1042.110(a), and may choose to undertake such efforts as affirmative action pursuant to § 1042.110(b).

(b) *Recruitment at certain institutions.* A recipient to which §§ 1042.300 through 1042.310 apply shall not recruit primarily or exclusively at educational institutions, schools, or entities that admit as students only or predominantly members of one sex, if such actions have the effect of discriminating on the basis of sex in violation of §§ 1042.300 through 1042.310.

Subpart D—Discrimination on the Basis of Sex in Education Programs or Activities Prohibited

§ 1042.400 Education programs or activities.

(a) *General.* Except as provided elsewhere in these Title IX regulations, no person shall, on the basis of sex, be excluded from participation in, be denied the benefits of, or be subjected to discrimination under any academic, extracurricular, research, occupational training, or other education program or activity operated by a recipient that receives Federal financial assistance. Sections 1042.400 through 1042.455 do not apply to actions of a recipient in connection with admission of its students to an education program or activity of a recipient to which §§ 1042.300 through 1042.310 do not apply, or an entity, not a recipient, to which §§ 1042.300 through 1042.310 would not apply if the entity were a recipient.

(b) *Specific prohibitions.* Except as provided in §§ 1042.400 through 1042.455, in providing any aid, benefit, or service to a student, a recipient shall not, on the basis of sex:

(1) Treat one person differently from another in determining whether such person satisfies any requirement or condition for the provision of such aid, benefit, or service;

(2) Provide different aid, benefits, or services or provide aid, benefits, or services in a different manner;

(3) Deny any person any such aid, benefit, or service;

(4) Subject any person to separate or different rules of behavior, sanctions, or other treatment;

(5) Apply any rule concerning the domicile or residence of a student or applicant, including eligibility for in-state fees and tuition;

(6) Aid or perpetuate discrimination against any person by providing significant assistance to any agency, organization, or person that discriminates on the basis of sex in providing any aid, benefit, or service to students or employees;

(7) Otherwise limit any person in the enjoyment of any right, privilege, advantage, or opportunity.

(c) *Assistance administered by a recipient educational institution to study at a foreign institution.* A recipient educational institution may administer or assist in the administration of scholarships, fellowships, or other awards established by foreign or domestic wills, trusts, or similar legal instruments, or by acts of foreign governments and restricted to members of one sex, that are designed to provide opportunities to study abroad, and that are awarded to students who are already matriculating at or who are graduates of the recipient institution; *Provided*, that a recipient educational institution that administers or assists in the administration of such scholarships, fellowships, or other awards that are restricted to members of one sex provides, or otherwise makes available, reasonable opportunities for similar studies for members of the other sex. Such opportunities may be derived from either domestic or foreign sources.

(d) *Aids, benefits or services not provided by recipient.* (1) This paragraph (d) applies to any recipient that requires participation by any applicant, student, or employee in any education program or activity not operated wholly by such recipient, or that facilitates, permits, or considers such participation as part of or equivalent to an education program or activity operated by such recipient, including participation in educational consortia and cooperative employment and student-teaching assignments.

(2) Such recipient:

(i) Shall develop and implement a procedure designed to assure itself that the operator or sponsor of such other education program or activity takes no action affecting any applicant, student, or employee of such recipient that these Title IX regulations would prohibit such recipient from taking; and

(ii) Shall not facilitate, require, permit, or consider such participation if such action occurs.

§ 1042.405 Housing.

(a) *Generally.* A recipient shall not, on the basis of sex, apply different rules or regulations, impose different fees or requirements, or offer different services or benefits related to housing, except as provided in this section (including housing provided only to married students).

(b) *Housing provided by recipient.* (1) A recipient may provide separate housing on the basis of sex.

(2) Housing provided by a recipient to students of one sex, when compared to that provided to students of the other sex, shall be as a whole:

(i) Proportionate in quantity to the number of students of that sex applying for such housing; and

(ii) Comparable in quality and cost to the student.

(c) *Other housing.* (1) A recipient shall not, on the basis of sex, administer different policies or practices concerning occupancy by its students of

housing other than that provided by such recipient.

(2)(i) A recipient which, through solicitation, listing, approval of housing, or otherwise, assists any agency, organization, or person in making housing available to any of its students, shall take such reasonable action as may be necessary to assure itself that such housing as is provided to students of one sex, when compared to that provided to students of the other sex, is as a whole:

(A) Proportionate in quantity; and

(B) Comparable in quality and cost to the student.

(ii) A recipient may render such assistance to any agency, organization, or person that provides all or part of such housing to students of only one sex.

§ 1042.410 Comparable facilities.

A recipient may provide separate toilet, locker room, and shower facilities on the basis of sex, but such facilities provided for students of one sex shall be comparable to such facilities provided for students of the other sex.

§ 1042.415 Access to course offerings.

(a) A recipient shall not provide any course or otherwise carry out any of its education program or activity separately on the basis of sex, or require or refuse participation therein by any of its students on such basis, including health, physical education, industrial, business, vocational, technical, home economics, music, and adult education courses.

(b)(1) With respect to classes and activities in physical education at the elementary school level, the recipient shall comply fully with this section as expeditiously as possible but in no event later than one year from February 20, 2001. With respect to physical education classes and activities at the secondary and post-secondary levels, the recipient shall comply fully with this section as expeditiously as possible but in no event later than three years from February 20, 2001.

(2) This section does not prohibit grouping of students in physical education classes and activities by ability as assessed by objective standards of individual performance developed and applied without regard to sex.

(3) This section does not prohibit separation of students by sex within physical education classes or activities during participation in wrestling, boxing, rugby, ice hockey, football, basketball, and other sports the purpose or major activity of which involves bodily contact.

(4) Where use of a single standard of measuring skill or progress in a physical education class has an adverse effect on members of one sex, the recipient shall use appropriate standards that do not have such effect.

(5) Portions of classes in elementary and secondary schools, or portions of education programs or activities, that deal exclusively with human sexuality may be conducted in separate sessions for boys and girls.

(6) Recipients may make requirements based on vocal range or quality that may result in a chorus or choruses of one or predominantly one sex.

§ 1042.420 Access to schools operated by LEAs.

A recipient that is a local educational agency shall not, on the basis of sex, exclude any person from admission to:

(a) Any institution of vocational education operated by such recipient; or

(b) Any other school or educational unit operated by such recipient, unless such recipient otherwise makes available to such person, pursuant to the same policies and criteria of admission, courses, services, and facilities comparable to each course, service, and facility offered in or through such schools.

§ 1042.425 Counseling and use of appraisal and counseling materials.

(a) *Counseling.* A recipient shall not discriminate against any person on the basis of sex in the counseling or guidance of students or applicants for admission.

(b) *Use of appraisal and counseling materials.* A recipient that uses testing or other materials for appraising or counseling students shall not use different materials for students on the basis of their sex or use materials that permit or require different treatment of students on such basis unless such different materials cover the same occupations and interest areas and the use of such different materials is shown to be essential to eliminate sex bias. Recipients shall develop and use internal procedures for ensuring that such materials do not discriminate on the basis of sex. Where the use of a counseling test or other instrument results in a substantially disproportionate number of members of one sex in any particular course of study or classification, the recipient shall take such action as is necessary to assure itself that such disproportion is not the result of discrimination in the instrument or its application.

(c) *Disproportion in classes.* Where a recipient finds that a particular class contains a substantially disproportionate number of individuals of one sex, the recipient shall take such action as is necessary to assure itself that such disproportion is not the result of discrimination on the basis of sex in counseling or appraisal materials or by counselors.

§ 1042.430 Financial assistance.

(a) *General.* Except as provided in paragraphs (b) and (c) of this section, in providing financial assistance to any of its students, a recipient shall not:

(1) On the basis of sex, provide different amounts or types of such assistance, limit eligibility for such assistance that is of any particular type or source, apply different criteria, or otherwise discriminate;

(2) Through solicitation, listing, approval, provision of facilities, or other services, assist any foundation, trust, agency, organization, or person that provides assistance to any of such recipient's students in a manner that discriminates on the basis of sex; or

(3) Apply any rule or assist in application of any rule concerning eligibility for such assistance that treats persons of one sex differently from persons of the other sex with regard to marital or parental status.

(b) *Financial aid established by certain legal instruments.* (1) A recipient may administer or assist in the administration of scholarships, fellowships, or other forms of financial assistance established pursuant to domestic or foreign wills, trusts, bequests, or similar legal instruments or by acts of a foreign government that require that awards be made to members of a particular sex specified therein; *Provided*, that the overall effect of the award of such sex-restricted scholarships, fellowships, and other forms of financial assistance does not discriminate on the basis of sex.

(2) To ensure nondiscriminatory awards of assistance as required in paragraph (b)(1) of this section, recipients shall develop and use procedures under which:

(i) Students are selected for award of financial assistance on the basis of nondiscriminatory criteria and not on the basis of availability of funds restricted to members of a particular sex;

(ii) An appropriate sex-restricted scholarship, fellowship, or other form of financial assistance is allocated to each student selected under paragraph (b)(2)(i) of this section; and

(iii) No student is denied the award for which he or she was selected under paragraph (b)(2)(i) of this section because of the absence of a scholarship, fellowship, or other form of financial

assistance designated for a member of that student's sex.

(c) *Athletic scholarships.* (1) To the extent that a recipient awards athletic scholarships or grants-in-aid, it must provide reasonable opportunities for such awards for members of each sex in proportion to the number of students of each sex participating in interscholastic or intercollegiate athletics.

(2) A recipient may provide separate athletic scholarships or grants-in-aid for members of each sex as part of separate athletic teams for members of each sex to the extent consistent with this paragraph (c) and § 1042.450.

§ 1042.435 Employment assistance to students.

(a) *Assistance by recipient in making available outside employment.* A recipient that assists any agency, organization, or person in making employment available to any of its students:

(1) Shall assure itself that such employment is made available without discrimination on the basis of sex; and

(2) Shall not render such services to any agency, organization, or person that discriminates on the basis of sex in its employment practices.

(b) *Employment of students by recipients.* A recipient that employs any of its students shall not do so in a manner that violates §§ 1042.500 through 1042.550.

§ 1042.440 Health and insurance benefits and services.

Subject to § 1042.235(d), in providing a medical, hospital, accident, or life insurance benefit, service, policy, or plan to any of its students, a recipient shall not discriminate on the basis of sex, or provide such benefit, service, policy, or plan in a manner that would violate §§ 1042.500 through 1042.550 if it were provided to employees of the recipient. This section shall not prohibit a recipient from providing any benefit or service that may be used by a different proportion of students of one sex than of the other, including family planning services. However, any recipient that provides full coverage health service shall provide gynecological care.

§ 1042.445 Marital or parental status.

(a) *Status generally.* A recipient shall not apply any rule concerning a student's actual or potential parental, family, or marital status that treats students differently on the basis of sex.

(b) *Pregnancy and related conditions.* (1) A recipient shall not discriminate against any student, or exclude any student from its education program or activity, including any class or extracurricular activity, on the basis of such student's pregnancy, childbirth, false pregnancy, termination of pregnancy, or recovery therefrom, unless the student requests voluntarily to participate in a separate portion of the program or activity of the recipient.

(2) A recipient may require such a student to obtain the certification of a physician that the student is physically and emotionally able to continue participation as long as such a certification is required of all students for other physical or emotional conditions requiring the attention of a physician.

(3) A recipient that operates a portion of its education program or activity separately for pregnant students, admittance to which is completely voluntary on the part of the student as provided in paragraph (b)(1) of this section, shall ensure that the separate portion is comparable to that offered to non-pregnant students.

(4) Subject to § 1042.235(d), a recipient shall treat pregnancy, childbirth, false pregnancy, termination of pregnancy and recovery therefrom in the same manner and under the same policies as any other temporary disability with respect to any medical or hospital benefit, service, plan, or policy that such recipient administers, operates, offers, or participates in with respect to students admitted to the recipient's educational program or activity.

(5) In the case of a recipient that does not maintain a leave policy for its students, or in the case of a student who does not otherwise qualify for leave under such a policy, a recipient shall treat pregnancy, childbirth, false pregnancy, termination of pregnancy, and recovery therefrom as a justification for a leave of absence for as long a period of time as is deemed medically necessary by the student's physician, at the conclusion of which the student shall be reinstated to the status that she held when the leave began.

§ 1042.450 Athletics.

(a) *General.* No person shall, on the basis of sex, be excluded from participation in, be denied the benefits of, be treated differently from another person, or otherwise be discriminated against in any interscholastic, intercollegiate, club, or intramural athletics offered by a recipient, and no recipient shall provide any such athletics separately on such basis.

(b) *Separate teams.* Notwithstanding the requirements of paragraph (a) of this section, a recipient may operate or sponsor separate teams for members of each sex where selection for such teams is based upon competitive skill or the activity involved is a contact sport. However, where a recipient operates or sponsors a team in a particular sport for members of one sex but operates or sponsors no such team for members of the other sex, and athletic opportunities for members of that sex have previously been limited, members of the excluded sex must be allowed to try out for the team offered unless the sport involved is a contact sport. For the purposes of these Title IX regulations, contact sports include boxing, wrestling, rugby, ice hockey, football, basketball, and other sports the purpose or major activity of which involves bodily contact.

(c) *Equal opportunity.* (1) A recipient that operates or sponsors interscholastic, intercollegiate, club, or intramural athletics shall provide equal athletic opportunity for members of both sexes. In determining whether equal opportunities are available, the designated agency official will consider, among other factors:

(i) Whether the selection of sports and levels of competition effectively accommodate the interests and abilities of members of both sexes;

(ii) The provision of equipment and supplies;

(iii) Scheduling of games and practice time;

(iv) Travel and per diem allowance;

(v) Opportunity to receive coaching and academic tutoring;

(vi) Assignment and compensation of coaches and tutors;

(vii) Provision of locker rooms, practice, and competitive facilities;

(viii) Provision of medical and training facilities and services;

(ix) Provision of housing and dining facilities and services;

(x) Publicity.

(2) For purposes of paragraph (c)(1) of this section, unequal aggregate expenditures for members of each sex or unequal expenditures for male and female teams if a recipient operates or sponsors separate teams will not constitute noncompliance with this section, but the designated agency official may consider the failure to provide necessary funds for teams for one sex in assessing equality of opportunity for members of each sex.

(d) *Adjustment period.* A recipient that operates or sponsors interscholastic, intercollegiate, club, or intramural athletics at the elementary school level shall comply fully with this section as expeditiously as possible but in no event later than one year from February 20, 2001. A recipient that operates or sponsors interscholastic, intercollegiate, club, or intramural

athletics at the secondary or post-secondary school level shall comply fully with this section as expeditiously as possible but in no event later than three years from February 20, 2001.

§ 1042.455 Textbooks and curricular material.

Nothing in these Title IX regulations shall be interpreted as requiring or prohibiting or abridging in any way the use of particular textbooks or curricular materials.

Subpart E—Discrimination on the Basis of Sex in Employment in Education Programs or Activities Prohibited

§ 1042.500 Employment.

(a) *General.* (1) No person shall, on the basis of sex, be excluded from participation in, be denied the benefits of, or be subjected to discrimination in employment, or recruitment, consideration, or selection therefor, whether full-time or part-time, under any education program or activity operated by a recipient that receives Federal financial assistance.

(2) A recipient shall make all employment decisions in any education program or activity operated by such recipient in a nondiscriminatory manner and shall not limit, segregate, or classify applicants or employees in any way that could adversely affect any applicant's or employee's employment opportunities or status because of sex.

(3) A recipient shall not enter into any contractual or other relationship which directly or indirectly has the effect of subjecting employees or students to discrimination prohibited by §§ 1042.500 through 1042.550, including relationships with employment and referral agencies, with labor unions, and with organizations providing or administering fringe benefits to employees of the recipient.

(4) A recipient shall not grant preferences to applicants for employment on the basis of attendance at any educational institution or entity that admits as students only or predominantly members of one sex, if the giving of such preferences has the effect of discriminating on the basis of sex in violation of these Title IX regulations.

(b) *Application.* The provisions of §§ 1042.500 through 1042.550 apply to:

(1) Recruitment, advertising, and the process of application for employment;

(2) Hiring, upgrading, promotion, consideration for and award of tenure, demotion, transfer, layoff, termination, application of nepotism policies, right of return from layoff, and rehiring;

(3) Rates of pay or any other form of compensation, and changes in compensation;

(4) Job assignments, classifications, and structure, including position descriptions, lines of progression, and seniority lists;

(5) The terms of any collective bargaining agreement;

(6) Granting and return from leaves of absence, leave for pregnancy, childbirth, false pregnancy, termination of pregnancy, leave for persons of either sex to care for children or dependents, or any other leave;

(7) Fringe benefits available by virtue of employment, whether or not administered by the recipient;

(8) Selection and financial support for training, including apprenticeship, professional meetings, conferences, and other related activities, selection for tuition assistance, selection for sabbaticals and leaves of absence to pursue training;

(9) Employer-sponsored activities, including social or recreational programs; and

(10) Any other term, condition, or privilege of employment.

§ 1042.505 Employment criteria.

A recipient shall not administer or operate any test or other criterion for any employment opportunity that has a disproportionately adverse effect on persons on the basis of sex unless:

(a) Use of such test or other criterion is shown to predict validly successful performance in the position in question; and

(b) Alternative tests or criteria for such purpose, which do not have such disproportionately adverse effect, are shown to be unavailable.

§ 1042.510 Recruitment.

(a) *Nondiscriminatory recruitment and hiring.* A recipient shall not discriminate on the basis of sex in the recruitment and hiring of employees. Where a recipient has been found to be presently discriminating on the basis of sex in the recruitment or hiring of employees, or has been found to have so discriminated in the past, the recipient shall recruit members of the sex so discriminated against so as to overcome the effects of such past or present discrimination.

(b) *Recruitment patterns.* A recipient shall not recruit primarily or exclusively at entities that furnish as applicants only or predominantly members of one sex if such actions have the effect of discriminating on the basis of sex in violation of §§ 1042.500 through 1042.550.

§ 1042.515 Compensation.

A recipient shall not make or enforce any policy or practice that, on the basis of sex:

(a) Makes distinctions in rates of pay or other compensation;

(b) Results in the payment of wages to employees of one sex at a rate less than that paid to employees of the opposite sex for equal work on jobs the performance of which requires equal skill, effort, and responsibility, and that are performed under similar working conditions.

§ 1042.520 Job classification and structure.

A recipient shall not:

(a) Classify a job as being for males or for females;

(b) Maintain or establish separate lines of progression, seniority lists, career ladders, or tenure systems based on sex; or

(c) Maintain or establish separate lines of progression, seniority systems, career ladders, or tenure systems for similar jobs, position descriptions, or job requirements that classify persons on the basis of sex, unless sex is a bona fide occupational qualification for the positions in question as set forth in § 1042.550.

§ 1042.525 Fringe benefits.

(a) *''Fringe benefits'' defined.* For purposes of these Title IX regulations, *fringe benefits* means: Any medical, hospital, accident, life insurance, or retirement benefit, service, policy or plan, any profit-sharing or bonus plan, leave, and any other benefit or service of employment not subject to the provision of § 1042.515.

(b) *Prohibitions.* A recipient shall not:

(1) Discriminate on the basis of sex with regard to making fringe benefits available to employees or make fringe benefits available to spouses, families, or dependents of employees differently upon the basis of the employee's sex;

(2) Administer, operate, offer, or participate in a fringe benefit plan that does not provide for equal periodic benefits for members of each sex and for equal contributions to the plan by such recipient for members of each sex; or

(3) Administer, operate, offer, or participate in a pension or retirement plan that establishes different optional or compulsory retirement ages based on sex or that otherwise discriminates in benefits on the basis of sex.

§ 1042.530 Marital or parental status.

(a) *General.* A recipient shall not apply any policy or take any employment action:

(1) Concerning the potential marital, parental, or family status of an

employee or applicant for employment that treats persons differently on the basis of sex; or

(2) Which is based upon whether an employee or applicant for employment is the head of household or principal wage earner in such employee's or applicant's family unit.

(b) *Pregnancy.* A recipient shall not discriminate against or exclude from employment any employee or applicant for employment on the basis of pregnancy, childbirth, false pregnancy, termination of pregnancy, or recovery therefrom.

(c) *Pregnancy as a temporary disability.* Subject to § 1042.235(d), a recipient shall treat pregnancy, childbirth, false pregnancy, termination of pregnancy, recovery therefrom, and any temporary disability resulting therefrom as any other temporary disability for all job-related purposes, including commencement, duration, and extensions of leave, payment of disability income, accrual of seniority and any other benefit or service, and reinstatement, and under any fringe benefit offered to employees by virtue of employment.

(d) *Pregnancy leave.* In the case of a recipient that does not maintain a leave policy for its employees, or in the case of an employee with insufficient leave or accrued employment time to qualify for leave under such a policy, a recipient shall treat pregnancy, childbirth, false pregnancy, termination of pregnancy, and recovery therefrom as a justification for a leave of absence without pay for a reasonable period of time, at the conclusion of which the employee shall be reinstated to the status that she held when the leave began or to a comparable position, without decrease in rate of compensation or loss of promotional opportunities, or any other right or privilege of employment.

§ 1042.535 Effect of state or local law or other requirements.

(a) *Prohibitory requirements.* The obligation to comply with §§ 1042.500 through 1042.550 is not obviated or alleviated by the existence of any State or local law or other requirement that imposes prohibitions or limits upon employment of members of one sex that are not imposed upon members of the other sex.

(b) *Benefits.* A recipient that provides any compensation, service, or benefit to members of one sex pursuant to a State or local law or other requirement shall provide the same compensation, service, or benefit to members of the other sex.

§ 1042.540 Advertising.

A recipient shall not in any advertising related to employment indicate preference, limitation, specification, or discrimination based on sex unless sex is a bona fide occupational qualification for the particular job in question.

§ 1042.545 Pre-employment inquiries.

(a) *Marital status.* A recipient shall not make pre-employment inquiry as to the marital status of an applicant for employment, including whether such applicant is ''Miss'' or ''Mrs.''

(b) *Sex.* A recipient may make pre-employment inquiry as to the sex of an applicant for employment, but only if such inquiry is made equally of such applicants of both sexes and if the results of such inquiry are not used in connection with discrimination prohibited by these Title IX regulations.

§ 1042.550 Sex as a bona fide occupational qualification.

A recipient may take action otherwise prohibited by §§ 1042.500 through 1042.550 provided it is shown that sex is a bona fide occupational qualification for that action, such that consideration of sex with regard to such action is essential to successful operation of the employment function concerned. A recipient shall not take action pursuant to this section that is based upon alleged comparative employment characteristics or stereotyped characterizations of one or the other sex, or upon preference based on sex of the recipient, employees, students, or other persons, but nothing contained in this section shall prevent a recipient from considering an employee's sex in relation to employment in a locker room or toilet facility used only by members of one sex.

Subpart F—Other Provisions

§ 1042.600 Covered programs.

The financial assistance programs to which this part applies are listed in Appendix A to 10 CFR part 1040.

§ 1042.605 Enforcement procedures.

The investigative, compliance, and enforcement procedural provisions of Title VI of the Civil Rights Act of 1964 (42 U.S.C. 2000d) are hereby adopted and applied to these Title IX regulations. These procedures may be found at 10 CFR part 1040, subparts G and H.

[FR Doc. 01–583 Filed 1–17–01; 8:45 am]

BILLING CODE 6450–01–P

DEPARTMENT OF ENERGY

10 CFR Part 1044

[Docket No. SO–RM–00–3164]

RIN 1992–AA26

Office of Security and Emergency Operations; Security Requirements for Protected Disclosures Under Section 3164 of the National Defense Authorization Act for Fiscal Year 2000

AGENCY: Department of Energy.

ACTION: Interim final rule and opportunity for public comment.

SUMMARY: The Department of Energy (DOE) is publishing an interim final rule to prescribe the security procedures that a DOE employee or DOE contractor employee, including an employee or contractor employee of the National Nuclear Security Administration, who is engaged in defense activities must follow to make a protected disclosure of classified or other controlled information under the whistleblower protection provisions in section 3164 of the National Defense Authorization Act for Fiscal Year 2000. Anyone who follows these procedures when making a disclosure of classified or other controlled information may not be discharged, demoted, or otherwise discriminated against as a reprisal for making the disclosure.

EFFECTIVE DATE: The interim final rule is effective February 20, 2001. Interested persons may submit written comments on this interim rule by February 20, 2001. Comments received after this date will be considered to the extent practicable.

ADDRESSES: Written comments (3 copies) should be addressed to: U.S. Department of Energy, Docket No. SO–RM–00–3164, Attn: Richard Farman, Office of General Counsel, GC–74, 1000 Independence Ave., SW., Washington, DC 20585.

All comments received will be available for public inspection as part of the administrative record on file for this rulemaking in the Department of Energy Freedom of Information Office Reading Room, Room 1E–090, Forrestal Building, 1000 Independence Avenue, S.W, Washington, DC 10585, (202) 586–6020, between 9 a.m. and 4 p.m., Monday through Friday, except Federal holidays. The docket material for this rulemaking will be filed under Docket No. SO–RM–00–3164.

FOR FURTHER INFORMATION CONTACT: Cathy Tullis, Office of Security and Emergency Operations (SO–211), U.S. Department of Energy, 19901

Germantown Road, Germantown, MD 20874–1290, (301) 903–4805.

SUPPLEMENTARY INFORMATION:

I. Introduction

Today's notice adds a new Part 1044 to Title 10 of the Code of Federal Regulations to establish security requirements for the disclosure of classified and other controlled information under section 3164 of the National Defense Authorization Act for Fiscal Year 2000 (NDAA for FY 2000) (42 U.S.C. 7239). Section 3164 directs the Secretary of Energy to establish a program to ensure that DOE employees or DOE contractor employees engaged in defense activities may not be discharged, demoted, or otherwise discriminated against as a reprisal for making protected disclosures. The Secretary is required by section 3164(g) to prescribe regulations to ensure the security of any information disclosed under the program (42 U.S.C. 7239(g)). To qualify as a ''protected disclosure' of classified or other controlled information, a covered employee must take appropriate steps to protect the security of the information in accordance with guidance provided by the DOE Inspector General, and reveal the information only to a person or entity specified in the statute (42 U.S.C. 7239(c)).

Section 3164(j) of the NDAA for FY 2000 provides that complaints of discriminatory acts taken in reprisal for making a protected disclosure may be submitted to the DOE Office of Hearings and Appeals for investigation (42 U.S.C. 7239(j)). Section 3164(k) directs the Secretary of Energy to take appropriate actions to abate acts of reprisal (42 U.S.C. 7239(k)).

II. Discussion of Rule Provisions

Part 1044 informs DOE and DOE contractor employees engaged in defense activities how to make a protected disclosure of classified and other controlled information. The definitions in section 1044.03 of ''classified information'' and ''contractor'' are drawn from 10 CFR Part 1045, ''Nuclear Classification and Declassification.'' The same definitions apply to this rule because of the similar subject matter. DOE defines ''defense activities'' to cover the range of its defense activities carried out under the Atomic Energy Act of 1954 (42 U.S.C. 2011 *et seq.*). The definition of ''defense activities'' in section 1044.03 is consistent with the definition of ''Atomic Energy Defense Programs'' in DOE's regulations concerning protection of unclassified controlled nuclear information (see 10 CFR 1017.3). All Departmental-related activities involving classified information and Unclassified Controlled Nuclear Information are considered to be ''defense activities'' covered by this rule.

The term ''unclassified controlled nuclear information'' is defined in section 1044.03, and used in conjunction with ''classified information'' throughout the rule to identify the types of information that are covered by the protected disclosure provisions of section 3164 of the NDAA for FY2000. For reasons that follow, DOE has concluded that unclassified controlled nuclear information under section 148 of the Atomic Energy Act (42 U.S.C. 2168) is the only type of information that falls within the meaning of ''other information'' in the phrase ''classified or other information'' used in section 3164(c)(3) to define ''protected disclosures.''

DOE's interpretation of ''other information'' in section 3164 is consistent with the apparent intent of Congress to cover the disclosure of controlled information. Under section 3164(g), DOE is required to prescribe regulations to ensure the security of any information disclosed under the statute. Other provisions impose an obligation on a whistleblower to take appropriate steps to protect the security of the information to be disclosed (section 3164(c)(1)), and restrict who may receive a disclosure of classified or other information (section 3164(d)). These provisions would not make sense if ''other information'' encompassed uncontrolled information. The legislative history also shows that Congress intended to address in section 3164 the disclosure of national security sensitive information. See Conference Report on the National Defense Authorization Act for Fiscal Year 2000, H.R. Conf. Rep. No. 106–301, at p. 920.

Section 1044.06 lists the persons and entities that may receive a protected disclosure (42 U.S.C. 7239(d)). Section 1044.07 provides that the Inspector General will assist the whistleblower by obtaining from the Office of Safeguards and Security a determination whether a particular person has the appropriate security access authorization to receive the classified or other controlled information.

Sections 1044.08 and 1044.09 provide that a person who wishes to make a protected disclosure must submit the information to the Inspector General, who in turn will obtain a determination from the Office of Nuclear and National Security Information on the security classification, if any, of the information. If the information is classified or controlled, section 1044.11 provides that the whistleblower must follow applicable security requirements concerning how to generate, mark, reproduce, store, destroy, and transmit classified and other controlled information. These security requirements derive from Executive Orders, DOE regulations, and current security directives issued by the Office of Safeguards and Security. The Inspector General will provide the whistleblower with guidance on how to comply with these requirements. The individual has a responsibility to obtain assistance and guidance before seeking to make a protected disclosure.

As required by the NDAA for FY 2000, DOE provides in section 1044.09 that the identity of a whistleblower under this program will be protected (42 U.S.C. 7239(f)(3)). Section 1044.12 describes the procedures provided in the statute (42 U.S.C. 7239(i)–(k)) for acting on complaints of alleged discrimination against employees as reprisal for making protected disclosures.

III. Public Comment

The interim final rule published today prescribes security procedures that DOE and DOE contractor employees must follow to make a protected disclosure of classified or other controlled information under section 3164(g) of the NDAA for FY 2000. As a rule of agency procedure, this rulemaking is exempt from the notice and comment requirements in the Administrative Procedure Act, 5 U.S.C. 553. DOE, nevertheless, is providing an opportunity for interested persons to submit written data and views on the interim rule. Interested persons should submit their comments to the address indicated in the **ADDRESSES** section of this notice. The outside of the envelope and the comments should be labeled as follows: ''Protected Disclosure Rulemaking, Docket No. SO–RM–00–3164.'' If you believe that any information or data you submit may be exempt from public disclosure by law, you should submit one complete copy as well as one copy from which you have deleted the information you believe to be exempt from disclosure. The Department will determine if the information or data is exempt from disclosure.

All comments received will be available for public inspection as part of the administrative record on file for this rulemaking in the Department of Energy Freedom of Information Office Reading Room, Room 1E–090, Forrestal Building, 1000 Independence Avenue, SW., Washington, DC 20585, (202) 586–

6020, between 9 a.m. and 4 p.m., Monday through Friday, except Federal holidays.

IV. Procedural Requirements

A. Review Under Executive Order 12866

Today's regulatory action has been determined not to be ''a significant regulatory action'' under Executive Order 12866, ''Regulatory Planning and Review,'' (58 FR 51735, October 4, 1993). Accordingly, this action was not subject to review under that Executive Order by the Office of Information and Regulatory Affairs of the Office of Management and Budget (OMB).

B. Review Under the Regulatory Flexibility Act

The Regulatory Flexibility Act of 1980 (5 U.S.C. 601 *et seq.*) requires preparation of an initial regulatory flexibility analysis for any rule that by law must be proposed for public comment, unless the agency certifies that the rule will not have a ''significant economic impact on a substantial number of small entities.'' Today's interim final rule prescribes the security procedures that a DOE or DOE contractor employee engaged in defense activities must follow when making a protected disclosure of classified or other controlled information under section 3164 of the NDAA for FY 2000. DOE is not required by the Administrative Procedure Act (5 U.S.C. 553) or any other law to propose this rule for public comment. Accordingly, the Regulatory Flexibility Act requirements do not apply to this rulemaking, and no regulatory flexibility analysis has been prepared.

C. Review Under the Paperwork Reduction Act

No additional information or record keeping requirements are imposed by this rulemaking. Accordingly, no OMB clearance is required under the Paperwork Reduction Act (44 U.S.C. 3501 *et seq.*).

D. Review Under the National Environmental Policy Act

Today's rule describes the security requirements a DOE or DOE contractor employee engaged in defense activities must follow when making a protected disclosure of classified or other controlled information under section 3164 of the NDAA for FY 2000. Implementation of this rule will not affect whether such information might cause or otherwise be associated with an environmental impact. The Department has, therefore, determined that this rule is covered under the Categorical Exclusion found at paragraph A.6. of Appendix A to Subpart D, 10 CFR Part 1021, which applies to rulemakings that are strictly procedural. Accordingly, neither an environmental assessment nor an environmental impact statement is required.

E. Review Under Executive Order 12988

With respect to the review of existing regulations and the promulgation of new regulations, section 3(a) of Executive Order 12988, ''Civil Justice Reform,'' (61 FR 4729, February 7, 1996), imposes on Federal agencies the general duty to adhere to the following requirements: (1) Eliminate drafting errors and ambiguity; (2) write regulations to minimize litigation; and (3) provide a clear legal standard for affected conduct rather than a general standard and promote simplification and burden reduction. With regard to the review required by section 3(a), section 3(b) of Executive Order 12988 specifically requires that Executive agencies make every reasonable effort to ensure that the regulation: (1) Clearly specifies the preemptive effect, if any; (2) clearly specifies any effect on existing Federal law or regulation; (3) provides a clear legal standard for affected conduct while promoting simplification and burden reduction; (4) specifies the retroactive effect, if any; (5) adequately defines key terms; and (6) addresses other important issues affecting clarity and general draftsmanship under any guidelines issued by the Attorney General. Section 3(c) of Executive Order 12988 requires Executive agencies to review regulations in light of applicable standards in section 3(a) and section 3(b) to determine whether they are met or it is unreasonable to meet one or more of them. DOE has completed the required review and determined that, to the extent permitted by law, this interim final rule meets the relevant standards of Executive Order 12988.

F. Review Under Executive Order 13132

Executive Order 13132 (64 FR 43255, August 10, 1999) requires agencies to develop an accountable process to ensure meaningful and timely input by State and local officials in the development of regulatory policies that have federalism implications. DOE published its intergovernmental consultation policy and procedures on March 14, 2000 (65 FR 13735). ''Policies that have federalism implications'' is defined in the Executive Order to include regulations that have substantial direct effects on the States, on the relationship between the national government and the States, or on the distribution of power and responsibilities among the various levels of government. DOE has examined this interim final rule and has determined that it would not have a substantial direct effect on the States, on the relationship between the national government and the States, or on the distribution of power and responsibilities among the various levels of government. No further action is required by Executive Order 13132.

G. Review Under the Unfunded Mandates Reform Act of 1995

Title II of the Unfunded Mandates Reform Act of 1995 (Pub. L. 104–4) requires each federal agency to prepare a written assessment of the effects of any federal mandate in a proposed or final agency rule that may result in the expenditure by State, local, and tribal governments, in the aggregate, or by the private sector, of $100 million in any one year. The Act also requires a federal agency to develop an effective process to permit timely input by elected officers of State, local, and tribal governments on a proposed ''significant intergovernmental mandate,'' and requires an agency plan for giving notice and opportunity to timely input to potentially affected small governments before establishing any requirements that might significantly or uniquely affect small governments. DOE's intergovernmental consultation process under the Unfunded Mandates Reform Act of 1995 is described in a statement of policy published by DOE on March 18, 1997 (62 FR 12820). The interim final rule published today does not contain any federal mandate, so these requirements do not apply.

H. Review Under Plain Language Initiative

Executive Order 12866 and the President's memorandum of June 1, 1998, require each agency to write all rules in plain language. We invite your comments on how to make this rule easier to understand. For example:

- Have we organized the material to suit your needs?
- Are the requirements in the rule clearly stated?
- Does the rule contain technical language or jargon that isn't clear?
- Would a different format make the rule easier to understand?
- What else could we do to make the rule easier to understand?

I. Congressional Notification

As required by 5 U.S.C. 801, DOE will report to Congress promulgation of the interim final rule prior to its effective date. The report will state that it has been determined that the rule is not a

''major rule'' as defined by 5 U.S.C. 804(2).

List of Subjects in 10 CFR Part 1044

Administrative practice and procedure, Classfied information, Energy, Government contracts, National security information, Security information, Whistleblowing

Issued in Washington, DC, on November 30, 2000.

T.J. Glauthier,

Deputy Secretary.

For the reasons set forth in the preamble, DOE hereby amends Chapter X of title 10 of the Code of Federal Regulations as set forth below:

1. New Part 1044 is added to read as follows:

PART 1044—SECURITY REQUIREMENTS FOR PROTECTED DISCLOSURES UNDER SECTION 3164 OF THE NATIONAL DEFENSE AUTHORIZATION ACT FOR FISCAL YEAR 2000

Sec.

1044.01 What is the purpose of this part?
1044.02 Who must follow the requirements contained in this part?
1044.03 What definitions apply to this part?
1044.04 What is a protected disclosure?
1044.05 What is the effect of a disclosure qualifying as a ''protected disclosure''?
1044.06 Who may receive a protected disclosure?
1044.07 How can you find out if a particular person is authorized to receive a protected disclosure?
1044.08 Do you have to submit the documents for classification review before you give them to someone?
1044.09 What do you do if you plan to disclose classified or unclassified controlled nuclear information orally rather than by providing copies of documents?
1044.10 Will your identity be protected?
1044.11 How do you protect the documents and information that you want to disclose?
1044.12 What procedures can you invoke if you believe you have been discharged, demoted, or otherwise discriminated against as a reprisal for making a protected disclosure?

Authority: 42 U.S.C. 7101 et seq., 7239, and 50 U.S.C. 2401 *et seq.*

§ 1044.01 What is the purpose of this part?

This part prescribes the security requirements for making protected disclosures of classified or unclassified controlled nuclear information under the whistleblower protection provisions of section 3164 of the National Defense Authorization Act for Fiscal Year 2000.

§ 1044.02 Who must follow the requirements contained in this part?

The requirements apply to you if you are:

(a) An employee of DOE, including the National Nuclear Security Administration, or one of its contractors;

(b) Engaged in DOE defense activities; and

(c) Wish to make a protected disclosure as described in § 1044.04 of this part.

§ 1044.03 What definitions apply to this part?

The following definitions apply to this subpart:

Atomic Energy Act means the Atomic Energy Act of 1954, as amended (42 U.S.C. 2011 et seq.

Classified information means:

(1) Information classified as Restricted Data or Formerly Restricted Data under the Atomic Energy Act; or

(2) Information that has been determined pursuant to Executive Order 12958 or prior Executive Orders to require protection against unauthorized disclosure and is marked to indicate its classification status when in document form (also referred to as ''National Security Information'' in 10 CFR Part 1045 or ''defense information'' in the Atomic Energy Act).

Contractor means any industrial, educational, commercial or other entity, grantee or licensee at any tier, including an individual, that has executed an agreement with the Federal Government for the purpose of performing under a contract, license or other agreement.

Defense activities means activities of DOE engaged in support of:

(1) The production, testing, sampling, maintenance, repair, modification, assembly, disassembly, utilization, transportation, or retirement of nuclear weapons or components of nuclear weapons;

(2) The production, utilization, or transportation of nuclear material for military applications; or

(3) The safeguarding of activities, equipment, or facilities which support the production of nuclear weapons or nuclear material for nuclear weapons.

DOE means the Department of Energy, including the National Nuclear Security Administration.

Unclassified controlled nuclear information means unclassified government information prohibited from unauthorized dissemination under section 148 of the Atomic Energy Act and DOE implementing regulations in 10 CFR part 1017.

§ 1044.04 What is a protected disclosure?

A protected disclosure is:

(a) A disclosure of classified or unclassified controlled nuclear information that you reasonably believe provides direct and specific evidence of—

(1) A violation of law or Federal regulation;

(2) Gross mismanagement, a gross waste of funds, or an abuse of authority; or

(3) A false statement to Congress on pursuant to an issue of material fact; and

(b) Protected pursuant to the procedures in this part, including the security procedures referenced in § 1044.11; and

(c) Revealed only to a person or organization described in § 1044.06.

§ 1044.05 What is the effect of a disclosure qualifying as a ''protected disclosure''?

If a DOE or DOE contractor employee follows the procedures of this part when making a disclosure of classified or unclassified controlled nuclear information, then the employer (DOE or DOE contractor as applicable) may not discharge, demote, or otherwise discriminate against the employee as a reprisal for making the disclosure.

§ 1044.06 Who may receive a protected disclosure?

The following persons or organizations may receive a protected disclosure:

(a) A member of a committee of Congress having primary responsibility for oversight of the department, agency, or element of the Government to which the disclosed information relates;

(b) An employee of Congress who is a staff member of such a committee and has an appropriate security access authorization for the information being disclosed;

(c) The Inspector General of the Department of Energy;

(d) The Federal Bureau of Investigation; or

(e) Any other element of the Government designated by the Secretary of Energy as authorized to receive the information being disclosed.

§ 1044.07 How can you find out if a particular person is authorized to receive a protected disclosure?

You must contact the Department of Energy Inspector General for help in determining whether a particular person is authorized to receive the classified or unclassified controlled nuclear information you wish to disclose. The Inspector General will contact the Office of Safeguards and Security as necessary to determine the security access authorization of the person to receive the protected disclosure.

§ 1044.08 Do you have to submit the documents for classification review before you give them to someone?

Yes, you must submit each document with a classification or control marking and any unmarked document generated in a classified or controlled subject area to the Inspector General. The Inspector General forwards each document to the Office of Nuclear and National Security Information for a determination as to whether the information in the document is properly classified, controlled, or may be released to the public.

§ 1044.09 What do you do if you plan to disclose classified or unclassified controlled nuclear information orally rather than by providing copies of documents?

You must describe in detail to the Inspector General what information you wish to disclose. The Inspector General may require that the information to be disclosed be put in writing in order to ensure the Inspector General obtains and provides accurate advice. The Inspector General will consult with the Office of Nuclear and National Security Information who will provide you with advice, through the Inspector General, as to whether the information is classified or controlled and any steps needed to protect the information.

§ 1044.10 Will your identity be protected?

Yes, both the Inspector General and the Office of Nuclear and National Security Information must protect, consistent with legal requirements, your identity and any information about your disclosure.

§ 1044.11 How do you protect the information that you want to disclose?

To protect classified information and unclassified controlled nuclear information you plan to disclose, you must:

(a) Only disclose the information to personnel who possess the appropriate clearance and need-to-know for the information disclosed as required in 10 CFR part 710, after verifying any special authorizations or accesses, such as Sensitive Compartmented Information, Special Access Program, and Weapon Data information;

(b) Use only equipment (such as computers or typewriters) that is approved for classified processing for the generation of classified documents;

(c) Mark documents as required by 10 CFR part 1045 (classified information), 10 CFR Part 1017 (unclassified controlled nuclear information), or as required by the Office of Nuclear and National Security Information.

(d) Use only approved copiers to reproduce documents;

(e) Store classified documents in facilities approved by the U.S. Government for the storage of classified material;

(f) Use only approved destruction devices to destroy classified documents;

(g) Use only appropriate secure means, such as secure facsimile or secure telephone, to provide classified information orally or electronically when transmitting or communicating that information (e.g. the applicable classified mailing address); and

(h) Follow any additional specific instructions from the Office of Safeguards and Security on how to protect the information.

§ 1044.12 What procedures can you invoke if you believe you have been discharged, demoted, or otherwise discriminated against as a reprisal for making a protected disclosure?

If you believe you have been discriminated against as a reprisal for making a protected disclosure, you may submit a complaint to the Director of the Office of Hearings and Appeals, U.S. Department of Energy, 1000 Independence Avenue, SW., Washington, DC 20585–0107, or you may send your complaint to the Director, Office of Hearings and Appeals, by facsimile to FAX number (202) 426–1415. In your complaint, you should give your reasons for believing that you have been discriminated against as a reprisal for making a protected disclosure, and include any information you think is relevant to your complaint. The Office of Hearings and Appeals will conduct an investigation of your complaint unless the Director determines your complaint is frivolous. The Director will notify you in writing if your complaint is found to be frivolous. If an investigation is conducted, the Director will submit a report of the investigation to you, to the employer named in your complaint, and to the Secretary of Energy, or the Secretary's designee. The Secretary, or the Secretary's designee, will take appropriate action, pursuant to 42 U.S.C. 7239(k), to abate any discriminatory actions taken as reprisal for making a protected disclosure.

[FR Doc. 01–1328 Filed 1–17–01; 8:45 am]

BILLING CODE 6450–01–P

SMALL BUSINESS ADMINISTRATION

13 CFR Part 126

HUBZone Program

AGENCY: Small Business Administration.

ACTION: Final rule.

SUMMARY: This final rule amends the regulations governing the HUBZone Empowerment Contracting Program (HUBZone program). In particular, this rule clarifies the application of the HUBZone program to state and local governments, revises the definition of the term ''principal office,'' eliminates the program eligibility restrictions on allowable affiliations of HUBZone small business concerns, and eases the program eligibility requirements and procurement restrictions concerning qualified HUBZone small business concerns that operate as non-manufacturers.

DATES: This rule is effective on February 20, 2001.

FOR FURTHER INFORMATION CONTACT: Michael McHale, Associate Administrator for the HUBZone Program, (202) 205–6731 or hubzone@sba.gov.

SUPPLEMENTARY INFORMATION: On October 3, 2000, the Small Business Administration (SBA) published in the **Federal Register**, 65 FR 58963, a proposed rule to amend its regulations governing the HUBZone program. The rule proposed to update the list of Federal agencies covered by the HUBZone program and clarify that the program does not apply to contracts awarded by state and local governments. In addition, the rule proposed to amend the definition of the term principal office to accommodate service and construction concerns, and to eliminate the program eligibility restrictions on allowable affiliations of HUBZone small business concerns (SBCs). Finally, the rule proposed to ease the program eligibility requirements and procurement restrictions concerning qualified HUBZone small business concerns that operate as non-manufacturers. The proposed regulatory amendments were intended to improve the efficiency and effectiveness of the program in light of SBA's experience since the effective date of the final regulations implementing the HUBZone Act of 1997, Title VI of the Small Business Reauthorization Act of 1997, Public Law 105–135.

Discussion of Comments on the Proposed Rule

SBA received 22 timely comments concerning the proposed amendments. The vast majority of the comments supported the proposed regulatory amendments and applauded SBA's efforts to improve and clarify the HUBZone regulations. In addition to expressing support for the amendments, a few commenters also recommended some modifications to two of the

proposed amendments. As discussed below, SBA carefully considered the comments and recommendations in developing this final rule. SBA received a few comments addressing other sections of the HUBZone regulations. Because this final rule does not involve any of those sections, SBA does not discuss those comments here but will consider them for future amendments to the HUBZone regulations.

Four comments addressed SBA's proposal to revise § 126.101, to add three additional Federal agencies to the list of agencies covered by the HUBZone Act and to clarify that the program does not apply to state and local governments. Three of those comments supported those amendments. One of the four commenters, however, pointed out that Section 212 of Public Law 106–113, which extended the HUBZone program to the three Federal agencies that SBA proposed to add to the list, was effective for the fiscal year ending September 30, 2000. That commenter also noted that although the current § 126.101(b) makes clear that after September 30, 2000, the HUBZone program applies to all federal agencies that hire one or more contracting officers, it may be useful to retain the current list of covered agencies under § 126.101(a) because it spells out the program's applicability to HUBZone contracts awarded prior to September 30, 2000. SBA concurs with that recommendation and therefore has retained the original § 126.101(a) without change and has adopted in full a new paragraph (c) to § 126.101, as proposed on October 3, 2000.

The comments concerning the definition of ''principle office,'' were all supportive of the proposed amendment of that definition in § 126.103. Under the proposed definition, ''principle office'' would continue to be defined as the location where the greatest number of the concern's employees perform their work, except that for concerns whose primary industry is service or construction, the determination of ''principal office'' would exclude the concern's employees who perform their work at separate job-site locations to fulfill specific contract obligations.

In the preamble to the proposed rule, SBA specifically requested public comments on the proposed employee exclusion provision for the construction and service industries. Responding commenters strongly supported that exclusion for firms engaged in the construction and service industries. They agreed that the current definition of ''principal office'' is appropriate for manufacturing concerns, because such firms tend to operate with fixed plant, equipment and personnel tied to one location, but that it did not make sense for service or construction industries. Accordingly, this final rule adopts the definition of ''principal office'' as proposed.

With one notable exception, commenters likewise endorsed the proposed amendment of § 126.204, to eliminate the current restriction on allowable affiliations of HUBZone SBCs to other qualified HUBZone SBCs, 8(a) Business Development program participants and women-owned small businesses. The one objecting commenter expressed concern that the proposed change would make it easier for large businesses to set up ''store-front'' affiliates to abuse the program. SBA disagrees. The proposed amendment to § 126.204 makes clear that the size of the HUBZone SBCs when combined with the size of all its affiliates must qualify as small under part 121 of title 13 of the Code of Federal Regulations. That requirement safeguards against possible abuse by large businesses in that regard.

Although supporting the proposed elimination of the existing restrictions on allowable affiliations, another commenter recommended that SBA relax the requirements of § 126.204 further by revising the directive for aggregating the size of the HUBZone SBC and its affiliates. That commenter suggested that SBA should only aggregate the ''business activity resulting from'' the affiliation. SBA declines to accept that recommendation. Given the broad definition of affiliation under § 121.103 of title 13 of the Code of Federal Regulations, it is not feasible to aggregate only the ''business activity resulting from'' the affiliation. Further, combining the size of a HUBZone concern with all its affiliates is consistent with governing size regulations under part 121, and does not impose undue burden on otherwise qualified HUBZone SBCs. SBA believes that a finding of affiliation should have the same consequences in each of SBA's programs. In other words, a finding of affiliation causes SBA to aggregate all of the receipts or employees of each of the affiliates. SBA does not look only at certain types of receipts of a firm's affiliates, but rather, combines all receipts of an affiliate from whatever source. SBA believes that that general rule is equally applicable to the HUBZone program. Consequently, the requirement for aggregating the size of a HUBZone SBC and all its affiliates is retained in this final rule.

Finally, SBA received several comments which were supportive of the proposed amendment to § 126.206 to eliminate the eligibility requirement that a non-manufacturer demonstrate that it can provide products manufactured by a qualified HUBZone SBC, and the proposed amendment to § 126.601(d) to allow qualified HUBZone SBCs that are non-manufacturers to supply the product of any business for HUBZone contracts at or below $25,000 in total value. Three of those commenters, however, requested that SBA adopt a higher maximum threshold of as high as $100,000 and $250,000. SBA does not believe that an increase in the proposed $25,000 threshold is justified at this time, since it would unfairly impact qualified HUBZone SBCs that are manufacturers. The $25,000 threshold also parallels the regulatory scheme of the Federal Acquisition Regulation, 48 CFR 19.502–2(c), which permits small businesses in small business set-asides where the anticipated cost of the procurement will not exceed $25,000, to provide the product or products of any domestic firm.

As suggested by one commenter, the final rule makes one clarification to the provisions regarding HUBZone non-manufacturers. In both § 126.206 and § 126.601(d), the final rule specifically references 13 CFR 121.406(b)(1)(i) and (ii), as the applicable definition of non-manufacturer. Other than that clarification, this final rule adopts without change the proposed amendments pertaining to HUBZone non-manufacturers.

Application of the Final Rule

As indicated above, this rule is effective thirty days from the date of publication. To ensure that applicants to and participants in the HUBZone program are subject to the same regulatory requirements, this final rule applies to all HUBZone applications submitted on or after the effective date of this rule, to all pending HUBZone applications, and to all currently certified HUBZone SBCs.

Compliance With Executive Orders 12866, 12988, and 13132, the Paperwork Reduction Act (44 U.S.C. Ch. 35), and the Regulatory Flexibility Act (5 U.S.C. 601–602)

The Office of Management and Budget (OMB) reviewed this final rule as a ''significant'' regulatory action under Executive Order 12866.

For purposes of Executive Order 12988, SBA has drafted this rule, to the extent practicable, in accordance with the standards set forth in section 3 of that Order.

For purposes of Executive Order 13132, SBA has determined that this

final rule has no federalism implications warranting the preparation of a Federalism Assessment.

For purposes of the Paperwork Reduction Act, 44 U.S.C. Ch. 35, SBA has determined that this rule does not impose new reporting or recordkeeping requirements.

SBA has determined that this final rule may have a significant beneficial economic impact on a substantial number of small entities within the meaning of the Regulatory Flexibility Act (RFA), 5 U.S.C. § 601, *et seq.* This rule involves revising the definition of ''principal office'' and eliminating certain requirements governing the allowable affiliations of qualified HUBZone SBCs and SBCs that operate as non-manufacturers. The rule will affect a large percentage of the over 30,000 SBCs that SBA believes are now eligible or will become eligible for certification as qualified HUBZone SBCs over the life of the program.

Pursuant to the requirements of the RFA, SBA prepared an Initial Regulatory Flexibility Analysis (IRFA), fully discussing the economic impact of the amendments on small entities. SBA submitted a copy of the IRFA to the Chief Counsel for Advocacy of the Small Business Administration. No comments were submitted in response to the IRFA. Since this final rule implements the amendments without significant substantive change, this final rule does not change the nature of the economic impact of the amendments on small entities, nor alter the basis of SBA's IRFA. Accordingly, this Final Regulatory Flexibility Analysis incorporates by reference the entire IRFA. A copy of the Final Regulatory Flexibility Analysis and IRFA may be obtained by contacting the Chief Counsel for Advocacy of the Small Business Administration, (202) 205–6533.

The amendments that are the subject of this rule will affect primarily those SBCs that participate in Federal procurements, that have affiliates, or that are non-manufacturers. The amendments will make it easier for qualified SBCs to participate in the program because it provides a definition of ''principal office'' that accommodates the fluid nature of the construction and service industries and it allows qualified HUBZone SBCs to have any affiliates provided that they, together with their affiliates, do not exceed their applicable size standard under part 121 of title 13 of the Code of Federal Regulations. This final rule also will facilitate the certification of qualified HUBZone SBCs and open the door to more HUBZone contracts by eliminating the eligibility requirement that non-manufacturers must demonstrate that they can supply the goods of a qualified SBC as a prerequisite for program certification, and by exempting non-manufacturers from making that showing when submitting offers to supply goods for HUBZone contracts with a total value of $25,000 or less.

In addition, this final rule does not duplicate, overlap or conflict with relevant Federal regulations. SBA reviewed several alternatives to the amendments implemented by this rule and believes that the amendments are in the best interest of SBCs and the HUBZone Program.

(Catalog of Federal Domestic Assistance Programs, No. 59,009)

List of Subjects in 13 CFR Part 126

Administrative practice and procedure, Government procurement, Reporting and recordkeeping requirements, Small businesses.

Accordingly, for the reasons set forth above, SBA amends 13 CFR part 126, as follows:

PART 126—HUBZONE PROGRAM [AMENDED]

1. Revise the authority citation for 13 CFR part 126 to read as follows:

Authority: 15 U.S.C. 632(a); Pub. L. 105–135 sec. 601 *et seq.*, 111 Stat. 2592.

2. Amend § 126.101 by adding a new paragraph (c) to read as follows:

§ 126.101 Which government departments or agencies are affected directly by the HUBZone program?

* * * * *

(c) The HUBZone program does not apply to contracts awarded by state and local governments. However, state and local governments may use the List of qualified HUBZone SBCs to identify qualified HUBZone SBCs for similar programs authorized under state or local law.

3. Amend § 126.103 to revise the definition of ''principal office'' to read as follows:

§ 126.103 What definitions are important in the HUBZone program?

* * * * *

Principal office means the location where the greatest number of the concern's employees at any one location perform their work. However, for those concerns whose ''primary industry'' (see 13 CFR 121.107) is service or construction (see 13 CFR 121.201), the determination of principal office excludes the concern's employees who perform the majority of their work at job-site locations to fulfill specific contract obligations.

* * * * *

4. Revise § 126.204 to read as follows:

§ 126.204 May a qualified HUBZone SBC have affiliates?

A concern may have affiliates provided that the aggregate size of the concern and all its affiliates is small as defined in part 121 of this title.

5. Revise § 126.206 to read as follows:

§ 126.206 May non-manufacturers be certified as qualified HUBZone SBCs?

Non-manufacturers (referred to in the HUBZone Act of 1997 as ''regular dealers'') may be certified as qualified HUBZone SBCs if they meet all of the requirements set forth in § 126.200. For purposes of this part, a ''non-manufacturer'' is defined in § 121.406(b)(1)(i) and (ii) of this title.

6. Amend § 126.601 by revising paragraph (d) to read as follows:

§ 126.601 What additional requirements must a qualified HUBZone SBC meet to bid on a contract?

* * * * *

(d) A qualified HUBZone SBC which is a non-manufacturer may submit an offer on a HUBZone contract for supplies if it meets the requirements of the non-manufacturer rule set forth at § 121.406(b)(1)(i) and (ii) of this title, and if the small manufacturer providing the end item for the contract is also a qualified HUBZone SBC. However, for HUBZone contracts at or below $25,000 in total value, a qualified HUBZone SBC may supply the end item of any manufacturer, including a large business.

Dated: January 10, 2001.

Aida Alvarez,

Administrator.

[FR Doc. 01–1543 Filed 1–17–01; 8:45 am]

BILLING CODE 8025–01–P

DEPARTMENT OF TRANSPORTATION

Federal Aviation Administration

14 CFR Part 39

[Docket No. 2000–CE–57–AD; Amendment 39–12073; AD 2001–01–03]

RIN 2120–AA64

Airworthiness Directives; British Aerospace HP137 Mk1, Jetstream Series 200, and Jetstream Models 3101 and 3201 Airplanes

AGENCY: Federal Aviation Administration, DOT.

ACTION: Final rule.

SUMMARY: This amendment adopts a new airworthiness directive (AD) that applies to all British Aerospace HP137 Mk1, Jetstream series 200, and Jetstream Models 3101 and 3201 airplanes. This AD requires you to remove the nose landing gear steering actuator and install one that incorporates a modified piston rod. This AD is the result of mandatory continuing airworthiness information (MCAI) issued by the airworthiness authority for the United Kingdom. The actions specified by this AD are intended to prevent failure of the nose landing gear steering actuator because of problems with the current design piston rod. Continued operation with the current design piston rod could result in loss of nose wheel steering and possible loss of control of the airplane during takeoff, landing, and taxi operations.

DATES: This AD becomes effective on February 24, 2001.

The Director of the Federal Register approved the incorporation by reference of certain publications listed in the regulations as of February 24, 2001.

ADDRESSES: You may get the service information referenced in this AD from British Aerospace Regional Aircraft, Prestwick International Airport, Ayrshire, KA9 2RW, Scotland; telephone: (01292) 479888; facsimile: (01292) 479703. You may examine this information at the Federal Aviation Administration (FAA), Central Region, Office of the Regional Counsel, Attention: Rules Docket No. 2000–CE–57–AD, 901 Locust, Room 506, Kansas City, Missouri 64106; or at the Office of the Federal Register, 800 North Capitol Street, NW, suite 700, Washington, DC.

FOR FURTHER INFORMATION CONTACT: Mr. Doug Rudolph, Aerospace Engineer, FAA, Small Airplane Directorate, 901 Locust, Room 301, Kansas City, Missouri 64106; telephone: (816) 329–4059; facsimile: (816) 329–4090.

SUPPLEMENTARY INFORMATION:

Discussion

What events have caused this AD? The Civil Aviation Authority (CAA), which is the airworthiness authority for the United Kingdom, recently notified FAA that an unsafe condition may exist on all British Aerospace HP137 Mk1, Jetstream series 200, and Jetstream Models 3101 and 3201 airplanes. The CAA reports three occurrences of nose landing gear failure in the area of the undercut on the base of the eye and thread on the steering actuator. The CAA reports cracks in this area on 10 additional nose landing gear units.

Investigation of these occurrences reveals incorrect installation or insufficient lubrication at the steering actuator trunnions. This then causes bending loads in the steering actuator piston rod during operation.

What are the consequences if the condition is not corrected? Cracks in or failure of the steering actuator piston rod could result in loss of nose wheel steering and possible loss of control of the airplane during takeoff, landing, and taxi operations.

Has FAA taken any action to this point? We issued a proposal to amend part 39 of the Federal Aviation Regulations (14 CFR part 39) to include an AD that would apply to all British Aerospace HP137 Mk1, Jetstream series 200, and Jetstream Models 3101 and 3201 airplanes. This proposal was published in the **Federal Register** as a notice of proposed rulemaking (NPRM) on October 24, 2000 (65 FR 63551). The NPRM proposed to require you to remove the nose landing gear steering actuator and install one that incorporates a modified piston rod.

Was the public invited to comment? Interested persons were afforded an opportunity to participate in the making of this amendment. We have given due consideration to the comments received.

Comment Disposition

What is the Commenters' Concern? Several commenters express concern over the compliance time that FAA established. In particular, the comments are:

—200 hours time-in-service (TIS) is unrealistic for the installation because parts would not be available and many of the affected aircraft would be unjustly grounded; and

—since CAA and British Aerospace recommend 3,000 landings since May 5, 2000, FAA should adopt a similar compliance time.

What is FAA's Response to the Concern? After consulting with British Aerospace and CAA, we concur that 200 hours TIS would unjustly ground many of the affected aircraft. We are changing the compliance time of the installation in this final rule as follows:

''Within the next 3,000 landings after May 5, 2000 (the issue date of the applicable service information) or within the next 90 days after the effective date of this AD, whichever occurs later.''

The FAA's Determination

What is FAA's Final Determination on this Issue? After careful review of all available information related to the subject presented above, we have determined that air safety and the public interest require the adoption of the rule as proposed except for the compliance time change and minor editorial corrections. We determined that this compliance time change and the minor corrections:

—Will not change the meaning of the AD; and

—Will not add any additional burden upon the public than was already proposed.

Cost Impact

How many airplanes does this AD impact? We estimate that this AD affects 264 airplanes in the U.S. registry.

What is the cost impact of this AD on owners/operators of the affected airplanes? We estimate the following costs to accomplish the modification:

Labor cost	Parts cost	Total cost per airplane	Total cost on U.S. airplane operators
2 workhours × $60 per hour=$120	$1,520 per airplane	$1,640 per airplane	$432,960

Regulatory Impact

Does this AD impact various entities? The regulations adopted herein will not have a substantial direct effect on the States, on the relationship between the national government and the States, or on the distribution of power and responsibilities among the various levels of government. Therefore, it is determined that this final rule does not have federalism implications under Executive Order 13132.

Does this AD involve a significant rule or regulatory action? For the reasons discussed above, I certify that this action (1) is not a ''significant regulatory action'' under Executive Order 12866; (2) is not a ''significant rule'' under DOT Regulatory Policies and Procedures (44 FR 11034, February 26, 1979); and (3) will not have a significant economic impact, positive or negative, on a substantial number of small entities

under the criteria of the Regulatory Flexibility Act. A copy of the final evaluation prepared for this action is contained in the Rules Docket. A copy of it may be obtained by contacting the Rules Docket at the location provided under the caption **ADDRESSES**.

List of Subjects in 14 CFR Part 39

Air transportation, Aircraft, Aviation safety, Incorporation by Reference, Safety.

Adoption of the Amendment

Accordingly, under the authority delegated to me by the Administrator, the Federal Aviation Administration amends part 39 of the Federal Aviation Regulations (14 CFR part 39) as follows:

PART 39—AIRWORTHINESS DIRECTIVES

1. The authority citation for part 39 continues to read as follows:

Authority: 49 U.S.C. 106(g), 40113, 44701.

§ 39.13 [Amended]

2. FAA amends § 39.13 by adding a new AD to read as follows:

2001–01–03 British Aerospace: Amendment 39–12073; Docket No. 2000–CE–57–AD.

(a) *What airplanes are affected by this AD?* This AD affects Models HP137 Mk1, Jetstream Series 200, and Jetstream Models 3101 and 3201 airplanes, all serial numbers, certificated in any category.

(b) *Who must comply with this AD?* Anyone who wishes to operate any of the above airplanes must comply with this AD.

(c) *What problem does this AD address?* The actions specified by this AD are intended to prevent failure of the nose landing gear steering actuator because of problems with the current design piston rod. Continued operation with the current design piston rod could result in loss of nose wheel steering and possible loss of control of the airplane during takeoff, landing, and taxi operations.

(d) *What actions must I accomplish to address this problem?* To address this problem, you must accomplish the following:

Action	Compliance time	Procedures
(1) Remove the nose landing gear steering actuator and install one that incorporates a modified piston rod.	Within the next 3,000 landings after May 5, 2000 (the issue date of the applicable service bulletin) or within the next 90 days after February 17, 2001 (the effective date of this AD), whichever occurs later, unless already accomplished. If the number of landings is unknown, you may use hours time-in-service (TIS) by multiplying the number of hours TIS by 0.75. In this carfe, 3,000 landings would be equal to 4,000 hours TIS (4,000 hours TIS ×.75=3,000 landings).	In accordance with the procedures in APPH Ltd. Service Bulletin 32–73, dated April 2000, as referenced in British Aerospace Jetstream Manadatory Service Bulletin 32–JA000342, Issued: May 5, 2000.
(2) You may not install, on any affected airplane, a nose landing gear unit that does not incorporate a modified steering actuator piston rod, as required by paragraph (d)(1) of this AD.	As of February 17, 2001 (the effective date of this AD).	Not Applicable.

(e) *Can I comply with this AD in any other way?* You may use an alternative method of compliance or adjust the compliance time if:

(1) Your alternative method of compliance provides an equivalent level of safety; and

(2) The Manager, Small Airplane Directorate, approves your alternative. Submit your request through an FAA Principal Maintenance Inspector, who may add comments and then send it to the Manager, Small Airplane Directorate.

Note 1: This AD applies to each airplane identified in paragraph (a) of this AD, regardless of whether it has been modified, altered, or repaired in the area subject to the requirements of this AD. For airplanes that have been modified, altered, or repaired so that the performance of the requirements of this AD is affected, the owner/operator must request approval for an alternative method of compliance in accordance with paragraph (e) of this AD. The request should include an assessment of the effect of the modification, alteration, or repair on the unsafe condition addressed by this AD; and, if you have not eliminated the unsafe condition, specific actions you propose to address it.

(f) *Where can I get information about any already-approved alternative methods of compliance?* Contact Mr. Doug Rudolph, Aerospace Engineer, FAA, Small Airplane Directorate, 901 Locust, Room 301, Kansas City, Missouri 64106; telephone: (816) 329–4059; facsimile: (816) 329–4090.

(g) *What if I need to fly the airplane to another location to comply with this AD?* The FAA can issue a special flight permit under sections 21.197 and 21.199 of the Federal Aviation Regulations (14 CFR 21.197 and 21.199) to operate your airplane to a location where you can accomplish the requirements of this AD.

(h) *Are any service bulletins incorporated into this AD by reference?* Actions required by this AD must be done in accordance with APPH Ltd. Service Bulletin 32–73, dated April 2000, as referenced in British Aerospace Jetstream Mandatory Service Bulletin 32–JA000342, Issued: May 5, 2000. The Director of the Federal Register approved this incorporation by reference under 5 U.S.C. 552(a) and 1 CFR part 51. You can get copies from British Aerospace Regional Aircraft, Prestwick International Airport, Ayrshire, KA9 2RW, Scotland. You can look at copies at FAA, Central Region, Office of the Regional Counsel, 901 Locust, Room 506, Kansas City, Missouri, or at the Office of the Federal Register, 800 North Capitol Street, NW, suite 700, Washington, DC.

(i) *When does this amendment become effective?* This amendment becomes effective on February 24, 2001.

Note 2: The subject of this AD is addressed in British AD 004–05–2000.

Issued in Kansas City, Missouri, on January 4, 2001.

Michael Gallagher,

Manager, Small Airplane Directorate, Aircraft Certification Service.

[FR Doc. 01–901 Filed 1–17–01; 8:45 am]

BILLING CODE 4910–13–P

DEPARTMENT OF TRANSPORTATION

Federal Aviation Administration

14 CFR Part 39

[Docket No. 2000–NM–141–AD; Amendment 39–12078; AD 2001–01–08]

RIN 2120–AA64

Airworthiness Directives; BAE Systems (Operations) Limited (Jetstream) Model 4101 Airplanes

AGENCY: Federal Aviation Administration, DOT.

ACTION: Final rule.

SUMMARY: This amendment adopts a new airworthiness directive (AD), applicable to all BAE Systems (Operations) Limited (Jetstream) Model 4101 airplanes, that requires inspection

for cracking of the mounting brackets of the hydraulic hand pump at the frame attachment flanges, replacement of any cracked bracket with a new bracket, replacement of all bolts and nuts with new bolts and nuts, and installation of a particular ''D'' packer. The actions specified by this AD are intended to prevent failure of these brackets, which could result in inability to extend the landing gear in an emergency situation where the main hydraulic system is lost. This action is intended to address the identified unsafe condition.

DATES: Effective February 22, 2001.

The incorporation by reference of certain publications listed in the regulations is approved by the Director of the Federal Register as of February 22, 2001.

ADDRESSES: The service information referenced in this AD may be obtained from British Aerospace Regional Aircraft American Support, 13850 Mclearen Road, Herndon, Virginia 20171. This information may be examined at the Federal Aviation Administration (FAA), Transport Airplane Directorate, Rules Docket, 1601 Lind Avenue, SW., Renton, Washington; or at the Office of the Federal Register, 800 North Capitol Street, NW., suite 700, Washington, DC.

FOR FURTHER INFORMATION CONTACT: Norman B. Martenson, Manager, International Branch, ANM–116, FAA, Transport Airplane Directorate, 1601 Lind Avenue, SW., Renton, Washington 98055–4056; telephone (425) 227–2110; fax (425) 227–1149.

SUPPLEMENTARY INFORMATION: A proposal to amend part 39 of the Federal Aviation Regulations (14 CFR part 39) to include an airworthiness directive (AD) that is applicable to all British Aerospace (Jetstream) Model 4101 airplanes was published in the **Federal Register** on October 30, 2000 (65 FR 64629). That action proposed to require inspection for cracking of the mounting brackets of the hydraulic hand pump at the frame attachment flanges, replacement of any cracked bracket with a new bracket, replacement of all bolts and nuts with new bolts and nuts, and installation of a particular ''D'' packer.

Manufacturer Name Change

The manufacturer name in the final rule has been changed from British Aerospace to BAE Systems (Operations) Limited to reflect the recent company name change.

Comments

Interested persons have been afforded an opportunity to participate in the making of this amendment. No comments were submitted in response to the proposal or the FAA's determination of the cost to the public.

Conclusion

After careful review of the available data, the FAA has determined that air safety and the public interest require the adoption of the rule with the change described previously. The FAA has determined that this change will neither increase the economic burden on any operator nor increase the scope of the AD.

Cost Impact

The FAA estimates that 59 airplanes of U.S. registry will be affected by this AD, that it will take approximately 4 work hours per airplane to accomplish the required actions, and that the average labor rate is $60 per work hour. Based on these figures, the cost impact of the AD on U.S. operators is estimated to be $14,160, or $240 per airplane.

The cost impact figure discussed above is based on assumptions that no operator has yet accomplished any of the requirements of this AD action, and that no operator would accomplish those actions in the future if this AD were not adopted. The cost impact figures discussed in AD rulemaking actions represent only the time necessary to perform the specific actions actually required by the AD. These figures typically do not include incidental costs, such as the time required to gain access and close up, planning time, or time necessitated by other administrative actions.

Regulatory Impact

The regulations adopted herein will not have a substantial direct effect on the States, on the relationship between the national Government and the States, or on the distribution of power and responsibilities among the various levels of government. Therefore, it is determined that this final rule does not have federalism implications under Executive Order 13132.

For the reasons discussed above, I certify that this action (1) is not a ''significant regulatory action'' under Executive Order 12866; (2) is not a ''significant rule'' under DOT Regulatory Policies and Procedures (44 FR 11034, February 26, 1979); and (3) will not have a significant economic impact, positive or negative, on a substantial number of small entities under the criteria of the Regulatory Flexibility Act. A final evaluation has been prepared for this action and it is contained in the Rules Docket. A copy of it may be obtained from the Rules Docket at the location provided under the caption **ADDRESSES.**

List of Subjects in 14 CFR Part 39

Air transportation, Aircraft, Aviation safety, Incorporation by reference, Safety.

Adoption of the Amendment

Accordingly, pursuant to the authority delegated to me by the Administrator, the Federal Aviation Administration amends part 39 of the Federal Aviation Regulations (14 CFR part 39) as follows:

PART 39—AIRWORTHINESS DIRECTIVES

1. The authority citation for part 39 continues to read as follows:

Authority: 49 U.S.C. 106(g), 40113, 44701.

§ 39.13 [Amended]

2. Section 39.13 is amended by adding the following new airworthiness directive:

2001–01–08 BAE Systems (Operations) Limited [Formerly British Aerospace Regional Aircraft]: Amendment 39–12078. Docket 2000–NM–141–AD.

Applicability: All Model Jetstream 4101 airplanes, certificated in any category.

Note 1: This AD applies to each airplane identified in the preceding applicability provision, regardless of whether it has been modified, altered, or repaired in the area subject to the requirements of this AD. For airplanes that have been modified, altered, or repaired so that the performance of the requirements of this AD is affected, the owner/operator must request approval for an alternative method of compliance in accordance with paragraph (b) of this AD. The request should include an assessment of the effect of the modification, alteration, or repair on the unsafe condition addressed by this AD; and, if the unsafe condition has not been eliminated, the request should include specific proposed actions to address it.

Compliance: Required as indicated, unless accomplished previously.

To prevent failure of the mounting brackets of the hydraulic hand pump at the frame attachment flanges, which could result in inability to extend the landing gear in an emergency situation where the main hydraulic system is lost, accomplish the following:

Inspection and Installation

(a) Within 6 months after the effective date of this AD, perform a one-time dye penetrant inspection to detect cracking of the mounting brackets of the hydraulic hand pump at the frame attachment flanges, install ''D'' packers to the mounting brackets, and replace all bolts and nuts with new bolts and nuts, in accordance with the Accomplishment Instructions of Jetstream Service Bulletin J41–53–046, dated March 15, 2000. If any cracked bracket is found during the

inspection, prior to further flight, replace it with a new bracket.

Alternative Methods of Compliance

(b) An alternative method of compliance or adjustment of the compliance time that provides an acceptable level of safety may be used if approved by the Manager, International Branch, ANM–116, FAA, Transport Airplane Directorate. Operators shall submit their requests through an appropriate FAA Principal Maintenance Inspector, who may add comments and then send it to the Manager, International Branch, ANM–116.

Note 2: Information concerning the existence of approved alternative methods of compliance with this AD, if any, may be obtained from the International Branch, ANM–116.

Special Flight Permits

(c) Special flight permits may be issued in accordance with §§ 21.197 and 21.199 of the Federal Aviation Regulations (14 CFR 21.197 and 21.199) to operate the airplane to a location where the requirements of this AD can be accomplished.

Incorporation by Reference

(d) The actions shall be done in accordance with Jetstream Service Bulletin J41–53–046, dated March 15, 2000. This incorporation by reference was approved by the Director of the Federal Register in accordance with 5 U.S.C. 552(a) and 1 CFR part 51. Copies may be obtained from British Aerospace Regional Aircraft American Support, 13850 Mclearen Road, Herndon, Virginia 20171. Copies may be inspected at the FAA, Transport Airplane Directorate, 1601 Lind Avenue, SW., Renton, Washington; or at the Office of the Federal Register, 800 North Capitol Street, NW., suite 700, Washington, DC.

Note 3: The subject of this AD is addressed in British airworthiness directive 003–03–2000.

Effective Date

(e) This amendment becomes effective on February 22, 2001.

Issued in Renton, Washington, on January 8, 2001.

Donald L. Riggin,

Acting Manager, Transport Airplane Directorate, Aircraft Certification Service.

[FR Doc. 01–1077 Filed 1–17–01; 8:45 am]

BILLING CODE 4910–13–U

DEPARTMENT OF TRANSPORTATION

Federal Aviation Administration

14 CFR Part 39

[Docket No. 99–NM–202–AD; Amendment 39–12076; AD 2001–01–06]

RIN 2120–AA64

Airworthiness Directives; Airbus Model A300 B2 and A300 B4 (A300); Model A300 B4–600, A300 B4–600R, and A300 F4–600R (A300–600); and Model A310 Series Airplanes; Equipped With Dowty Ram Air Turbines

AGENCY: Federal Aviation Administration, DOT.

ACTION: Final rule.

SUMMARY: This amendment supersedes an existing airworthiness directive (AD), applicable to certain Airbus Industrie Model A300, A300–600, and A310 series airplanes; equipped with Dowty ram air turbines (RAT). That AD currently requires repetitive deployment tests of the RAT and checks of the adjustment of the locking rod. This amendment also requires modification of the RAT, which terminates the repetitive tests and checks. This amendment is prompted by issuance of mandatory continuing airworthiness information by a foreign civil airworthiness authority. The actions specified by this AD are intended to ensure the availability of the RAT in case of need.

DATES: Effective February 22, 2001.

The incorporation by reference of certain publications, as listed in the regulations, is approved by the Director of the Federal Register as of February 22, 2001.

The incorporation by reference of Airbus All Operator Telex 29–09, dated November 16, 1993, as listed in the regulations, was approved previously by the Director of the Federal Register as of March 2, 1994 (59 FR 7208, February 15, 1994).

ADDRESSES: The service information referenced in this AD may be obtained from Airbus Industrie, 1 Rond Point Maurice Bellonte, 31707 Blagnac Cedex, France. This information may be examined at the Federal Aviation Administration (FAA), Transport Airplane Directorate, Rules Docket, 1601 Lind Avenue, SW., Renton, Washington; or at the Office of the Federal Register, 800 North Capitol Street, NW., suite 700, Washington, DC.

FOR FURTHER INFORMATION CONTACT: Norman B. Martenson, Manager, International Branch, ANM–116, FAA, Transport Airplane Directorate, 1601 Lind Avenue, SW., Renton, Washington 98055–4056; telephone (425) 227–2110; fax (425) 227–1149.

SUPPLEMENTARY INFORMATION: A proposal to amend part 39 of the Federal Aviation Regulations (14 CFR part 39) by superseding AD 94–04–05, amendment 39–8823 (59 FR 7208, February 15, 1994), which is applicable to certain Airbus Industrie Model A300, A300–600, and A310 series airplanes, was published as a supplemental notice of proposed rulemaking (NPRM) in the **Federal Register** on August 23, 2000 (65 FR 51254). The action proposed to continue to require repetitive deployment tests of the ram air turbine (RAT) and checks of the adjustment of the locking rod. The action also proposed to require modification of the RAT, which would terminate the repetitive tests and checks, and to expand the applicability of the existing AD.

Airplane Model Designation Change

Since the issuance of the supplemental NPRM, the FAA has determined that it is necessary to revise the manner in which it specifies the model designation for Airbus Model A300 and A300–600 series airplanes to reflect the designations that appear on the type certificate data sheet (TCDS). This final rule has been revised accordingly.

Comments

Interested persons have been afforded an opportunity to participate in the making of this amendment. No comments were submitted in response to the supplemental NPRM or the FAA's determination of the cost to the public.

Conclusion

After careful review of the available data, the FAA has determined that air safety and the public interest require the adoption of the rule with the change previously described. The FAA has determined that this change will neither increase the economic burden on any operator nor increase the scope of the AD.

Cost Impact

There are approximately 126 airplanes of U.S. registry that will be affected by this AD.

The repetitive tests and checks that are required by AD 94–04–05, and retained in this AD, take approximately 2 work hours per airplane to accomplish, at an average labor rate of $60 per work hour. Based on these figures, the cost impact of this requirement on U.S. operators is

estimated to be $15,120, or $120 per airplane, per test/check cycle.

The new modification that is required by this AD action will take approximately 6 work hours per airplane to accomplish, at an average labor rate of $60 per work hour. Required parts will cost approximately $3,995 per airplane. Based on these figures, the cost impact of the new requirements of this AD on U.S. operators is estimated to be $548,730, or $4,355 per airplane.

The cost impact figures discussed above are based on assumptions that no operator has yet accomplished any of the requirements of this AD action, and that no operator would accomplish those actions in the future if this AD were not adopted. The cost impact figures discussed in AD rulemaking actions represent only the time necessary to perform the specific actions actually required by the AD. These figures typically do not include incidental costs, such as the time required to gain access and close up, planning time, or time necessitated by other administrative actions.

Regulatory Impact

The regulations adopted herein will not have a substantial direct effect on the States, on the relationship between the national Government and the States, or on the distribution of power and responsibilities among the various levels of government. Therefore, it is determined that this final rule does not have federalism implications under Executive Order 13132.

For the reasons discussed above, I certify that this action (1) is not a ''significant regulatory action'' under Executive Order 12866; (2) is not a ''significant rule'' under DOT Regulatory Policies and Procedures (44 FR 11034, February 26, 1979); and (3) will not have a significant economic impact, positive or negative, on a substantial number of small entities under the criteria of the Regulatory Flexibility Act. A final evaluation has been prepared for this action and it is contained in the Rules Docket. A copy of it may be obtained from the Rules Docket at the location provided under the caption **ADDRESSES.**

List of Subjects in 14 CFR Part 39

Air transportation, Aircraft, Aviation safety, Incorporation by reference, Safety.

Adoption of the Amendment

Accordingly, pursuant to the authority delegated to me by the Administrator, the Federal Aviation Administration amends part 39 of the Federal Aviation Regulations (14 CFR part 39) as follows:

PART 39—AIRWORTHINESS DIRECTIVES

1. The authority citation for part 39 continues to read as follows:

Authority: 49 U.S.C. 106(g), 40113, 44701.

§ 39.13 [Amended]

2. Section 39.13 is amended by removing amendment 39–8823 (59 FR 7208, February 15, 1994), and by adding a new airworthiness directive (AD), amendment 39–12076, to read as follows:

2001–01–06 Airbus Industrie: Amendment 39–12076. Docket 99–NM–202–AD. Supersedes AD 94–04–05, Amendment 39–8823.

Applicability: Model A300 B2 and A300 B4 (A300); Model A300 B4–600, A300 B4–600R, and A300 F4–600R (A300–600); and Model A310 series airplanes; certificated in any category; equipped with Dowty ram air turbines (RAT) having the following part numbers:

RAT 16C 100 VG
RAT 16C 101 VG
RAT 16C 102 VG
RAT 16C 103 VG
RAT 16C 105 VG
RAT 16C 109 VG
RAT 16C 110 VG
768336
768338

Note 1: This AD applies to each airplane identified in the preceding applicability provision, regardless of whether it has been modified, altered, or repaired in the area subject to the requirements of this AD. For airplanes that have been modified, altered, or repaired so that the performance of the requirements of this AD is affected, the owner/operator must request approval for an alternative method of compliance in accordance with paragraph (e)(1) of this AD. The request should include an assessment of the effect of the modification, alteration, or repair on the unsafe condition addressed by this AD; and, if the unsafe condition has not been eliminated, the request should include specific proposed actions to address it.

Compliance: Required as indicated, unless accomplished previously.

To ensure the availability of the RAT in case of need, accomplish the following:

Restatement of Requirements of AD 94–04–05:

Repetitive Tests and Checks

(a) Within 60 days after March 2, 1994 (the effective date of AD 94–04–05, amendment 39–8823), or 500 hours time-in-service after March 2, 1994, whichever occurs first, perform a deployment test of the RAT and check the adjustment of the locking rod, in accordance with Airbus All Operator Telex (AOT) 29–09, dated November 16, 1993. Repeat the deployment test and adjustment check thereafter at intervals not to exceed 10 months.

(1) If no discrepancy is found, prior to further flight, apply grease to the RAT leg at the entry and exit positions of the locking rod spring housing, in accordance with the AOT.

(2) If any discrepancy is found, prior to further flight, correct it and apply grease to the RAT leg at the entry and exit positions of the locking rod spring housing, in accordance with the AOT.

New Requirements of This AD:

New Service Bulletin Revisions

(b) As of the effective date of this new AD, Airbus Service Bulletin A300–29–0101 (for Model A300 series airplanes), A310–29–2039 (for Model A310 series airplanes), or A300–29–6030 (for Model A300–600 series airplanes); all Revision 02, all dated June 28, 2000; as applicable; must be used for accomplishment of the actions required by paragraph (a) of this AD.

Modification

(c) Within 24 months after the effective date of this AD, modify the RAT by installing a grease nipple and a scraper seal assembly, replacing the locking rod spring with a stronger spring, and re-identifying the RAT with a new part number; in accordance with Airbus Service Bulletin A300–29–0106 (for Model A300 series airplanes), A310–29–2078 (for Model A310 series airplanes), or A300–29–6039 (for Model A300–600 series airplanes); all Revision 03, all dated June 28, 2000; as applicable. Accomplishment of the modification constitutes terminating action for the repetitive tests and checks required by paragraph (a) of this AD.

Note 2: The service bulletins refer to Sundstrand Service Bulletin ERPS26T–29–1 for modification instructions and new part numbers.

Note 3: Accomplishment of the actions specified in Airbus Service Bulletin A300–29–0106, A310–29–2078, or A300–29–6039; Revision 01; all dated September 8, 1997; or Revision 02, all dated January 26, 1999; as applicable; prior to the effective date of this AD, is acceptable for compliance with paragraph (c) of this AD.

Spares

(d) As of the effective date of this AD, no person shall install a RAT having the following part numbers on any airplane:

RAT 16C 100 VG
RAT 16C 101 VG
RAT 16C 102 VG
RAT 16C 103 VG
RAT 16C 105 VG
RAT 16C 109 VG
RAT 16C 110 VG
768336
768338

Alternative Methods of Compliance

(e)(1) An alternative method of compliance or adjustment of the compliance time that provides an acceptable level of safety may be used if approved by the Manager, International Branch, ANM–116, FAA, Transport Airplane Directorate. Operators shall submit their requests through an appropriate FAA Principal Maintenance Inspector, who may add comments and then

send it to the Manager, International Branch, ANM–116.

(2) Alternative methods of compliance, approved previously in accordance with AD 94–04–05, amendment 39–8823, are approved as alternative methods of compliance with paragraph (a) of this AD.

Note 4: Information concerning the existence of approved alternative methods of compliance with this AD, if any, may be obtained from the International Branch, ANM–116.

(f) Special flight permits may be issued in accordance with §§ 21.197 and 21.199 of the Federal Aviation Regulations (14 CFR 21.197 and 21.199) to operate the airplane to a location where the requirements of this AD can be accomplished.

Incorporation by Reference

(g) The actions shall be done in accordance with Airbus All Operator Telex 29–09, dated November 16, 1993; Airbus Service Bulletin A300–29–0101, Revision 02, dated June 28, 2000; Airbus Service Bulletin A310–29–2039, Revision 02, dated June 28, 2000; Airbus Service Bulletin A300–29–6030, Revision 02, dated June 28, 2000; Airbus Service Bulletin A300–29–0106, Revision 03, dated June 28, 2000; Airbus Service Bulletin A310–29–2078, Revision 03, dated June 28, 2000; and Airbus Service Bulletin A300–29–6039, Revision 03, dated June 28, 2000; as applicable.

(1) The incorporation by reference of Airbus Service Bulletin A300–29–0101, Revision 02, dated June 28, 2000; Airbus Service Bulletin A310–29–2039, Revision 02, dated June 28, 2000; Airbus Service Bulletin A300–29–6030, Revision 02, dated June 28, 2000; Airbus Service Bulletin A300–29–0106, Revision 03, dated June 28, 2000; Airbus Service Bulletin A310–29–2078, Revision 03, dated June 28, 2000; and Airbus Service Bulletin A300–29–6039, Revision 03, dated June 28, 2000; is approved by the Director of the Federal Register in accordance with 5 U.S.C. 552(a) and 1 CFR part 51.

(2) The incorporation by reference of Airbus All Operator Telex 29–09, dated November 16, 1993, was approved previously by the Director of the Federal Register as of March 2, 1994 (59 FR 7208, February 15, 1994).

(3) Copies may be obtained from Airbus Industrie, 1 Rond Point Maurice Bellonte, 31707 Blagnac Cedex, France. Copies may be inspected at the FAA, Transport Airplane Directorate, 1601 Lind Avenue, SW., Renton, Washington; or at the Office of the Federal Register, 800 North Capitol Street, NW., suite 700, Washington, DC.

Note 5: The subject of this AD is addressed in French airworthiness directive 2000–259–315(B), dated June 28, 2000.

Effective Date

(h) This amendment becomes effective on February 22, 2001.

Issued in Renton, Washington, on January 8, 2001.

Donald L. Riggin,

Acting Manager, Transport Airplane Directorate, Aircraft Certification Service.

[FR Doc. 01–1076 Filed 1–17–01; 8:45 am]

BILLING CODE 4910–13–U

DEPARTMENT OF TRANSPORTATION

Federal Aviation Administration

14 CFR Part 39

[Docket No. 98–NM–325–AD; Amendment 39–12075; AD 2001–01–05]

RIN 2120–AA64

Airworthiness Directives; Dassault Model Falcon 10 and Model Mystere-Falcon 50 Series Airplanes

AGENCY: Federal Aviation Administration, DOT.

ACTION: Final rule.

SUMMARY: This amendment adopts a new airworthiness directive (AD), applicable to certain Dassault Model Falcon 10 and Model Mystere-Falcon 50 series airplanes. For certain airplanes, this amendment requires modification of the aircraft wiring to illuminate the ''T/O CONFIG'' red warning light on the cockpit warning panel. For certain other airplanes, this amendment requires installation of a ''NO TAKEOFF'' red light on each pilot's instrument panel; modification of the associated aircraft wiring to activate the lights whenever the aircraft is not in the proper configuration for takeoff; and a revision to the Airplane Flight Manual to check that the ''NO TAKEOFF'' lights are out prior to takeoff. This amendment is prompted by issuance of mandatory continuing airworthiness information by a foreign civil airworthiness authority. The actions specified by this AD are intended to prevent takeoff with the parking brake engaged, which could result in an extended takeoff roll or a rejected takeoff, and consequent runway overrun.

DATES: Effective February 22, 2001.

The incorporation by reference of certain publications listed in the regulations is approved by the Director of the Federal Register as of February 22, 2001.

ADDRESSES: The service information referenced in this AD may be obtained from Dassault Falcon Jet, P.O. Box 2000, South Hackensack, New Jersey 07606. This information may be examined at the Federal Aviation Administration (FAA), Transport Airplane Directorate, Rules Docket, 1601 Lind Avenue, SW., Renton, Washington; or at the Office of the Federal Register, 800 North Capitol Street, NW., suite 700, Washington, DC.

FOR FURTHER INFORMATION CONTACT: Norman B. Martenson, Manager, International Branch, ANM–116, FAA, Transport Airplane Directorate, 1601 Lind Avenue, SW., Renton, Washington 98055–4056; telephone (425) 227–2110; fax (425) 227–1149.

SUPPLEMENTARY INFORMATION: A proposal to amend part 39 of the Federal Aviation Regulations (14 CFR part 39) to include an airworthiness directive (AD) that is applicable to certain Dassault Model Falcon 10 and Model Mystere-Falcon 50 series airplanes was published in the **Federal Register** on July 22, 1999 (64 FR 39448). For certain airplanes, that action proposed to require modification of the aircraft wiring to illuminate the ''T/O CONFIG'' red warning light on the cockpit warning panel. For certain other airplanes, that action proposed to require installation of a ''NO TAKEOFF'' red light on each pilot's instrument panel; modification of the associated aircraft wiring to activate the lights whenever the aircraft is not in the proper configuration for takeoff; and a revision to the Airplane Flight Manual (AFM) to check that the ''NO TAKEOFF'' lights are out prior to takeoff.

Comments

Interested persons have been afforded an opportunity to participate in the making of this amendment. Due consideration has been given to the comments received.

Request for Credit for Previously Accomplished Work

One commenter, the manufacturer, requests that a statement be added to the proposed AD that would credit operators for the prior accomplishment of the original versions of the service bulletins. (The proposed AD specified that the modification be accomplished in accordance with Revision 1 of the corresponding service bulletins.)

The FAA concurs. Notes 2 and 4 have been added to the final rule to credit operators for the prior accomplishment of the modification in accordance with the original versions of the applicable service bulletins.

Request to Revise Cost Estimate

One commenter, the manufacturer, requests that the cost impact section of the proposed AD be revised to reflect certain information in its records: There are 144 U.S.-registered Model Falcon 10 series airplanes, of which 110 have already been modified; and 159 U.S.-registered Model Mystere-Falcon 50 series airplanes, of which 90 have already been modified. In addition, the commenter reports that the parts cost for Model Mystere-Falcon 50 series airplanes is $226.

The FAA acknowledges the revised information, and has revised the cost

impact section of the final rule accordingly.

Request to Revise Applicability: AD Unnecessary for Falcon 50

One commenter, a pilot of Model Falcon 50 series airplanes, considers this AD to be unreasonable for those airplanes. The commenter cites a lack of incidents or accidents involving Model Falcon 50 series airplanes resulting from the parking brake being applied during takeoff. The commenter further suggests that the likelihood of such an event to occur is remote, based on the following considerations:

- The parking brake handle on the Model Falcon 50 series airplane is in the normal line of sight for the pilot.
- There are other cockpit indications available to advise the pilot if the parking brake is applied during takeoff.
- Except for one abnormal procedure, the available operational procedures (provided by the AFM, operating manual, and formal instruction) direct the use of the parking brake only full forward or full aft (full on) when the engine is operating.

The FAA infers that the commenter requests that Model Falcon 50 series airplanes be removed from the applicability of the proposed AD.

The FAA does not concur. The FAA disagrees with the commenter's claim that no incidents have occurred as a result of the identified unsafe condition. In fact, several incidents have been reported, despite the considerations identified by the commenter. In 1997 in Bursa, Turkey, the flightcrew of a Model Mystere-Falcon 50 series airplane rejected a takeoff, resulting in damage to the aircraft. The reported aircraft behavior was analyzed in a flight simulator, which indicated that the takeoff was attempted with the parking brake engaged at the first detent. In addition, the FAA has received reports of three similar occurrences on Model Falcon 10 series airplanes, resulting in four casualties and two injuries. In all three incidents, the crew attempted takeoff with the parking brake engaged at the first detent. Therefore, because of these incidents related to the unsafe condition, the FAA finds it necessary to require the actions for the identified airplanes as proposed. No change to the final rule is warranted in this regard.

Request to Revise Applicability: Potential To Cause Unsafe Operation

This same commenter suggests that the incorporation of Dassault Service Bulletin F50–240, as proposed by the notice of proposed rulemaking (NPRM), could cause unsafe operation of Model Mystere-Falcon 50 series airplanes. The commenter states:

> If the anti-skid system of the #1 brake system is malfunctioning or inoperative, then the use of the #2 brakes according to the MMEL [Master Minimum Equipment List] and Annex 4 of the AFM [Airplane Flight Manual] is permitted. Inadvertent minor touching of the brakes during take-off under such conditions with Service Bulletin F50–240 applied would cause the illumination of the 'T/O CONFIG' red warning light; if this were to occur near or above V1, it would cause an aborted takeoff. This is because all other meanings to the crew of the 'T/O CONFIG' red warning light are dangerous to flight.

The FAA infers that the commenter is again requesting that Model Mystere-Falcon 50 series airplanes be removed from the applicability of the proposed AD.

The FAA does not concur. Data from the manufacturer indicate the reliability of the anti-skid system to be very high. Thus, the risk of concurrent failure of the anti-skid system and operation of the #2 brakes, in accordance with Annex 4 of the AFM, is remote. In light of the incidents previously described, the FAA considers the required change to the airplane design a necessary improvement in airplane safety and not a design change that would result in unsafe operations. No change to the final rule is necessary in this regard.

Request for Alternative Solutions

This same commenter suggests that the FAA consider alternative solutions to indicate that the parking brake is applied to the intermediate position during takeoff. The commenter states that the proposed actions would conflict with procedures in Annex 4 (if permitted) of the AFM. The commenter suggests incorporating either a switch on the parking brake handle or a pressure switch in the parking brake system before it joins the #2 brake system. The commenter alternatively suggests prohibiting use of Annex 4.

The FAA acknowledges the commenter's suggestions but has determined that the actions as proposed will adequately address the unsafe condition. No change to the final rule is necessary.

Request To Revise MMEL

The manufacturer suggests incorporating the following sentence into the Maintenance and Operating procedures for the MMEL: ''When dispatching with anti-skid failed, braking will illuminate the 'T/O config' Warning light when the aircraft is in take-off configuration.'' The commenter requests the change to alert the pilot of the pontential unsafe condition identified by the proposed AD.

The FAA does not concur. While there may be merit to the commenter's suggestions, this AD is not the appropriate context in which to evaluate those suggestions. Since the suggested changes would alter the actions currently required by this AD, additional rulemaking would be required. The FAA finds that to delay this action would be inappropriate in light of the identified unsafe condition. No change to the final rule is necessary in this regard.

Additional Change to Final Rule

The proposed AD inadvertently referred to Dassault Service Bulletin F10–280 as the appropriate source of service information for accomplishment of both the installation action of paragraph (b)(1) and the AFM revision of paragraph (b)(2). The service bulletin provides accomplishment instructions only for the installation required by paragraph (b)(1). The final rule has been revised accordingly.

Conclusion

After careful review of the available data, including the comments noted above, the FAA has determined that air safety and the public interest require the adoption of the rule with the changes described previously. The FAA has determined that these changes will neither increase the economic burden on any operator nor increase the scope of the AD.

Cost Impact

The following table lists the estimated costs to operators to accomplish the requirements of this AD.

Model	Number of affected airplanes	Action	Work hours	Average labor rate (hour)	Parts cost	Per-airplane cost	Fleet cost
Falcon 10	34	Install light	50	$60	$2,280	$5,280	$179,520
		Revise AFM	1	60		60	2,040
Falcon 50	69	Modify wiring	8	60	226	706	48,714

The cost impact figures discussed above are based on assumptions that no operator has yet accomplished any of the requirements of this AD action, and that no operator would accomplish those actions in the future if this AD were not adopted. The cost impact figures discussed in AD rulemaking actions represent only the time necessary to perform the specific actions actually required by the AD. These figures typically do not include incidental costs, such as the time required to gain access and close up, planning time, or time necessitated by other administrative actions.

Regulatory Impact

The regulations adopted herein will not have a substantial direct effect on the States, on the relationship between the national Government and the States, or on the distribution of power and responsibilities among the various levels of government. Therefore, it is determined that this final rule does not have federalism implications under Executive Order 13132.

For the reasons discussed above, I certify that this action (1) is not a ''significant regulatory action'' under Executive Order 12866; (2) is not a ''significant rule'' under DOT Regulatory Policies and Procedures (44 FR 11034, February 26, 1979); and (3) will not have a significant economic impact, positive or negative, on a substantial number of small entities under the criteria of the Regulatory Flexibility Act. A final evaluation has been prepared for this action and it is contained in the Rules Docket. A copy of it may be obtained from the Rules Docket at the location provided under the caption **ADDRESSES**.

List of Subjects in 14 CFR Part 39

Air transportation, Aircraft, Aviation safety, Incorporation by reference, Safety.

Adoption of the Amendment

Accordingly, pursuant to the authority delegated to me by the Administrator, the Federal Aviation Administration amends part 39 of the Federal Aviation Regulations (14 CFR part 39) as follows:

PART 39—AIRWORTHINESS DIRECTIVES

1. The authority citation for part 39 continues to read as follows:

Authority: 49 U.S.C. 106(g), 40113, 44701.

§ 39.13 [Amended]

2. Section 39.13 is amended by adding the following new airworthiness directive:

2001–01–05 Dassault Aviation: Amendment 39–12075. Docket 98–NM–325–AD.

Applicability: Model Falcon 10 series airplanes, serial numbers 1 through 152 inclusive, on which Dassault Modification M801 (reference Dassault Service Bulletin F10–280, Revision 1, dated February 10, 1999) has not been accomplished; and Model Mystere-Falcon 50 series airplanes, serial numbers 2 through 250 inclusive and 252, on which Dassault Modification M1850 (reference Dassault Service Bulletin F50–240, Revision 1, dated October 7, 1998) has not been accomplished; certificated in any category.

Note 1: This AD applies to each airplane identified in the preceding applicability provision, regardless of whether it has been otherwise modified, altered, or repaired in the area subject to the requirements of this AD. For airplanes that have been modified, altered, or repaired so that the performance of the requirements of this AD is affected, the owner/operator must request approval for an alternative method of compliance in accordance with paragraph (c) of this AD. The request should include an assessment of the effect of the modification, alteration, or repair on the unsafe condition addressed by this AD; and, if the unsafe condition has not been eliminated, the request should include specific proposed actions to address it.

Compliance: Required as indicated, unless accomplished previously.

To prevent takeoff with the parking brake engaged, which could result in an extended takeoff roll or a rejected takeoff, and consequent runway overrun, accomplish the following:

Model Mystere-Falcon 50 Series Airplanes: Modification

(a) For Model Mystere-Falcon 50 series airplanes, within 9 months after the effective date of this AD, modify the aircraft wiring to add the ''park brake handle not pushed forward'' condition in the illumination conditions of the ''T/O CONFIG'' red warning light on the cockpit warning panel in accordance with Dassault Service Bulletin F50–240, Revision 1, dated October 7, 1998.

Note 2: Modification in accordance with Dassault Service Bulletin F50–240, dated April 5, 1995, is acceptable for compliance with the requirements of paragraph (a) of this AD.

Model Falcon 10 Series Airplanes: Modification and Airplane Flight Manual (AFM) Revision

(b) For Dassault Falcon 10 series airplanes, within 9 months after the effective date of this AD, accomplish the requirements of paragraphs (b)(1) and (b)(2) of this AD.

(1) Install a ''NO TAKEOFF'' red light on each pilot's instrument panel and modify the associated aircraft wiring to activate the lights whenever the aircraft is not in the proper configuration for takeoff, in accordance with Dassault Service Bulletin F10–280, Revision 1, dated February 10, 1999.

(2) Revise the Normal Procedures Section of the FAA-approved AFM to include the information specified in Falcon 10 AFM DTM722 Temporary Change No. 17, dated March 31, 1995, which introduces procedures for checking that the ''NO TAKEOFF'' lights are out prior to takeoff; and operate the airplane in accordance with those limitations and procedures.

Note 3: This may be accomplished by inserting a copy of Falcon 10 AFM DTM722 Temporary Change No. 17 in the AFM. When these temporary revisions have been incorporated into general revisions of the AFM, the general revisions may be inserted in the AFM, provided the information contained in the general revision is identical to that specified in Temporary Change No. 17.

Note 4: Modification in accordance with Dassault Service Bulletin F10–280, dated September 6, 1995, is acceptable for compliance with the requirements of paragraph (b)(1) of this AD.

Alternative Methods of Compliance

(c) An alternative method of compliance or adjustment of the compliance time that provides an acceptable level of safety may be used if approved by the Manager, International Branch, ANM–116, FAA, Transport Airplane Directorate. Operators shall submit their requests through an appropriate FAA Principal Maintenance Inspector, who may add comments and then send it to the Manager, International Branch, ANM–116.

Note 5: Information concerning the existence of approved alternative methods of compliance with this AD, if any, may be obtained from the International Branch, ANM–116.

Special Flight Permits

(d) Special flight permits may be issued in accordance with 21.197 and 21.199 of the Federal Aviation Regulations (14 CFR 21.197 and 21.199) to operate the airplane to a location where the requirements of this AD can be accomplished.

Incorporation by Reference

(e) Except as provided by paragraph (b)(2) of this AD: The actions shall be done in accordance with Dassault Service Bulletin F50–240, Revision 1, dated October 7, 1998; and Dassault Service Bulletin F10–280, Revision 1, dated February 10, 1999. This incorporation by reference was approved by the Director of the Federal Register in accordance with 5 U.S.C. 552(a) and 1 CFR part 51. Copies may be obtained from Dassault Falcon Jet, P.O. Box 2000, South Hackensack, New Jersey 07606. Copies may be inspected at the FAA, Transport Airplane Directorate, 1601 Lind Avenue, SW., Renton, Washington; or at the Office of the Federal Register, 800 North Capitol Street, NW., suite 700, Washington, DC.

Note 6: The subject of this AD is addressed in French airworthiness directives 98–300–022(B), dated July 29, 1998, and 98–547–022(B), dated December 30, 1998.

Effective Date

(f) This amendment becomes effective on February 22, 2001.

Issued in Renton, Washington, on January 8, 2001.

Dorenda D. Baker,

Acting Manager, Transport Airplane Directorate, Aircraft Certification Service.

[FR Doc. 01–1075 Filed 1–17–01; 8:45 am]

BILLING CODE 4910–13–U

DEPARTMENT OF TRANSPORTATION

Federal Aviation Administration

14 CFR Part 39

[Docket No. 2000–SW–52–AD; Amendment 39–12074; AD 2001–01–04]

RIN 2120–AA64

Airworthiness Directives; Sikorsky Aircraft Corporation Model S–76A, S–76B, and S–76C Helicopters

AGENCY: Federal Aviation Administration, DOT.

ACTION: Final rule; request for comments.

SUMMARY: This amendment adopts a new airworthiness directive (AD) for Sikorsky Aircraft Corporation (Sikorsky) Model S–76A, S–76B, and S–76C helicopters. This AD requires initial and repetitive inspections of the main landing gear positioning rod assembly (rod assembly) and the side brace rod end (rod end) for corrosion. If any corrosion is found, this AD requires replacing any part that is corroded with an airworthy part before further flight. This amendment is prompted by a landing gear collapse caused by corrosion due to dissimilar metals in the landing gear rod end. The actions specified in this AD are intended to detect corrosion of the threaded joint in the rod assembly to prevent a collapse of the landing gear, and subsequent loss of control of the helicopter during landing.

DATES: Effective February 2, 2001.

The incorporation by reference of certain publications listed in the regulations is approved by the Director of the Federal Register as of February 2, 2001.

Comments for inclusion in the Rules Docket must be received on or before March 19, 2001.

ADDRESSES: Submit comments in triplicate to the Federal Aviation Administration (FAA), Office of the Regional Counsel, Southwest Region, Attention: Rules Docket No. 2000–SW–52–AD, 2601 Meacham Blvd., Room 663, Fort Worth, Texas 76137. You may also send comments electronically to the Rules Docket at the following address: *9-asw-adcomments@faa.gov.*

The service information referenced in this AD may be obtained from BF Goodrich Landing Gear Division, Attn.: Kenneth R. Madej, 8000 Marble Ave., Cleveland, OH 44105, telephone (216) 429–4461, fax (216) 429–4357. This information may be examined at the FAA, Office of the Regional Counsel, Southwest Region, 2601 Meacham Blvd., Room 663, Fort Worth, Texas; or at the Office of the Federal Register, 800 North Capitol Street, NW., suite 700, Washington, DC.

FOR FURTHER INFORMATION CONTACT: Jeffrey Lee, Aviation Safety Engineer, Boston Aircraft Certification Office, 12 New England Executive Park, Burlington, MA 01803, telephone (781) 238–7161, fax (781) 238–7199.

SUPPLEMENTARY INFORMATION: This amendment adopts a new AD for Sikorsky Model S–76A, S–76B, and S–76C helicopters. This AD requires, within 14 days, inspecting the rod assembly, part number (P/N) 1945E–31A or 2071–31, and rod end, P/N 1945E235 or 2071–235, for corrosion. If the rod assembly and rod end were inspected and reassembled in accordance with BF Goodrich Component Maintenance Manual with Illustrated Parts List, 1945/2071 Series Main Landing Gear, No. 32–10–01, (formerly titled Cleveland Pneumatic Maintenance Manual 32–10–01), Revision 4, dated December 15, 1994, within the past 24 months, this AD requires an inspection within 90 days. If any corrosion is found, this AD requires replacing the unairworthy part with an airworthy part before further flight. This AD also requires, at intervals not to exceed 90 days, a repetitive inspection for corrosion on certain rod ends. For other rod ends, this AD requires a repetitive inspection for corrosion at intervals not to exceed 12 months or 1,500 hours time-in-service, whichever occurs first. This AD is prompted by a landing gear collapse on a helicopter that was in a hangar. Analysis showed that corrosion due to dissimilar metals in the rod end caused the rod end to fail with subsequent collapse of the landing gear. The actions specified in this AD are intended to detect corrosion of the threaded joint in the rod assembly and prevent a collapse of the landing gear and subsequent loss of control of the helicopter during landing.

The FAA has reviewed BF Goodrich Landing Gear Service Bulletin No. 76A–32–03, Revision 1, dated September 15, 2000, which describes procedures for inspecting and repairing or replacing the rod end and rod assembly.

Since an unsafe condition has been identified that is likely to exist or develop on other Sikorsky Model S–76A, S–76B, and S–76C helicopters of the same type design, this AD is being issued to detect corrosion of the threaded joint in the rod assembly and prevent a collapse of the landing gear. This AD requires inspecting the rod assembly and rod end for corrosion at specified intervals and replacing, before further flight, any component that has corrosion. The actions must be accomplished in accordance with the service bulletin described previously. The short compliance time involved is required because the previously described critical unsafe condition can adversely affect the structural integrity of the helicopter. Therefore, the actions previously mentioned are required within 14 days, and this AD must be issued immediately.

Since a situation exists that requires the immediate adoption of this regulation, it is found that notice and opportunity for prior public comment hereon are impracticable, and that good cause exists for making this amendment effective in less than 30 days.

The FAA estimates that 180 helicopters will be affected by this AD and that it will take approximately 4.5 work hours per helicopter to inspect the rod assembly and rod end and 1.5 work hours to remove and replace the rod assembly and rod end, if necessary. Required parts will cost approximately $14,600 per helicopter. Based on these figures, the total cost impact of the AD on U.S. operators is estimated to be $2,692,800 ($14,960 per helicopter, assuming inspecting, removing, and replacing the rod assembly and rod end once).

Comments Invited

Although this action is in the form of a final rule that involves requirements affecting flight safety and, thus, was not preceded by notice and an opportunity for public comment, comments are invited on this rule. Interested persons are invited to comment on this rule by submitting such written data, views, or arguments as they may desire. Communications should identify the Rules Docket number and be submitted in triplicate to the address specified under the caption **ADDRESSES**. All communications received on or before the closing date for comments will be considered, and this rule may be amended in light of the comments received. Factual information that supports the commenter's ideas and suggestions is extremely helpful in

evaluating the effectiveness of the AD action and determining whether additional rulemaking action would be needed.

Comments are specifically invited on the overall regulatory, economic, environmental, and energy aspects of the rule that might suggest a need to modify the rule. All comments submitted will be available in the Rules Docket for examination by interested persons. A report that summarizes each FAA-public contact concerned with the substance of this AD will be filed in the Rules Docket.

Commenters wishing the FAA to acknowledge receipt of their mailed comments submitted in response to this rule must submit a self-addressed, stamped postcard on which the following statement is made: ''Comments to Docket No. 2000–SW–52–AD.'' The postcard will be date stamped and returned to the commenter.

The regulations adopted herein will not have a substantial direct effect on the States, on the relationship between the national Government and the States, or on the distribution of power and responsibilities among the various levels of government. Therefore, it is determined that this final rule does not have federalism implications under Executive Order 13132.

The FAA has determined that this regulation is an emergency regulation that must be issued immediately to correct an unsafe condition in aircraft, and that it is not a ''significant regulatory action'' under Executive Order 12866. It has been determined further that this action involves an emergency regulation under DOT Regulatory Policies and Procedures (44 FR 11034, February 26, 1979). If it is determined that this emergency regulation otherwise would be significant under DOT Regulatory Policies and Procedures, a final regulatory evaluation will be prepared and placed in the Rules Docket. A copy of it, if filed, may be obtained from the Rules Docket at the location provided under the caption **ADDRESSES**.

List of Subjects in 14 CFR Part 39

Air transportation, Aircraft, Aviation safety, Incorporation by reference, Safety.

Adoption of the Amendment

Accordingly, pursuant to the authority delegated to me by the Administrator, the Federal Aviation Administration amends part 39 of the Federal Aviation Regulations (14 CFR part 39) as follows:

PART 39—AIRWORTHINESS DIRECTIVES

1. The authority citation for part 39 continues to read as follows:

Authority: 49 U.S.C. 106(g), 40113, 44701.

§ 39.13 [Amended]

2. Section 39.13 is amended by adding a new airworthiness directive to read as follows:

2001–01–04 Sikorsky Aircraft Corporation: Amendment 39–12074. Docket No. 2000–SW–52–AD.

Applicability: Model S–76A, S–76B, and S–76C helicopters up to and including serial number 760513 with positioning rod assembly (rod assembly), part number (P/N) 1945E–31A or 2071–31, or side brace rod end (rod end), P/N 1945E–235 or 2071–235, installed, certificated in any category.

Note 1: This AD applies to each helicopter identified in the preceding applicability provision, regardless of whether it has been otherwise modified, altered, or repaired in the area subject to the requirements of this AD. For helicopters that have been modified, altered, or repaired so that the performance of the requirements of this AD is affected, the owner/operator must request approval for an alternative method of compliance in accordance with paragraph (e) of this AD. The request should include an assessment of the effect of the modification, alteration, or repair on the unsafe condition addressed by this AD; and if the unsafe condition has not been eliminated, the request should include specific proposed actions to address it.

Compliance: Required as indicated, unless accomplished previously.

To detect corrosion of the threaded joint in the rod assembly and prevent a collapse of the landing gear and subsequent loss of control of the helicopter during landing, accomplish the following:

(a) Within 14 days, inspect the rod assembly and rod end for corrosion in accordance with Section 2., Accomplishment Instructions, in BF Goodrich Service Bulletin No. 76A–32–03, Revision 1, dated September 15, 2000 (SB), except that scrapping of corroded parts is not required. Replace any part that is corroded with an airworthy part before further flight.

(b) Within 90 days, if the rod assembly and rod end were inspected and reassembled in accordance with BF Goodrich Component Maintenance Manual with Illustrated Parts List, 1945/2071 Series Main Landing Gear, No. 32–10–01, (formerly titled Cleveland Pneumatic Maintenance Manual 32–10–01), Revision 4, dated December 15, 1994, within the past 24 months, inspect the rod assembly and rod end in accordance with Section 2. of the SB. Scrapping of corroded parts is not required. Replace any part that is corroded with an airworthy part before further flight.

(c) At intervals not to exceed 90 days, for rod ends that are not reassembled with Mastinox sealant or reassembled with Mastinox sealant but without cadmium plate restoration, inspect the rod assembly and rod end for corrosion in accordance with the Section 2. of the SB, except that scrapping of corroded parts is not required. Replace any part that is corroded with an airworthy part before further flight.

(d) At intervals not to exceed 12 months or 1,500 hours time-in-service, whichever occurs first, for rod ends assembled with Mastinox sealant and cadmium plate restoration or for rod ends reassembled with Mastinox but that did not previously require rework due to corrosion, inspect the rod assembly and rod end for corrosion in accordance with the Section 2. of the SB, except that scrapping of corroded parts is not required. Replace any part that is corroded with an airworthy part before further flight.

(e) An alternative method of compliance or adjustment of the compliance time that provides an acceptable level of safety may be used if approved by the Manager, Boston Aircraft Certification Office (ACO), FAA. Operators shall submit their requests through an FAA Principal Maintenance Inspector, who may concur or comment and then send it to the Manager, Boston ACO.

Note 2: Information concerning the existence of approved alternative methods of compliance with this AD, if any, may be obtained from the Boston ACO.

(f) Special flight permits may be issued in accordance with §§ 21.197 and 21.199 of the Federal Aviation Regulations (14 CFR 21.197 and 21.199) to operate the helicopter to a location where the requirements of this AD can be accomplished.

(g) The inspections shall be done in accordance with Section 2., Accomplishment Instructions, in BF Goodrich Service Bulletin No. 76A–32–03, Revision 1, dated September 15, 2000. This incorporation by reference was approved by the Director of the Federal Register in accordance with 5 U.S.C. 552(a) and 1 CFR part 51. Copies may be obtained from BF Goodrich Landing Gear Division, Attn.: Kenneth R. Madej, 8000 Marble Ave., Cleveland, OH 44105, telephone (216) 429–4461, fax (216) 429–4357. Copies may be inspected at the FAA, Office of the Regional Counsel, Southwest Region, 2601 Meacham Blvd., Room 663, Fort Worth, Texas; or at the Office of the Federal Register, 800 North Capitol Street, NW., suite 700, Washington, DC.

(h) This amendment becomes effective on February 2, 2001.

Issued in Fort Worth, Texas, on January 5, 2001.

Henry A. Armstrong,

Manager, Rotorcraft Directorate, Aircraft Certification Service.

[FR Doc. 01–1121 Filed 1–17–01; 8:45 am]

BILLING CODE 4910–13–U

DEPARTMENT OF TRANSPORTATION

Federal Aviation Administration

14 CFR Part 39

[Docket No. 2000–NM–292–AD; Amendment 39–12079; AD 2001–01–09]

RIN 2120–AA64

Airworthiness Directives; Airbus Model A330–301, –321, and –322 Series Airplanes; and Model A340–211, –212, –213, –311, –312, and –313 Series Airplanes

AGENCY: Federal Aviation Administration, DOT.

ACTION: Final rule; request for comments.

SUMMARY: This amendment supersedes an existing airworthiness directive (AD), applicable to all Airbus Model A330–301, –321, and –322 series airplanes; and Model A340–211, –212, –213, –311, –312, and –313 series airplanes. The existing AD requires repetitive replacements of the yaw damper actuator installed on active position with a new or overhauled actuator. This action adds a requirement, for certain airplanes, to install upgraded flight control primary computers, which terminates the requirement for the repetitive actuator replacements for those airplanes. This action is necessary to prevent hydraulic leakage from the yaw damper actuator installed on active position, due to premature wear of the dynamic seals between the actuator piston and the piston bearing. Hydraulic leakage could lead to the complete loss of the green hydraulic circuit, which could result in reduced controllability of the airplane. This action is intended to address the identified unsafe condition.

DATES: Effective February 2, 2001.

The incorporation by reference of certain publications, as listed in the regulations, is approved by the Director of the Federal Register as of February 2, 2001.

The incorporation by reference of certain other publications, as listed in the regulations, was approved previously by the Director of the Federal Register as of January 24, 2000 (64 FR 71004, December 20, 1999).

Comments for inclusion in the Rules Docket must be received on or before February 20, 2001.

ADDRESSES: Submit comments in triplicate to the Federal Aviation Administration (FAA), Transport Airplane Directorate, ANM–114, Attention: Rules Docket No. 2000–NM–292–AD, 1601 Lind Avenue, SW., Renton, Washington 98055–4056. Comments may be inspected at this location between 9:00 a.m. and 3:00 p.m., Monday through Friday, except Federal holidays. Comments may be submitted via fax to (425) 227–1232. Comments may also be sent via the Internet using the following address: *9-anm-iarcomment@faa.gov.* Comments sent via fax or the Internet must contain ''Docket No. 2000-NM–292-AD'' in the subject line and need not be submitted in triplicate. Comments sent via the Internet as attached electronic files must be formatted in Microsoft Word 97 for Windows or ASCII text.

The service information referenced in this AD may be obtained from Airbus Industrie, 1 Rond Point Maurice Bellonte, 31707 Blagnac Cedex, France. This information may be examined at the FAA, Transport Airplane Directorate, 1601 Lind Avenue SW., Renton, Washington; or at the Office of the **Federal Register**, 800 North Capitol Street NW., suite 700, Washington, DC.

FOR FURTHER INFORMATION CONTACT: Dan Rodina, Aerospace Engineer, International Branch, ANM–116, FAA, Transport Airplane Directorate, 1601 Lind Avenue SW., Renton, Washington 98055–4056; telephone (425) 227–2125; fax (425) 227–1149.

SUPPLEMENTARY INFORMATION: On December 10, 1999, the FAA issued AD 99–26–12, amendment 39–11471 (64 FR 71004, December 20, 1999). That AD is applicable to all Airbus Model A330–301, –321, and –322 series airplanes; and Model A340–211, –212, –213, –311, –312, and –313 series airplanes. That AD requires repetitive replacements of the yaw damper actuator installed on active position with a new or overhauled actuator. That AD was prompted by issuance of mandatory continuing airworthiness information by a foreign civil airworthiness authority. The requirements of that AD are intended to prevent hydraulic leakage from the yaw damper actuator installed on active position due to premature wear of the dynamic seals between the actuator piston and the piston bearing. Hydraulic leakage could lead to complete loss of the green hydraulic circuit, which could result in reduced controllability of the airplane.

Actions Since Issuance of Previous Rule

As described in the proposed NPRM to AD 99–26–12, hydraulic fluid leakage from the yaw damper actuator has been attributed to premature wear of certain dynamic seals. Investigation revealed a link between the leakage and small inputs sent by the flight control primary computers (FCPC).

In the preamble to AD 99–26–12, the FAA specified that the actions required by that AD were considered ''interim action'' and that the manufacturer was developing a modification to positively address the unsafe condition. The FAA indicated that it may consider further rulemaking action once the modification was developed, approved, and available. The manufacturer now has developed such a modification for Model A330 series airplanes, and the FAA has determined that further rulemaking action is indeed necessary; this proposed AD follows from that determination.

A similar modification has been developed for Model A340 series airplanes. There currently are no such airplanes on the U.S. Register. The A340 modification will be included in the FAA Required Modification List for these airplanes. Actions identified on this list must be accomplished before the airplane may be imported into the United States.

Explanation of Relevant Service Information

Airbus has issued the following service bulletins for Model A330 series airplanes:

Service bulletin	Revision level	Date
A330–27–3068	Original ..	July 29, 1999.
A330–27–3071	Original ..	November 19, 1999.
A330–27–3055	02	March 24, 2000.

Service Bulletins A330–27–3068 and A330–27–3071 describe procedures for obtaining new software standards for the FCPCs by replacing or reprogramming the on-board replaceable modules, or by replacing the FCPCs with new, improved FCPCs. The actions specified by these service bulletins are intended to prevent premature wear and subsequent leakage of the active and damping yaw actuators.

Revision 02 of Service Bulletin A330–27–3055 was issued to, among other things, add a detailed visual inspection of the FCPC part numbers and revise certain repair procedures for replacing the yaw damper actuator. The actions otherwise are the same as those described in Revision 01 of the service bulletin, which was referred to in AD 99–26–12 as the appropriate source of service information for replacing the yaw damper actuator.

The DGAC classified the service bulletins as mandatory and issued French airworthiness directive 2000–076–115(B) R1, dated March 22, 2000, to ensure the continued airworthiness of

affected Model A330 series airplanes in France.

FAA's Conclusions

These airplane models are manufactured in France and are type certificated for operation in the United States under the provisions of § 21.29 of the Federal Aviation Regulations (14 CFR 21.19) and the applicable bilateral airworthiness agreement. Pursuant to this bilateral airworthiness agreement, the DGAC has kept the FAA informed of the situation described above. The FAA has examined the findings of the DGAC, reviewed all available information, and determined that AD action is necessary for products of this type design that are certificated for operation in the United States.

Explanation of Requirements of the Rule

Since an unsafe condition has been identified that is likely to exist or develop on other airplanes of the same type design registered in the United States, this AD is being issued to prevent hydraulic leakage from the yaw damper actuator installed on active position, which could lead to complete loss of the green hydraulic circuit and consequent reduced controllability of the airplane. This AD supersedes AD 99–26–12 to continue to require repetitive replacements of the yaw damper actuator installed on active position with a new or overhauled yaw damper actuator. This AD adds a requirement, for affected Model A330 series airplanes, to install upgraded FCPCs, which terminates the requirement for repetitive actuator replacements for those airplanes. The actions are required to be accomplished in accordance with the service bulletins described previously.

Cost Impact

None of the airplanes affected by this action are on the U.S. Register. All airplanes included in the applicability of this rule currently are operated by non-U.S. operators under foreign registry; therefore, they are not directly affected by this AD action. However, the FAA considers that this rule is necessary to ensure that the unsafe condition is addressed in the event that any of these subject airplanes are imported and placed on the U.S. Register in the future.

Should an affected airplane be imported and placed on the U.S. Register in the future, it would require approximately 2 work hours to accomplish the required actions, at an average labor rate of $60 per work hour. Required parts would cost approximately $390 per airplane. Based on these figures, the cost impact of this AD is estimated to be $510 per airplane.

Determination of Rule's Effective Date

Since this AD action does not affect any airplane that is currently on the U.S. register, it has no adverse economic impact and imposes no additional burden on any person. Therefore, prior notice and public procedures hereon are unnecessary and the amendment may be made effective in less than 30 days after publication in the **Federal Register**.

Comments Invited

Although this action is in the form of a final rule and was not preceded by notice and opportunity for public comment, comments are invited on this rule. Interested persons are invited to comment on this rule by submitting such written data, views, or arguments as they may desire. Communications shall identify the Rules Docket number and be submitted in triplicate to the address specified under the caption **ADDRESSES**. All communications received on or before the closing date for comments will be considered, and this rule may be amended in light of the comments received. Factual information that supports the commenter's ideas and suggestions is extremely helpful in evaluating the effectiveness of the AD action and determining whether additional rulemaking action would be needed.

Submit comments using the following format:

- Organize comments issue-by-issue. For example, discuss a request to change the compliance time and a request to change the service bulletin reference as two separate issues.
- For each issue, state what specific change to the AD is being requested.
- Include justification (*e.g.,* reasons or data) for each request.

Comments are specifically invited on the overall regulatory, economic, environmental, and energy aspects of the rule that might suggest a need to modify the rule. All comments submitted will be available, both before and after the closing date for comments, in the Rules Docket for examination by interested persons. A report that summarizes each FAA-public contact concerned with the substance of this AD will be filed in the Rules Docket.

Commenters wishing the FAA to acknowledge receipt of their comments submitted in response to this rule must submit a self-addressed, stamped postcard on which the following statement is made: ''Comments to Docket No. 2000–NM–292–AD.'' The postcard will be date stamped and returned to the commenter.

Regulatory Impact

The regulations adopted herein will not have a substantial direct effect on the States, on the relationship between the national Government and the States, or on the distribution of power and responsibilities among the various levels of government. Therefore, it is determined that this final rule does not have federalism implications under Executive Order 13132.

For the reasons discussed above, I certify that this action (1) is not a ''significant regulatory action'' under Executive Order 12866; (2) is not a ''significant rule'' under DOT Regulatory Policies and Procedures (44 FR 11034, February 26, 1979); and (3) will not have a significant economic impact, positive or negative, on a substantial number of small entities under the criteria of the Regulatory Flexibility Act. A final evaluation has been prepared for this action and it is contained in the Rules Docket. A copy of it may be obtained from the Rules Docket at the location provided under the caption **ADDRESSES**.

List of Subjects in 14 CFR Part 39

Air transportation, Aircraft, Aviation safety, Incorporation by reference, Safety.

Adoption of the Amendment

Accordingly, pursuant to the authority delegated to me by the Administrator, the Federal Aviation Administration amends part 39 of the Federal Aviation Regulations (14 CFR part 39) as follows:

PART 39—AIRWORTHINESS DIRECTIVES

1. The authority citation for part 39 continues to read as follows:

Authority: 49 U.S.C. 106(g), 40113, 44701.

§ 39.13 [Amended]

2. Section 39.13 is amended by removing amendment 39–11471 (64 FR 71004, December 20, 1999), and by adding a new airworthiness directive (AD), amendment 39–12079, to read as follows:

2001–01–09 Airbus Industrie: Amendment 39–12079. Docket 2000–NM–292–AD. Supersedes AD 99–26–12, Amendment 39–11471.

Applicability: The following airplanes, certificated in any category: Model A330–301, –321, and –322 series airplanes; excluding those on which Airbus Modification 46964 or 47221 has been installed; and Model A340–211, –212, –213, –311, –312, and –313 series airplanes.

Note 1: This AD applies to each airplane identified in the preceding applicability provision, regardless of whether it has been otherwise modified, altered, or repaired in the area subject to the requirements of this AD. For airplanes that have been modified, altered, or repaired so that the performance of the requirements of this AD is affected, the owner/operator must request approval for an alternative method of compliance in accordance with paragraph (d) of this AD. The request should include an assessment of the effect of the modification, alteration, or repair on the unsafe condition addressed by this AD; and, if the unsafe condition has not been eliminated, the request should include specific proposed actions to address it.

Compliance: Required as indicated, unless accomplished previously.

To prevent hydraulic leakage from the yaw damper actuator, which could lead to complete loss of the green hydraulic circuit and consequent reduced controllability of the airplane, accomplish the following:

Restatement of Requirements of AD 99–26–12

Repetitive Replacement

(a) Prior to the accumulation of 6,500 total flight hours, or within 500 flight hours after January 24, 2000 (the effective date of AD 99–26–12, amendment 39–11471), whichever occurs later, replace the yaw damper actuator installed on active position with a new or overhauled yaw damper actuator in accordance with Airbus Service Bulletin A330–27–3055, Revision 01, dated July 1, 1998, or Revision 02, dated March 24, 2000 (for Model A330 series airplanes); or A340–27–4063, Revision 01, dated July 1, 1998 (for Model A340 series airplanes); as applicable. Thereafter, repeat the replacement at intervals not to exceed 6,500 flight hours. For Model A330 series airplanes, after the effective date of this AD, only Revision 02 of Service Bulletin A330–27–3055 may be used.

Note 2: Replacement of yaw dampers accomplished prior to January 24, 2000, in accordance with Airbus Service Bulletin A330–27–3055, dated August 26, 1997 (for Model A330 series airplanes), or Airbus Service Bulletin A340–27–4063, dated August 26, 1997 (for Model A340 series airplanes); as applicable; is an acceptable method of compliance for the initial replacement required by paragraph (a) of this AD.

New Requirements of This AD

Terminating Action

(b) For Model A330 series airplanes: Within 18 months after the effective date of this AD, install 3 upgraded flight control primary computers (FCPC), in accordance with Airbus Service Bulletin A330–27–3071, dated November 19, 1999, or A330–27–3068, dated July 29, 1999; as applicable. Accomplishment of the installation terminates the requirements of this AD for Model A330 series airplanes.

Spares

(c) As of the effective date of this AD, no person may install an FCPC, part number LA2K01500A40000 or LA2K1A100D20000, on any Model A330 series airplane.

Alternative Methods of Compliance

(d) An alternative method of compliance or adjustment of the compliance time that provides an acceptable level of safety may be used if approved by the Manager, International Branch, ANM–116, FAA, Transport Airplane Directorate. Operators shall submit their requests through an appropriate FAA Principal Maintenance Inspector, who may add comments and then send it to the Manager, International Branch, ANM–116.

Note 3: Information concerning the existence of any approved alternative methods of compliance with this AD may be obtained from the International Branch, ANM–116.

Special Flight Permits

(e) Special flight permits may be issued in accordance with §§ sections 21.197 and 21.199 of the Federal Aviation Regulations (14 CFR 21.197 and 21.199) to operate the airplane to a location where the requirements of this AD can be accomplished.

Incorporation by Reference

(f) The actions shall be done in accordance with the following Airbus service bulletins, as applicable:

Service bulletin number	Revision level	Date
A330–27–3055	Revision 01	July 1, 1998
A330–27–3055	Revision 02	March 24, 2000
A340–27–4063	Revision 01	July 1, 1998
A330–27–3071	Original	November 19, 1999
A330–27–3068	Original	July 29, 1999

(1) The incorporation by reference of Airbus Service Bulletin A330–27–3055, Revision 02, dated March 24, 2000; Airbus Service Bulletin A330–27–3071, dated November 19, 1999; and Airbus Service Bulletin A330–27–3068, dated July 29, 1999; is approved by the Director of the Federal Register in accordance with 5 U.S.C. 552(a) and 1 CFR part 51.

(2) The incorporation by reference of Airbus Service Bulletin A330–27–3055, Revision 01, dated July 1, 1998; and Airbus Service Bulletin A340–27–4063, Revision 01, dated July 1, 1998; was approved previously by the Director of the Federal Register as of January 24, 2000 (64 FR 71004, December 20, 1999).

(3) Copies of any of these service bulletins may be obtained from Airbus Industrie, 1 Rond Point Maurice Bellonte, 31707 Blagnac Cedex, France. Copies may be inspected at the FAA, Transport Airplane Directorate, 1601 Lind Avenue, SW., Renton, Washington; or at the Office of the Federal Register, 800 North Capitol Street, NW., suite 700, Washington, DC.

Note 4: The subject of this AD is addressed in French airworthiness directives 1998–100–067(B) R2, dated May 19, 1999; 98–104–083(B), dated February 25, 1998; and 2000–076–115(B) R1, dated March 22, 2000.

Effective Date

(g) This amendment becomes effective on February 2, 2001.

Issued in Renton, Washington, on January 9, 2001.

Donald L. Riggin,

Acting Manager, Transport Airplane Directorate, Aircraft Certification Service.

[FR Doc. 01–1233 Filed 1–17–01; 8:45 am]

BILLING CODE 4910–13–U

DEPARTMENT OF TRANSPORTATION

Federal Aviation Administration

14 CFR Part 39

[Docket No. 2000–NM–72–AD; Amendment 39–12077; AD 2001–01–07]

RIN 2120–AA64

Airworthiness Directives; Airbus Model A300 B2, A300 B4, A300 B4–600, A300 B4–600R, A300 F4–600R, and A310 Series Airplanes

AGENCY: Federal Aviation Administration, DOT.

ACTION: Final rule.

SUMMARY: This amendment adopts a new airworthiness directive (AD), applicable to certain Airbus Model A300 B2, A300 B4, A300 B4–600, A300 B4–600R, A300 F4–600R, and A310 series airplanes, that requires modification of the escape slides. The actions specified by this AD are

intended to prevent deflation of the escape slide after deployment, which could result in a delay during an emergency evacuation. This action is intended to address the identified unsafe condition.

DATES: Effective February 22, 2001.

The incorporation by reference of certain publications listed in the regulations is approved by the Director of the Federal Register as of February 22, 2001.

ADDRESSES: The service information referenced in this AD may be obtained from Airbus Industrie, 1 Rond Point Maurice Bellonte, 31707 Blagnac Cedex, France. This information may be examined at the Federal Aviation Administration (FAA), Transport Airplane Directorate, Rules Docket, 1601 Lind Avenue, SW., Renton, Washington; or at the Office of the Federal Register, 800 North Capitol Street, NW., suite 700, Washington, DC.

FOR FURTHER INFORMATION CONTACT: Norman B. Martenson, Manager, International Branch, ANM–116, FAA, 1601 Lind Avenue, SW., Renton, Washington 98055–4056; telephone (425) 227–2110; fax (425) 227–1149.

SUPPLEMENTARY INFORMATION: A proposal to amend part 39 of the Federal Aviation Regulations (14 CFR part 39) to include an airworthiness directive (AD) that is applicable to certain Airbus Model A300 B2 and A300 B4 (A300); Model A300 B4–600, A300 B4–600R, and A300 F4–600R (A300–600); and Model A310 series airplanes was published in the **Federal Register** on October 31, 2000 (65 FR 64901). That action proposed to require modification of the escape slides.

Comments

Interested persons have been afforded an opportunity to participate in the making of this amendment. No comments were submitted in response to the proposal or the FAA's determination of the cost to the public.

Conclusion

The FAA has determined that air safety and the public interest require the adoption of the rule as proposed.

Cost Impact

The FAA estimates that 126 airplanes of U.S. registry will be affected by this AD, that it will take approximately 1 work hour per slide to accomplish the required actions, and that the average labor rate is $60 per work hour. Required parts will cost approximately $124 to $185 per slide. Each Model A300 and A300–600 series airplane has 6 escape doors, and each Model A310 series airplane has 4 escape doors. Based on these figures, the cost impact of the proposed AD on U.S. operators is estimated to be between $736 and $1,470 per airplane.

The cost impact figure discussed above is based on assumptions that no operator has yet accomplished any of the requirements of this AD action, and that no operator would accomplish those actions in the future if this AD were not adopted. The cost impact figures discussed in AD rulemaking actions represent only the time necessary to perform the specific actions actually required by the AD. These figures typically do not include incidental costs, such as the time required to gain access and close up, planning time, or time necessitated by other administrative actions.

Regulatory Impact

The regulations adopted herein will not have a substantial direct effect on the States, on the relationship between the national Government and the States, or on the distribution of power and responsibilities among the various levels of government. Therefore, it is determined that this final rule does not have federalism implications under Executive Order 13132.

For the reasons discussed above, I certify that this action (1) is not a ''significant regulatory action'' under Executive Order 12866; (2) is not a ''significant rule'' under DOT Regulatory Policies and Procedures (44 FR 11034, February 26, 1979); and (3) will not have a significant economic impact, positive or negative, on a substantial number of small entities under the criteria of the Regulatory Flexibility Act. A final evaluation has been prepared for this action and it is contained in the Rules Docket. A copy of it may be obtained from the Rules Docket at the location provided under the caption **ADDRESSES**.

List of Subjects in 14 CFR Part 39

Air transportation, Aircraft, Aviation safety, Incorporation by reference, Safety.

Adoption of the Amendment

Accordingly, pursuant to the authority delegated to me by the Administrator, the Federal Aviation Administration amends part 39 of the Federal Aviation Regulations (14 CFR part 39) as follows:

PART 39—AIRWORTHINESS DIRECTIVES

1. The authority citation for part 39 continues to read as follows:

Authority: 49 U.S.C. 106(g), 40113, 44701.

§ 39.13 [Amended]

2. Section 39.13 is amended by adding the following new airworthiness directive:

2001–01–07 Airbus Industrie: Amendment 39–12077. Docket 2000–NM–72–AD.

Applicability: The following airplanes, certificated in any category:

Model	Equipped with any BFGoodrich slide having part number	Excluding airplanes modified in accordance with
A300 B2 series A300 B4 series	7A1296–001 7A1296–002 7A1296–003 7A1296–004 7A1298–001 7A1298–002 7A1298–003 7A1298–004	Airbus Service Bulletin A300–25–0466, Revision 01, dated December 1, 1999; or BFGoodrich Service Bulletin 7A1296/7A1298–25–298, dated January 15, 1999.

Model	Equipped with any BFGoodrich slide having part number	Excluding airplanes modified in accordance with
A300 B4–600 series	7A1296–001.	
A300 B4–600R series	7A1296–002.	
A300 F4–600R series	7A1296–003	Airbus Service Bulletin A300–25–6146, Revision 01, dated December 1, 1999; or BFGoodrich Service Bulletin7A1296/7A1298–25–298, dated January 15, 1999.
	7A1296–004	
	7A1298–001	
	7A1298–002	
	7A1298–003	
	7A1298–004	
A310 series	7A1298–001	Airbus Service Bulletin A310–25–2133, dated June 21, 1999; or BFGoodrich Service Bulletin 7A1296/7A1298–25–298, dated January 15, 1999.
	7A1298–002	
	7A1298–003	
	7A1298–004	

Note 1: This AD applies to each airplane identified in the preceding applicability provision, regardless of whether it has been otherwise modified, altered, or repaired in the area subject to the requirements of this AD. For airplanes that have been modified, altered, or repaired so that the performance of the requirements of this AD is affected, the owner/operator must request approval for an alternative method of compliance in accordance with paragraph (c) of this AD. The request should include an assessment of the effect of the modification, alteration, or repair on the unsafe condition addressed by this AD; and, if the unsafe condition has not been eliminated, the request should include specific proposed actions to address it.

Compliance: Required as indicated, unless accomplished previously.

To prevent deflation of the escape slide after deployment, which could result in a delay during an emergency evacuation, accomplish the following:

Modification

(a) Within 34 months after the effective date of this AD, modify the escape slides in accordance with the applicable Airbus service bulletin listed in Table 1 of this AD, as follows:

TABLE 1.—SERVICE BULLETINS

Model	Service bulletin	Revision level	Date
A300	A300–25–0466	01	December 1, 1999.
A300–600	A300–25–6146	01	December 1, 1999.
A310	A310–25–2133	Original	June 21, 1999.

Note 2: The Airbus service bulletins refer to BFGoodrich Service Bulletin 7A1296/7A1298–25–298, dated January 15, 1999, as an additional source of service information for modifying the escape slides.

(b) As of the effective date of this AD, no person shall install, on any airplane, a BFGoodrich escape slide having a part number listed in Table 2 of this AD, unless that slide has been modified in accordance with this AD:

TABLE 2.—SLIDE PART NUMBERS

7A1296–001
7A1296–002
7A1296–003
7A1296–004
7A1298–001
7A1298–002
7A12 98–003
7A1298–004

Alternative Methods of Compliance

(c) An alternative method of compliance or adjustment of the compliance time that provides an acceptable level of safety may be used if approved by the Manager, International Branch, ANM–116, Transport Airplane Directorate, FAA. Operators shall submit their requests through an appropriate FAA Principal Maintenance Inspector, who may add comments and then send it to the Manager, International Branch, ANM–116.

Note 3: Information concerning the existence of approved alternative methods of compliance with this AD, if any, may be obtained from the International Branch, ANM–116.

Special Flight Permits

(d) Special flight permits may be issued in accordance with §§ 21.197 and 21.199 of the Federal Aviation Regulations (14 CFR 21.197 and 21.199) to operate the airplane to a location where the requirements of this AD can be accomplished.

Incorporation by Reference

(e) The modification shall be done in accordance with Airbus Service Bulletin A300–25–0466, Revision 01, dated December 1, 1999; Airbus Service Bulletin A300–25–6146, Revision 01, dated December 1, 1999; or Airbus Service Bulletin A310–25–2133, dated June 21, 1999; as applicable. This incorporation by reference was approved by the Director of the Federal Register in accordance with 5 U.S.C. 552(a) and 1 CFR part 51. Copies may be obtained from Airbus Industrie, 1 Rond Point Maurice Bellonte, 31707 Blagnac Cedex, France. Copies may be inspected at the FAA, Transport Airplane Directorate, 1601 Lind Avenue, SW., Renton, Washington; or at the Office of the **Federal Register**, 800 North Capitol Street, NW., suite 700, Washington, DC.

Note 4: The subject of this AD is addressed in French airworthiness directive 2000–059–302(B), dated February 9, 2000.

Effective Date

(f) This amendment becomes effective on February 22, 2001.

Issued in Renton, Washington, on January 9, 2001.

Donald L. Riggin,

Acting Manager, Transport Airplane Directorate, Aircraft Certification Service.

[FR Doc. 01–1232 Filed 1–17–01; 8:45 am]

BILLING CODE 4910–13–P

DEPARTMENT OF THE TREASURY

Internal Revenue Service

26 CFR part 1

[TD 8941]

RIN 1545–AX87

Obligations of States and Political Subdivisions

AGENCY: Internal Revenue Service (IRS), Treasury.

ACTION: Final and temporary regulations.

SUMMARY: This document contains temporary regulations that provide guidance to issuers of tax-exempt bonds for output facilities. This document also contains final regulations that provide guidance to certain nongovernmental persons that are engaged in the local furnishing of electric energy or gas using facilities financed with state or local government bonds. These regulations will affect issuers of tax-exempt bonds and nongovernmental persons engaged in the local furnishing of electric energy or gas after the effective date.

The text of the temporary regulations also serves as the text of the proposed regulations set forth in the notice of proposed rulemaking on this subject in the Proposed Rules section of this issue of the **Federal Register**.

DATES: *Effective Date:* These regulations are effective January 19, 2001.

Applicability Date: For dates of applicability, see §§ 1.141–15T, 1.142(f)(4)–1(g), and 1.150–5(b).

FOR FURTHER INFORMATION CONTACT: Rose M. Weber (202) 622–3980 (not a toll-free number).

SUPPLEMENTARY INFORMATION:

Paperwork Reduction Act

The collection of information in this rule has been reviewed and, pending receipt and evaluation of public comments, approved by the Office of Management and Budget (OMB) under 44 U.S.C. 3507 and assigned control number 1545– .

The collection of information in this regulation is in § 1.142(f)(4)–1. This information is required to enable the IRS to identify persons engaged in the local furnishing of electric energy or gas that use facilities financed with exempt facility bonds under section 142(a)(8) and that expand their service area in a manner inconsistent with the requirements of sections 142(a)(8) and (f) who have made an election to ensure that those bonds will continue to be treated as exempt facility bonds. The data collected will be used by the IRS as the mechanism for identifying bonds that will remain tax-exempt notwithstanding a service area expansion that is inconsistent with the requirements of sections 142(a)(8) and (f). The collection of information is mandatory. The likely respondents are business institutions.

Comments on the collection of information should be sent to the Office of Management and Budget, Attn: Desk Officer for the Department of the Treasury, Office of Information and Regulatory Affairs, Washington, DC 20503, with copies to the Internal Revenue Service, Attn: IRS Reports Clearance Officer, W:CAR:MP:FP:S:O Washington, DC 20224. Comments on the collection of information should be received by March 19, 2001. Comments are specifically requested concerning:

Whether the collection of information is necessary for the proper performance of the functions of the Internal Revenue Service, including whether the information will have practical utility;

The accuracy of the estimated burden associated with the collection of information (see below);

How the quality, utility, and clarity of the information to be collected may be enhanced;

How the burden of complying with the collection of information may be minimized, including through the application of automated collection techniques or other forms of information technology; and

Estimates of capital or start-up costs and costs of operation, maintenance, and purchase of services to provide information.

Estimated total annual reporting burden is 15 hours.

Estimated average annual burden hours per respondent is 1 hour.

Estimated number of respondents is 15.

Estimated annual frequency of responses is on occasion.

An agency may not conduct or sponsor, and a person is not required to respond to, a collection of information unless it displays a valid control number assigned by the Office of Management and Budget.

Books or records relating to a collection of information must be retained as long as their contents may become material in the administration of any internal revenue law. Generally, tax returns and tax return information are confidential, as required by 26 U.S.C. 6103.

Background

This document amends the Income Tax Regulations (26 CFR part 1) under section 141 by providing special rules for tax-exempt bonds issued for output facilities. This document also amends the Income Tax Regulations under section 142(f)(4) by providing rules to make the election provided in that section for nongovernmental persons engaged in local furnishing of electric energy or gas using facilities financed with tax-exempt bonds.

On January 22, 1998, temporary regulations (TD 8757) (the 1998 temporary regulations) were published in the **Federal Register** (63 FR 3256) to provide guidance under the Internal Revenue Code of 1986 regarding the application of the private activity bond tests under section 141(b)(1) and (2) to output contracts for output facilities; the application of the $15 million limit under section 141(b)(4) to output facility financings; the election provided in section 142(f)(4) for nongovernmental persons engaged in local furnishing of electric energy or gas using facilities financed with tax-exempt bonds; and the filing location for certain notices and elections. A notice of proposed rulemaking (REG–110965–97) cross-referencing the temporary regulations was published in the **Federal Register** on the same day (63 FR 3296). On April 28, 1998, the IRS held a public hearing on the proposed regulations. Written comments responding to the notice of proposed rulemaking were also received. After consideration of all the comments, the 1998 temporary regulations are revised by this Treasury decision. The new temporary regulations are referred to below as the ''revised regulations.'' The revisions are discussed below.

Explanation of Provisions

A. Section 1.141–7T Special Rules for Output Facilities

1. Benefits and Burdens Test—Transmission Contracts

Under the 1998 temporary regulations, an agreement to provide firm or priority transmission services is generally treated as a take or take or pay contract. Commentators suggested that firm or priority transmission contracts should not automatically be treated as take or take or pay contracts. They recommended that the same standards that apply to determine whether generation contracts result in private business use, including the requirements contract provisions, should also apply to transmission contracts. The revised regulations adopt this recommendation by deleting the provision that generally treats all contracts for firm or priority transmission service as take or take or pay contracts.

2. Retail Requirements Contracts

The 1998 temporary regulations provide that a retail requirements contract generally meets the benefits and burdens test to the extent it obligates the purchaser to make payments that are not contingent on the purchaser's output requirements. Commentators requested clarification regarding the application of this rule to reasonable contract damages and termination provisions. The revised regulations clarify that a retail requirements contract does not meet the benefits and burdens test by reason of (1) a provision that requires the purchaser to pay reasonable and customary damages (including liquidated damages) in the event of a default, or (2) a provision that permits the purchaser to pay a specified amount to terminate the contract while the purchaser has requirements, in each case if the amount of the payment is reasonably related to the purchaser's obligation to buy requirements that is discharged by the payment.

3. Output Contract Properly Characterized as a Lease

Under the 1998 temporary regulations, output contracts that provide the purchaser with specific rights to control the output of a facility or with other specific performance rights to the use of output of the facility are generally taken into account under the private business tests, even if the benefits and burdens test is not met. Commentators requested clarification of the scope of this rule.

The revised regulations amend the rule and clarify its application by specifying that an output contract that is properly characterized as a lease for federal income tax purposes is tested under §§ 1.141–3 and 1.141–4 to determine whether it is taken into account under the private business tests.

4. Special Rule for Facilities With Significant Unutilized Capacity

The 1998 temporary regulations provide that, if an issuer reasonably expects on the issue date that persons that are treated as private business users will purchase more than 30 percent of the actual output of the facility, the Commissioner may determine the number of units produced or to be produced by the facility in one year on a reasonable basis other than by reference to nameplate capacity, such as the average expected annual output of the facility. The revised regulations change the 30 percent threshold to 20 percent.

5. Special Rule for Facilities With a Limited Source of Supply

Under the 1998 temporary regulations, the available output of a facility that is constrained by a limited source of supply must be determined by reasonably taking those constraints into account. Commentators requested clarification of the meaning of limited source of supply. For example, they asked whether the term includes not only physical but also economic limitations.

The revised regulations clarify that a limited source of supply includes a physical limitation, such as the flow of water, but not an economic limitation, such as the cost of coal or gas.

6. Measurement of Private Business Use

The 1998 temporary regulations provide that, if an output contract results in private business use, the amount of such use generally is the capacity that must be reserved for the nongovernmental person under prudent reliability standards. Commentators stated that this provision is difficult to apply and may overstate the amount of private business use. They suggested that the amount of private business use should be the amount of output actually purchased under the contract.

The revised regulations provide that, if an output contract results in private business use, the amount of private business use generally is the amount of output purchased under the contract.

7. Exception for Small Purchases of Output

The 1998 temporary regulations provide that output contracts are not taken into account under the private business tests if the purchaser is not required to make a substantially certain payment in any year that is greater than 0.5 percent of the average annual debt service on an issue that finances the facility. Some commentators suggested that this provision should be amended to take into account average annual payments under a contract, rather than payments in any one year, and that the provision should apply based on all the outstanding bonds for the facility. Other commentators stated that the exception should be eliminated as inconsistent with a competitive electric industry.

The revised regulations provide that output contracts are not taken into account under the private business tests if the average annual payments under the contract that are substantially certain to be made do not exceed 0.5 percent of the average annual debt service on all outstanding tax-exempt bonds issued to finance the facility.

8. Exception for Short-Term Sales of Output

The 1998 temporary regulations provide that the exceptions for short-term use that apply to other types of arrangements under the general private activity bond rules in § 1.141–3 also apply to output contracts. Many commentators suggested that these exceptions may have limited practical application in the output context and recommended that they be expanded to permit contracts of a longer duration. These commentators stated that longer-term contracts are required in order to transfer substantial benefits of ownership and substantial burdens of debt service with respect to an output facility. Other commentators suggested that any sale of output by a municipal utility outside of its traditional service territory should result in private business use.

The revised regulations provide an exception under which an output contract with a nongovernmental person will not be taken into account under the private business tests if: (1) the term of the contract, including all renewal options, does not exceed one year; (2) the compensation under the contract is based on generally applicable and uniformly applied rates or represents a negotiated, fair market price; and (3) the facility is not financed for a principal purpose of serving that nongovernmental person.

9. Special Exception for Sales of Output Attributable to Excess Generating Capacity Resulting From Open Access

The 1998 temporary regulations contain an exception to private business use for certain output contracts if: (1) The contract term does not exceed three years; (2) the issuer does not utilize tax-exempt financing to increase the generating capacity of its system during the contract term; (3) the governmental owner offers non-discriminatory, open access transmission tariffs under certain rules of the Federal Energy Regulatory Commission (FERC) (or comparable provisions of state law pursuant to a plan approved by the FERC); (4) all of the output sold is attributable to excess capacity resulting from the offer of the open access tariffs; (5) the contract mitigates stranded costs attributable to the open access tariffs; and (6) any stranded costs recovered by the governmental owner are applied as promptly as is reasonably practical to redeem tax-exempt bonds in a manner consistent with § 1.141–12.

Comments were received regarding many of the above requirements. In particular, many commentators

suggested that the maximum contract term should be extended beyond three years. Some commentators recommended eliminating the prohibition on tax-exempt financing to increase capacity during the contract term. Others suggested that de minimis capacity increases should be permitted. Some commentators suggested that the requirement that a contract mitigate stranded costs should be eliminated because the purpose of that provision is accomplished by the requirement that all of the output sold be attributable to excess capacity from open access tariffs. Some commentators recommended deleting the reference to FERC approval of state open access plans because the FERC may not approve all such plans. Other commentators requested clarification regarding the amounts that an issuer must use to redeem bonds. Finally, some commentators recommended deleting the exception entirely.

The revised regulations retain the exception, with certain modifications. First, the revised exception permits tax-exempt financing during the contract term for property that does not increase the generating capacity of the issuer's system by more than three percent. Second, the amended exception deletes the reference to FERC approval of state open access plans. Third, the revised regulations remove the reference to stranded costs. Finally, the revised exception clarifies that the amounts that an issuer must use to redeem bonds consist of all payments that it receives under the contract, other than the portion of such payments that is properly allocable to the payment of ordinary and necessary expenses directly attributable to the operation and maintenance of the facility (as described in § 1.141–4(c)(2)(C)).

10. Special Exceptions for Transmission Facilities

The 1998 temporary regulations do not treat all use of transmission facilities pursuant to standard tariffs as general public use, but contain certain special exceptions to private business use of transmission facilities. Some commentators suggested that use of transmission facilities under standard tariffs should be treated as general public use, and therefore should never result in private business use. The revised regulations do not treat all use of transmission facilities pursuant to standard tariffs as general public use, but retain and modify the special exceptions, as discussed below.

The 1998 temporary regulations contain two special exceptions under which certain actions with respect to transmission facilities financed by an issue are not treated as deliberate actions under § 1.141–2(d). The first exception provides that the execution of a contract for the use of transmission facilities is not treated as a deliberate action if the contract is entered into in response to or in anticipation of a specific order by the FERC to wheel power under sections 211 and 212 of the Federal Power Act (16 U.S.C. 824j and 824k) (or a state regulatory authority under comparable provisions of state law pursuant to a plan approved by the FERC); the terms of the contract are bona fide and arm's-length; and the consideration paid is consistent with section 212(a) of the Federal Power Act.

Commentators suggested eliminating the requirement that orders of state regulatory authorities be undertaken pursuant to a FERC-approved state open access plan because FERC approval may not be required for all such plans. The revised regulations adopt this suggested change.

The second exception in the 1998 temporary regulations provides that an action is not treated as a deliberate action if it is taken to implement the offering of non-discriminatory, open access tariffs for the use of financed transmission facilities in a manner consistent with FERC rules, including the reciprocity conditions of FERC Order No. 888 (61 FR 21540, May 10, 1996). The exception also applies to orders and rules of state regulatory authorities pursuant to a plan approved by the FERC that are comparable to certain FERC orders and rules. The exception does not apply, however, to the sale, exchange, or other disposition of bond-financed transmission facilities to a nongovernmental person.

Commentators recommended that the exception be expanded to apply to open access tariffs that are offered under state law provisions that are comparable to FERC rules, regardless of whether those provisions are promulgated by a state regulatory authority or approved by the FERC. The revised regulations adopt this suggested change.

Commentators also requested clarification regarding the circumstances in which an independent system operator (ISO) may be treated as a private business user of transmission facilities. Some commentators suggested that the operation of transmission facilities by an ISO is a quasi-governmental function and thus should never constitute private business use. Some commentators requested clarification of whether the existing rules for management contracts under section 141 may be applied to arrangements for the operation of transmission facilities by an ISO.

The revised regulations do not provide that the operation of bond-financed transmission facilities by an ISO or other regional transmission organization (RTO) is disregarded under section 141. However, the existing rules for management contracts under section 141, including Revenue Procedure 97–13 (1997–1 C.B. 632), are applicable in determining whether an arrangement for the operation of transmission facilities by an ISO or other RTO results in private business use, including a determination of whether the arrangement is properly characterized as a lease for federal income tax purposes. Comments are requested on whether additional guidance is needed concerning the treatment under section 141 of arrangements for the operation of bond-financed transmission facilities by an ISO or other RTO.

The 1998 temporary regulations provide a special transition rule for bonds (other than advance refunding bonds) that refund bonds issued prior to July 9, 1996 (the effective date of FERC Order No. 888). Under this rule, an action taken or to be taken with respect to transmission facilities is not taken into account under the reasonable expectations test of § 1.141–2(d) if the action is described in one of the two special exceptions discussed above and the weighted average maturity of the refunding bonds does not exceed the remaining weighted average maturity of the prior bonds.

Commentators recommended that the July 9, 1996 date be changed to a date on or after February 23, 1998 (the effective date of the 1998 temporary regulations). The revised regulations change the cut-off date to February 23, 1998.

Under the 1998 temporary regulations, issuers may apply the special exceptions for transmission facilities to any bonds issued before the effective date of those regulations. However, issuers may not apply the exceptions to refunding bonds issued on or after the effective date, unless the refunding bonds are subject to the 1998 temporary regulations in their entirety. Commentators suggested that, in order to encourage open access, issuers should be permitted to apply the exceptions to refunding bonds that are not otherwise subject to the regulations. The revised regulations adopt this change.

11. Definition of Transmission Facilities

The 1998 temporary regulations define transmission facilities to include facilities that are necessary to provide

ancillary services required to be offered as part of open access transmission tariffs under FERC rules. Commentators stated that the inclusion of ancillary services within the general definition of transmission facilities creates unwarranted complexity. They recommended that facilities used for ancillary services be treated as transmission facilities only for purposes of the special exceptions for transmission facilities in the regulations. The revised regulations adopt this approach.

B. Section 1.141–8T $15 Million Limitation for Output Facilities

Under the 1998 temporary regulations, property that replaces existing property is treated as part of the same project as the replaced property unless, among other things, the bonds that finance the replaced property have a weighted average maturity that is not greater than 120 percent of the reasonably expected economic life of the replaced property.

One commentator noted that it is not common to allocate bonds that finance output facilities to the specific assets that comprise those facilities, and thus it may be difficult to determine whether this 120 percent requirement is met. The revised regulations amend this rule so that it applies to the entire output facility of which the replaced property is a part, rather than the specific asset being replaced.

C. Need for Temporary Regulations and Request for Public Comments

Congress passed the Energy Policy Act of 1992 to encourage restructuring of the electric power industry. Since that time, the FERC and many states have adopted policies to open up access to transmission facilities. Treasury and the IRS are aware that these initiatives are causing rapid changes in the electric power industry.

The 1998 temporary regulations were published in order to provide immediate guidance under section 141 regarding the effect on the tax-exempt status of bonds of certain restructuring transactions necessary for utilities to participate in a restructured electric utility industry. Treasury and the IRS are aware, however, that restructuring efforts are evolving and uncertain, and that new types of arrangements may be developed to implement restructuring.

Accordingly, the revised regulations are published in both temporary and proposed form in order to continue to provide guidance on which issuers can rely in evaluating their participation in open access regimes, while providing the opportunity for public comment with respect to developments in the electric power industry that have occurred since the publication of the 1998 temporary regulations. The revised regulations are published in temporary form with the expectation that the Treasury and the IRS will reexamine them in light of new developments within the next three years.

Comments are invited on whether further guidance is needed to address the new types of contractual arrangements that are arising in the electric power industry. In particular, comments are invited on whether additional guidance is needed to address the proper treatment under section 141 of output contracts for the use of transmission and distribution facilities under open access, and output contracts for ancillary services that are necessary to maintain the reliability of a transmission grid. Comments are also requested on the impact of FERC Order No. 2000 (65 FR 810, January 6, 2000) on tax-exempt bonds issued by public power systems, including whether additional guidance is needed regarding the proper treatment under section 141 of arrangements for the operation of bond-financed transmission facilities by an ISO or other RTO that satisfies the requirements of Order 2000.

Effective Dates

Sections 1.141–7T and 1.141–8T are applicable to bonds sold on or after January 19, 2001. Section 1.142(f)(4)–1 applies to elections made on or after January 19, 2001. Section 1.150–5 applies to notices and elections filed on or after January 19, 2001.

Special Analyses

It has been determined that this Treasury decision is not a significant regulatory action as defined in Executive Order 12866. Therefore, a regulatory assessment is not required. It has also been determined that section 553(b) of the Administrative Procedure Act (5 U.S.C. chapter 5) does not apply to these regulations.

It is hereby certified that the collection of information in these regulations will not have a significant impact on a substantial number of small entities. This certification is based upon the fact that in the years 1987 through 1997 a total of only 80 different state or local government issuers of exempt facility bonds issued under section 142(f) for facilities for the local furnishing of electric energy or gas filed information returns with the IRS under section 149(e). Further, an election under section 142(f)(4) is in no event required to be filed with the Internal Revenue Service more than once. Therefore, a Regulatory Flexibility Analysis under the Regulatory Flexibility Act (5 U.S.C. chapter 6) is not required. Pursuant to section 7805(f) of the Internal Revenue Code, these temporary regulations will be submitted to the Chief Counsel for Advocacy of the Small Business Administration for comment on its impact on small business.

Drafting Information

The principal authors of these regulations are Bruce M. Serchuk, and Rose M. Weber, Office of Chief Counsel (Tax-exempt and Government Entities), Internal Revenue Service, and Stephen J. Watson, Office of Tax Legislative Counsel, Department of the Treasury. However, other personnel from the IRS and Treasury Department participated in their development.

List of Subjects

26 CFR Part 1

Income taxes, Reporting and recordkeeping requirements.

26 CFR Part 602

Reporting and recordkeeping requirements.

Adoption of Amendments to the Regulations

Accordingly, 26 CFR part 1 is amended as follows:

PART 1—INCOME TAXES

Paragraph 1. The authority citation for part 1 continues to read in part as follows:

Authority: 26 U.S.C. 7805 * * *

Par. 2. Section 1.141–0 is amended by revising the entire entries for §§ 1.141–7T, 1.141–8T and 1.141–15T to read as follows:

§ 1.141–0 Table of contents.

* * * * *

§ 1.141–7T Special Rules for Output Facilities (Temporary).

(a) Overview.
(b) Definitions.
(1) Available output.
(2) Measurement period.
(3) Sale at wholesale.
(4) Take contract and take or pay contract.
(5) Transmission facilities.
(6) Nonqualified amount.
(c) Output contracts.
(1) General rule.
(2) Benefits and burdens test.
(3) Take contract or take or pay contract.
(4) Requirements contracts.
(5) Output contract properly characterized as a lease.
(d) Measurement of private business use.
(e) Measurement of private security or payment.

(f) Exceptions for certain contracts.
(1) Small purchases of output.
(2) Swapping and pooling arrangements.
(3) Short-term output contracts.
(4) Special 3-year exception for sales of output attributable to excess generating capacity resulting from participation in open access.
(5) Special exceptions for transmission facilities.
(6) Certain conduit parties disregarded.
(g) Allocations of output facilities and systems.
(1) Facts and circumstances analysis.
(2) Illustrations.
(3) Transmission contracts.
(4) Allocation of payments.
(h) Examples.

§ 1.141–8T $15 Million Limitation for Output Facilities (Temporary).

(a) In general.
(1) General rule.
(2) Reduction in $15 million output limitation for outstanding issues.
(3) Benefits and burdens test applicable.
(b) Definition of project.
(1) General rule.
(2) Separate ownership.
(3) Generating property.
(4) Transmission.
(5) Subsequent improvements.
(6) Replacement property.
(c) Examples.

* * * * *

§ 1.141–15T Effective Dates (Temporary).

(a) through (e) [Reserved].
(f) Effective dates for certain regulations relating to output facilities.
(1) General rule.
(2) Transition rule for requirement contracts.
(3) Elective application of 1998 temporary regulations.
(g) Refunding bonds.
(h) Permissive retroactive application.
(i) Permissive retroactive application of certain regulations pertaining to output contracts.

* * * * *

Par. 3. Section 1.141–7T is revised to read as follows:

§ 1.141–7T Special Rules for Output Facilities (Temporary).

(a) *Overview.* This section provides special rules to determine whether arrangements for the purchase of output from an output facility cause an issue of bonds to meet the private business tests. For this purpose, unless otherwise stated, water facilities are treated as output facilities. Sections 1.141–3 and 1.141–4 generally apply to determine whether other types of arrangements for use of an output facility cause an issue to meet the private business tests.

(b) *Definitions.* For purposes of this section and § 1.141–8T, the following definitions and rules apply:

(1) *Available output.* The available output of a facility financed by an issue is determined by multiplying the number of units produced or to be produced by the facility in one year by the number of years in the measurement period of that facility for that issue.

(i) *Generating facilities.* The number of units produced or to be produced by a generating facility in one year is determined by reference to its nameplate capacity or the equivalent (or where there is no nameplate capacity or the equivalent, its maximum capacity), which is not reduced for reserves, maintenance or other unutilized capacity.

(ii) *Transmission and other output facilities*—(A) *In general.* For transmission, cogeneration, and other output facilities, available output must be measured in a reasonable manner to reflect capacity.

(B) *Electric transmission facilities.* Measurement of the available output of all or a portion of electric transmission facilities may be determined in a manner consistent with the reporting rules and requirements for transmission networks promulgated by the Federal Energy Regulatory Commission (FERC). For example, for a transmission network, the use of aggregate load and load share ratios in a manner consistent with the requirements of the FERC may be reasonable. In addition, depending on the facts and circumstances, measurement of the available output of transmission facilities using thermal capacity or transfer capacity may be reasonable.

(iii) *Special rule for facilities with significant unutilized capacity.* If an issuer reasonably expects on the issue date that persons that are treated as private business users will purchase more than 20 percent of the actual output of the facility financed with the issue, the Commissioner may determine the number of units produced or to be produced by the facility in one year on a reasonable basis other than by reference to nameplate capacity, such as the average expected annual output of the facility. For example, the Commissioner may determine the available output of a financed peaking electric generating unit by reference to the reasonably expected annual output of that unit if the issuer reasonably expects, on the issue date of bonds that finance the unit, that an investor-owned utility will purchase more than 20 percent of the actual output of the facility during the measurement period under a take or pay contract, even if the amount of output purchased is less than 10 percent of the available output determined by reference to nameplate capacity. The reasonably expected annual output of the generating facility must be consistent with the capacity reported for prudent reliability purposes.

(iv) *Special rule for facilities with a limited source of supply.* If a limited source of supply constrains the output of an output facility, the number of units produced or to be produced by the facility must be determined by reasonably taking into account those constraints. For this purpose, a limited source of supply shall include a physical limitation (for example, flow of water), but not an economic limitation (for example, cost of coal or gas). For example, the available output of a hydroelectric unit must be determined by reference to the reasonably expected annual flow of water through the unit.

(2) *Measurement period.* The measurement period of an output facility financed by an issue is determined under § 1.141–3(g).

(3) *Sale at wholesale.* For purposes of this section, a sale at wholesale means a sale of output to any person for resale.

(4) *Take contract and take or pay contract.* A *take contract* is an output contract under which a purchaser agrees to pay for the output under the contract if the output facility is capable of providing the output. A *take or pay contract* is an output contract under which a purchaser agrees to pay for the output under the contract, whether or not the output facility is capable of providing the output.

(5) *Transmission facilities*—(i) *In general. Transmission facilities* are facilities for the transmission or distribution of output.

(ii) *Special rule for ancillary services.* For purposes of paragraph (f)(5), transmission facilities include facilities necessary to provide ancillary services required to be offered as part of open access transmission tariffs under rules promulgated by the FERC under sections 205 and 206 of the Federal Power Act (16 U.S.C. 824d and 824e). Thus, if a facility also serves another function (for example, a facility that provides for operating reserves for transmission and also provides generation) an allocable portion of the facility is treated as a transmission facility for purposes of paragraph (f)(5) of this section.

(6) *Nonqualified amount.* The nonqualified amount with respect to an issue is determined under section 141(b)(8).

(c) *Output contracts*—(1) *General rule.* The purchase by a nongovernmental person of available output of an output facility (output contract) financed with the proceeds of an issue is taken into account under the private business tests if the purchase has the effect of transferring substantial benefits of owning the facility and substantial burdens of paying the debt service on

bonds used (directly or indirectly) to finance the facility (the benefits and burdens test). See paragraph (c)(5) of this section for the treatment of an output contract that is properly characterized as a lease for Federal income tax purposes. See paragraphs (d) and (e) of this section for rules regarding measuring the use of, and payments of debt service for, an output facility for determining whether the private business tests are met. See also § 1.141–8T for rules for when an issue that finances an output facility (other than a water facility) meets the private business tests because the nonqualified amount of the issue exceeds $15 million.

(2) *Benefits and burdens test*—(i) *Benefits of ownership.* An output contract transfers substantial benefits of owning a facility if the contract gives the purchaser (directly or indirectly) rights to capacity of the facility on a basis that is preferential to the rights of the general public.

(ii) *Burdens of paying debt service.* An output contract transfers substantial burdens of paying debt service on an issue to the extent that the issuer reasonably expects that it is substantially certain that payments will be made under the terms of the contract (disregarding default, insolvency, or other similar circumstances). For example, an output contract is treated as transferring burdens of paying debt service on an issue if payments must be made upon contract termination.

(iii) *Payments pursuant to pledged contract.* Payments made or to be made under the terms of an output contract that is pledged as security for an issue are taken into account under the private business tests even if the issuer reasonably expects that it is not substantially certain that payments will be made under the contract (disregarding default, insolvency, or other similar circumstances). For this purpose, an output contract is pledged as security only if the bond documents provide that the pledged contract cannot be substantially amended without the consent of bondholders or a trustee for the bondholders. This paragraph (c)(2)(iii) applies to pledges made on or after February 23, 1998, with respect to bonds that are subject to this section.

(3) *Take contract or take or pay contract.* The benefits and burdens test is met if a nongovernmental person agrees pursuant to a take contract or a take or pay contract to purchase available output of a facility.

(4) *Requirements contracts*—(i) *In general.* A requirements contract under which a nongovernmental person agrees to purchase all or part of its output requirements is taken into account under the private business tests only to the extent that, based on all the facts and circumstances, the contract meets the benefits and burdens test. See § 1.141–15T(f)(2) for special effective dates for the application of this paragraph (c)(4) to issues financing facilities subject to requirements contracts.

(ii) *Significant factors.* Significant factors that tend to establish that the benefits and burdens test is met under the rule set forth in paragraph (c)(4)(i) of this section include, but are not limited to—

(A) The purchaser's customer base has significant indicators of stability, such as large size, diverse composition, and a substantial residential component;

(B) The contract covers historical requirements of the purchaser, rather than only projected requirements that are in addition to historical requirements; and

(C) The purchaser agrees not to construct or acquire other power resources to meet the requirements covered by the contract.

(iii) *Special rule for retail requirements contracts.* In general, a requirements contract that is not a sale at wholesale (a *retail requirements contract*) does not meet the benefits and burdens test because the obligation to make payments on the contract is contingent on the output requirements of a single user. Such a requirements contract in general meets the benefits and burdens test, however, to the extent that it contains contractual terms that obligate the purchaser to make payments that are not contingent on the output requirements of the purchaser or that obligate the purchaser to have output requirements. For example, a requirements contract with an industrial purchaser meets the benefits and burdens test if the purchaser enters into additional contractual obligations with the issuer or another governmental unit not to cease operations. A retail requirements contract does not meet the benefits and burdens test by reason of a provision that requires the purchaser to pay reasonable and customary damages (including liquidated damages) in the event of a default, or a provision that permits the purchaser to pay a specified amount to terminate the contract while the purchaser has requirements, in each case if the amount of the payment is reasonably related to the purchaser's obligation to buy requirements that is discharged by the payment.

(5) *Output contract properly characterized as a lease.* Notwithstanding any other provision of this section, an output contract that is properly characterized as a lease for Federal income tax purposes shall be tested under the rules contained in §§ 1.141–3 and 1.141–4 to determine whether it is taken into account under the private business tests.

(d) *Measurement of private business use.* If an output contract results in private business use under this section, the amount of private business use generally is the amount of output purchased under the contract.

(e) *Measurement of private security or payment.* The measurement of payments made or to be made by nongovernmental persons under output contracts as a percent of the debt service of an issue is determined under the rules provided in § 1.141–4.

(f) *Exceptions for certain contracts*—(1) *Small purchases of output.* An output contract is not taken into account under the private business tests if the average annual payments under the contract that are substantially certain to be made under paragraph (c)(2)(ii) of this section do not exceed 0.5 percent of the average annual debt service on all outstanding tax-exempt bonds issued to finance the facility, determined as of the effective date of the contract.

(2) *Swapping and pooling arrangements.* An agreement that provides for swapping or pooling of output by one or more governmental persons and one or more nongovernmental persons does not result in private business use of the output facility owned by the governmental person to the extent that—

(i) The swapped output is reasonably expected to be approximately equal in value (determined over periods of one year or less); and

(ii) The purpose of the agreement is to enable each of the parties to satisfy different peak load demands, to accommodate temporary outages, to diversify supply, or to enhance reliability in accordance with prudent reliability standards.

(3) *Short-term output contracts.* An output contract with a nongovernmental person is not taken into account under the private business tests if—

(i) The term of the contract, including all renewal options, is not longer than 1 year;

(ii) The contract either is a negotiated, arm's-length arrangement that provides for compensation at fair market value, or is based on generally applicable and uniformly applied rates; and

(iii) The output facility is not financed for a principal purpose of providing that facility for use by that nongovernmental person.

(4) *Special 3-year exception for sales of output attributable to excess generating capacity resulting from participation in open access.* The purchase of output of an electric generating facility by a nongovernmental person is not treated as private business use if all of the following requirements are met:

(i) The term of the contract is not longer than 3 years, including all renewal options.

(ii) The issuer does not make expenditures to increase the generating capacity of its system during the term of the contract that are, or will be, financed with proceeds of tax-exempt bonds (other than expenditures for property that does not increase the generating capacity of the system by more than 3 percent).

(iii) The governmental owner offers non-discriminatory, open access transmission tariffs for use of its transmission system pursuant to rules promulgated by the FERC under sections 205 and 206 of the Federal Power Act (16 U.S.C. 824d and 824e) (or comparable provisions of state law).

(iv) All of the output sold under the contract is attributable to excess capacity resulting from the offer of the non-discriminatory, open access transmission tariffs referred to in paragraph (f)(5)(iii) of this section.

(v) All payments received by the governmental owner under the contract (other than the portion of such payments described in § 1.141–4(c)(2)(C)) are applied as promptly as is reasonably practical to redeem tax-exempt bonds that financed the output facility in a manner consistent with § 1.141–12.

(5) *Special exceptions for transmission facilities*—(i) *Mandated wheeling.* Entering into a contract for the use of transmission facilities financed by an issue is not treated as a deliberate action under § 1.141–2(d) if—

(A) The contract is entered into in response to (or in anticipation of) an order by the United States under sections 211 and 212 of the Federal Power Act (16 U.S.C. 824j and 824k) (or a state regulatory authority under comparable provisions of state law); and

(B) The terms of the contract are bona fide and arm's length, and the consideration paid is consistent with the provisions of section 212(a) of the Federal Power Act.

(ii) *Actions taken to implement non-discriminatory, open access.* An action is not treated as a deliberate action under § 1.141–2(d) if it is taken to implement the offering of non-discriminatory, open access tariffs for the use of transmission facilities financed by an issue in a manner consistent with rules promulgated by the FERC under sections 205 and 206 of the Federal Power Act (16 U.S.C. 824d and 824e) (or comparable provisions of state law). This paragraph (f)(5)(ii) does not apply, however, to the sale, exchange, or other disposition of transmission facilities to a nongovernmental person.

(iii) *Application of reasonable expectations test to certain current refunding bonds.* An action taken or to be taken with respect to transmission facilities refinanced by an issue is not taken into account under the reasonable expectations test of § 1.141–2(d) if—

(A) The action is described in paragraph (f)(5)(i) or (ii) of this section;

(B) The bonds of the issue are current refunding bonds that, directly or indirectly, refund bonds originally issued before February 23, 1998; and

(C) The weighted average maturity of the refunding bonds is not greater than the remaining weighted average maturity of those prior bonds.

(6) *Certain conduit parties disregarded.* A nongovernmental person acting solely as a conduit for the exchange of output among governmentally owned and operated utilities is disregarded in determining whether the private business tests are met with respect to financed facilities owned by a governmental person. Use of property by a power marketer in the trade or business of purchasing and reselling power, however, is taken into account under the private business tests.

(g) *Allocations of output facilities and systems*—(1) *Facts and circumstances analysis.* Whether output sold under an output contract is allocated to a particular facility (for example, a generating unit), to the entire system of the seller of that output (net of any uses of that system output allocated to a particular facility), or to a portion of a facility is based on all the facts and circumstances. Significant factors to be considered in determining the allocation of an output contract to financed property are the following:

(i) The extent to which it is physically possible to deliver output to or from a particular facility or system.

(ii) The terms of a contract relating to the delivery of output (such as delivery limitations and options or obligations to deliver power from additional sources).

(iii) Whether a contract is entered into as part of a common plan of financing for a facility.

(iv) The method of pricing output under the contract, such as the use of market rates rather than rates designed to pay debt service of tax-exempt bonds used to finance a particular facility.

(2) *Illustrations.* The following illustrate the factors set forth in paragraph (g)(1) of this section:

(i) *Physical possibility.* Output from a generating unit that is fed directly into a low voltage distribution system of the owner of that unit and that cannot physically leave that distribution system generally must be allocated to those receiving electricity through that distribution system. Output may be allocated without regard to physical limitations, however, if exchange or similar agreements provide output to a purchaser where, but for the exchange agreements, it would not be possible for the seller to provide output to that purchaser.

(ii) *Contract terms relating to performance.* A contract to provide a specified amount of electricity from a system, but only when at least that amount of electricity is being generated by a particular unit, is allocated to that unit. For example, a contract to buy 20 MW of system power with a right to take up to 40 percent of the actual output of a specific 50 MW facility whenever total system output is insufficient to meet all of the seller's obligations generally is allocated to the specific facility rather than to the system.

(iii) *Common plan of financing.* A contract entered into as part of a common plan of financing for a facility generally is allocated to the facility if debt service for the issue of bonds is reasonably expected to be paid, directly or indirectly, from payments substantially certain to be made under the contract (disregarding default, insolvency, or other similar circumstances).

(iv) *Pricing method.* Pricing based on the capital and generating costs of a particular turbine tends to indicate that output under the contract is properly allocated to that turbine.

(3) *Transmission contracts.* Whether use under an output contract for transmission is allocated to a particular facility or to a transmission network is based on all the facts and circumstances, in a manner similar to paragraphs (g)(1) and (2) of this section. In general, the method used to determine payments under a contract is a more significant contract term for this purpose than nominal contract path. In general, if reasonable and consistently applied, the determination of use of transmission facilities under an output contract may be based on a method used by third parties, such as reliability councils.

(4) *Allocation of payments.* Payments for output provided by an output facility financed with two or more sources of

funding are generally allocated under the rules in § 1.141–4(c).

(h) *Examples.* The following examples illustrate the application of this section:

Example 1. Joint ownership. Z, an investor-owned electric utility, and City H agree to construct an electric generating facility of a size sufficient to take advantage of the economies of scale. H will issue $50 million of its 24-year bonds, and Z will use $100 million of its funds for construction of a facility they will jointly own as tenants in common. Each of the participants will share in the ownership, output, and operating expenses of the facility in proportion to its contribution to the cost of the facility, that is, one-third by H and two-thirds by Z. H's bonds will be secured by H's ownership interest in the facility and by revenues to be derived from its share of the annual output of the facility. H will need only 50 percent of its share of the annual output of the facility during the first 20 years of operations. It agrees to sell 10 percent of its share of the annual output to Z for a period of 20 years pursuant to a contract under which Z agrees to take that power if available. The facility will begin operation, and Z will begin to receive power, 4 years after the H bonds are issued. The measurement period for the property financed by the issue is 20 years. H also will sell the remaining 40 percent of its share of the annual output to numerous other private utilities under contracts of one year or less that satisfy the exception under paragraph (f)(3) of this section. No other contracts will be executed obligating any person to purchase any specified amount of the power for any specified period of time. No person (other than Z) will make payments substantially certain to be made (disregarding default, insolvency, or other similar circumstances) under paragraph (c)(2) of this section that will result in a transfer of substantial burdens of paying debt service on bonds used directly or indirectly to provide H's share of the facilities. The bonds are not private activity bonds, because H's one-third interest in the facility is not treated as used by the other owners of the facility. Although 10 percent of H's share of the annual output of the facility will be used in the trade or business of Z, a nongovernmental person, under this section, that portion constitutes not more than 10 percent of the available output of H's ownership interest in the facility.

Example 2. Requirements contract treated as take contract. (i) City J issues 20-year bonds to acquire an electric generating facility having a reasonably expected economic life substantially greater than 20 years and a nameplate capacity of 100 MW. The available output of the facility under paragraph (b)(1) of this section is approximately 17,520,000 MWh (100 MW × 24 hours × 365 days × 20 years). On the issue date, J enters into a contract with T, an investor-owned utility, to provide T with all of its power requirements for a period of 10 years, commencing on the issue date. J reasonably expects that T will actually purchase an average of 30 MW over the 10-year period. Based on all of the facts and circumstances, including the size, diversity, and composition of T's customer base, J reasonably expects that it is substantially certain (disregarding default, insolvency, or other similar circumstances) that T will actually purchase only an average of 26 MW over the 10-year period. The contract is a requirements contract that must be taken into account under the private business tests pursuant to paragraph (c)(4) of this section because it provides T with substantial benefits of ownership (rights to capacity) and obligates T with substantial burdens of making payments that the issuer reasonably expects are substantially certain.

(ii) Under paragraph (d) of this section, the amount of reasonably expected private business use under this contract is approximately 15 percent (30 MW × 24 hours × 365 days × 10 years, or 2,628,000 MWh) of the available output. Accordingly, the issue meets the private business use test. J reasonably expects that the amount to be paid for an average of 26 MW of power (less the operation and maintenance costs directly attributable to generating that 26 MW of power), will be more than 10 percent of debt service on the issue on a present-value basis. The payment for 26 MW of power is an amount that J reasonably expects is substantially certain to be made under paragraph (c)(2) of this section. Accordingly, the issue meets the private security or payment test because J reasonably expects that it is substantially certain that payment of more than 10 percent of the debt service will be indirectly derived from payments by T. The bonds are private activity bonds under paragraph (c) of this section. Further, if 15 percent of the sale proceeds of the issue is greater than $15 million and the issue meets the private security or payment test with respect to the $15 million output limitation, the bonds are also private activity bonds under section 141(b)(4). See § 1.141–8T.

Example 3. Allocation of existing contracts to new facilities. Power Authority K, a political subdivision created by the legislature in State × to own and operate certain power generating facilities, sells all of the power from its existing facilities to four private utility systems under contracts executed in 1999, under which the four systems are required to take or pay for specified portions of the total power output until the year 2029. Existing facilities supply all of the present needs of the four utility systems, but their future power requirements are expected to increase substantially beyond the capacity of K's current generating system. K issues 20-year bonds in 2004 to construct a large generating facility. As part of the financing plan for the bonds, a fifth private utility system contracts with K to take or pay for 15 percent of the available output of the new facility. The balance of the output of the new facility will be available for sale as required, but initially it is not anticipated that there will be any need for that power. The revenues from the contract with the fifth private utility system will be sufficient to pay less than 10 percent of the debt service on the bonds (determined on a present value basis). The balance, which will exceed 10 percent of the debt service on the bonds, will be paid from revenues derived from the contracts with the four systems initially from sale of power produced by the old facilities. The output contracts with all the private utilities are allocated to K's entire generating system. See paragraphs (g)(1) and (2) of this section. Thus, the bonds meet the private business use test because more than 10 percent of the proceeds will be used in the trade or business of a nongovernmental person. In addition, the bonds meet the private security or payment test because payment of more than 10 percent of the debt service, pursuant to underlying arrangements, will be derived from payments in respect of property used for a private business use.

Example 4. Allocation to displaced resource. Municipal utility MU, a political subdivision, purchases all of the electricity required to meet the needs of its customers (1,000 MW) from B, an investor-owned utility that operates its own electric generating facilities, under a 50-year take or pay contract. MU does not anticipate that it will require additional electric resources, and any new resources would produce electricity at a higher cost to MU than its cost under its contract with B. Nevertheless, B encourages MU to construct a new generating plant sufficient to meet MU's requirements. MU issues obligations to construct facilities that will produce 1,000 MW of electricity. MU, B, and I, another investor-owned utility, enter into an agreement under which MU assigns to I its rights under MU's take or pay contract with B. Under this arrangement, I will pay MU, and MU will continue to pay B, for the 1,000 MW. I's payments to MU will at least equal the amounts required to pay debt service on MU's bonds. In addition, under paragraph (g)(1)(iii) of this section, the contract among MU, B, and I is entered into as part of a common plan of financing of the MU facilities. Under all the facts and circumstances, MU's assignment to I of its rights under the original take or pay contract is allocable to MU's new facilities under paragraph (g) of this section. Because I is a nongovernmental person, MU's bonds are private activity bonds.

Example 5. Transmission facilities transferred to regional transmission organization. (i) In 2001, the public utilities commission of State C adopts a plan for restructuring its electric power industry. The plan fosters competition by providing both wholesale and retail customers with non-discriminatory access to transmission facilities within the State. The plan provides that investor-owned utilities will transfer operating control over all of their transmission assets to a regional transmission organization (RTO), which is a nongovernmental person that will operate those combined assets as a single, state-wide system. Municipally-owned utilities are eligible for, but are not required to participate in, the open access system implemented by the RTO. The functions of the RTO include control of transmission access and pricing, scheduling transmission, control area operations, and settlements and billing. The RTO's compensation under its operating agreement with transmission owners is based on a share of net profits from operating the facilities. The restructuring plan is approved by the FERC pursuant to sections 205 and 206 of the Federal Power Act.

(ii) In 1994, City D had issued bonds to finance improvements to its transmission system. In 2001, D transfers operating control of its transmission system to the RTO pursuant to the restructuring plan. At the same time, D chooses to apply the private activity bond regulations of §§ 1.141–1 through 1.141–15 to the 1994 bonds. The operation of the financed facilities by the RTO results in private business use under § 1.141–3. Under the special exception in paragraph (f)(5) of this section, however, the transfer of control is not treated as a deliberate action. Accordingly, the transfer of control does not cause the 1994 bonds to meet the private activity bond tests.

Example 6. Current refunding. The facts are the same as in Example 5 of this paragraph (h), and in addition D issues bonds in 2003 to currently refund the 1994 bonds. The weighted average maturity of the 2003 bonds is not greater than the remaining weighted average maturity of the 1994 bonds. D chooses to apply the private activity bond regulations of §§ 1.141–1 through 1.141–15 to the refunding bonds. In general, reasonable expectations must be separately tested on the date that refunding bonds are issued under § 1.141–2(d). Under the special exception in paragraph (f)(5) of this section, however, the transfer of the financed facilities to the RTO need not be taken into account in applying the reasonable expectations test to the refunding bonds.

Par. 4. Section 1.141–8T is revised to read as follows:

§ 1.141–8T $15 million limitation for output facilities (temporary).

(a) *In general*—(1) *General rule.* Section 141(b)(4) provides a special private activity bond limitation (the $15 million output limitation) for issues 5 percent or more of the proceeds of which are to be used to finance output facilities (other than a facility for the furnishing of water). Under this rule, an issue consists of private activity bonds under the private business tests of section 141(b)(1) and (2) if the nonqualified amount with respect to output facilities financed by the proceeds of the issue exceeds $15 million. The $15 million output limitation applies in addition to the private business tests of section 141(b)(1) and (2). Under section 141(b)(4) and paragraph (a)(2) of this section, the $15 million output limitation is reduced in certain cases. Specifically, an issue meets the test in section 141(b)(4) if both of the following tests are met:

(i) More than $15 million of the proceeds of the issue to be used with respect to an output facility are to be used for a private business use. Investment proceeds are disregarded for this purpose if they are not allocated disproportionately to the private business use portion of the issue.

(ii) The payment of the principal of, or the interest on, more than $15 million of the sales proceeds of the portion of the issue used with respect to an output facility is (under the terms of the issue or any underlying arrangement) directly or indirectly—

(A) Secured by any interest in an output facility used or to be used for a private business use (or payments in respect of such an output facility); or

(B) To be derived from payments (whether or not to the issuer) in respect of an output facility used or to be used for a private business use.

(2) *Reduction in $15 million output limitation for outstanding issues*—(i) *General rule.* In determining whether an issue 5 percent or more of the proceeds of which are to be used with respect to an output facility consists of private activity bonds under the $15 million output limitation, the $15 million limitation on private business use and private security or payments is applied by taking into account the aggregate nonqualified amounts of any outstanding bonds of other issues 5 percent or more of the proceeds of which are or will be used with respect to that output facility or any other output facility that is part of the same project.

(ii) *Bonds taken into account.* For purposes of this paragraph (a)(2), in applying the $15 million output limitation to an issue (the later issue), a tax-exempt bond of another issue (the earlier issue) is taken into account if—

(A) That bond is outstanding on the issue date of the later issue;

(B) That bond will not be redeemed within 90 days of the issue date of the later issue in connection with the refunding of that bond by the later issue; and

(C) 5 percent or more of the sale proceeds of the earlier issue financed an output facility that is part of the same project as the output facility that is financed by 5 percent or more of the sale proceeds of the later issue.

(3) *Benefits and burdens test applicable*—(i) *In general.* In applying the $15 million output limitation, the benefits and burdens test of § 1.141–7T applies, except that ''$15 million'' is substituted for ''10 percent'', or ''5 percent'' as appropriate.

(ii) *Earlier issues for the project.* If bonds of an earlier issue are outstanding and must be taken into account under paragraph (a)(2) of this section, the nonqualified amount for that earlier issue is multiplied by a fraction, the numerator of which is the adjusted issue price of the earlier issue as of the issue date of the later issue, and the denominator of which is the issue price of the earlier issue. Pre-issuance accrued interest as defined in § 1.148–1(b) is disregarded for this purpose.

(b) *Definition of project*—(1) *General rule.* For purposes of paragraph (a)(2) of this section, *project* has the meaning provided in this paragraph. Facilities that are functionally related and subordinate to a project are treated as part of that same project. Facilities having different purposes or serving different customer bases are not ordinarily part of the same project. For example, the following are generally not part of the same project—

(i) Generation and transmission facilities;

(ii) Separate facilities designed to serve wholesale customers and retail customers; and

(iii) A peaking unit and a baseload unit.

(2) *Separate ownership.* Except as otherwise provided in this paragraph (b)(2), facilities that are not owned by the same person are not part of the same project. If different governmental persons act in concert to finance a project, however (for example as participants in a joint powers authority), their interests are aggregated with respect to that project to determine whether the $15 million output limitation is met. In the case of undivided ownership interests in a single output facility, property that is not owned by different persons is treated as separate projects only if the separate interests are financed—

(i) With bonds of different issuers; and

(ii) Without a principal purpose of avoiding the limitation in this section.

(3) *Generating property*—(i) *Property on same site.* In the case of generation and related facilities, *project* means property located at the same site.

(ii) *Special rule for generating units.* Separate generating units are not part of the same project if one unit is reasonably expected, on the issue date of each issue that finances the units, to be placed in service more than 3 years before the other. Common facilities or property that will be functionally related to more than one generating unit must be allocated on a reasonable basis. If a generating unit already is constructed or is under construction (the first unit) and bonds are to be issued to finance an additional generating unit (the second unit), all costs for any common facilities paid or incurred before the earlier of the issue date of bonds to finance the second unit or the commencement of construction of the second unit are allocated to the first unit. At the time that bonds are issued to finance the second unit (or, if earlier, upon commencement of construction of

that unit), any remaining costs of the common facilities may be allocated between the first and second units so that in the aggregate the allocation is reasonable.

(4) *Transmission.* In the case of transmission facilities, *project* means functionally related or contiguous property. Separate transmission facilities are not part of the same project if one facility is reasonably expected, on the issue date of each issue that finances the facilities, to be placed in service more than 2 years before the other.

(5) *Subsequent improvements*—(i) *In general.* An improvement to generating or transmission facilities that is not part of the original design of those facilities (the original project) is not part of the same project as the original project if the construction, reconstruction, or acquisition of that improvement commences more than 3 years after the original project was placed in service and the bonds issued to finance that improvement are issued more than 3 years after the original project was placed in service.

(ii) *Special rule for transmission facilities.* An improvement to transmission facilities that is not part of the original design of that property is not part of the same project as the original project if the issuer did not reasonably expect the need to make that improvement when it commenced construction of the original project and the construction, reconstruction, or acquisition of that improvement is mandated by the federal government or a state regulatory authority to accommodate requests for wheeling.

(6) *Replacement property.* For purposes of this section, property that replaces existing property of an output facility is treated as part of the same project as the replaced property unless—

(i) The need to replace the property was not reasonably expected on the issue date or the need to replace the property occurred more than 3 years before the issuer reasonably expected (determined on the issue date of the bonds financing the property) that it would need to replace the property; and

(ii) The bonds that finance (and refinance) the output facility have a weighted average maturity that is not greater than 120 percent of the reasonably expected economic life of the facility.

(c) *Example.* The application of the provisions of this section is illustrated by the following example:

Example. (i) Power Authority K, a political subdivision, intends to issue a single issue of tax-exempt bonds at par with a stated principal amount and sale proceeds of $500 million to finance the acquisition of an electric generating facility. No portion of the facility will be used for a private business use, except that L, an investor-owned utility, will purchase 10 percent of the output of the facility under a take contract and will pay 10 percent of the debt service on the bonds. The nonqualified amount with respect to the bonds is $50 million.

(ii) The maximum amount of tax-exempt bonds that may be issued for the acquisition of an interest in the facility in paragraph (i) of this *Example* is $465 million (that is, $450 million for the 90 percent of the facility that is governmentally owned and used plus a nonqualified amount of $15 million).

Par. 5. Section 1.141–15 is amended by revising paragraphs (c), (d) and (e) to read as follows:

§ 1.141–15 Effective dates.

* * * * *

(c) *Refunding bonds.* Sections 1.141–1 through 1.141–6(a), 1.141–9 through 1.141–14, 1.145–1 through 1.145–2, 1.150–1(a)(3) and the definition of bond documents contained in § 1.150–1(b) do not apply to any bonds issued on or after May 16, 1997, to refund a bond to which those sections do not apply unless—

(1) The refunding bonds are subject to section 1301 of the Tax Reform Act of 1986 (100 Stat. 2602); and

(2)(i) The weighted average maturity of the refunding bonds is longer than—

(A) The weighted average maturity of the refunded bonds; or

(B) In the case of a short-term obligation that the issuer reasonably expects to refund with a long-term financing (such as a bond anticipation note), 120 percent of the weighted average reasonably expected economic life of the facilities financed; or

(ii) A principal purpose for the issuance of the refunding bonds is to make one or more new conduit loans.

(d) *Permissive application of regulations.* Except as provided in paragraph (e) of this section, §§ 1.141–1 through 1.141–6(a), 1.141–9 through 1.141–14, 1.145–1 through 1.145–2, 1.150–1(a)(3) and the definition of bond documents contained in § 1.150–1(b) may be applied in whole, but not in part, to actions taken before February 23, 1998, with respect to—

(1) Bonds that are outstanding on May 16, 1997, and subject to section 141; or

(2) Refunding bonds issued on or after May 16, 1997 that are subject to section 141.

(e) *Permissive application of certain sections.* The following sections may each be applied to any bonds—

(1) Section 1.141–3(b)(4);

(2) Section 1.141–3(b)(6); and

(3) Section 1.141–12.

Par. 6. Section 1.141–15T is revised to read as follows:

§ 1.141–15T Effective dates (temporary).

(a) through (e) [Reserved]. For further guidance see § 1.141–15.

(f) *Effective dates for certain regulations relating to output facilities*—(1) *General rule.* Except as otherwise provided in this section, §§ 1.141–7T and 1.141–8T apply to bonds sold on or after January 19, 2001, that are subject to section 1301 of the Tax Reform Act of 1986 (100 Stat. 2602).

(2) *Transition rule for requirements contracts.* For bonds otherwise subject to §§ 1.141–7T and 1.141–8T, § 1.141–7T(c)(4) applies to output contracts entered into on or after February 23, 1998. An output contract is treated as entered into on or after that date if its term is extended, the parties to the contract change, or other material terms are amended on or after that date. For purposes of this paragraph (f)(2)—

(i) The extension of the term of a contract causes the contract to be treated as entered into on the first day of the additional term;

(ii) The exercise by a party of a legally enforceable right that was provided under a contract before February 23, 1998, on terms that were fixed and determinable before such date, is not treated as an amendment of the contract. For example, the exercise by a purchaser after February 23, 1998 of a renewal option that was provided under a contract before that date, on terms identical to the original contract, is not treated as an amendment of the contract; and

(iii) An amendment that reduces the term of a contract, or the amount of requirements covered by a contract, is not, in and of itself, material.

(3) *Elective application of 1998 temporary regulations.* For an issue sold on or after January 19, 2001, and before February 15, 2001, an issuer may apply the provisions of §§ 1.141–7T and 1.141–8T in effect prior to January 19, 2001 (26 CFR part 1, revised April 1, 2000) in whole, but not in part, in lieu of applying §§ 1.141–7T and 1.141–8T.

(g) *Refunding bonds in general.* Except as otherwise provided in paragraph (h) or (i) of this section, §§ 1.141–7T and 1.141–8T do not apply to any bonds sold on or after January 19, 2001, to refund a bond to which §§ 1.141–7T and 1.141–8T do not apply unless—

(1) The refunding bonds are subject to section 1301 of the Tax Reform Act of 1986 (100 Stat. 2602); and

(2)(i) The weighted average maturity of the refunding bonds is longer than—

(A) The weighted average maturity of the refunded bonds; or

(B) In the case of a short-term obligation that the issuer reasonably

expects to refund with a long-term financing (such as a bond anticipation note), 120 percent of the weighted average reasonably expected economic life of the facilities financed; or

(ii) A principal purpose for the issuance of the refunding bonds is to make one or more new conduit loans.

(h) *Permissive retroactive application.* Except as provided in § 1.141–15(d) or (e) or paragraph (i) of this section, §§ 1.141–1 through 1.141–6, 1.141–7T through 1.141–8T, 1.141–9 through 1.141–14, 1.145–1 through 1.145–2, 1.150–1(a)(3) and the definition of bond documents contained in § 1.150–1(b) may be applied in whole, but not in part to—

(1) Outstanding bonds that are sold before January 19, 2001, and subject to section 141; or

(2) Refunding bonds sold on or after January 19, 2001, that are subject to section 141.

(i) *Permissive application of certain regulations pertaining to output contracts.* Section 1.141–7T(f)(4) and (5) may be applied to any bonds.

Par. 7. Section 1.142(f)(4)–1 is added to read as follows:

§ 1.142(f)(4)–1 Manner of making election to terminate tax-exempt bond financing.

(a) *Overview.* Section 142(f)(4) permits a person engaged in the local furnishing of electric energy or gas (a local furnisher) that uses facilities financed with exempt facility bonds under section 142(a)(8) and that expands its service area in a manner inconsistent with the requirements of sections 142(a)(8) and (f) to make an election to ensure that those bonds will continue to be treated as exempt facility bonds. The election must meet the requirements of paragraphs (b) and (c) of this section.

(b) *Time for making election*—(1) *In general.* An election under section 142(f)(4)(B) must be filed with the Internal Revenue Service on or before 90 days after the date of the service area expansion that causes bonds to cease to meet the requirements of sections 142(a)(8) and (f).

(2) *Date of service area expansion.* For the purposes of this section, the date of the service area expansion is the first date on which the local furnisher is authorized to collect revenue for the provision of service in the expanded area.

(c) *Manner of making election.* An election under section 142(f)(4)(B) must be captioned ''ELECTION TO TERMINATE TAX-EXEMPT BOND FINANCING'', must be signed under penalties of perjury by a person who has authority to sign on behalf of the local furnisher, and must contain the following information—

(1) The name of the local furnisher;

(2) The tax identification number of the local furnisher;

(3) The complete address of the local furnisher;

(4) The date of the service area expansion;

(5) Identification of each bond issue subject to the election, including the complete name of each issue, the tax identification number of each issuer, the report number of the information return filed under section 149(e) for each issue, the issue date of each issue, the CUSIP number (if any) of the bond with the latest maturity of each issue, the issue price of each issue, the adjusted issue price of each issue as of the date of the election, the earliest date on which the bonds of each issue may be redeemed, and the principal amount of bonds of each issue to be redeemed on the earliest redemption date;

(6) A statement that the local furnisher making the election agrees to the conditions stated in section 142(f)(4)(B); and

(7) A statement that each issuer of the bonds subject to the election has received written notice of the election.

(d) *Effect on section 150(b).* Except as provided in paragraph (e) of this section, if a local furnisher files an election within the period specified in paragraph (b) of this section, section 150(b) does not apply to bonds identified in the election during and after that period.

(e) *Effect of failure to meet agreements.* If a local furnisher fails to meet any of the conditions stated in an election pursuant to paragraph (c)(6) of this section, the election is invalid.

(f) *Corresponding provisions of the Internal Revenue Code of 1954.* Section 103(b)(4)(E) of the Internal Revenue Code of 1954 set forth corresponding requirements for the exclusion from gross income of the interest on bonds issued for facilities for the local furnishing of electric energy or gas. For the purposes of this section any reference to sections 142(a)(8) and (f) of the Internal Revenue Code of 1986 includes a reference to the corresponding portion of section 103(b)(4)(E) of the Internal Revenue Code of 1954.

(g) *Effective dates.* This section applies to elections made on or after January 19, 2001.

§ 1.142(f)(4)–1T [Removed]

Par. 8. Section 1.142(f)(4)–1T is removed.

Par. 9. Section 1.150–5 is added to read as follows:

§ 1.150–5 Filing notices and elections.

(a) *In general.* Notices and elections under the following sections must be filed with the Internal Revenue Service, 1111 Constitution Avenue, NW, Attention: T:GE:TEB:O, Washington, DC 20224 or such other place designated by publication of a notice in the Internal Revenue Bulletin—

(1) Section 1.141–12(d)(3);

(2) Section 1.142(f)(4)-1; and

(3) Section 1.142–2(c)(2).

(b) *Effective dates.* This section applies to notices and elections filed on or after January 19, 2001.

§ 1.150–5T [Removed]

Par. 10. Section 1.150–5T is removed.

PART 602—OMB CONTROL NUMBERS UNDER THE PAPERWORK REDUCTION ACT

Par. 11. The authority for part 602 continues to read as follows:

Authority: 26 U.S.C. 7805.

Par. 12 . In § 602.101, paragraph (b) is amended by adding an entry in numerical order to the table to read as follows:

§ 602.101 OMB control numbers.

* * * * *

(b) * * *

CFR part or section where identified and described	Current OMB control No.
* * * * *	
1.142(f)(4)–1	1545–1730
* * * * *	

Robert E. Wenzel,

Deputy Commissioner of Internal Revenue.

Approved: January 10, 2001.

Jonathan Talisman,

Assistant Secretary of the Treasury.

[FR Doc. 01–1412 filed 1–17–01; 8:45 am]

BILLING CODE 4830–01–P

DEPARTMENT OF THE INTERIOR

Office of Surface Mining Reclamation and Enforcement

30 CFR Part 931

[NM–041–FOR]

New Mexico Regulatory Program

AGENCY: Office of Surface Mining Reclamation and Enforcement, Interior.

ACTION: Final rule, approval of amendment.

SUMMARY: The Office of Surface Mining Reclamation and Enforcement (OSM) is

approving a proposed amendment to the New Mexico regulatory program (hereinafter, the ''New Mexico program'') under the Surface Mining Control and Reclamation Act of 1977 (SMCRA). New Mexico proposed to recodify the New Mexico Surface Coal Mining Regulations. The amendment revised the State program to improve operational efficiency and ensure that the New Mexico Surface Coal Mining Regulations were codified according to the New Mexico administrative rules.

EFFECTIVE DATE: January 18, 2001.

FOR FURTHER INFORMATION CONTACT: Willis L. Gainer, Telephone: (505) 248–5096, Internet address: WGAINER@SMRE.GOV.

SUPPLEMENTARY INFORMATION:

I. Background on the New Mexico Program

On December 31, 1980, the Secretary of the Interior conditionally approved the New Mexico program. General background information on the New Mexico program, including the Secretary's findings, the disposition of comments, and the conditions of approval of the New Mexico program can be found in the December 31, 1980, **Federal Register** (45 FR 86459). Subsequent actions concerning New Mexico's program and program amendments can be found at 30 CFR 931.11, 931.15, 931.16, and 931.30.

II. Proposed Amendment

By letter dated September 22, 2000, New Mexico submitted a proposed amendment to its program (administrative record No. NM–840) pursuant to SMCRA (30 U.S.C. 1201 *et seq.*). New Mexico submitted the proposed amendment at its own initiative. New Mexico proposed to recodify the New Mexico Surface Coal Mining Regulations.

OSM announced receipt of the proposed amendment in the October 23, 2000, **Federal Register** (65 FR 63223), provided an opportunity for a public hearing or meeting on its substantive adequacy, and invited public comment on its adequacy (administrative record No. NM–842). Because no one requested a public hearing or meeting, none was held. The public comment period ended on November 22, 2000.

III. Director's Findings

As discussed below, the Director, in accordance with SMCRA and 30 CFR 732.15 and 732.17, finds that the proposed program amendment, submitted by New Mexico on September 22, 2000, is no less effective than the corresponding Federal regulations and no less stringent than SMCRA. Accordingly, the Director approves the proposed amendment.

Minor Revisions to New Mexico's Rules

New Mexico proposed recodification of previously-approved New Mexico Surface Coal Mining Regulations including revisions that are minor in nature, consisting of minor wording, editorial and punctuation changes. Specifically, New Mexico proposed to recodify its regulations from Title 19 (Natural Resources and Wildlife), Chapter 8, (Coal Mining), Part 2 (Coal Surface Mining) of the New Mexico Administrative Code (19 NMAC 8.2), Subparts 1 through 34 to Title 19 (Natural Resources and Wildlife), Chapter 8, (Coal Mining) of the New Mexico Administrative Code (19.8 NMAC), Parts 1 through 34. In addition to the renumbering and reformatting, New Mexico proposed to revise the history references after each section and added to the rule history at the end of each part. No substantive changes to the text of the regulations were proposed.

Because the proposed revisions to these previously-approved rules are minor in nature, the Director finds that these proposed New Mexico rules are no less effective than the Federal regulations at Title 30 (Mineral Resources), Chapter VII (Office of Surface Mining Reclamation and Enforcement, Department of the Interior), Parts 700 through 887. The Director approves the proposed recodification of New Mexico's rules.

IV. Summary and Disposition of Comments

Following are summaries of all substantive written comments on the proposed amendment that were received by OSM, and OSM's responses to them.

1. Public Comments

OSM invited public comments on the proposed amendment (administrative record Nos. NM–841 and NM–842), but none were received.

2. Federal Agency Comments

Pursuant to 30 CFR 732.17(h)(11)(i), OSM solicited comments on the proposed amendment from various Federal agencies with an actual or potential interest in the New Mexico program (administrative record No. NM–841). None were received.

3. Environmental Protection Agency (EPA) Concurrence and Comments

Pursuant to 30 CFR 732.17(h)(11)(ii), OSM is required to solicit the written concurrence of EPA with respect to those provisions of the proposed amendment that relate to air or water quality standards promulgated under the authority of the Clean Water Act (33 U.S.C. 1251 *et seq.*) or the Clean Air Act (42 U.S.C. 7401 *et seq.*).

None of the revisions that New Mexico proposed to make in its amendment pertain to air or water quality standards. Pursuant to 30 CFR 732.17(h)(11)(i), OSM solicited comments on the proposed amendment from EPA (administrative record No. NM–841). It did not respond to OSM's request.

4. State Historic Preservation Officer (SHPO) and the Advisory Council on Historic Preservation (ACHP)

Pursuant to 30 CFR 732.17(h)(4); OSM solicited comments on the proposed amendment from the SHPO and ACHP (administrative record No. NM–841). Neither SHPO nor ACHP responded to OSM's request.

V. Director's Decision

Based on the above finding, the Director approves New Mexico's proposed amendment as submitted on September 22, 2000.

The Federal regulations at 30 CFR part 931, codifying decisions concerning the New Mexico program, are being amended to implement this decision. This final rule is being made effective immediately to expedite the State program amendment process and to encourage States to bring their programs into conformity with the Federal standards without undue delay. Consistency of State and Federal standards is required by SMCRA.

VI. Procedural Determination

Executive Order 12866—Regulatory Planning and Review

This rule is exempted from review by the Office of Management and Budget (OMB) under Executive Order 12866 (Regulatory Planning and Review).

Executive Order 12630—Takings

This rule does not have takings implications. This determination is based on the analysis performed for the counterpart federal regulation.

Executive Order 13132—Federalism

This rule does not have federalism implications. SMCRA delineates the rules of the federal and state governments with regard to the regulation of surface coal mining and reclamation operations. One of the purposes of SMCRA is to ''establish a nationwide program to protect society and the environment from the adverse effects of surface coal mining

operations.'' Section 503(a)(1) of SMCRA requires that state laws regulating surface coal mining and reclamation operations be ''in accordance with'' the requirements of SMCRA, and section 503(a)(7) requires that state programs contain rules and regulations ''consistent with'' regulations issued by the Secretary pursuant to SMCRA.

Executive Order 12988—Civil Justice Reform

The Department of the Interior has conducted the reviews required by section 3 of Executive Order 12988 (Civil Justice Reform) and has determined that this rule meets the applicable standards of subsections (a) and (b) of that section. However, these standards are not applicable to the actual language of State regulatory programs and program amendments since each such program is drafted and promulgated by a specific State, not by OSM. Under sections 503 and 505 of SMCRA (30 U.S.C. 1253 and 1255) and the Federal regulations at 30 CFR 730.11, 732.15, and 732.17(h)(10), decisions on proposed State regulatory programs and program amendments submitted by the States must be based solely on a determination of whether the submittal is consistent with SMCRA and its implementing Federal regulations and whether the other requirements of 30 CFR Parts 730, 731, and 732 have been met.

National Environmental Policy Act

This rule does not require an environmental impact statement because section 702(d) of SMCRA (30 U.S.C. 1292(d)) provides that agency decisions on proposed State regulatory program provisions do not constitute major Federal actions within the meaning of section 102(2)(C) of the National Environmental Policy Act (42 U.S.C. 4332(2)(C)).

Paperwork Reduction Act

This rule does not contain information collection requirements that require approval by OMB under the Paperwork Reduction Act (44 U.S.C. 3507 *et seq.*).

Regulatory Flexibility Act

The Department of the Interior has determined that this rule will not have a significant economic impact on a substantial number of small entities under the Regulatory Flexibility Act (5 U.S.C. 601 *et seq.*). The State submittal that is the subject of this rule is based upon counterpart Federal regulations for which an economic analysis was prepared and certification made that such regulations would not have a significant economic effect upon a substantial number of small entities . Accordingly, this rule will ensure that existing requirements previously promulgated by OSM will be implemented by the State. In making the determination as to whether this rule would have a significant economic impact, the Department relied upon the data and assumptions for the counterpart Federal regulations.

Small Business Regulatory Enforcement Fairness Act

This rule is not a major rule under 5 U.S.C. 804(2), the Small Business Regulatory Enforcement Fairness Act. This rule: a. does not have an annual effect on the economy of $100 million; b. will not cause a major increase in costs or prices for consumers, individual industries, federal, state, or local government agencies, or geographic regions; and c. does not have significant adverse effects on competition, employment, investment, productivity, innovation, or the ability of U.S.-based enterprises to compete with foreign-based enterprises.

This determination is based upon the fact that the state submittal which is the subject of this rule is based upon counterpart Federal regulations for which an analysis was prepared and a determination made that the Federal regulation was not considered a major rule.

Unfunded Mandates.

OSM has determined and certifies under the Unfunded Mandates Reform Act (2 U.S.C. 1502 *et seq.*) that this rule will not impose a cost of $100 million or more in any given year on any local, State, or tribal governments or private entities.

List of Subjects in 30 CFR Part 931

Intergovernmental relations, Surface mining, Underground Mining.

Dated: January 3, 2001.

Brent T. Wahlquist,

Regional Director, Western Regional Coordinating Center.

For the reasons set out in the preamble, Title 30, Chapter VII, Subchapter T of the Code of Federal Regulations is amended as set forth below:

PART 931—NEW MEXICO

1. The authority citation for part 931 continues to read as follows:

Authority: 30 U.S.C. 1201 *et seq.*

2. Section 931.15 is amended in the table by adding a new entry in chronological order by ''Date of Final Publication'' to read as follows:

§ 931.15 Approval of New Mexico regulatory program amendments.

* * * * *

Original amendment submission date	Date of final publication	Citation/description
*	*	*
September 22, 2000	January 18, 2001	19.8 NMAC Parts 1 through 34 (recodification)

[FR Doc. 01–1474 Filed 1–17–01; 8:45 am]

BILLING CODE 4310–05–M

DEPARTMENT OF HEALTH AND HUMAN SERVICES

Health Care Financing Administration

42 CFR Parts 416, 482, and 485

[HCFA–3049–F]

RIN 0938–AK08

Medicare and Medicaid Programs; Hospital Conditions of Participation: Anesthesia Services.

AGENCY: Health Care Financing Administration (HCFA), HHS.

ACTION: Final rule.

SUMMARY: This final rule amends the Anesthesia Services Condition of Participation (CoP) for hospitals, the Surgical Services Condition of Participation for Critical Access Hospitals (CAH), and the Ambulatory Surgical Center (ASC) Conditions of Coverage Surgical Services. This final rule changes the physician supervision requirement for certified registered nurse anesthetists furnishing anesthesia services in hospitals, CAHs, and ASCs. Under this final rule, State laws will determine which professionals are permitted to administer anesthetics and the level of supervision required, recognizing a State's traditional domain in establishing professional licensure and scope-of-practice laws. States and hospitals are free to establish additional standards for professional practice and oversight as they deem necessary.

The hospital anesthesia services CoP, CAH surgical services CoP, and the conforming change to the anesthesia Conditions of Coverage apply to all Medicare and Medicaid participating hospitals, CAHs, and ASCs.

EFFECTIVE DATE: These regulations are effective on March 19, 2001.

FOR FURTHER INFORMATION CONTACT:
Stephanie A. Dyson RN, BSN (410) 786–9226
Debbra M. Hattery RN, MS (410) 786–1855

SUPPLEMENTARY INFORMATION:

Copies

To order copies of the **Federal Register** containing this document, send your request to: New Orders, Superintendent of Documents, P.O. Box 371954, Pittsburgh, PA 15250–7954. Specify the date of the issue requested and enclose a check or money order payable to the Superintendent of Documents, or enclose your Visa or Master Card number and expiration date. Credit card orders can also be placed by calling the order desk at (202) 512-1800 or by faxing to (202) 512–2250. The cost for each copy is $8. As an alternative, you can view and photocopy the **Federal Register** document at most libraries designated as Federal Depository Libraries and at many other public and academic libraries throughout the country that receive the **Federal Register**.

This **Federal Register** document is also available from the **Federal Register** online database through GPO access, a service of the U.S. Government Printing Office. The Website address is http://www.access.gpo.gov/nara/index.html.

I. Background

A. Legislation

Sections 1861(e)(1) through (e)(8) of the Social Security Act (the Act) provide that a hospital participating in the Medicare program must meet certain specified requirements. Section 1861(e)(9) of the Act specifies that a hospital also must meet such other requirements as the Secretary finds necessary in the interest of the health and safety of the hospital's patients. Section 1820 of the Act contains criteria for application for States establishing a Critical Access Hospital. Sections 1832(a)(2)(F)(i) and 1833(i) provide coverage requirements for ASCs. Section 1861(bb) of the Act, provides definitions for certified registered nurse anesthetists (CRNAs) and their services.

B. General

On December 19, 1997, we published the proposed rule, ''Hospital Conditions of Participation, Provider Agreements and Supplier Approval,'' (62 FR 66726) in the **Federal Register**. This proposed rule generated over 60,000 public comments and approximately one-third of these comments addressed the proposed condition eliminating the Federal requirement for physician supervision of a licensed independent practitioner permitted by the State to administer anesthetics.

In 1997, when we proposed our changes to the current hospital conditions of participation (CoPs), we stated our desire to move toward standards that are patient-centered, evidence-based, and outcome oriented. We also stated that a fundamental principle was to facilitate flexibility in how a hospital meets our performance expectations, and eliminate structure and process requirements unless there is evidence that they are predictive of desired outcomes for patients. Where there is agreement on a structure or process requirement predictive of desired patient outcomes, we included that in our proposed rule. In fact, comments on the standard for physician supervision of CRNAs reflect a split between those who support flexibility in allowing States and hospitals to make decisions about anesthesia services and those who oppose the provision, supporting, instead, the structural requirement for physician supervision. We have already finalized the Organ Donation and Transplantation and Patients' Rights conditions, which were contained in the December 19, 1997 proposed hospital rule. We are now finalizing part of the anesthesia services standard describing anesthesia administration. We continue to work to finalize the other issues in the December 19, 1997 hospital conditions of participation proposed rule.

C. Need for Amended Anesthesia Services CoP

The existing hospital CoPs require hospitals, CAHs, and ASCs to provide quality care by adhering to our organizational and staffing requirements. The current hospital CoPs are not written in a way that promote or encourage a hospital, CAH, or ASC to assess the quality of care and improve patient outcomes. One of the clear messages we received from industry groups and professionals as we pursued this change in regulatory approach is that the old way of focusing on structure and process no longer represented current practice or the best available method to foster delivery of quality health care services.

Since publication of the December 19, 1997 proposed rule, we have continued to receive input from representatives of individual industry groups and have analyzed thousands of public comments from individual providers, beneficiaries, hospitals, and professional and provider organizations. We have given careful consideration to the scientific literature cited by commenters. We have found no compelling scientific evidence that an across-the-board Federal physician supervision requirement for CRNAs leads to better outcomes, or that there will be adverse outcomes by relying on State licensure laws instead.

We are also responding to considerable Congressional activity that has occurred since the 1997 publication of the proposed rule. Interest by Congress on both sides of the issue of physician supervision resulted in Appropriations Conference committee language in the Conference Report to the Balanced Budget Refinement Act (BBRA) of 1999 (H. Conf. Rep. No.106–

479, at 873 (November 18, 1999)) urging the Secretary to determine whether there was sufficient information to move forward with a final rule. The literature we reviewed (see appendix) indicated that the anesthesia-related death rate is extremely low, and that the administration of anesthesia in the United States is safe relative to surgical risk.

There have been no studies published within the last 10 years demonstrating any need for Federal intervention in State professional practice laws governing CRNA practice. Currently, there is no reason to require a Federal rule in these conditions of participation mandating that physicians supervise the practice of another State-licensed health professional where there is a statutory provision authorizing direct Medicare payment for the services of that health professional. We believe there is no reason to change our proposed approach, which gives States and hospitals the flexibility to determine necessary oversight. We believe the change, based on the available information, appropriately reflects the important value of regulatory flexibility.

D. Recognizing State Laws and Professional Scope of Practice

Congress has specified which non-physician health professionals may receive separate payment for their professional services (such as CRNAs and nurse practitioners). In addition, Congress left the function of licensing these health professionals to the States. Medicare recognizes the scope of practice established by the States for these health professionals. Prior to this final rule, Medicare's hospital CoPs did not have Federal requirements for physicians to supervise the practice of another State-licensed health professional where there is a statutory provision authorizing direct Medicare payment for the services of that health professional, with the sole exception of the Federal requirement for physician supervision of CRNAs. We do not believe that there is evidence to support maintaining a special Federal requirement for physician supervision of CRNAs.

Eliminating the Federal requirement for physician supervision of CRNAs is not a judgment on our part that one health professional is better than another or that one type of care is superior. The change in regulatory approach reflected in this final rule was discussed in the preamble of the hospital CoPs proposed rule (62 FR 66740). This rule establishes a shared commitment to quality care among us, the States, and Medicare providers. Medicare providers are in the best position to assess the evidence and consider data relevant to their own situations (for example, physician access, hospital and patient characteristics and needs of rural areas) about the best way to deliver anesthesia care. Hospitals can always exercise stricter standards than required by State law. We will monitor the effects on the quality of anesthesia care furnished to Medicare beneficiaries resulting from the greater flexibility provided to States and hospitals under this rule.

II. Analysis of and Responses to Public Comments

We received approximately 20,000 comments on the issue of physician supervision of CRNA administration of anesthesia. Comments were largely split among CRNAs, representatives of rural areas, and supporters of State oversight who favor the proposal; and physicians who, in general, opposed the proposal and argued that anesthesia administration is the practice of medicine, requiring advanced medical education. A summary of the major issues and our responses follow:

State Law and Professional Scopes of Practice

Comment: The majority of comments focused on whether States' scope-of-practice laws are the proper level of regulatory oversight. Most physicians maintained that anesthesia is the practice of medicine which should only be practiced by a licensed physician, and opposed the provision permitting State licensed independent practitioners to administer anesthetics without physician supervision. These commenters argued that, because of disparities among the various States, laws are inconsistent and result in inequality of care across the country. As a result, they stated that Medicare beneficiaries would lose an important Federal guarantee for minimum standards of anesthesia care, and instead would be subjected to a variety of State laws. Conversely, other commenters argued that the Federal rule preempts State law, creating barriers to practice and limiting opportunity for nurse anesthetists licensed as independent practitioners. A physician supervision requirement, they asserted, diminishes the role of local jurisdictions and authorities that regulate and/or license other health professions and aspects of health service delivery. Commenters also stated that the current Federal requirement for physician supervision has been a disincentive for employers to hire CRNAs, decreasing flexibility and efficiency in anesthesia services, and limiting access in certain areas. One commenter wrote that it is the State that best understands its individual geographical, population, and financial needs and resources and how these resources can best be utilized to deliver safe, quality anesthesia services.

Response: We respect the authority of States to meet regional/local needs. Setting forth a final rule that allows States the ultimate determination regarding which licensed independent practitioners may administer anesthesia does not prohibit any State or hospital from requiring physician supervision. It will effectively provide greater discretion to State authorities that are experienced at regulating the licensing, education, training, and skills of the professionals practicing under their purview, without the burden associated with duplicative regulatory oversight. There is no evidence that States are less concerned with ensuring safety and quality than the Federal government, especially where the health of their citizens is at stake. We disagree that States are less capable or less committed to protecting patients and ensuring quality anesthesia services than the Federal government. The final rule removes the ''across the board'' Federal requirement for physician supervision in every case of anesthesia administration. At the same time, it broadens overall flexibility by permitting individuals and authorities closer to patient care delivery to make decisions about the best way to deliver health care services.

Comment: Some commenters were concerned that this change in regulatory approach would grant the right to practice medicine to individuals who were not properly prepared to do so. One commenter pointed out that we were giving unsupervised privileges to prescribe narcotics, paralytic agents, and cardiac drugs to people who have neither a medical license nor the training and credentialing that is associated with a medical license.

Response: States regulate professionals who may prescribe medicines as well as which medical procedures may be performed under a professional license through their professional practice laws. Our regulations do not determine prescribing authority or grant medical licenses, and this final rule does not change the traditional purview under which these professional scope-of-practice issues have occurred in the past. The final rule does not prohibit physicians from practicing medicine, nor does it allow nurse anesthetists to practice beyond the scope of their

practice or authority granted them by States.

Comment: We received several comments from both physicians and nurse anesthetists in support of allowing physicians, hospitals, and surgical centers more responsibility for the care they furnished. Some commenters noted that the medical staffs within institutions should determine guidelines for supervision of all health care personnel contributing to the medical care of patients. Several commenters recognized the value of allowing hospital boards and medical staffs to set the standards of care. These commenters thought that relying on greater accountability from doctors and hospitals instead of Federal regulation would lead to better care for patients. Commenters noted that this rule would allow hospitals to set standards different from us, based on review and input from physicians and other health professionals. The American Hospital Association (AHA) also supported this rule change, stating ''This new policy ensures that only personnel trained in administering anesthesia are allowed to do so. This requirement balances accountability with flexibility.''

Response: We agree that providers have a shared responsibility, with us and the States, to assure quality standards of practice. We are pleased that the hospital industry recognizes the values of accountability and flexibility in Federal regulation. Allowing States to make determinations about health care professional standards of practice, and hospitals to make decisions regarding the delivery of care, assures that those closest to, and who know the most about, the health care delivery system are accountable for the outcomes of that care.

Comment: Several commenters stated that the administration of anesthesia has never been exclusively the practice of medicine. These commenters noted that anesthesia administration is within the scope of practice of nurses, physicians, dentists, podiatrists, and other professionals who have been properly educated and credentialed in the field of anesthesia. Since more surgical procedures are moving out of the hospital into clinic and office settings, an institution needs the flexibility to utilize the anesthesia professional of its choice which best matches the needs of the patient.

Response: Although this final rule governs anesthesia administration in hospital, CAH, and ASC settings only, we agree with the need for flexibility in other settings, especially as surgical techniques, methods for administering anesthesia and the availability of drugs is improved.

We believe that the range of patient types, surgical procedures, new technologies, and provider settings (for example, hospital outpatient departments, intensive care units, and teaching hospitals) makes an across-the-board Federal requirement overly burdensome. Differences between a healthy young patient undergoing minor surgery in a hospital outpatient department and a medically compromised, elderly patient undergoing major surgery in a large teaching facility are so great that a single Federal requirement is not applicable in every situation.

Comment: Several commenters objected to our arguments that eliminating CRNA supervision would, ''allow greater flexibility to hospitals and practitioners'' and would ''give deference to State scope-of-practice laws''. These commenters believe that our reasoning is weak, especially in the absence of documentation that either of these issues is a problem.

Response: We disagree with these commenters. As previously noted, we respect State control and oversight of health care professionals by deference to State licensing laws which regulate professional practice. There is no reason to consider physician supervision of CRNAs a special case requiring a national standard. Advances in anesthesia and surgical techniques, the availability and discovery of new drugs, and the varying medical presentations of patients make it less prudent to rely on a single national standard requiring physician supervision of CRNAs to be applied in every situation. Doing so risks losing the accountability of practitioners, both to make clinical decisions based on the needs of patients, and to utilize resources effectively. We believe States need flexibility from Federal oversight of those processes, such as professional licensing, for which they are ultimately accountable. In fact, it is at the State level where much direct input by health professionals into scope-of-practice and licensing laws takes place.

Comment: One commenter asked what rule would be operative in the absence of any State law.

Response: The final rule allows only a licensed practitioner permitted by the State to administer anesthetics to do so. Therefore, State health professional practice laws, such as those covering nurse and physician practice, as well as hospital licensing requirements, would be the basis for determining which health care professionals can administer anesthesia in any given State.

Safety and Quality of Care

Comment: Many of the commenters who wrote expressing concern over quality of anesthesia services referred to published research to support their point of view. For example, many commenters who support the proposed rule stated that evidence shows anesthesia administered by CRNAs to be as safe as that administered by anesthesiologists. In contrast, we also received comments from anesthesiologists who noted positive patient outcomes from anesthesia administration to be related to the presence of the anesthesiologist. The articles most frequently cited by commenters were three by Jeffrey Silber, M.D. and colleagues (1992, 1995, 1997), and another by J.P. Abenstein and M.A. Warner (1996). Many commenters claimed these studies concluded either an anesthesiologist alone, or a CRNA in ''collaboration'' with an anesthesiologist, had better patient outcomes than a CRNA alone. Many commenters contend, erroneously, the recommendations from the Abenstein & Warner article were adopted by the Minnesota legislature (although it is not clear to what recommendations the commenters were referring). Many other commenters urged us not to consider the change made by this rule until there is solid, scientifically defensible outcome data to establish that independent nurse anesthesia care is just as safe as anesthesiologist care.

Response: The conclusions of the commenters were not supported by findings from the studies they cited, nor do the studies conclude that States provide inadequate oversight and that a Federal standard is therefore necessary. We reviewed available literature and found the following major conclusions (see appendix).

- All literature surveyed agreed that the anesthesia-related death rate is extremely low, and the administration of anesthesia in the United States is safe relative to surgical risk. In fact, according to the 1999 Institute of Medicine Report *To Err Is Human,* ''anesthesia mortality rates are about one death per 200,000–300,000 anesthetics administered, compared with two deaths per 10,000 anesthetics administered in the early 1980s,'' a 40- to 60-fold improvement.
- There are no studies published within the last 10 years that are specific to the issue of the final rule, namely provision of anesthesia care by CRNAs practicing without physician supervision. All of the studies we reviewed had significant limitations. Conclusions are limited by these

studies' failure to control adequately for possible correlations among variables such as higher risk patients and hospital characteristics (for example, size and sophistication of medical technology) as they would affect deaths attributable to anesthesia.

• There is no evidence that there would be adverse outcomes by relying on States and hospitals to regulate the appropriate supervision and scope of practice of health professionals administering anesthesia. Nor has there been any evidence that States do a poor job in regulating and overseeing health care professional practice or that States are not capable of making decisions regarding requirements for supervision of one State-licensed independent practitioner by another.

In the Silber studies, the authors did not conclude that CRNAs may be providing poor care that might more likely lead to negative outcomes. The 1992 study did not address whether there is an association between patient outcomes and the type of professional who furnished anesthesia. The anesthesia variable used in the study was not specific to the patient, rather it was a variable at the hospital level (for example, percent of anesthesiologists who are board-certified). The anesthesia variable might be a proxy indicator of quality of the hospital: Thus, there would be lower mortality in the higher quality hospitals and if a complication occurred the patient would more likely be rescued.

Silber urges ''that the limitations of the project be recognized.'' The limitations include: There were relatively few deaths, adverse outcomes and failures, and relatively few patients per hospital so the rates could only be compared for groups of hospitals, not specific facilities.

In a subsequent article to the one summarized above, Silber and colleagues (1995) found that ''most of the predictable variation in outcome rates among hospitals appears to be predicted by differing patient characteristics rather than by differing hospital characteristics, that is, by who is treated rather than by the resources available for treatment.'' The authors found higher proportions of board-certified anesthesiologists to be associated with lower death and failure rates, but also with higher adverse occurrence rates. The study did not address the relationship between the patient outcomes and the type of professional who furnished the anesthesia care. The study did not address the issue of provision of anesthesia care by CRNAs supervised and not supervised by physicians. The article presents no information that States are not capable of making decisions regarding requirements for supervision of one State-licensed independent practitioner by another. Silber and his colleagues (1997) have also conducted methodological studies that compare the usefulness of three outcome measures, mortality, complication and failure-to-rescue rates. They concluded that for the general surgical procedures studied, the complication rate is poorly correlated with the death and failure rate. The authors suggest that great caution be taken when using complication rates and that they should not be used in isolation when assessing hospital quality of care. The study did not address the relationship between the patient outcomes and the type of professional who furnished the anesthesia care. Nor did the study address the issue of provision of anesthesia care by CRNAs supervised and not supervised by physicians, the issue in the rule. The article presents no information that States are not capable of making decisions regarding requirements for supervision of one State-licensed independent practitioner by another.

We have also reviewed a more recently published article by Dr. Silber (July 2000) and colleagues from the University of Pennsylvania. This article also is not relevant to the policy determination at hand because it did not study CRNA practice with and without physician supervision, again the issue of this rule. Moreover, it does not present evidence of any inadequacy of State oversight of health professional practice laws, and does not provide sound and compelling evidence to maintain the current Federal preemption of State law.

Even on its own terms, the study has the following methodological shortcomings:

• The study used a non-experimental research design and only examined claims data, instead of reviewing medical records or observing actual care. Even though the researchers statistically controlled for 106 proxy indicators of care, without a stronger research design, they can only make a weak conclusion about an ''association'' between a variable and an outcome.

• The study did not control for the cause of death. Cases where a patient died from an anesthesia related cause, the surgery itself, an unrelated medical error, or an unknown medical condition are all considered, regardless of the cause of death. Not having data on deaths actually attributed to anesthesia is problematic since the mortality data used covers any death occurring within 30 days of a hospital admission. Events occurring 30 days from admission cannot be attributed to the anesthesia care alone. While the researchers argue that ''delayed'' death (that is, within 30 days of admission) is the appropriate measure of mortality for anesthesia care, the study does not produce causal evidence for such a theory. At a minimum, the researchers could have presented results for mortality measured for shorter periods of time such as within 72 hours of admission which may or may not have shown different outcomes for short-term and delayed deaths.

• Both the study and comparison groups included cases where physicians supervised CRNAs and personally furnished anesthesia. (The study group also included cases where anesthesiologists medically directed residents). The purpose of the study was to examine differences when an anesthesiologist versus a non-anesthesiologist physician is involved in the case. One cannot use this analysis to make conclusions about CRNA performance with or without physician supervision.

• The study used data where anesthesia was furnished by unknown suppliers (incorrectly referred to in the article as ''unknown providers'') either personally providing care or supervising CRNAs. Because a supplier is not a physician there are likely to be data coding errors which could contaminate and bias the results.

Even if the methodological shortcomings were fixed, because the study did not address the issue in the final rule, it is inappropriate to impute results from this study to the issue in this final rule, the provision of care by CRNAs supervised and not supervised by physicians.

Even if the recent Silber study did not have methodological problems, we disagree with its apparent policy conclusion that an anesthesiologist should be involved in every case, either personally performing anesthesia or providing medical direction of CRNAs. Such a policy is much more restrictive than current Medicare policy because it would prohibit non-anesthesiologist physicians to supervise CRNAs. This would make it difficult to perform surgeries in many small and rural hospitals because anesthesiologists generally do not practice in these hospitals.

Finally, even if we were to consider that the Silber article should guide our policy, we note, that due to the difference between relative risk and absolute risk, the reported size-effect is too small to cause us to change our

decision. The Silber article reported an odds ratio for death of 1.08 corresponding to 2.5 excess deaths per 1000 cases (relative risk). However, due to the lack of medical record review in this study these excess deaths cannot be solely attributed to anesthesia care and thus is not the absolute risk. For example, if we accept the IOM review of the literature of 33.3–50 anesthesia related deaths per 10 million (*i.e.,* one per 200,000–300,000) then the absolute risk of excess deaths would be in the range of 2.7–4.0 per 10 million (.08 times range of 33.3–50). This size of absolute risk must be balanced against the risk of death due to lack of timely access to anesthesia services because of a federal imposition of a supervision requirement. At a minimum States are certainly capable of balancing the risks of lack of supervision versus the shortage of anesthesiologists given the supply of anesthesiologists in each of their respective States.

The Abenstein & Warner (1996) paper describes a number of aspects of anesthesia care and reviews studies in several areas. The paper notes that there has been a dramatic improvement in anesthetic deaths in the last 15 years: ''Since 1979, five studies have documented a remarkably abrupt decrease in anesthetic-related death rates, morbidity, and risk of perioperative deaths.'' The paper concludes that: For many patients, it is now as safe to be anesthetized as to be a passenger in an automobile.''

The paper notes that ''identifying the cause for the improvement in anesthetic outcome is as problematic as determining the cause of perioperative death.'' The paper indicates that ''huge numbers of surgical patients (that is, >1,000,000) must be enrolled in studies to provide the statistical power needed to determine whether there are associations between perioperative disability or death and various anesthetic techniques, technologies, and practice models.'' The paper notes that studies of this size are expensive. None of the studies reviewed meet this standard.

The paper reviewed two studies that compared mortality for anesthesia care furnished by anesthesiologists, and anesthesia care team and nurse anesthetist supervised by a physician. Neither meets the criteria for an adequate study identified in the paper. As the authors note, the first study did not provide statistical analysis of the data. The second study used data now 25 years old and found no statistically significant difference between the groups. Neither study examined the provision of anesthesia furnished independently by CRNAs, the issue of this rule.

The paper suggested a number of reasons for improved anesthesia care including ''new and improved patient monitoring techniques.'' The paper also notes that the ''decline in adverse outcomes occurred at the same time that the number of American trained physicians entering and graduating from anesthesiology residency programs more than doubled (1975–1985).'' The paper suggests that ''the increase in the number of physicians engaged in the practice of anesthesiology is primarily responsible for the dramatic improvement in perioperative outcomes.'' However, the paper also notes that during roughly the same period of time, 1970–1985, the number of active nurse anesthetists doubled.

On the basis of studies which are flawed methodologically, which do not prove causality, and which do not meet the authors' own criteria for rigorous study, the authors nevertheless conclude that ''the presence of board-certified anesthesiologists has been associated with the decline in death and disability commonly attributed to adverse perioperative events.'' The authors' conclusion is not substantiated by their own review and analysis of the literature. Finally, the paper presents no information regarding the issue in the rule or that States are not capable of making decisions regarding requirements for supervision of one State-licensed independent practitioner by another.

As part of the decision to finalize the rule, we considered the feasibility of conducting a study comparing the mortality and adverse outcomes of Medicare patients for anesthesia care furnished by CRNAs with and without physician supervision. However, we concluded that it was not feasible to conduct such a retrospective study. Not only would the low overall anesthesia mortality make it difficult to develop a sufficient sample, but because of the current Medicare rule, there are no cases where CRNAs practice without supervision and thus there would be no data for the key comparison. We also considered the feasibility of conducting a study using data from non-Medicare patients. However, because Medicare's current hospital conditions of participation apply to all patients, here too there would be no data for the key comparison. Finally, we do not believe that it would be wise to conduct a prospective demonstration which would waive State law and prospectively randomly assign patients to study and control groups because it would remove patient choice of anesthesia professional.

Comment: Several commenters felt strongly that anesthesia should be considered a high-risk procedure where mistakes are measured in terms of death and injury. These commenters believe that millions of patients will be at a higher risk for injury without the supervision of board certified anesthesiologists. One commenter noted that without the requirement, no trained physician would be available to respond to any emergency during a case where a CRNA was practicing independently.

Response: If we were to require board certification for anesthesiologists as a hospital CoP it would be a stricter requirement than currently exists for the practice of any other medical specialty subject to our CoPs. Hospitals have been providing anesthesia care without a Federal requirement for board certified anesthesiologists since the inception of the Medicare program. This rule does not change the requirement that hospitals must have physicians available at all times and that all Medicare patients are under the care of a physician as defined in section 1861(r) of the Act. Therefore, the patient's medical and/or surgical care continues to be the responsibility of his or her assigned physician.

Comment: Several commenters wanted to know what had changed since a 1992 HCFA comment that, ''In view of the lack of definitive clinical studies on this issue, and in consideration of the risks associated with anesthesia procedures, we believe it would not be appropriate to allow anesthesia administration by a nonphysician anesthetist unless under supervision by either an anesthesiologist or the operating practitioner.''

Response: As discussed above, there are no definitive studies one way or the other which address this question. The studies we discussed in our 1992 final rule on fee schedules for CRNAs (57 FR 33878, July 31, 1992) have limitations, as does the literature since 1992. Moreover, there is no evidence that an across-the-board physician supervision requirement for CRNAs leads to better outcomes or that there will be adverse outcomes by relying on State licensure laws instead. What has changed since 1992 is our view that it is unnecessary to continue a special Federal preemption of State licensing laws regulating professional practice for CRNAs.

The 1999 IOM Report cites a drop in anesthesia mortality rates from two deaths per 10,000 anesthetics administered in the early 1980's to

about one death per 200,000 to 300,000 anesthetics administered today. Chassin (1998) identifies several studies which note this improvement is a result of ''a variety of mechanisms, including improved monitoring techniques, the development and widespread adoption of practice guidelines and other systematic approaches to reducing error.'' This is an impressive improvement and confirms the soundness of the approach taken in this final hospital CoP, which broadens the flexibility for States and providers, who are much closer to the realities of patient care, to make decisions about the best way to improve standards and implement best practices.

Comment: Several commenters stated that quality of care should be an important consideration in determining the need for physician supervision. Some commenters noted an association between improved anesthesia outcomes and increased numbers of anesthesiologists practicing. Many commenters noted that some CRNAs could function independently, but that others lack the judgement and knowledge to safely provide anesthesia without supervision. Further, commenters point out that CRNAs are more than capable of administering anesthesia on a healthy adult; however, when a patient's health is poor, an anesthesiologist should be involved in the care. Some nurse anesthetists report concern with their ability to deal with anesthetic complications without the availability of an anesthesiologist.

Response: Our decision to change the Federal requirement for supervision of CRNAs applicable in all situations is because, as stated in the preamble of the proposed rule, we are committed to changing current regulations that focus largely on procedural requirements, such as the Federal regulation mandating physician supervision of CRNAs. These comments make clear there are a range of factors to be considered (for example, patient types, surgical procedures, technology, and provider settings). Differences between a healthy young patient undergoing minor surgery in a hospital outpatient department and a medically compromised, elderly patient undergoing major surgery in a large teaching facility are so great that a single Federal requirement applicable in every situation is not sensible.

Comment: One commenter noted that the practice of anesthesiology extends beyond the operating room to the Intensive Care Unit (ICU), pain management, and other medical consultation. The commenter believes that the removal of the medical supervision requirement risks removing the anesthesiologist from the practice of anesthesia.

Response: The change in the physician supervision requirement for CRNAs does not affect the anesthesiologist's ability to provide services outside the operating room.

Comment: A few commenters told us they believed it was the Federal government's responsibility to set safety standards for the nation and this rule evades that responsibility. One commenter agreed that CRNAs have a good safety record, but emphasized that they have been under the direct supervision of the anesthesiologist. He believed that eliminating the supervision requirement would cause these positive patient outcomes to occur less frequently. Other commenters agreed that physicians absolutely need to be involved for the practice of medicine to be safe, and this regulation change is in direct violation of this principle. Some commenters noted that the practice of safe anesthesia administration is largely due to better monitoring techniques, technology, improved drugs, and not to greater supervision by a physician. One commenter stated that in combination with improved drugs and techniques, CRNAs will bring greater access to anesthesia services in situations and areas where they are currently limited in their practice because of the physician supervision requirement, thus allowing such delivery of medical services that improve patient health and safety, and provide services to a greater number of people.

Response: We are acutely aware that ensuring patient safety and high quality patient outcomes are the principal considerations in regulating providers. There is no indication that physician supervision of a CRNA affects such outcomes. It is for this reason that we are moving away from a focus on physician supervision, where there is no evidence or data linking this structural requirement to patient outcomes. As previously noted, changing the supervision requirement does not obviate the requirement that every Medicare patient admitted to the hospital be under the care of a physician or doctor of osteopathy. This requirement remains an important component in the hospital CoPs. Even under the current regulation CRNAs are not required to be under the supervision of an anesthesiologist; the operating physician can meet the rule's supervision requirement. This rule does not prohibit anesthesiologist supervision or administration; it simply leaves the decision up to State law or hospital policy.

This rule recognizes the significant improvement in the safety of anesthesia administration made by improved technology and implementation of practice guidelines. As in other areas of health care, new drugs and pharmaceuticals have contributed to improved patient outcomes as well. This underscores the findings in our review of the literature that multiple variables, some interacting in combination with each other, contribute to anesthesia-related patient outcomes.

Comment: We received several comments from beneficiaries who had received anesthesia care from a CRNA and felt comfortable with the service that was provided. They describe their anesthesia experiences as compassionate and thorough, including quality service and attention from these professionals. Many felt their care was excellent. Another commenter noted nurse anesthetists take time to be compassionate and attentive to fears, approaching anesthesia care holistically.

We also received comments from beneficiaries who felt that their care was being compromised for economic reasons by not requiring a doctor to be in charge of their anesthesia. Many reported increased fears during a time when they are most vulnerable, without the guarantee that a doctor will be in charge of their anesthesia care. Many reported that, as senior citizens, they faced more complicated medical and surgical procedures than younger patients and therefore that hospitals should be required to have a doctor in charge of administering their anesthesia.

Response: Patient experiences can be influenced not only by the anesthetist, but the surgeon, the type of procedure, the emergency nature of the procedure, and other factors. We also believe that many Medicare beneficiaries have been receiving anesthesia from CRNAs without being specifically aware of the credentials of the administering professional. We agree that a patient's perception of the safety and concern demonstrated by medical personnel is important but there is no evidence linking safety or better patient outcomes to the Federal requirement for physician supervision.

The change made by this rule is not specific to the patient's status as a Medicare beneficiary but to the participation of the provider in the Medicare program. The increased flexibility gained by this rule will allow hospitals and doctors to make decisions, pursuant to State law, about what is best for patients, reinforcing the primacy of the doctor-patient relationship.

Professional Education and Training

Comment: Several commenters noted the differences in training and education between a CRNA and an anesthesiologist. These differences were considered significant by anesthesiologists, who believe that anesthesia administration is the practice of medicine and should only be performed by physicians. Physician commenters pointed out that anesthesiologists receive in-depth training in physiology, pharmacology, diagnosis, treatment and independent management of patient care. In addition, because they are physicians and have received medical training, anesthesiologists assess a patient's medical condition, as well as plan and administer the anesthetic. One physician stated ''nurse anesthetists are trained to assist anesthesiologists; they are not physicians and are not trained in medical diagnosis and therapy. The lack of medical background prevents the CRNA from being able to diagnose and treat the unexpected, and often serious, reactions that can accompany anesthesia in even the simplest of cases. CRNAs should be considered valued extenders of care but not as substitutes for the expertise of an anesthesiologist.'' Other commenters stated that nurses are trained to follow orders and medical protocols, and are not trained to diagnose and treat. Several anesthesiologists, who had been nurse anesthetists, wrote describing that not until they had medical school training did they understand the full impact of the differences between the education preparing them as nurse anesthetists versus their preparation to practice as anesthesiologists. One commenter stated he believed the regulation should be based on demonstrated formal education. Another physician commenter stated he believed CRNAs were well educated and trained and had good records of performance, but that this was due to their collaboration with doctors, and not their independent management of medical situations.

Some commenters stated, inaccurately, that the postgraduate training of nurse anesthetists is unique in that, after a minimum of a bachelors degree in nursing, the nurse anesthetist student is required to have at least two years of practical experience in a critical care setting before advanced formal education in anesthetic administration. They stated that this advanced training prepares the nurse anesthetist to provide the full range of anesthesia services, independently. Several commenters noted that nurse anesthetists must be board certified by successfully completing the National Certification Examination. Other commenters felt that the knowledge and expertise in nurse anesthesia care is equivalent to the preparation provided physicians. Some commenters reminded us that the Federal supervision requirement has been the only obstacle to independent practice, and that otherwise nurse anesthetists are licensed and trained to practice independently. One CRNA stated he did not agree with the contention that educational differences between CRNAs and anesthesiologists are sufficient reasons to place practice restrictions on CRNAs.

Response: Education and training requirements for CRNAs vary among the States. Decisions about appropriate and necessary education and training for health professionals are made by States and educational institutions in compliance with education accreditation standards. Professional schools, both medical and nursing, are accredited by educational organizations with specific standards for curriculum content. Evidence of graduation from an accredited school is part of a State's licensing and certification requirements, independent of Federal regulation. Anesthesia administration by nurse anesthetists has a long history in this country, including a level of independent practice in Department of Defense hospitals. We cannot agree that anesthesia administration is the practice of medicine and therefore can only be done after medical school training. Moreover, the rule does not allow any provider to practice outside the parameters of his or her professional license.

We also believe that this rule is consistent with both sides of this argument as reflected in the comments. The added flexibility and shared responsibility allows each health professional to practice within his/her licensed scope of practice without an across-the-board Federal requirement limiting any collaborative, team or independent practice.

Comment: Additional commenters claimed significant variation among program requirements in nurse anesthetist training. Some of these commenters cited an article from the June 1996 Journal of the American Association of Nurse Anesthetists, identifying that more than one-third (37 percent) of nurse anesthetists do not have bachelor's degrees, less than a quarter (22 percent) have a master's degree, and less than 1 percent have a Ph.D. In comparison, the writers note, all anesthesiologists have an undergraduate degree, 4 years of medical school and specialty training in anesthesiology.

Response: We recognize that education and training requirements vary among the States. As previously noted, States are well skilled at deciding requirements related to health care professional licensing. Our change in the hospital rule deferring to State oversight is not an endorsement of one health professional over another. It is not a rule that defines medical or nursing standards of practice or educational preparation. The rule merely allows the authority (that is, States) whose traditional role it is to make such determinations (for example, which health care professional is trained to provide which health care services) to do so in the case of anesthesia administration.

Comment: There was some concern expressed that eliminating the Federal requirement for supervision would result in decreased physician involvement in the training of CRNAs. One commenter speculated that this provision would reduce the incentive for a physician to specialize in anesthesiology and physician-administered anesthesia would soon vanish.

Response: We disagree that eliminating the Federal supervision requirement will necessarily lead to physicians making decisions about practice specialties, other than anesthesiology. This rule change is not a judgment about the value or contribution of one health professional or another. We believe that with greater staffing flexibility, opportunities for collaboration between physicians and nurse anesthetists will increase based on individual patient needs, hospital characteristics, and an increasing ability to implement best practice protocols.

Comment: A few commenters thought that eliminating supervision by the anesthesiologist will limit the choice of anesthesia modalities and deprive patients of an appropriate anesthesia plan. These commenters stated that CRNAs are not trained in various types of nerve blocks and/or the use of certain devices. These additional skills are necessary to care for critically ill patients.

Response: This change in regulatory approach does not permit any licensed independent health care provider to practice beyond his or her licensed scope of practice. While we acknowledge there will continue to be medical interventions or treatments that fall under the practice authority of a medical licensee, these determinations are not, and never have been, made by Federal regulation, but by States, with

input from, and consultation with, licensed health professionals. Typically these decisions on practice issues fall to provider credentialing, licensing or certification authorities. All areas of health care are constantly faced with implementing new technologies, procedures, drugs, biologicals, or devices. As these new techniques become available we believe it is the responsibility of States, hospitals, and professional organizations to implement standards for training and assuring practice competency. In addition, we have no evidence to indicate that eliminating the Federal supervision requirement for CRNAs will limit the choice of anesthetic modalities or deprive patients of appropriate anesthesia plans.

Comment: There were a few comments stating that the evolution of non-physician practitioners is expanding through the use of well-trained and very capable professionals. Advanced practice nurses represent part of the movement to broaden access, increase efficiency and maintain health care quality. One commenter applauded our efforts to eliminate restrictions preventing full utilization of these highly trained and qualified health professionals.

Others wrote in with concerns that this rule was opening the door to allowing other independent health professionals to engage in unsupervised practice in hospitals and through other providers regulated by us. Some of these commenters pointed to increasing activity at the State level to expand scope-of-practice laws for nonphysicians. Examples, such as psychologists seeking prescribing authority and complementary and alternative medicine practitioners lobbying to expand their professional practice rights, have been used to argue that lesser-trained professionals are attempting to practice medicine without the appropriate training or supervision. They point out that these are more examples of loosening regulatory safeguards over the practice of medicine and patient care.

Response: States have an excellent track record of protecting patient health through their own regulations. We respect State control and oversight of health professionals by deferring to State licensing laws to regulate professional practice. We have determined that there is no need for continuing Federal preemption of State laws by maintaining a requirement for physician supervision of CRNAs as a special case. There is no evidence that States are any less concerned with ensuring safety and quality than the Federal government, especially when it comes to the health and safety of their citizens. In fact, our evidence-based, outcome-oriented standards establish a shared commitment between us, the States, and Medicare providers to ensure safe, quality anesthesia administration. States have a good track record in determining best practices. In fact, it is at the State level where most direct input by health professionals into scope-of-practice licensing laws takes place.

Additionally, we believe that independently licensed health professionals have served a valuable role in expanding access to, and maintaining quality in, many health services. The change in the Federal requirement for physician supervision is not an endorsement of any health profession, model of care delivery, or promotion of a specific standard of care. It is a change in approach to regulatory oversight that recognizes the worth of State control in meeting regional/local needs.

Operating Surgeon Providing Physician Oversight

Previous regulation required physician supervision by either an anesthesiologist or the operating surgeon. We received many comments from surgeons asking about the surgeon's liability as well as questions about who would be considered in charge of the patient's care.

Comment: One surgeon noted that he is dependent on the anesthesiologist as a consultant to provide care and recommendations concerning his patient. Other surgeons did not want responsibility for the anesthesia care of their patients when they were not trained in anesthesia. One commenter stated ''surgical residency programs have intensified training in surgical technical skills, and decreased emphasis on anesthesiology training, leaving such matters to the consultant in Anesthesiology. As a result, [the surgeon's] ability to supervise the CRNA has declined.'' This commenter asserted this should encourage us to require CRNA supervision by an anesthesiologist only. One anesthesiologist asked whether he would be responsible for anesthesia management done prior to his consultation.

Response: This final rule does not require supervision, direction, or oversight of any independently licensed practitioner administering anesthesia by the operating surgeon. The surgeon would still be able to involve an anesthesiologist as a consultant or in any other capacity. This rule does nothing to restrict that relationship. CRNAs, as well as anesthesiologists, are accountable for their own practices, the care they deliver, patient outcomes, as well as insurance liability coverage.

Comment: A few commenters stated there will be increasing pressure on surgeons, from hospitals, CAHs, and ASCs, to eliminate the anesthesiologist. Another commenter wrote that he believes if we allowed this change, it would not be long before private insurers would refuse to pay physicians no matter how sick the patient or complex the procedure.

Response: This rule governs participation requirements for hospitals, CAH, and ASCs participating in the Medicare program. It does not eliminate, restrict, or in any way limit the practice of any practitioner. In addition, an insurance company cannot establish health professional practice rules that are in conflict with State licensing laws.

Comment: We received several comments asserting the physician supervision requirement was responsible for surgeons choosing not to practice in some settings because they do not want the liability associated with the supervision responsibility. One commenter noted that one possible result of lifting the Federal supervision requirement is that more surgeons may be willing to practice in geographical areas they previously would have avoided partially because they did not want to be responsible for supervising the CRNA. Some believed the rule change will alleviate fears of surgeons who were concerned about taking on increased legal liability. Others noted that removing the supervision requirement afforded greater flexibility for surgeons and hospitals to choose their anesthesia providers without fear of increased liability.

Response: The rule makes no legal change in the scope of malpractice liability, traditionally a State issue. Our rule, permitting any State licensed health professional permitted by the State to administer anesthesia would not definitively affect any provider or professional the same way in all States. Because both scope-of-practice and malpractice liability differs from state to state, as a general matter, any professional who has contact with the patient could conceivably be held liable for personal injury, depending on the facts and circumstances of the case and on the State's laws. This issue is not the subject of this rulemaking.

Rural Issues

Comment: We had many comments on this provision relative to the practice of nurse anesthetists in rural areas. Even

many physicians supported the changed supervision requirement in rural areas where access to anesthesiologists is limited. Some comments from surgeons practicing in small communities noted they have worked solely with CRNAs for all procedures, and they never felt they had a need for any additional supervision, regardless of the medical situation. They further point out that without nurse anesthetists willing to practice in medically underserved areas, no one would be available to administer anesthesia.

However, other physician commenters noted that under current regulation, even without a supervising anesthesiologist, the operating surgeon provides supervision to the nurse anesthetist. One commenter noted, ''the administration of anesthetics by nurse anesthetists in rural communities of this country is a condition of necessity, not design, since these areas are generally underserved by physicians.'' The commenter disagrees with proposing a national standard based on these criteria.

Response: The intent of this rule is not to limit or prohibit any anesthesia care model. We are changing a thirty year old policy to more accurately reflect demands of current practice, variations in hospital, CAH or ASC, patient characteristics, resource management, technology, and ever-increasing medical knowledge. We concur with the experience of the commenters who state that nurse anesthetists have increased access to anesthesia care, and thereby, access to medical and surgical procedures that would likely be unavailable if not for a practitioner qualified to administer anesthesia. We disagree, however, that the new rule, by itself, will guarantee an adequate supply of CRNAs in rural settings. A patient population's medical or surgical needs; hospital, CAH, or ASC characteristics; State practice laws, etc. are all factors contributing to decisions of CRNAs about where to practice. These variables exist in rural as well as other geographic areas.

Comment: A few commenters believed we were erroneous in our assumption that allowing independent practice of CRNAs would increase access to needed medical procedures in rural areas. One commenter asserted we were wrong in our assumption that there is a problem of access to care in rural areas. CRNA commenters noted that CRNAs administer anesthesia unsupervised by an anesthesiologist in approximately 70 percent of rural hospitals within the United States, providing a full range of anesthetic services (for example, surgical, obstetrical, and trauma stabilization).

Response: Without CRNA availability in certain areas there would be limits on the types of surgical interventions or procedures that could be performed in those areas, because no anesthesia professionals other than CRNAs would be available.

Comment: Several people asked that we create a rural carve-out for CRNA independent practice. Some of these commenters agreed with keeping the requirement for operating physician supervision, while others supported full independent practice. Still others, even though in agreement with a rural carve-out, wanted us to create a requirement for supervision by an anesthesiologist wherever there were no shortages of this physician specialty. Additionally, these commenters wanted assurance that patient care outcomes would continue to be monitored so that all patients would be receiving the care they deserve.

Response: The purpose of the change in the requirement is not simply to respond to the needs of physician shortage areas. We gave full consideration to this option but decided that the importance of increased flexibility, decreased burden, and broadened implementation of best practice protocols were important for hospitals in all geographic settings. We believe there is no reason for an across-the-board Federal requirement that could potentially limit development of new practice models of anesthesia delivery, or interfere with progress in promoting practices that improve patient outcomes.

There are additional mechanisms in place to support monitoring of patient outcomes. There are other hospital standards and oversight activities that address how care is delivered and identify mechanisms hospitals must have in place to assure patients receive safe, quality care.

Comment: One commenter stated that by expanding CRNA independent practice outside of rural areas, increased competition would occur with anesthesiologists for jobs in better served areas and would result in CRNAs choosing not to locate in less desirable and under-served areas. This commenter supported a rural carve-out for fear that without such a carve-out, these underserved areas would again experience access problems. Another commenter mistakenly believed that requiring physician supervision would result in CRNAs working without payment, leading small community operating rooms to close.

Response: CRNAs are paid under the CRNA fee schedule. The CRNA may furnish the service under the ''medical direction'' of a physician, usually the anesthesiologist, or the CRNA may furnish the entire anesthesia service without medical direction, while still under the supervision of the operating surgeon. Payment rules for CRNAs, as well as for physician anesthesiologists, do not change as a result of this rule.

This issue of health professional shortage has always been present but there is no way to predict that this will be a definite outcome of the rule change. The Congress, the Department of Health and Human Services, and the States continue to address the issue of health professional shortages through a variety of mechanisms, including increasing educational grants and loans for those who choose to practice in designated critical shortage areas.

Pre- and Post-Anesthesia Evaluations

Comment: Several writers cited the importance of the pre-anesthesia evaluation as critical to prevention of complication during and after a procedure. Many of these commenters felt that only a physician with detailed knowledge of medicine has the ability to make a reasoned, informed judgment about the medical state of a patient. Other commenters noted that in addition to the pre-anesthetic evaluation, all peri-operative assessment and care requires physician oversight. One commenter pointed out that anesthesia complications might be a result of several factors, including inadequate pre-anesthetic preparation, severity of concurrent disease, inappropriate monitoring and lack of post-anesthetic follow-up care. Another commenter stated this process is more accurately described as ''pre-procedure assessment'', indicating the importance of thorough consideration of the patient's medical needs.

Response: We agree with commenters that a variety of factors and contributing variables influence surgical and anesthesia outcomes. Our literature review and analyses of comments confirms our conclusion that interactions among and between these variables are difficult to isolate in terms of their individual effects on outcomes. Education and training programs for CRNAs include pre- and post-anesthesia care. Pre- and post-anesthesia assessment and monitoring are scope-of-practice issues determined by each State as it considers education and training requirements for professional licensing.

We are sensitive to the debate between physician anesthesiologists and nurse anesthetists regarding what

constitutes the practice of medicine with regard to anesthesia administration. States have handled these issues through laws and health professional practice acts. Questions of who is properly trained to do a pre-anesthesia evaluation, care for a patient in recovery, order pain medication, or perform a procedure that results in conscious sedation of a patient, have all faced States when they adopted professional licensing laws. This rule change does not prohibit collaboration between medical professionals including surgeons, nurse anesthetists, and/or anesthesiologists in the total care and treatment of any patient in the hospital. As expanded scope-of-practice issues are debated at the State level, we expect continued involvement by medical and health professionals to ensure best practices and protocols are incorporated in final decisions about which professionals meet the required training and education to perform any particular service.

Collaboration and Anesthesia Team Approach

Comment: Several commenters explained that this rule would not significantly change the manner in which CRNAs currently work. One commenter noted that ''anesthesia always has been and always will be given only as an adjunct to a surgical or diagnostic procedure. Collaboration must occur with the primary physician no matter if the anesthesia is provided by a physician anesthesiologist or a nurse anesthetist.'' Other commenters reaffirmed this by pointing out that collaboration is intrinsic to the practice of anesthesia administration, and therefore an explicit requirement of supervision is at best unnecessary. Others brought to our attention that State laws that require supervision vary in their definitions and in many cases define supervision as collaboration rather than direction.

Several anesthesiologists commented in support of the collaborative, team approach to anesthesia delivery. Commenters stressed the valuable and knowledgeable assets CRNAs are to the anesthesia team. These commenters expressed some concern that the rule will destroy the longstanding concept of the anesthesia care team, making it less likely hospitals will take advantage of the skills of the nurse anesthetist and the medical training of the anesthesiologist.

Response: As we have said, this rule makes no judgment in support of one model of care over another. In addition, the rule does not prohibit collaboration or teamwork during anesthesia administration. We believe the rule will promote best practices and encourage professional collaboration, in an effort to improve anesthesia care delivery and patient outcomes. We are pleased with the comments in recognition of the valuable contribution made by both professionals to the care of patients during anesthesia administration.

Comment: One commenter wrote that in most settings patient care is a team effort, and the current supervision requirement encourages polarization rather than collaboration. This commenter noted that when CRNAs have problems or questions about patient care they seek consultation with colleagues. Other commenters stated that the removal of the requirement provides surgeons, medical physicians, and others who perform diagnostic or surgical procedures freedom to collaborate or choose the anesthesia provider best suited to the procedure and the patient's needs. Additionally, many who supported the change in the rule believe that only a few CRNAs in certain circumstances would want to practice without supervision. They felt that both nurses and anesthesiologists preferred a team model of practice.

Two commenters stated that dentists, some physicians, and podiatrists work in settings where collaboration with an independent nurse anesthetist better suits the needs of the patient. They particularly noted the practice by nurse anesthetists of staying with patients for the entire duration of the procedure and through discharge from surgery as being helpful.

Similarly, we had several physicians state that the average healthy person can be safely managed by a CRNA. However, they contend a person with multiple medical problems or those undergoing complex or high-risk surgery should have a physician evaluation and medical direction during his or her care. The commenters believed that with this type of distinction in care, both parties would work together to deliver high quality anesthesia.

Response: One of the limits to requiring an overarching, across the board Federal requirement for supervision is the problem it creates for providers to tailor care to the needs of patients. These comments reaffirm what we have previously noted about the wide variability in patient presentations (for example, medical factors, type and nature of procedure, age, health, etc.) and how these variables influence clinical decisions about anesthesia administration. This rule change removes these unnecessary restrictions.

Cost to the Medicare Program

Comment: We received many comments on the financial motivations of various types of professionals for taking a position on one side of this issue or another. Many of the 20,000 comments accused one professional group or another of lacking concern for safety or adding additional burden to the health care delivery system for the sole purpose of financial gain or practice monopoly. We also received comments asserting that our motivation was to save money payable through the Medicare and Medicaid programs at the cost of quality anesthesia services. Those who support the change note that it removes a financial disincentive to use nurse anesthetists by no longer requiring payment to two professionals. They feel nurse anesthetist will be more efficient and expand a hospital's ability to provide services to more patients.

Many nurse anesthetists report having full responsibility for administering an anesthetic and caring for a patient while the anesthesiologist is somewhere else in the surgical area having no interaction with the patient. They note CRNAs are able to provide the same quality service at a lower cost, without the additional fee to an anesthesiologist for providing supervision. One commenter expressed support for the change as one that will greatly facilitate the use of cost-effective, outcome-based providers, noting ''Unnecessarily mandated layers of supervision ultimately add cost to care, and yet have never documented any benefits.'' Many commenters wrote us with specific examples of how Medicare charges and costs would decrease as a result of the rule.

There was a common misunderstanding among many commenters that this change meant that Medicare patients would be forced to receive a lesser level of care because the rule changed the reimbursement for Medicare patients. One commenter asked, ''Why would HCFA institute payment procedures that decrease the level of care provided to Medicare and Medicaid patients in the name of flexibility?'' Another stated this rule proposes a double standard in that Medicare and Medicaid patients would not have the benefit of a physician's expertise to ensure their safety during critical peri-operative time.

Response: This rule does not change the payment policies for anesthesia services. Medicare payment rules remain the same. CFR section 415.110(a) requires that the anesthesiologist perform specific activities for each patient in order to be paid for providing

''medical direction.'' It must be emphasized that the ''medical direction'' rules are rules for payment of the physician's service under the physician fee schedule. The physician fee schedule payment per service is related to the amount of physician work associated with the service. Thus, the medical direction requirement must establish some level of physician work that is reasonable in relation to the allowance recognized for the service. The ''supervision'' of the CRNA by a physician, usually the operating surgeon, is not a separately payable service for the surgeon. The payment for this service is considered a part of the global surgical fee paid to the surgeon.

Because this rule does not affect payment , the determination about supervision is not specific to a Medicare beneficiary. These rules apply to all patients receiving anesthesia services in Medicare participating hospitals, CAHs, and ASCs, thus Medicare patients would not receive a different level of care from non-Medicare patients and therefore, does not mean different care for Medicare or Medicaid patients. The rule is specific to the provision of anesthesia services in a Medicare participating hospital, CAH, or ASC, and applies to all patients.

Comment: Several commenters who opposed this provision warned that costs to the Medicare program will increase as a result of this rule. Many believed that, although there will be no immediate effect since payment remains the same, costs would increase in the long term because of resulting anesthetic complications and malpractice. Others told us they believe anesthesiologist consultations will increase because some of these services are included in the anesthesia administration fee but as consultants, anesthesiologists would have to charge separately for these services.

Response: Neither costs to the Medicare program nor payment to different professionals was part of the decision to change the hospital CoP for anesthesia services. The fears of long term negative outcomes, increasing medical complications and higher malpractice insurance premiums, related to professional type, are unwarranted, based on our review of the literature. This rule will not prohibit consultation, physician supervision, or anesthesiologist administration of anesthesia where State and/or hospital by-laws require it. Whether payment can be made for consultations will be determined by the usual physician coverage and payment rules.

General

Comment: We received many anecdotal comments from beneficiaries, describing both positive and negative experiences during anesthesia, such as, the importance of a caring, well-trained professional who gives the needed patient attention, and answers the patient's questions. Rarely did the comments identify the professional by credentials.

Response: These reports are important in that they confirm our commitment to patient-centered, outcome-oriented approaches to regulating Medicare participating providers.

Comment: Several certified anesthesiology assistants (AAs) expressed concerns about how the rule might affect their practice. Since the rule allows anesthesia to be administered only by a person licensed by the State to do so, they question whether this requirement would prohibit their practice. Some of the AAs recommended that we omit the term licensed and allow States to determine whether licensure is required at all to practice anesthesia.

Response: We do not agree with the comments that no State licensure should be required for anesthesia health professional practice. As noted, this rule defers to State scope-of-practice laws which identify health professionals that are allowed to administer anesthesia. Under this rule, AA s would be allowed to practice within their scope-of-practice specified by State law.

Comment: One commenter recommended that we require a CRNA to disclose that a nurse, not a doctor, would be providing anesthesia care and that if the patient desired to choose another provider his or her request would be honored. Other commenters stated that this rule is being promulgated without adequate input from patient advocate groups and without regard to how it might affect patient care. They believe that this rule serves special interests and that patient interests have not been adequately considered.

Response: The request for an anesthesia provider is usually made by the surgeon or physician in charge of the patient's care. We believe the flexibility allowed through this rule change will enable physicians to make the best and most suitable choice for their patient's characteristics, medical and anesthesia needs. Patients are always free to ask about the qualifications of any practitioner providing care, including doctors, nurses, therapists, surgeons, or anesthetists.

We received comments regarding this proposal from patient advocates and individual Medicare and Medicaid beneficiaries as well as providers on both sides of the issue. We agree that safety and quality patient outcomes should be the principal consideration in regulating providers. It is exactly this focus which has led to the regulatory change in supervision of CRNAs.

Comment: Several commenters pointed to other ways in which the Federal government supported nurse anesthetists, citing, as examples, Federal funds under Title VIII of the Public Health Service Act and Medicare Education Funds. One commenter wrote that nurse anesthetists received approximately $2.7 million dollars per year for student trainees, faculty fellowships, and new program startup money.

Response: As previously noted, this rule is not intended to endorse one health care professional over another. It is intended to recognize the value in flexibility for providers when making decisions about how to best manage resources to ensure access to quality health services.

Comment: We received a few comments from nurse anesthetists who believed that implementation of this rule would be easy in those parts of the country where CRNAs have practiced and are treated with respect. Some of these commenters identified difficulty in achieving professional courtesy and referrals from doctors who did not recognize their skills and abilities.

Response: To the extent that this rule provides opportunity for greater flexibility for providers and increased access to quality health care for patients, we hope that this will occur. It is not our goal in this rule to prescribe, or to limit, which health care professionals may collaborate, supervise or work independently. We do, however, hope to decrease barriers to access, increase efficiency, and encourage improved models of safe anesthesia delivery. We believe that is best accomplished by sharing the responsibility with States and providers.

III. Provisions of the Final Regulations

We are amending § 482.52(a)(4) of the current hospital CoPs and § 485.639(c)(1)(v) of the current critical access hospitals CoPs, to codify requirements for who may administer anesthesia under Subpart D—Standard: Anesthesia Services. This change is also reflected in a conforming amendment to the ASC Conditions of coverage at § 416.42(b)(2). This final regulation eliminates a Federal requirement for physician supervision and defers to

States the determination of which licensed practitioners are allowed to administer anesthesia.

IV. Collection of Information Requirements

This document does not impose information collection and record keeping requirements. Consequently, it need not be reviewed by the Office of Management and Budget under the authority of the Paperwork Reduction Act of 1995.

V. Regulatory Impact Statement

A. Overall Impact

We have examined the impacts of this rule as required by Executive Order 12866 and the Regulatory Flexibility Act (RFA) (Public Law 96–354). Executive Order 12866 directs agencies to assess all costs and benefits of available regulatory alternatives and, if regulation is necessary, to select regulatory approaches that maximize net benefits (including potential economic, environmental, public health and safety effects, distributive impacts, and equity). A regulatory impact analysis (RIA) must be prepared for major rules with economically significant effects ($100 million or more annually). This rule is not considered to have a significant economic impact on hospitals and, therefore, is not considered a major rule. There are no requirements for hospitals to initiate new processes of care, reporting, or to increase the amount of time spent on providing or documenting patient care services. This final rule will provide hospitals with more flexibility in how they provide quality anesthesia services, and encourage implementation of the best practice protocols.

The RFA requires agencies to analyze options for regulatory relief of small businesses. For purposes of the RFA, small entities include small businesses, nonprofit organizations and government agencies. Most hospitals and most other providers and suppliers are small entities, either by nonprofit status or by having revenues of $5 million or less annually. For purposes of the RFA, all non-profit hospitals, and other hospitals with revenues of $5 million or less annually are considered to be small entities. Some critical access hospitals and some ASCs with revenues of $5 million or less annually are also considered to be small entities. Individuals and States are not included in the definition of small entities.

In addition, section 1102(b) of the Act requires us to prepare a regulatory impact analysis if a rule may have a significant impact on the operations of a substantial number of small rural hospitals. This analysis must conform to the provisions of section 604 of the RFA. For purposes of section 1102(b) of the Act, we define a small rural hospital as a hospital that is located outside of a Metropolitan Statistical Area and has fewer than 50 beds.

Section 202 of the Unfunded Mandates Reform Act of 1995 also requires that agencies assess anticipated costs and benefits before issuing any rule that may result in an expenditure in any one year by State, local, or tribal governments, in the aggregate, or by the private sector, of $100 million. This rule places no additional cost requirements for implementation on the governments mentioned. It will allow CRNAs to practice without physician supervision where State law permits or to be supervised by a physician where such oversight is required by State law. This change is consistent with our policy of respecting State control and oversight of health care professions by deferring to State licensing laws to regulate professional practice. Executive Order 13132 establishes certain requirements that an agency must meet when it promulgates a proposed rule (and subsequent final rule) that imposes substantial direct compliance costs on State and local governments, preempts State law, or otherwise has Federalism implications. This final rule imposes no direct compliance costs on State or local governments.

B. Anticipated Effects

1. Medicare and Medicaid participating hospitals, CAHs, and Ambulatory Surgical Centers will defer to State licensing laws in determining which health professionals are permitted to administer anesthesia. In addition, these facilities are free to exercise stricter standards than required by State law.

2. First, it must be noted that this final rule does not change the Medicare payment policies for anesthesia services. There is an important payment distinction between the medical ''direction'' requirements and the physician ''supervision'' requirement. Payment made by Medicare on a fee schedule basis is not payment for ''supervision'' but rather payment for ''direction'' and the payment per service is related to the amount of physician work associated with the service.

Second, economic effects on individual health professionals as a result of this rule change will be influenced by other factors. Because the final rule defers to State licensing laws, the impact on either physician or CRNA income from billed services will be determined by each States' laws. State laws vary widely in both the definition and degree of physician supervision and oversight required of CRNAs. In addition, some State laws leave the determination up to individual hospital, CAH, or ASC medical staff by-laws, resulting in a financial impact that is different depending on where the physician or CRNA provides the services. In any of these situations the potential impact might include an increase or decrease in billed services by CRNAs practicing alone, in billed services by physicians practicing alone, in billed services by physicians providing medical direction in collaboration with CRNAs, as well as the possibility of no change in billed services by either provider. In some of these cases, where there is decreased physician billing, there may be increased savings to third party payers.

Finally, the flexibility resulting from the rule change could provide increased access to services in some areas, and broaden opportunity for providers to implement professional standards of practice that improve quality and promote more efficacious models of care delivery.

3. This rule increases flexibility in the provision of anesthesia services for Medicare and Medicaid hospitals, CAHs, and ASCs. It removes the burden of implementing a Federal requirement for physician supervision of CRNAs in all cases. The rule change will allow hospitals, CAHs, and ASCs the flexibility, within the authority of State licensing laws, to implement best-practice protocols in providing anesthesia services most associated with positive patient outcomes. Moreover, hospitals are free to exercise stricter practice standards. As discussed in the preamble of the December 19, 1997 proposed rule, this provision does not lend itself to a quantitative impact estimate, and we do not anticipate a substantial economic impact either in costs or savings.

C. Conclusion

We are changing the current across-the-board Federal requirement for physician supervision of CRNAs to allow State control and oversight through professional licensing laws. This change applies to all Medicare and Medicaid participating hospitals, CAHs, and ASCs. Our decision to change the Federal requirement for supervision of CRNAs applicable in all situations is, in part, the result of our review of the scientific literature which shows no overarching need for a Federal regulation mandating any model of anesthesia practice, or limiting the

practice of any licensed professional. The clinical evidence indicates anesthesia outcomes have improved substantially in recent years such that anesthesia is a relatively safe procedure. Both our literature review and comment analysis made clear that there is such a range of variables and influences to be considered (for example, patient types, surgical procedure, and/or availability of technology) that a single Federal requirement applicable in all situations is unnecessary and may actually interfere with factors that promote quality patient outcomes.

For these reasons, we are not preparing analyses for either the RFA or section 1102(b) of the Act because we have determined, and we certify, that this rule will not have a significant economic impact on a substantial number of small entities or a significant impact on the operations of a substantial number of small rural hospitals.

In accordance with the provisions of Executive Order 12866, this regulation was reviewed by the Office of Management and Budget.

VI. Federalism

We have reviewed this final rule under the threshold criteria of Executive Order 13132, Federalism. We have determined that it does significantly affect the rights, roles, and responsibilities of States. This final rule removes the Federal guideline that requires CRNAs to be supervised by a physician and allows the laws of the States to determine which practitioners are permitted to administer anesthetics and the level of supervision required.

List of Subjects

42 CFR Part 416

Health facilities, Kidney diseases, Medicare, Reporting and recordkeeping requirements.

42 CFR Part 482

Grant programs-health, Hospitals, Medicaid, Medicare, Reporting and recordkeeping requirements.

42 CFR Part 485

Grant programs-health, Health facilities, Medicaid, Medicare, Reporting and recordkeeping requirements.

For the reasons set forth in the preamble, 42 CFR Chapter IV is amended as set forth below:

PART 416—AMBULATORY SURGICAL SERVICES

1. The authority citation for Part 416 continues to read as follows:

Authority: Secs. 1102 and 1871 of the Social Security Act (42 U.S.C. 1302 and 1395hh).

Subpart C—Specific Conditions for Coverage

2. Section 416.42 is amended by revising paragraph (b) to read as follows:

§ 416.42 Condition for coverage—surgical services.

* * * * *

(b) *Standard: Administration of anesthesia.* Anesthesia must be administered by a licensed practitioner permitted by the State to administer anesthetics.

* * * * *

PART 482—CONDITIONS OF PARTICIPATION FOR HOSPITALS

3. The authority citation for part 482 continues to read as follows:

Authority: Secs. 1102 and 1871 of the Social Security Act (42 U.S.C. 1302 and 1395hh), unless otherwise noted.

Subpart D—Optional Hospital Services

4. Section 482.52 is amended by revising paragraph (a) to read as follows:

§ 482.52 Condition of participation: anesthesia services.

* * * * *

(a) *Standard: Staffing.* The organization of anesthesia services must be appropriate to the scope of the services offered. Anesthesia must be administered by only a licensed practitioner permitted by the State to administer anesthetics.

* * * * *

PART 485—CONDITIONS OF PARTICIPATION: SPECIALIZED PROVIDERS

5. The authority citation for Part 485 continues to read as follows:

Authority: Secs. 1102 and 1871 of the Social Security Act (42 U.S.C. 1302 and 1395 (hh)).

Subpart F—Critical Access Hospitals (CAHs)

6. Section 485.639 is amended by revising paragraph (c) to read as follows:

§ 485.639 Condition of participation-surgical services.

* * * * *

(c) *Administration of anesthesia.* The CAH designates the person who is allowed to administer anesthesia to CAH patients in accordance with its approved policies and procedures and with State scope of practice laws. Anesthesia is administered only by a licensed practitioner permitted by the State to administer anesthetics.

* * * * *

(Catalog of Federal Domestic Assistance Program No. 93.778, Medical Assistance Program)

(Catalog of Federal Domestic Assistance Program No. 93.773, Medicare—Hospital Insurance; and Program No. 93.774, Medicare—Supplementary Medical Insurance Program)

Dated: January 5, 2001.

Robert A. Berenson,

Administrator, Health Care Financing Administration.

Approved: January 10, 2001.

Donna E. Shalala,

Secretary.

Note: This list of references will not appear in the Code of Federal Regulations.

References

Abenstein, J.P., & Warner, M.A. (1996). Anesthesia providers, patient outcomes, and costs. *Anesth. Analg.* 62. 1273–1283.

Chassin, Mark R. Is Health Care Ready for Six Sigma Quality? *Milbank Quarterly* 764:565–591, 1998

Kohn, L.T., Corrigan, J., and Donaldson, M., To Err is Human. *Institute of Medicine.* National Academy Press, Washington, DC 1999

Lagasse, R.S., Steinberg, E.S., Katz, R.I., & Saubermann, A.J. (1995). Defining quality of perioperative care by statistical process control of adverse outcomes. *Anesthesiology,* 82, 1181–1188

Silber, J.H., Williams, S.V., Krakauer, H., & Schwartz, S.(1992). Hospital and patient characteristics associated with death after surgery: a study of adverse occurrence and failure to rescue. *Medical Care,* 30, 615–627

Silber, J.H., Rosenbaum, P.R., & Ross, R.N. (1995). Comparing the contributions of groups of predictors: which outcomes vary with hospital rather than patient characteristics? *Journal of the American Statistical Association,* 90 (429): 7–18

Silber, J.H., Rosenbaum, P.R., Williams, S.V., Ross, R.N., & Schwartz, J.S. (1997). The relationship between choice of outcome measure and hospital rank in general surgical procedures: implications for quality assessment. *International Journal for Quality in Health Care,* 9(3): 193–200

Silber, J.H., Kennedy, S.K., Koziol, L.F., Showan, A.M., & Longnecker, D.E. (1998). Do nurse anesthetists need medical direction by anesthesiologists? *Anesthesiology,* 89: A1184

Silber, J.H., Kennedy, S.K., Even-Shoahan, O., Chen, W., Koziol, L.F., Showan, A.M., & Longnecker, D.E. (2000). Do nurse anesthetists need medical direction by anesthesiologists? *Anesthesiology,* 93 (1): 152–163

[FR Doc. 01–1388 Filed 1–17–01; 8:45 am]

BILLING CODE 4120–01–P

Proposed Rules

Federal Register

Vol. 66, No. 12

Thursday, January 18, 2001

This section of the FEDERAL REGISTER contains notices to the public of the proposed issuance of rules and regulations. The purpose of these notices is to give interested persons an opportunity to participate in the rule making prior to the adoption of the final rules.

DEPARTMENT OF HEALTH AND HUMAN SERVICES

Food and Drug Administration

21 CFR Parts 20, 312, and 601

[Docket No. 00N–0989]

Availability for Public Disclosure and Submission to FDA for Public Disclosure of Certain Data and Information Related to Human Gene Therapy or Xenotransplantation

AGENCY: Food and Drug Administration, HHS.

ACTION: Proposed rule.

SUMMARY: The Food and Drug Administration (FDA) is proposing to amend the biologics licensing regulations regarding confidentiality of information. The amendments would add provisions that would make available for public disclosure, and require submission for public disclosure of, certain data and information related to human gene therapy or xenotransplantation. The proposed regulation would apply specifically to the areas of human gene therapy and xenotransplantation because these areas of clinical research have the potential for unique public health risks and modification of the human genome. The proposed rule would provide for public disclosure of certain data and information related to an investigational new drug application (IND), to provide an opportunity for public education on, and discussion and consideration of, public health and safety issues. In addition, the proposed rule would require sponsors of clinical trials on human gene therapy or xenotransplantation to submit to FDA for public disclosure certain data and information that has been redacted to remove or obscure all information defined as confidential commercial or trade secret, or names and other personal identifiers of patients and certain other third parties.

DATES: Submit written comments on this proposed rule on or before April 18, 2001. Submit written comments on the information collection provisions by February 20, 2001.

ADDRESSES: Submit written comments on this proposed rule to the Dockets Management Branch (HFA–305), Food and Drug Administration, 5630 Fishers Lane, rm. 1061, Rockville, MD 20852. Submit written comments on the information collection requirements to Wendy Taylor, FDA Desk Officer, Office of Information and Regulatory Affairs, Office of Management and Budget (OMB), New Executive Office Building, 725 17th St. NW., Washington, DC 20503, Attn: Desk Officer for FDA.

FOR FURTHER INFORMATION CONTACT: Steven F. Falter, Center for Biologics Evaluation and Research (HFM–17), Food and Drug Administration, 1401 Rockville Pike, suite 200N, Rockville, MD 20852–1448, 301–827–6210.

SUPPLEMENTARY INFORMATION:

I. Background Information

A. Current FDA Policies Regarding Disclosure of Information

FDA regulations in part 312 (21 CFR part 312) provide procedures that govern the use of investigational new drugs, including new biological drugs, in humans. Under part 312, the sponsor of a clinical study in humans must submit to FDA an IND which provides specific information regarding the investigational new drug and the clinical study. The IND must be authorized by FDA and approved by the local institutional review board (IRB) before the clinical study may begin. The provisions of this rulemaking do not alter the procedures specified in part 312 for submission of an IND. A manufacturer requesting approval to market a biological product in interstate commerce must submit a biologics license application (BLA) to FDA before the product may be introduced into interstate commerce (42 U.S.C. 262). Among other things, the BLA contains information and data resulting from the clinical studies performed under an IND (§ 601.2 (21 CFR 601.2(a))). All information and data concerning the product, including those submitted in applicable IND's and in the BLA, are held by FDA in a biological product file (see definition of ''biological product file'' in § 601.51(a) (21 CFR 601.51(a)) throughout the lifetime of the product.

The general requirements related to disclosure of information for all types of commodities regulated by FDA and for all types of documents are provided in part 20 (21 CFR part 20). Under these regulations, certain categories of information are exempt from mandatory disclosure. The categories of information relevant to human gene therapy and xenotransplantation clinical trials that have historically been exempt from public disclosure include trade secrets and commercial or financial information which is privileged or confidential (§ 20.61); personnel, medical, and similar files, the disclosure of which constitutes a clearly unwarranted invasion of personal privacy (§ 20.63); and at the discretion of FDA, interagency or intra-agency memoranda or letters, except for factual information which is reasonably segregable (§ 20.62).

Specific requirements for the availability for public disclosure of data and information in an IND, including those IND's relating to biological drug products, are included in § 312.130. FDA's policy for the confidentiality of data and information contained in an IND for a biological product and in a biological product file is provided in §§ 601.50 and 601.51 (21 CFR 601.50 and 601.51). Under §§ 601.50 and 601.51, and consistent with the other referenced disclosure regulations, FDA has not routinely publicly disclosed any data or information contained in an IND or a pending biological product file. FDA has not even acknowledged the existence of the IND or a pending biologics license application, unless its existence has previously been publicly acknowledged. Because the agency has no mechanism for reliably tracking what information concerning an unapproved, investigational product has been publicly acknowledged, the agency generally provides no information to the public concerning an investigational product, including information concerning any IND or pending BLA submissions, and refers the public to the sponsor of the IND or the pending biological license for further information. In some cases, FDA may publicly disclose selected portions of safety and effectiveness data, such as summary information for consideration at an open session of a Federal advisory

committee meeting, or other public workshops or meetings (§ 601.51(d)(1)). Once a biological license has been approved, certain information, as specified in § 601.51(e), concerning the approved product and the clinical investigation of the product may be publicly disclosed.

B. Issues Related to Human Gene Therapy and Xenotransplantation

As a result of rapid advances in molecular biology, genomics, immunology, and transplant biology, new classes of biological therapeutics are being developed with the goal of providing future treatment options for genetic disease, cancer, and organ failure. Novel therapeutic approaches currently under consideration include the areas of human gene therapy and xenotransplantation. Human gene therapy and xenotransplantation are being proposed to treat genetic diseases such as cystic fibrosis, cardiovascular insufficiency, metabolic diseases such as diabetes, neurologic diseases such as Parkinson's and Huntington's disease, cancer, acquired immune deficiency syndrome (AIDS), and organ failure.

1. Definitions

Human gene therapy is defined as the administration of genetic material to modify or manipulate the expression of a gene product or to alter the biological properties of living cells for therapeutic use. Cells may be modified ex vivo for subsequent administration to the subject or altered in vivo by gene therapy products given directly to the subject. Human gene therapy includes, but is not limited to, autologous or allogeneic bone marrow stem cells modified with a viral vector, intramuscular or intravascular injection of a therapeutic plasmid deoxyribonucleic acid (DNA) or a therapeutic viral vector, ribozyme technology, and use of sequence specific oligonucleotides to correct a genetic mutation. For the purposes of this regulation, gene therapy is not intended to include the administration of viral or cellular products (e.g., blood or unmodified bone marrow), or their derivatives, that do not contain genetic material that has been specifically engineered into the product for therapeutic purposes. While prophylactic vaccines, including plasmid DNA vaccines and genetically modified viral vector vaccines, and some replication competent viruses are excluded under this regulation from the gene therapy definition, they are similar in nature to gene therapy products. Issues relevant to gene therapy products, such as vector integration and biodistribution, also apply to prophylactic vaccines. Therefore, the agency requests comment on whether such products should be included under this rulemaking to allow information related to these products to be available for public disclosure.

The use of antisense oligonucleotides to block gene transcription is not intended to be included under gene therapy; however, as noted above, the use of sequence specific oligonucleotides to correct a genetic mutation would be included. The proposed mechanism of action of sequence specific oligonucleotides is to irreversibly change, insert, or delete a single base in the genome of a cell. This raises questions of whether base changes may result in mutations that may cause cancer, or express an immunogenic protein or have other adverse health affects. In addition, their use in vivo raises issues of activity in tissues other than the target and the risk of gonadal biodistribution leading to germ line changes.

Xenotransplantation refers to any procedure that involves the transplantation, implantation, or infusion into a human recipient of either: (1) Live cells, tissues, or organs from a nonhuman animal source; or (2) human body fluids, cells, tissues, or organs that have had ex vivo contact with live nonhuman animal cells, tissues, or organs. The live cells, tissues, or organs used in xenotransplantation are referred to as xenotransplantation products. Xenotransplantation products include those from transgenic or nontransgenic animals, as well as combination products that contain xenotransplantation products in combination with drugs or devices. These include, but are not limited to, porcine fetal neuronal cells, encapsulated porcine islet cells, encapsulated bovine adrenal chromaffin cells, baboon bone marrow, and external liver assist devices employing porcine liver, or porcine hepatocytes. Nonliving biological products or materials from animals, such as porcine heart valves and porcine insulin, are not classified as xenotransplantation products for the purposes of this rulemaking.

2. Public Health Issues

While human gene therapy offers great promise for improving the lives of patients with serious, life-threatening diseases and disorders, there are several risks inherent in its use as a medical intervention. These risks include the inadvertent infection of patients, and potentially their contacts, with replication competent virus present in gene therapy vector preparations. For example, infection with type C murine retroviruses, which could contaminate retroviral vector preparations, is known to cause a range of diseases in animals including spongiform encephalopathy, anemia, and neoplastic disease. In addition, these risks include the risk of infection with novel infectious agents generated by recombination in vivo, the consequences of which are unknown; the risk of insertional mutagenesis through disruption of the normal genetic sequence, resulting in altered gene expression; and the risk of inadvertent modification of the patient's germline and its effect on future offspring.

Although xenotransplantation provides a potential approach to address the shortage of human organs and for treatment of disease, the use of xenotransplantation products raises concerns about possible infection of the recipient and, subsequently, the public at large with both known and as-yet-unrecognized infectious agents. Experience with human allograft transplantation has demonstrated the potential for transmissibility of infections from donor to recipient through transplants (Refs. 1 to 3). The direct contact resulting from implantation of a xenotransplantation product into a recipient, with the associated disruption of anatomical barriers and the immunosuppression of the recipient, may facilitate interspecies transmission of xenogeneic infectious agents. The potential for subsequent transmission of a xenogeneic infectious agent from the recipient to the recipient's close contacts, and propagation through the general human population, is an additional risk and a recognized public health concern.

Insertional mutagenesis is a risk potentially associated with the infection of xenotransplant recipients and their close contacts and the general population with xenogeneic retroviruses. In addition to potential horizontal transmission of infectious agents from the recipient of a xenotransplantation product to the recipient's contacts, there is concern regarding vertical transmission of infectious agents from the recipient to progeny during gestation (e.g., transmission from mother to fetus of infectious agents across the placenta or during parturition). Vertical transmission of xenogeneic infectious agents could result in the development of infectious disease in progeny. In addition, vertical transmission of xenogeneic viruses can result in insertional mutagenesis with disruption of normal human development or integration into the germline resulting in transmission to future generations.

Thus, human gene therapy and xenotransplantation investigative approaches individually pose: (1) Risks that extend beyond the individual (e.g., public health risks, including the potential for the transmission of infectious agents from the recipient to the public at large); and (2) risks of inadvertent modification of the germline (alterations of the genetic material of the progeny). Moreover, these approaches may also be used in combination (e.g., xenotransplantation products genetically modified before implantation), resulting in complex questions and issues for consideration and discussion prior to and during human clinical trials.

3. Public Education and Informed Consent Issues

Human gene therapy and xenotransplantation investigations call for additional mechanisms to provide the public access to clinical trial information relevant to the assessment of risks and benefits, and to informed consent. Special care is needed to ensure that individual subjects understand the experimental nature of the procedures and their known and unknown risks and burdens. Human gene therapy and xenotransplantation require the evaluation of risks to third parties such as health care workers, close contacts of the recipient, and the community. The informed consent process should address the need for long-term surveillance and post-mortem analysis and potential infectious disease risks to recipients and their contacts.

These investigative approaches raise new challenges for the local review bodies responsible for ensuring the safe and ethical conduct of this research. Local IRB's are responsible for reviewing biomedical and behavioral research involving human subjects, to protect the rights of human subjects (45 CFR part 46, Protection of Human Subjects, and 21 CFR part 56, Institutional Review Boards). Institutional Biosafety Committees (IBC's) are responsible for reviewing and overseeing basic and clinical research conducted at their institutions. The IBC assesses the safety of the research and identifies any potential risk to public health or the environment (section IV–B–2 National Institutes of Health (NIH) Guideline for Research Involving Recombinant DNA Molecules). This proposed rule would provide a mechanism for public access to human gene therapy and xenotransplantation clinical trial information and for public education, informed discussion and participation that can form a foundation for safe and ethical research in these innovative areas.

The proposed rule would enhance the development of related Federal initiatives that provide for public access to clinical trial information through national data bases: There are also a number of Internet sites sponsored by associations, clinical centers or academic institutions, and nonprofit organizations that provide public access to similar types of clinical trial information. Examples include: Center Watch Clinical Trials Listing Service at http://www.centerwatch.com, a resource both for patients interested in participating in clinical trials and for research professionals; http://www.HealthAtoZ.com, a search engine for health and medical Internet resources; the Musella Foundation for brain tumor research and information, at http://www.virtualtrials.com; the National Alliance of Breast Cancer Organizations, at http://www.nabco.org, which, in an effort to increase awareness of clinical trials, lists brief descriptive summaries of clinical trials in the National Cancer Institute Physician Data Query (NCI PDQ) data base; the University of Michigan, at http://www.cancer.med.umich.edu, which lists clinical trials at the University of Michigan Cancer Center (UMCC) and supplies links to external clinical trials and resources; the former Surgeon General C. Everett Koop's Internet site, at http://www.drkoop.com, which allows the public to browse through a listing of therapeutic areas where volunteers are being sought for clinical trials; Biotechnology Industry Organization, a trade association, at http://www.bio.org, which lists press releases and industry news, and provides links to patient groups and professional medical societies; and http://www.investor.biospace.com, which has not only a biotechnology search engine that links to hundreds of companies, but also extensive information on the latest technologies and clinical trials, as a basis for investment. The proposed rule should facilitate the development of similar data bases, either publicly or privately sponsored, with information concerning the study of gene therapy and xenotransplantation. As provided under section 113 of the Food and Drug Modernization Act of 1997 (Public Law 105–115), NIH, through its National Library of Medicine, has created a national clinical trials data base at http://clinicaltrials.gov to provide patients, family members, and other members of the public with current information about clinical research studies.

4. Basis for Disclosure

Historically, public disclosure of information with regard to human gene therapy and xenotransplantation has assisted FDA in performing its duties and has benefitted the public. The categories of information that may be made publicly available by FDA as a result of this disclosure rule include information currently made public by other Federal agencies in connection with advisory committee meetings or other public workshops or meetings, and through general commercial disclosure.

The NIH Office of Biotechnology Activities (OBA; formerly the Office of Recombinant DNA Activities) administers the Recombinant DNA Advisory Committee (RAC). This committee was established in October 1975, in response to concerns about the potential public health risks and environmental hazards posed by recombinant DNA research, as well as the significant ethical, legal, and societal issues associated with this emerging technology. The RAC has met quarterly in open public session to discuss these issues and, since the first human gene transfer clinical trial was proposed in 1988, the committee has publicly reviewed selected human gene transfer clinical trial protocols. The minutes of RAC discussions of human gene transfer clinical trials and related issues are accessible to the public via the OBA website (http://www.nih.gov/od/oba/index.htm). RAC review and public discussions provide an important mechanism for receiving public input into Federal policy development and for making the public aware of potential toxicities and adverse events associated with gene transfer products. As one example, when a participant in a cystic fibrosis gene transfer clinical trial required intensive care treatment for an acute adverse event suffered shortly after administration of an adenoviral gene transfer product, the investigator was invited to discuss the occurrence with other experts in the field at the next public RAC meeting. This public discussion and analysis facilitated both dissemination of important information about this toxicity and enhanced understanding of its pathogenesis, thereby contributing to the safety of patients in other gene therapy trials.

NIH also collects information on gene transfer studies and makes it available to the public. Appendix M of the ''NIH Guidelines for Research Involving Recombinant DNA Molecules'' (Ref. 4) requires that investigators provide specific information for the purposes of protocol registration, RAC review, and

potential public discussion, and that this information should not contain confidential commercial information or trade secrets, enabling all aspects of RAC review to be open to the public. The required information includes scientific and nontechnical abstracts, the informed consent document, statements on privacy and confidentiality, reports of serious adverse events, protocol amendments, and annual followup reports. Public disclosure of this information has facilitated progress and has contributed to improved patient safety in the field of human gene transfer by providing public access to clinical trial information, rapid dissemination of adverse event information, and summary information regarding outcomes of gene therapy clinical trials and adverse events.

All investigators receiving any NIH funds for basic and/or clinical research involving recombinant DNA molecules, and all investigators affiliated with institutions receiving any NIH funds for basic and/or clinical research involving recombinant DNA molecules, must comply with the NIH Guidelines. The NIH Guidelines also apply to collaborations between NIH-funded or affiliated researchers and privately funded investigators. In addition, commercial sponsors not affiliated with a NIH-funded institution have voluntarily submitted materials to OBA for RAC review. Therefore, the general practice in the field of human gene transfer has been to submit to NIH, OBA the information required under NIH Guidelines with the understanding that the information will be available for RAC review and potentially public discussion. This suggests that the information specified in Appendix M is not generally considered to be proprietary and that its disclosure does not impede commercial development.

The categories of information that would be disclosed as a result of this rulemaking include information that generally has been made public for xenotransplantation protocols. Sponsors of xenotransplantation IND's have publicly disclosed information regarding the scope of xenotransplantation clinical trials and the development of public health safeguards through: (1) Open public sessions of the Xenotransplantation Subcommittee of the Biologics Response Modifiers Advisory Committee (BRMAC) for the Center for Biologics Evaluation and Research (CBER), FDA (December 17, 1997, June 3 and 4, 1999, and January 13, 2000), and (2) Public Health Service (PHS) sponsored public workshops, including the workshop entitled ''Developing U.S. Public Health Policy in Xenotransplantation,'' January 21 and 22, 1998, at which xenotransplantation clinical trials under FDA IND's were summarized by the sponsor or by a sponsor's designee. Transcripts of these meetings can be found on the CBER Internet site at http://www.fda.gov/cber. At these public meetings, FDA scientists and others presented data demonstrating that porcine endogenous retroviruses could be activated and could infect human cells in vitro, and the implications of these data for porcine xenotransplantation product development and regulation were discussed. Based on these discussions, the BRMAC concurred with FDA's decision to place all porcine xenotransplantation clinical trials on clinical hold. During these meetings, FDA publicly discussed testing requirements and results needed by manufacturers in order to address and remove the clinical hold, and allowed sponsors of porcine xenotransplantation IND's the opportunity to present testing strategies, assuring the industry of consistency in regulation. The public as well was assured that Federal oversight was being conducted in a responsible manner.

Information related to the categories of information FDA proposes to disclose is available through publicly accessible filings to the Securities and Exchange Commission (SEC). The Securities Act of 1933 requires that investors receive financial and other significant information concerning securities being offered for public sale. In an annual filing, a company must provide a comprehensive overview of its business. This includes a description of ongoing research programs including discussion of clinical study safety and efficacy results, disclosure of investigational sites and the investigators involved, plans for product development and commercialization, and financial information. This information may be found on the SEC Internet site at http://www.sec.gov/edgarhp.htm.

In addition, voluntary disclosure of information regarding clinical trials of unapproved products and therapies by individual sponsors over the Internet has become widespread. Company Internet sites often provide this information in the form of descriptive summaries of clinical trials, press releases, recruitment opportunities for patients, investment opportunities, and general awareness material.

Thus, information of the kind FDA proposes to disclose concerning clinical trials on human gene therapy and xenotransplantation is already widely disclosed. This disclosure has not impeded commercial development of these products. In addition, the agency considers public disclosure of data and for information from human gene therapy or xenotransplantation clinical trials essential for public education, and for informed discussion and consideration of the public health and safety risks associated with the use of these investigational therapies.

II. Overview of Proposed Rule

A. Scope

The scope of this proposed rule is limited to disclosure of information related to human gene therapy and xenotransplantation. Confidential commercial information, such as information regarding commercial licensing agreements or the identification of suppliers, trade secret manufacturing information, names and other personal identifiers of patients and, except as specifically provided in the regulations, names and personal identifiers of third parties, such as physicians, hospitals, etc., and, at FDA's discretion, interagency or intra-agency memoranda and letters would not be disclosed. FDA is proposing only to disclose certain information necessary to ensure a continued mechanism for public education and input, which FDA believes is essential to the evaluation of the public health impact of these new technologies. FDA believes that these categories of information have not been considered to be proprietary, since they have been made publicly available through various mechanisms and their disclosure has not impeded commercial development. The public expects the current level of information disclosure and public review to continue in the areas of human gene therapy and xenotransplantation where there is potential risk to the public health.

The categories of information related to an IND that would be disclosed under this regulation include: (1) Product and patient safety data and related information, including results from preclinical and clinical studies and tests that demonstrate the safety and/or feasibility of the proposed procedures; (2) the name and address of the sponsor; (3) the clinical indications to be studied; (4) the protocol for each planned study, to include a scientific abstract and a nontechnical abstract, a statement of the objectives, purpose, and rationale of the study, the name and address of each investigator, the name and address of the official contacts of each local review body as appropriate (IRB, IBC) and dated copies of approval by each group, the criteria for patient selection and

exclusion, an estimate of the number of patients to be studied, a description of the treatment that will be administered to patients, and the clinical procedures, laboratory tests, or other measures to be taken to monitor the safety and effects of the drug in human subjects and to minimize risk; (5) written informed consent forms; (6) identification of the biological product(s) and a general description of the method of production, including a description of product features that may affect patient safety; (7) IND safety reports; (8) information submitted to FDA in the annual report; (9) the regulatory status of the investigation, the date of such action, and the reason for such action; and (10) other relevant data and information that the Director, CBER, determines are necessary for the appropriate consideration of the public health and scientific issues, including relevant ethical issues, raised by human gene therapy or xenotransplantation.

To facilitate public disclosure of this information, FDA proposes to require sponsors of human gene therapy and xenotransplantation clinical trials to submit to FDA the information defined above upon submission of: (1) The initial IND, (2) any amendment documenting changes or additions to the IND, at the time the amendment goes into effect, (3) IND safety reports, and (4) annual reports. FDA is not proposing to require the submission of any new information not previously submitted as part of the IND process. For example, FDA is not proposing that all variations and updates of informed consent forms be submitted to FDA for public disclosure; however, under the proposed rule, FDA would disclose any sample informed consent forms generally submitted with an initial IND submission.

The agency requests comment on whether this rulemaking should apply to information as defined above that is submitted in a BLA. Public disclosure of information in a BLA would provide a continuation of the availability of information for public disclosure up until the time of license approval. A disadvantage would be the amount of documentation that would be required to be submitted in order to support this initiative.

The proposed provisions of this rulemaking do not alter the procedures specified in part 312 for submission of an IND. However, with regard to clinical holds of an IND (§ 312.42), FDA would be able to place a human gene therapy or xenotransplantation investigation on clinical hold if the sponsor does not submit to the agency the redacted version of data and information for public disclosure, or if the redacted version submitted is incomplete or not properly redacted.

B. Legal Authority

The proposed regulation would make available for public disclosure specified safety and effectiveness information submitted in support of an IND [1] involving either a human gene therapy or xenotransplantation protocol. This information, discussed thoroughly in section II.C of this preamble, includes protocols, criteria for patient selection and exclusion, summary results of preclinical and clinical studies of the investigational article, a summary of the treatment that will be administered and the measures that will be taken to minimize risk to human subjects, safety reports, informed consent documentation, and information concerning the regulatory status of the product, such as whether it is on clinical hold and the reason for the hold. While such information relating to human gene therapy protocols has routinely been made available to the public through the NIH RAC process for the last 20 years, FDA regulations have consistently provided that similar information submitted to FDA as part of an IND is not publicly available. (See §§ 601.50 and 601.51.) This proposed rule is an attempt to harmonize these approaches for public review of important, new, but potentially hazardous and controversial, therapies. In this way, FDA will be able to more fully participate in existing and future venues for obtaining educated public input and discussion that could inform the agency's deliberations. The agency believes that there is great benefit in having human gene therapy and xenotransplantation products scrutinized, as they are being developed, by individuals with a wide variety of perspectives, including scientists from different disciplines, biomedical ethicists, patient advocacy organizations, and the general public, because of the unique blend of proposed benefit as well as potential risk to society that these products possess. Investigations of these types of products raise serious ethical and scientific issues, and, therefore, the decisionmaking process should be as transparent and fully informed as possible.

The proposed rule would formalize the existing practice of making certain specified types of safety and effectiveness information in IND's for human gene therapy and xenotransplantation publicly available. Such disclosure is necessary in order to protect the public health by informing the research community and the public of the nature and the hazards of the proposed research and by permitting comment on the merits of the proposed research.

The Freedom of Information Act (FOIA), 5 U.S.C. 552, generally provides that Federal agencies must disclose information in their files to the public on request. FOIA is designed to make federal agency records or information available to the public. The Supreme Court has stated that, ''The basic purpose of [the] FOIA is to ensure an informed citizenry, vital to the functioning of a democratic society, needed to check against corruption and to hold the governors accountable to the governed.'' (See *NLRB* v. *Robbins Tire & Rubber* Co., 437 U.S. 214, 242 (1978).)

The statute provides nine exemptions and three law enforcement exclusions that agencies may use to protect specific categories of information from disclosure (5 U.S.C. 552(b)). These exemptions are the only basis for withholding information requested by the public under the FOIA [2] and are discretionary, not mandatory. (See *Chrysler Corp.* v. *Brown*, 441 U.S. 281 (1979).) One of these exemptions is particularly relevant to this proposed rule and the disclosure of information in applications to investigate and market human gene therapy and xenotransplantation products.

Exemption 4 of the FOIA protects trade secrets and confidential commercial information from public disclosure. (See 5 U.S.C. 552(b)(4).) While trade secret information, narrowly defined as secret, commercially valuable information related to manufacturing methods or processes, is present in all IND's and biological product files, including those subject to this proposed rule, this

[1] While human gene therapy and xenotransplantation protocols are generally regulated by CBER as biological products, it is possible that some of these products may be combination products consisting of biological components, drug components, and device components. The same rules of disclosure will apply to the drug or device components of combination products under the same theories discussed later in this section.

[2] It should be noted here that section 301(j) of the act prohibits the public disclosure of information, obtained under certain sections of the act, ''concerning any method or process which as a trade secret is entitled to protection.'' (See 21 U.S.C. 331(j).) In addition, the so-called Federal Trade Secrets Act also contains certain restrictions on the public disclosure of trade secret and confidential commercial information. The Trade Secrets Act does provide for the disclosure of confidential commercial information where such disclosure is ''authorized by law.'' (See 18 U.S.C. 1905.)

proposal will not affect the confidentiality of such information, and therefore it will not be discussed. Confidential commercial information is defined under exemption 4 as ''commercial or financial information obtained from a person and privileged or confidential.'' Each element of the definition must be satisfied for information to be confidential commercial information entitled to protection under exemption 4.

Historically, much of the data and information submitted in IND's and unapproved biological product files has been considered confidential commercial information. (See *Public Citizen Health Research Group* v. *FDA*, 704 F.2d 1280 (D.C. Cir. 1983); *R & D Laboratories, Inc.* v. *FDA* No. 00–CV–0165 (D.D.C. Sept. 7, 2000).) FDA's general information disclosure regulations define confidential commercial information, and provide that information submitted to FDA that falls within this definition is not disclosable. (See 21 CFR 20.61.) Further, the regulations that apply to the submission of IND's and biological product files define the contents of these applications as confidential commercial information generally exempt from disclosure and, indeed, even prohibit the agency from acknowledging the existence of an application (prior to approval) if it has not already been publicly disclosed. (See 21 CFR 312.130, 601.50, and 601.51.) The regulations provide different rules for disclosure after an approval letter has been sent, and when the application has been terminated, abandoned, or otherwise no longer has commercial value.

The agency is exercising its legal authority to promulgate new regulations that will make explicit and will formalize the circumstances and means by which certain safety and effectiveness information in these special types of applications will be made available for public disclosure. Such a change is especially warranted when, as here, the change is being made in large part to reflect the actual environment in which human gene therapy and xenotransplantation applications exist.

As has been discussed elsewhere in this preamble (in section I.B, Issues Related to Human Gene Therapy and Xenotransplantation), sponsors of IND's pertaining to human gene therapy have publicly disclosed the types of information covered by this proposed rule for many years as part of the process overseen by the RAC. Likewise, there has been widespread practice in the field of xenotransplantation to make publicly available a great deal of information concerning details of trials of xenotransplantation products during public advisory committee meetings and workshops sponsored by FDA and by the U.S. PHS. Information that is publicly disclosed by its owner cannot be confidential within the meaning of the FOIA and, as a result, can be made available for public disclosure by FDA. (See *CNA Fin.* v. *Donovan*, 830 F.2d 1132, 1154 (D.C. Cir. 1987).) The fact that these types of information cannot be considered confidential is the principal basis for issuing this proposed rule.

This proposed rule contains the public disclosure procedures the agency will apply to the safety and effectiveness information in human gene therapy and xenotransplantation applications that has historically been treated as confidential commercial information by the agency. These procedures will follow the consistent practice in the fields of human gene therapy and xenotransplantation of making such information available to the public. It is important to note that while certain safety and effectiveness data and information will be publicly available under this proposed rule, FDA does not intend to disclose the full reports of safety and effectiveness on the basis of which the product may be approved. FDA believes that, prior to approval of a biological product file, the full reports constitute confidential commercial information, as they traditionally have under the agency's regulations, and should not be released. (See 21 CFR 601.51(d).) However, under § 601.51(e), all safety and effectiveness data and information do become publicly available after a license is issued, and this practice will not be changed by this proposal.

In addition to the full reports, the agency also wishes to make clear that it will continue its current policy of not releasing confidential commercial information that is contained in a human gene therapy or xenotransplantation IND or unapproved biological product file. Examples of confidential commercial information that may exist in these applications would include information concerning licensing agreements and information identifying suppliers. This information ordinarily will remain confidential under exemption 4 unless it has already been publicly disclosed by the sponsor. Such business-related information is also not the type of information that FDA believes should be disclosed to further the public discussion and evaluation of human gene therapy and xenotransplantation trials. In addition, this proposed rule will not affect the rules governing the disclosure of personal medical and other similar information, the disclosure of which would cause an unwarranted invasion of personal privacy. (See 21 CFR 20.63.)

Based on the authorities discussed, the agency proposes to require sponsors of IND's related to human gene therapy and xenotransplantation to disclose certain specified safety and effectiveness data and information. This proposal will formalize and codify the existing practice in these fields under which these data and information have been publicly disclosed by their sponsors. Disclosure is especially necessary regarding these new, important, and also controversial technologies so that the research community and the public can be assured of the safety of conducting clinical trials of these products.

This proposal would require the sponsors of human gene therapy or xenotransplantation IND's to submit to FDA publicly available versions of information FDA requires in such IND's. The purpose of this requirement is to facilitate FDA's efforts to make important information concerning human gene therapy and xenotransplantation IND's available to the public in a timely and efficient manner. Sponsors would have to redact the information from IND submissions specified in proposed § 601.53. Sponsors would redact trade secrets, confidential commercial information, such as licensing agreements and suppliers, and names and other personal identifiers of patients and, except as specifically provided in the regulations, names and personal identifiers of third parties, such as physicians, hospitals, etc. (See §§ 20.61 and 20.63.) It would not be necessary for sponsors to redact the vast majority of the information in human gene therapy and xenotransplantation IND's since, as described in this proposal, such information would be publicly disclosable.

The proposed rule would also specify that FDA may place a human gene therapy or xenotransplantation investigation on clinical hold if the sponsor has not submitted to the agency a redacted and thus disclosable version of the required IND information that complies with the requirements of proposed § 601.53. A sponsor must properly purge its redacted version of trade secrets, confidential commercial information, and names and other personal identifiers and, except as specifically provided in the regulations, names and personal identifiers of third parties, such as physicians, hospitals,

etc. Section 505(i)(3) of the act authorizes FDA to prohibit a sponsor of an investigation from conducting that investigation if FDA determines that the drug involved represents an unreasonable risk to the safety of persons who are the subjects of the clinical investigation, or if there are other reasons that FDA has established by regulation for which the agency may issue a clinical hold. FDA recognizes that errors in redacting may occur and will provide sponsors with an opportunity to correct such errors. However, FDA will have the enforcement authority to place a human gene therapy and xenotransplantation investigation on clinical hold if resolution is not reached on any discrepancies found by FDA in the redacted versions, or if a redacted version is not submitted at all by the sponsor. As described in this proposal, it is important for proposed and ongoing human gene therapy and xenotransplantation investigations to be the subject of public education, discussion, and consideration in order for all relevant issues, including safety, to be explored.

As stated above, FDA has tentatively concluded that the information that would be disclosed as a result of this rulemaking is, in fact, already being made public through a variety of mechanisms, and therefore cannot be considered confidential. As such, it does not constitute confidential commercial (or trade secret) information within the meaning of FOIA Exemption 4.

However, FDA's issuance of this proposed rule is authorized even if the information to be disclosed could be considered confidential commercial information covered by Exemption 4 and within the scope of protection of the Trade Secrets Act (18 U.S.C. 1905). That statute prohibits the disclosure of confidential commercial or trade secret information, except as ''authorized by law.'' Because agency regulations that specifically provide for the disclosure of such information can supply the requisite legal authorization for release of the information for purposes of the Trade Secrets Act, that statute would not present a bar to any of the disclosures contemplated by this proposed rule. (See, e.g., CNA Financial Corp., 830 F.2d 1132, 1138–1139 (D.C. Cir. 1987)).

The broad rulemaking authority conferred on FDA by Congress under the act (21 U.S.C. 201 *et seq.*) permits the agency to amend its regulations as contemplated by this proposed rule.

Section 505(i) of the act (21 U.S.C. 355(i)) gives FDA the authority to issue regulations imposing conditions on the investigation of new drugs. In addition to prescribing certain mandatory conditions, that section further provides that the agency may impose ''other conditions'' as necessary ''relating to the protection of the public health.'' (21 U.S.C. 355(i)). This language was added to the act as part of the Drug Amendments of 1962 (Public Law 87–781) to make it ''clear that the conditions prescribed in the [bill] are not the sole conditions that may be imposed for the protection of public health.'' H.R. Conf Rep. No. 2526, at 20 (1962), reprinted in 1962 U.S.C.C.A.N. 2927, 2929. Legislative history relating to these amendments also indicates that one purpose of the bill was to make ''information on drugs * * * more readily available to physicians and the general public.'' (S. Rep. No. 1744, at 1 (1962), 1962 U.S.C.C.A.N. 2884). FDA's broad discretion in adopting regulations under this language has been upheld by the courts. (*United States* v. *Garfinkel*, 29 F.3d 451 (8th Cir. 1994)).

The proposed amendments to FDA's regulations are within FDA's statutory discretion in imposing conditions on products under development to promote the public health. The public health often is served not only by collection of research data and information, but also by disclosure of such information. (See e.g., *Dole* v. *United Steelworkers of America*, 494 U.S. 26, 28 (1990)).

The proposed rule would serve several significant public health goals. It would enhance the ability of patients with serious and life-threatening diseases and others seeking information about emerging therapies to obtain critically important information from FDA about the existence of clinical trials in which they might participate, about possible safety problems associated with the products they are taking, and about the regulatory status of applications pending before the agency.

As an aftermath of recent problems in clinical trials involving gene therapy products, FDA and NIH have launched two new initiatives to further strengthen the safeguards for individuals enrolled in clinical studies for gene therapy. One initiative, the Gene Therapy Clinical Trial Plan, would ensure: That sponsors meet their obligation to adequately monitor the clinical trials for which they are responsible; that there is appropriately independent oversight of such clinical trials; and that there is an increased level of government oversight, through increased inspection frequency and review of sponsors' monitoring plans and other clinical trial practices. Under the other initiative, FDA and NIH will, several times per year, convene Gene Transfer Safety Symposia to provide a critical forum with experts in gene transfer for the sharing and analysis of medical and scientific data from gene transfer research. FDA and NIH support will also be provided for professional organizations and academic centers to hold safety conferences focused on gene therapy. These safety symposia and educational outreach efforts are intended to guide the conduct of current clinical trials and enhance the design of future gene transfer trials to maximize public safety.

The ready availability of information concerning clinical trials involving gene therapy is essential to the success of these efforts. For example, such information would be discussed at the government's safety symposia, may be made available for other scientific discussions and to the general public, and would be used in evaluating current gene therapy practices, including sponsor monitoring and informed consent standards. Likewise, FDA intends to continue to sponsor and support government, professional, and academic conferences related to xenotransplantation. Thus, FDA believes that the disclosure of information contained in INDs related to gene therapy and xenotransplantation trials is essential to patient safety and appropriate informed consent.

In addition to section 505(i), section 701(a) of the act (21 U.S.C. 371(a)) gives FDA general rulemaking authority to issue regulations for the efficient enforcement of the act. A regulation issued under section 701 of the act will be sustained as long as it is reasonably related to the purposes of the act. (*United States* v. *Nova Scotia Food Prod. Corp.*, 568 F.2d 240, 246 (2d Cir. 1977)). Section 903(b) of the act (21 U.S.C. 393(b)) explicitly states that the mission of FDA includes the promotion and protection of the public health. It has long been recognized by the courts, including the Supreme Court, that the primary purpose of the act is the protection of public health (*United States* v. *An Article of Drug, Bacto-Unidisk*, 394 U.S. 784, 798 (1969)). As a result, FDA's rulemaking authority under section 701(a) of the act has been broadly construed to uphold a wide variety of the agency's rulemaking activities intended to protect the public health. (See e.g., *National Ass'n of Pharmaceutical Mfrs.* v. *FDA*, 637 F.2d 877 (2d Cir. 1981)) (current good manufacturing practice regulations); *Pharmaceutical Mfrs. Ass'n* v. *FDA*, 484 F. Supp. 1179 (D. Del. 1980) (rule requiring disclosure of drug side effects to patients); *American Frozen Food Inst.*

v. *Mathews*, 413 F. Supp. 548 (D.D.C. 1976) (rule establishing common and usual names for certain nonstandard foods to provide consumers with relevant buying information), *aff'd*, 555 F.2d 1059 (D.C. Cir. 1977); *National Nutritional Foods Ass'n* v. *Weinberger*, 376 F. Supp. 142 (S.D.N.Y.) (rule requiring that certain vitamin preparations be restricted to prescription sale and be labeled accordingly), *aff'd*, 512 F.2d 688 (2d Cir. 1975)), *cert. denied*, 423 U.S. 827 (1975). FDA believes that its rulemaking authority under section 701(a) of the act supports the amendments proposed here because they advance public health goals concerning gene therapy and xenotransplantation studies.

FDA is also proposing to issue this new regulation under the authority of section 361 of the Public Health Service Act (PHS Act) (42 U.S.C. 264). Under section 361 of the PHS Act, FDA may make and enforce regulations necessary to prevent the introduction, transmission, or spread of communicable diseases between the States or from foreign countries into the States. (See sec. 1, Reorg. Plan No. 3 of 1966 at 42 U.S.C. 202 for delegation of section 361 of the PHS Act authority from the Surgeon General to the Secretary, Health and Human Services; see 21 CFR 5.10(a)(4) for delegation from the Secretary to FDA.) Intrastate transactions may also be regulated under section 361 of the PHS Act.

This proposed regulation is part of a regulatory program that will further the goal of preventing the introduction, transmission, or spread of communicable disease. For this regulatory system to be effective in preventing the spread of disease, FDA must be able to regularly make publicly available information regarding these experimental procedures. By providing sponsors, clinical investigators, patients and their families, and the general public with access to the types of information proposed in this rule, FDA will be able to more rapidly identify and react appropriately to newly discovered or understood risks in order to prevent the spread of communicable disease.

Studies in the areas of gene therapy and xenotransplantation are conducted to explore the potential for considerable benefits. However, use of these procedures, particularly in the case of xenotransplantation, poses potential risks for the transmission of infectious disease. Infectious disease public health concerns focus not only on the transmission of known zoonoses, but also on the transmission of infectious agents as yet unrecognized. The disruption of natural anatomical barriers and immunosuppression of the recipient increase the likelihood of interspecies transmission of xenogeneic infectious agents. An infectious agent may pose risks if it can infect, cause disease in, and transmit among humans, or if its ability to infect, cause disease in, or transmit among humans remains inadequately defined. The public availability of information this proposed rule envisions will permit public attention to any emerging risks associated with these experimental techniques, early detection and definition of which will permit the agency and sponsors to take steps to prevent or minimize the introduction of communicable disease.

An additional concern is that these infectious agents could subsequently be transmitted from the patient to family members and other close contacts of the patients, to health care personnel, and to other members of the public. Because the potential risk of transmission of infectious disease extends beyond the patient receiving the treatment, it is vital that the public, as well as the patient, be informed and educated about potential infectious disease risks and methods for reducing those risks. Close contacts should understand the uncertainty regarding the risks of xenogeneic infections, behaviors known to transmit infectious agents from human to human (e.g., unprotected sex, breast feeding, intravenous drug use with shared needles, and other activities that involve potential exchange of blood or other body fluids) and methods to minimize the risk of transmission. Close contacts of recipients also need to know about the importance of reporting any significant unexplained illness through their health care provider to the research coordinator at the institutions where the xenotransplantation was performed. This broader concern for the spread of communicable disease is reflected in the proposed requirements providing for public disclosure. While informed consent procedures may try to address these educational needs, the public release and discussion of information that this proposed rule calls for is also necessary to ensure that all those potentially at risk have the information to manage these risks and so avoid or minimize the spread of communicable disease.

For all the above reasons, to promote and protect the public health, FDA is proposing to issue this proposed rule providing for public disclosure of certain information relating to gene therapy and xenotransplantation.

C. Discussion of the Proposed Rule

The proposed rule would create a new § 601.52 entitled ''Availability for public disclosure of certain data and information related to human gene therapy or xenotransplantation'' and § 601.53 entitled ''Submission to FDA of certain data and information related to human gene therapy or xenotransplantation for public disclosure.'' In addition, conforming amendments are proposed to §§ 20.100, 312.42, 312.130, 601.50, and 601.51. The provisions of this rulemaking do not alter the procedures specified in part 312 for submission of an IND. The proposed regulations are discussed below.

1. Sections 601.50 and 601.51

Part 601 (21 CFR part 601) sets forth provisions that govern the licensing of biologic products by the FDA. Existing procedures and requirements regarding confidentiality of data and information contained in IND's for biological products or biologics license applications are described in §§ 601.50 and 601.51. The proposed rule would amend §§ 601.50 and 601.51 to include language that would reference the exceptions proposed in § 601.52 regarding the availability for public disclosure of certain data and information related to human gene therapy or xenotransplantation. Specifically, §§ 601.50(a) and 601.51(a) would be amended to add the words, ''Except as provided in § 601.52.''

In addition, FDA is proposing to amend the § 601.50 section heading and § 601.50(a) to replace the word ''notice'' with ''application'' to be consistent with other current regulations regarding investigational new drugs, i.e., part 312.

2. Proposed § 601.52

Proposed § 601.52 would set forth the requirements regarding the availability for public disclosure of certain data and information related to human gene therapy or xenotransplantation. These provisions would define the therapies and scope of the proposed regulation, and describe the types of data and information related to human gene therapy and xenotransplantation that may be disclosed by FDA.

a. *Definitions.* Proposed § 601.52(a) would include definitions of human gene therapy and xenotransplantation that are consistent with existing agency policy and guidance regarding these therapies. Proposed § 601.52(a)(1) would define ''human gene therapy'' to mean the administration of genetic material in order to modify or manipulate the expression of a gene

product or to alter the biological properties of living cells for therapeutic use. FDA interprets this definition to include both the ex vivo and in vivo modification of cells. Proposed § 601.52(a)(2) would define ''xenotransplantation'' to mean any procedure that involves the transplantation, implantation, or infusion into a human recipient of either: (a) Live cells, tissues, or organs from a nonhuman animal source, or (b) human body fluids, cells, tissues, or organs that have had ex vivo contact with live nonhuman animal cells, tissues, or organs. This definition of xenotransplantation does not include the use of products that are nonliving, acellular products such as porcine heart valves, porcine insulin, or bovine serum albumin. The definition also does not include non-animal cells and tissues, such as bacteria and plant cells.

Because the terms ''human gene therapy'' and ''xenotransplantation'' are not currently used elsewhere in the regulations, FDA is proposing that, for the convenience of the user, the definitions be included in proposed § 601.52. If, in the future, additional regulations are issued using these terms, FDA intends to move these definitions to the section of the regulations which currently includes definitions of other terms applicable to biological products (21 CFR 600.3).

b. *Scope*. Proposed § 601.52(b) would describe the scope of the proposed regulation. Consistent with the use of the terms ''human gene therapy'' and ''xenotransplantation,'' FDA intends that the proposed rule apply to the procedures, not specific products used in the therapies, although data and information regarding a product may be disclosed as proposed in § 601.52(c). FDA intends with this broadly-defined scope that the proposed regulation apply to any experimental use of human gene therapy and xenotransplantation, although the immediate impact of the proposed regulation would be on investigational products. For example, the proposed regulations would apply to any use of gene therapy or xenotransplantation in clinical studies in humans, including use of a licensed gene therapy or xenotransplantation product with an experimental drug or device being clinically studied for use in a gene therapy or xenotransplantation procedure.

FDA believes it is not necessary to disclose for purposes of public education and discussion all the information which may be included in an IND. Except as specifically provided in the proposed rule, FDA intends that information regarding human gene therapy or xenotransplantation investigations will continue to be held confidential, consistent with existing regulations in §§ 20.61, 20.62, 20.63, 20.100, 312.130, 601.50, and 601.51. Accordingly, proposed § 601.52(b) would specify that, except as specifically provided in proposed § 601.52, the availability for public disclosure of data and information related to human gene therapy or xenotransplantation shall remain in accordance with § 601.50 for IND's for a biological product.

c. *Information for public disclosure.* Proposed § 601.52(c) would specify the types of data and information related to human gene therapy or xenotransplantation that the FDA may make available for public disclosure. The types of information listed in proposed § 601.52(c) are already required for submission under existing regulations (parts 312 and 601) as part of an IND or BLA or as a supplement to a BLA.

Under proposed § 601.52(c)(1), FDA would make product and patient safety data and related information related to human gene therapy and xenotransplantation available for public disclosure. This proposed provision is similar to existing requirements in § 601.51(e)(1), which require that all safety and effectiveness data and information contained in a biological product file be made available for public disclosure immediately after a license has been issued. The proposed provisions in § 601.52, however, would extend this throughout the entire product development process for a product related to human gene therapy or xenotransplantation. The proposed rule further specifies in § 601.52(c)(1) that for the purposes of this proposed regulation, product and patient safety data and related information include results of preclinical and clinical studies and tests that demonstrate the safety and/or feasibility of the proposed procedures. In addition, FDA proposes in § 601.52(c)(1) to identify some of the types of product and patient safety data and related information that would be disclosed to the public that are particularly relevant or specific to human gene therapy and xenotransplantation. These types of product and patient safety data and related information are: (1) Analysis in animals, humans, or in vitro systems of gene transfer, expression, and persistence; (2) vector biodistribution; (3) evidence for immune response/anergy; (4) biological activity; (5) results of product safety testing including test results for known xenogeneic and human infectious agents and replication competent virus; (6) qualification of source herd, individual source animal, and source organ/tissue/cells for xenotransplantation in humans; and (7) information on monitoring or prevention of potential health risks to the recipient, close contacts, and health care workers. FDA does not intend this to be an exclusive list. In all cases, names and other personal identifiers of patients and, expect as specifically provided in the regulations, names and other personal identifiers of third parties, such as physicians or hospitals, would be removed. Furthermore, FDA does not intend product and patient safety data and related information under proposed § 601.52(c)(1) to include IND safety reports and annual reports, as provided for in §§ 312.32 and 312.33. Rather, specific requirements for the public disclosure of these types of reports are proposed below in § 601.52(c)(7) and (c)(8), respectively.

Under proposed § 601.52(c)(2) and (c)(3), FDA would make the name and address of the sponsor and the clinical indications to be studied available for public disclosure. The sponsor name and address and the indications to be studied are types of information that are consistent with information already required for submission to FDA in an IND under § 312.23(a)(1)(i) and (a)(3)(iv)(*b*), respectively.

Under proposed § 601.52(c)(4), FDA would make the protocol for each planned study available for public disclosure. A study protocol is required for submission in an IND under § 312.23(a)(6); proposed § 601.52(c)(4) would specify that certain elements of the protocol be available for public disclosure. Proposed § 601.52(c)(4)(i) through (c)(4)(vi) would describe the following specific elements of the protocol to be available for public disclosure: (1) A scientific abstract and a non-technical abstract; (2) a statement of the objectives, purpose, and rationale of the study (submitted in an IND under § 312.23(a)(6)(iii)(*a*)); (3) the name and address of each investigator (submitted in an IND under § 312.23(a)(6)(iii)(*b*)); (4) the name and address of the official contacts of each local review body as appropriate (IRB (submitted in an IND under § 312.23(a)(6)(iii)(*b*)), and IBC (NIH *Guidelines for Research Involving Recombinant DNA Molecules*, revised April 1998)) and dated copies of each committee's approval of the study; (5) the criteria for patient selection and exclusion and an estimate of the number of patients to be studied (submitted in an IND under § 312.23(a)(6)(iii)(*c*)); and (6) a description of the treatment that will be administered to patients and the clinical procedures, laboratory tests, or

other measures to be taken to monitor the safety and effects of the drug in human subjects and to minimize risk (similar to that submitted in an IND under § 312.23(a)(6)(iii)(*g*)). FDA intends that the term ''investigator' in proposed § 601.52(c)(4)(iii) include ''sponsor-investigators'' (individuals who have the responsibility for both the development and clinical investigation of the product) as well as ''investigators,'' both of which are defined in existing § 312.3(b). In proposed § 601.52(c)(4)(iv), FDA intends to make available for public disclosure the dated copies of the IRB's and IRC's approval of the proposed clinical study to identify when the IRB or IBC assumed responsibility for the continued review and approval of the IND.

Under proposed § 601.52(c)(5), FDA would make sample informed consent forms available for public disclosure. FDA proposes to provide public access to human gene therapy and xenotransplantation clinical trial information relevant to informed consent to promote public education, discussion, and consideration of the unique challenges that these novel therapies present to assuring adequate informed consent, as discussed previously in this proposed rule.

Under proposed § 601.52(c)(6), FDA would make the identification of the biological product(s) and a general description of the method of production, including a description of product features that may affect patient safety, available for public disclosure. This proposed provision contains types of information that are required for submission to FDA in an IND under § 312.23. FDA has modified the language taken from § 312.23 to reflect information needs related to human gene therapy and xenotransplantation and specifies that only a ''general'' description of the production method would be made available, excluding trade secret information. FDA does, however, propose to further specify in § 601.52(c)(6) that the identification and description would include the following types of information, as applicable: (1) The vector name and type; (2) gene insert; (3) regulatory elements and their source; (4) intended target cells; (5) source of cells, tissues, or organ(s); (6) method used to prepare the vector containing cells; (7) method used to procure and prepare cells, tissues, or organ(s) for xenotransplantation; (8) purity of cells; (9) adventitious agent testing; (10) description of the delivery system; (11) ancillary products used during production; (12) herd colony and individual source animal health maintenance and surveillance records; and (13) biological specimens to be archived from source animals. These types of information are consistent with information that is already submitted to and publicly disclosed by OBA for human gene therapy.

Under proposed § 601.52(c)(7), FDA would make IND safety reports, as provided in § 312.32, and other similar data and information available for public disclosure. Under § 312.32, sponsors of investigational drugs, including biological drugs, are required to submit to FDA certain adverse reaction reports concerning their product. Under § 601.51(e)(3), information concerning these adverse experience reports, excluding names and other identifiers of patients, health care facilities, and physicians, may be publicly disclosed after the licensure of the product. Under proposed § 601.52(c)(7), such adverse experience reports and other safety reports related to an investigational product could be publicly disclosed at any time throughout the lifetime of the product. The same limitations for disclosure included in § 601.51(e)(3) are included in proposed § 601.52(c) to protect the privacy of patients and health care workers.

Under § 601.52(c)(8), FDA would make information submitted in the annual report available for public disclosure. Sponsors must submit to FDA annual reports of the progress of the investigations as required under § 312.33. FDA proposes that the following types of information relevant to human gene therapy and xenotransplantation be included, as applicable, in the annual report submitted by the sponsor to FDA for public disclosure: (1) Evidence of gene transfer, gene expression in target cells, and biological activity; (2) assessment of immune response; (3) analysis of biodistribution; (4) significant preclinical and clinical toxicities; (5) evidence of infection by agents associated with the products; (6) adverse experiences; (7) number of subjects who died during participation in the investigation, with the cause of death for each subject and the status of autopsy requests; and (8) any available post mortem evidence of gene transfer, biodistribution, specifically including gonadal distribution. In all cases, names and other personal identifiers of patients and, except as specifically provided in the regulations, names and other personal identifiers of third parties, such as physicians or hospitals, would be removed.

Under proposed § 601.52(c)(9), FDA would make the regulatory status of the investigation, the date of a regulatory action, and the reason for an action available for public disclosure in order to identify to the public the current regulatory status of a clinical investigation. For example, FDA would disclose that an investigation is on clinical hold, or that an IND is inactive, withdrawn, or terminated. Additional information regarding the procedures and criteria for placing an investigation on clinical hold, withdrawal of an IND, inactive status for an IND, and IND termination may be found in §§ 312.42, 312.38, 312.45, and 312.44, respectively.

Under § 601.52(c)(10), FDA would make available for public disclosure other relevant data and information that the Director, CBER, determines are necessary for the appropriate consideration of the public health and scientific issues, including relevant ethical issues raised by human gene therapy or xenotransplantation. This proposed provision is included because the investigational nature of these therapies and the continuing evolution of the science surrounding these therapies renders FDA unable to anticipate all of the types of information related to human gene therapy and xenotransplantation that may warrant public education, discussion, and consideration. Examples of other relevant data that FDA may disclose could, under certain circumstances, include the details of a test used to determine eligibility for trial entry or autopsy or biopsy information. However, in general, FDA intends to release only the information specifically identified in this proposed rule, except in unique conditions or circumstances. Proposed § 601.52(c)(10) would provide that other relevant data and information may be approved for disclosure only by the Director of CBER.

3. Proposed § 601.53

Proposed § 601.53 would require sponsors of human gene therapy and xenotransplantation clinical trials to submit to FDA for public disclosure a redacted version of certain data and information. These provisions would specify when and what types of submissions to make to FDA in a redacted version for public disclosure, and the requirements for identifying and certifying these submissions.

Furthermore, proposed § 312.42(b)(6) provides that a sponsor's failure to submit to FDA the data and information specified in §§ 601.52 and 601.53 that has been properly redacted under § 601.53(a) is a basis for FDA placing the investigation on clinical hold. FDA recognizes that errors in redacting may occur and will provide sponsors with an

opportunity to correct such errors. However, FDA will have the enforcement authority to place a human gene therapy and xenotransplantation investigation on clinical hold if resolution is not reached on any discrepancies found by FDA in the redacted versions, or if a redacted version is not submitted at all by the sponsor. It is important that FDA has the specific authority to place a human gene therapy or xenotransplantation investigation on clinical hold if the sponsor has not submitted required data and information to FDA in a form that FDA can make publicly available in a timely and efficient manner. As previously described in this proposal, due to the unique nature of human gene therapy and xenotransplantation, public participation in the consideration of proposed and ongoing clinical studies of such therapies is crucial. In order for such public education, discussion, and consideration to take place and be meaningful, FDA must be able to make all relevant and publicly disclosable data and information available to the public as soon as practicable. The agency has determined that having sponsors submit redacted versions that comply with proposed §§ 601.52 and 601.53 is the most efficient means to accomplish this.

Under proposed § 601.53(a), FDA would require the sponsor of an IND to submit to FDA for public disclosure a redacted version of the types of submissions identified in § 601.53(b)(1) through (b)(5). The sponsor would be required to include all applicable information identified as disclosable in § 601.52 and redact all information considered confidential as trade secret, names and other personal identifiers of patients and, except as specifically provided in the regulations, names and personal identifiers of third parties, such as physicians, hospitals, etc., and certain confidential commercial information, such as information regarding commercial licensing agreements or the identification of suppliers. Sponsors would be permitted to redact either by removing or obscuring the information exempt from disclosure.

Proposed § 601.53(b)(1) through (b)(5) would list the types of submissions that the sponsor would be required to submit to FDA in duplicate and as a redacted version for public disclosure. FDA believes this information should be available for public disclosure as soon as possible and therefore, would require under this paragraph that the redacted version be submitted to FDA concurrently with the original unabridged submission or at the specific time points noted.

Proposed § 601.53(b)(1) would require submission for public disclosure a redacted version of the information defined under § 601.52 to accompany the original unabridged IND submission.

Proposed § 601.53(b)(2) would require submission for public disclosure a redacted version of any amendment documenting changes or additions to the information defined under § 601.52 that occur either during the IND review process or after the IND goes into effect. FDA recognizes that some amendments may require negotiation with FDA and subsequent revision by the sponsor. As such, FDA would require that the redacted version of any amendment be submitted at the time the amendment goes into effect.

Proposed § 601.53(b)(3) would require submission for public disclosure of a redacted version of any IND safety report at the time of submission of the original report to FDA. Sponsors are required under § 312.32 to notify FDA in a written IND safety report of any serious and unexpected adverse experiences associated with the use of their drug no later than 15 days after the sponsor's initial receipt of the information. FDA believes that the timely availability of adverse experience information is essential for public education and informed discussion and consideration of the health and safety issues presented by the experiences.

Proposed § 601.53(b)(4) would require submission for public disclosure of a redacted version of the annual report, in accordance with § 312.33. Consistent with § 312.33, sponsors would be required to submit, within 60 days of the anniversary date that the IND went into effect, a redacted version of the annual report.

Under proposed § 601.53(b)(5), a sponsor would be required to submit for public disclosure a redacted version of other information upon specific request of the Director, CBER. For example, FDA may request that the sponsor submit information regarding a test used to determine eligibility for trial entry. This proposed provision is included because due to the investigational nature of these therapies and the continuing evolution of the science surrounding these therapies, FDA is not able to anticipate all of the types of information related to human gene therapy and xenotransplantation that may warrant public education, discussion, and consideration. However, in general, FDA does not intend to request information not identified in this proposed rule, except for unique conditions or circumstances.

Proposed § 601.53(c) would require that the sponsor submit the information identified in § 601.53(b) in duplicate, in a form readily separable from the nonredacted or original unabridged version or submission and clearly marked as suitable for public disclosure on each page of the submission. This proposed provision would enable FDA to identify and provide this information more rapidly to the public and would help assure that only appropriate information is disclosed to the public.

Proposed § 601.53(d) would require that any copyrighted material be included in a single appendix to the submission and listed in a bibliography in the redacted version. The proposal would specify that any copyrighted material whose copyright is not owned by the applicant shall not be included in any other section of the redacted version. FDA is including this provision to facilitate timely release of the redacted version on the Internet. In response to an FOIA request, copyrighted materials can be included in the response. However, with regard to posting on the Internet, copyrighted material must be redacted prior to electronic disclosure as this is not considered a ''fair use'' of copyrighted material. Therefore, FDA would not release the appendix containing copyrighted materials as part of the redacted version on the Internet, but may release the bibliography of materials included in the appendix.

Proposed § 601.53(e) would require that redacted versions be accompanied by the statement specified to ensure that the sponsor has redacted only the information identified in § 601.53(a) as exempt from disclosure (confidential commercial, trade secret, or personal information). In addition, under proposed § 601.53, the sponsor must include a declaration that the statement is true and correct, under penalty of perjury.

4. Conforming Amendments

The proposed rule would make conforming amendments to parts 20 and 312. Part 20 describes the procedures and policy regarding the availability and disclosure of information to the public. Section 20.100 lists the cross-references to other sections of title 21 CFR that contain requirements on the availability of specific categories of FDA records and how these records are handled upon a request for public disclosure. The proposed rule would amend § 20.100(c) by adding a paragraph (43) that would contain a cross-reference to the proposed § 601.52 regarding the availability for public disclosure of certain data and information submitted

to FDA related to human gene therapy or xenotransplantation.

Part 312 describes the procedures and requirements that govern the use of investigational new drugs, including provisions for submission to and review by FDA of IND's. The provisions of this rulemaking do not alter the procedures specified in part 312 for submission of an IND. Section 312.42, among other things, lists the grounds for which FDA may impose a clinical hold of an investigation. Proposed § 312.42(b)(7) would amend § 312.42 by adding an additional basis for clinical hold for human gene therapy and xenotransplantation investigations. Under this proposal, FDA could place a human gene therapy or xenotransplantation investigation on clinical hold if the sponsor has not submitted to the agency a redacted version for public disclosure that complies with the requirements of § 601.53.

Section § 312.130 contains requirements regarding the availability for public disclosure of data and information in an IND. The proposed rule would amend § 312.130 by revising paragraph (b) to include a reference to proposed § 601.52, in addition to the existing references to §§ 601.50 and 601.51, when listing the provisions of this chapter that govern the availability for public disclosure of all data and information in an IND.

III. Implementation

Under the proposed rule, FDA would require that sponsors of human gene therapy and xenotransplantation clinical trials submit for public disclosure a redacted version of the information defined under § 601.52 as contained in the initial IND submission, amendments documenting changes or additions to the information defined under § 601.52 at the time the amendments go into effect, IND safety reports, and annual reports. The redacted version of these documents should be submitted to FDA in a form immediately releasable to the public, and clearly marked accordingly on each page of the submission as suitable for public disclosure. Acceptable approaches range from submitting a ''marked up'' version of the original that obscures the information which is not to be disclosed, to developing a separate document that abstracts the needed information for public disclosure from the original unabridged version submitted to FDA.

Specifically, FDA is proposing that the redacted version of the information specified in the proposed rule be submitted to FDA concurrently with the original unabridged IND submission or at the specific time points noted in the provisions. Sponsors of human gene therapy and xenotransplantation clinical trials would send an original and two copies of the original unabridged version of the IND submission (as required under existing § 312.23(d)) as well as one copy of the redacted version for public disclosure to FDA's CBER, where they would be received by the Document Control Center (DCC) to be logged, filed, and routed for appropriate documentation, review, and approval. DCC would route the submittals to the appropriate FDA reviewer, where, upon receipt, the redacted version for public disclosure would be reviewed for administrative completeness as well as to ensure that the submitting sponsor has appropriately redacted personal information regarding patients and third parties prior to release to the public. Once this review is complete, the redacted version for public disclosure would be sent to the Dockets Management Branch for public display where a docket number would be assigned. Each redacted version for public disclosure submitted to FDA would be tagged with the same docket number for that IND for reference. FDA is also proposing to make the redacted versions for public disclosure available to the public electronically on the Internet site according to the docket number.

In addition, to facilitate timely release by FDA of the redacted version, FDA is proposing to require that all copyrighted materials submitted in accordance with § 601.53 be placed in a single appendix and listed in a bibliography in the redacted version. Should an FOIA request be received for the data and information specified in § 601.52, FDA would be able to include a copy of any copyrighted materials in its response. However, FDA would not be able to publicly release any copyrighted material on the Internet as electronic posting of such information is not a ''fair use'' of that copyrighted material and must be redacted prior to electronic release. In this case, FDA instead would disclose the bibliography of copyrighted materials contained in the appendix.

FDA encourages, but would not require at this time, sponsors to submit the redacted version for public disclosure in electronic format. Pilot programs are currently underway regarding submission of electronic IND's and BLA's. (See 63 FR 29740 and 29741.) As such, FDA may, in the near future, implement electronic submission and disclosure of this information.

Sponsors of human gene therapy or xenotransplantation clinical trials who submit an initial IND or an amendment to an existing IND on or after the effective date of the final rule resulting from this rulemaking would be required to submit a redacted version for public disclosure in conformance with the rule.

Sponsors of xenotransplantation clinical trials who have submitted an IND to FDA prior to the effective date of the final rule resulting from this rulemaking would be required to submit for public disclosure a redacted version of the information defined under § 601.52, reflecting all amendments to date, by a date specified in the final rule.

Sponsors of human gene therapy clinical trials who have submitted IND's or amendments prior to the effective date of the final rule, need not submit redacted versions. For these IND's or amendments, FDA will rely on the existing OBA database as a source of the information that FDA will disclose.

For additional information regarding the proposed effective dates for the final rule see the end of this preamble.

IV. Environmental Impact

The agency has determined under 21 CFR 25.30(h) that this action is of a type that does not individually or cumulatively have a significant effect on the human environment. Therefore, neither an environmental assessment nor an environmental impact statement is required.

V. Analysis of Impacts and Initial Regulatory Flexibility Analysis

FDA has examined the impacts of the proposed rule under Executive Order 12866, under the Regulatory Flexibility Act (5 U.S.C. 601–612) (as amended by subtitle D of the Small Business Regulatory Fairness Act of 1996 (Public Law 104–121)), and under the Unfunded Mandates Reform Act (UMRA) (Public Law 104–4). Executive Order 12866 directs agencies to assess all costs and benefits of available regulatory alternatives and, when regulation is necessary, to select regulatory approaches that maximize net benefits (including potential economic, environmental, public health and safety, and other advantages; distributive impacts; and equity). The Regulatory Flexibility Act requires agencies to analyze whether a rule may have a significant impact on a substantial number of small entities and, if it does, to analyze regulatory options that would minimize the impact. The UMRA requires that agencies prepare a written statement under section 202(a) of UMRA of

anticipated costs and benefits before proposing any rule that may result in an expenditure by State, local, and tribal governments, in the aggregate, or by the private sector, of $100 million (adjusted annually for inflation) in any one year.

The agency believes that this final rule is consistent with the principles identified in Executive Order 12866. OMB has determined that the final rule is a significant regulatory action as defined by the Executive Order and so is subject to review. Because the rule does not impose mandates on State, local, or tribal governments, or the private sector, that will result in an expenditure in any one year of $100 million or more, FDA is not required to perform a cost-benefit analysis according to the Unfunded Mandates Reform Act. Aggregate impacts of the rule, and aggregate expenditures caused by the rule, will not approach $100 million for either the public or the private sector. As discussed below, because of the limited information that can be used to characterize the entities that may qualify as small businesses, the impact on small business establishments is uncertain. FDA has therefore prepared an Initial Regulatory Flexibility Analysis.

A. Background

In the discussion that follows, FDA will describe the purpose and requirements of the proposed rule, the estimated number of entities that will be affected, the estimated cost of compliance with the rule per IND, and a summary of estimated annual costs to industry.

The purpose of the proposed rule is to make available for public disclosure and to require submission in redacted version for public disclosure, certain data and information related to human gene therapy and xenotransplantation investigations. These areas of clinical investigation have the potential for unique public health risks and modification of the human genome. The public health and safety risks require that FDA be able to make timely disclosures of adverse outcomes, such as the development of novel infectious agents, unanticipated alterations of a recipient's germline, and severe toxicity resulting from the therapy, in order to prevent or contain further adverse occurrences.

These therapeutic research areas will effectively transform participating recipients into life-long research subjects. The length of commitment, coupled with the magnitude of potential risks to the recipients, their families and community, will present new challenges for risk assessment and the adequacy of informed consent. As noted earlier, these investigative approaches raise new challenges for Institutional Review Boards. The novelty and extent of the risk issues will call for expanded public access to clinical trial information relevant to assessment of risks and benefits, and public education and informed consent. These public information needs can only be addressed through disclosure of relevant information about the proposed and ongoing investigations.

The information to come under this disclosure regulation includes: (1) Product and patient safety data and related information including results of preclinical and clinical studies and tests that demonstrate the safety and/or feasibility of the proposed procedures; (2) the name and address of the sponsor; (3) the clinical indications to be studied; (4) the protocol for each planned study to include a scientific abstract and a nontechnical abstract, a statement of the objectives, purpose, and rationale of the study, the name and address of each investigator and subinvestigator, the name and address of the official contacts of each local review body as appropriate (IRB, IBC) and the dated copies of approval by each group, the criteria for patient selection and exclusion, an estimate of the number of patients to be studied, and a description of the treatment that will be administered to patients, and the clinical procedures, laboratory tests, or other measures to be taken to monitor the safety and effects of the drug in human subjects and to minimize risk; (5) the informed consent documentation; (6) the identification of the biological product(s) and a general description of the method of production, including a description of product features that may affect patient safety; (7) the IND safety reports; (8) the information submitted to FDA in the annual report; (9) the regulatory status of the investigation, the date of an action, and the reason for an action; (10) and other relevant data and information that the Director, CBER, determines are necessary for the appropriate consideration of the public health and scientific issues, including relevant ethical issues, raised by human gene therapy or xenotransplantation. After a license has been issued, all safety and effectiveness data and information in the biological product file are immediately available for public disclosure unless extraordinary circumstances are shown (§ 601.51(e)(1)).

The sponsor of an IND involving human gene therapy or xenotransplantation will be required to submit this information in redacted version for public disclosure, removing all information that would be defined as trade secret, or personal information. The redacted submissions would be as follows:

1. Redacted version of information as defined under § 601.52 at the time of the initial IND submission.

2. Redacted version of any amendment documenting changes or additions to the information defined under § 601.52, at the time the amendment goes into effect.

3. Redacted version of IND safety reports at the time of submission of the initial report.

4. Redacted version of the annual progress report within 60 days of the anniversary date that the IND went into effect.

The redacted version would be submitted in a form that is readily identifiable and separable from the original unabridged submission to FDA.

The proposed rule will affect sponsors of human gene therapy or xenotransplantation clinical trials. The agency estimates that, at any one time, a total of 147 sponsors will be affected by the proposed rule. This includes 134 sponsors that have submitted IND's in the area of human gene therapy, and an additional 13 sponsors that have submitted IND's for clinical trials involving xenotransplantation. The number of new IND's per year in these two research areas has remained relatively constant at the level of approximately 45 IND submissions per year, for the past several years.

B. Cost Impact

Certain types of information have a substantial commercial value. This value may be particularly high for data pertaining to specific business plans, strategies, or lines of scientific research. The required disclosure of such information, however, imposes no economic impact where the relevant data are already available to competitors. As discussed earlier in this preamble, information that would be disclosed under this proposed rule is routinely examined and discussed by the RAC, in the case of gene therapy, and discussed at other public meetings addressing xenotransplantation issues, or through public filings with the SEC. Because the information proposed for disclosure has not been treated as confidential by industry, FDA finds that there is minimal incremental commercial value associated with the information that may be disclosed. The agency has, therefore, not attributed regulatory costs to its disclosure. The

agency requests public comment on the validity of this view.

The proposed rule will require additional paperwork activities for affected firms. The primary impact on clinical trial sponsors will be the requirement for additional staff time to redact IND-related submissions, throughout the period in which the IND is active. Table 1 of this document provides a summary of the types of submissions that will be required for public disclosure and the estimated number of such submissions that FDA expects to receive each year across all active IND's in the areas of human gene therapy and xenotransplantation. The estimated time required per redacted submission is also shown in table 1. The numbers of submissions and redaction times are estimated by FDA staff involved in application review, based on their experience in recent years, and their familiarity with the content of the IND packages. The redaction is assumed to be performed by a relatively senior member of the scientific research staff at a sponsoring organization. The cost per hour of staff time is estimated to be approximately $38, based on the Bureau of Labor Statistics estimate of total hourly compensation for professional white-collar workers in the private goods-producing and service producing industries.[3] The redacted documents listed in table 1 reflect a series of submissions that would typically occur over several years. Based on FDA's estimate of the total volume of submissions of each type per year, the agency estimates that the total cost to the industry will be approximately $123,880 [$41,040+$5,130+$1,710+$76,000]. This yields an average annual cost of $843 per sponsor [$123,880/147].

TABLE 1.—ESTIMATES OF COST PER YEAR FOR INDUSTRY-WIDE REDACTION EFFORTS

Type of Redacted Submission	Total Industry Submissions per Year	Average Redaction Time/Submission	Estimated Industry Cost per Year
New IND[1]—initial and authorized version	45	24 hours	$41,040 [45 x 24 x $38]
IND amendments	270	0.5 hour	$5,130 [270 x 0.5 x $38]
IND safety reports	90	0.5 hour	$1,170 [90 x 0.5 x $38]
Annual reports	100	20 hours	$76,000 [100 x 20 x $38]
Total Annual Cost to Industry			$123,880
Average Annual Cost Per Sponsor (147 sponsors)			$843

[1] Investigational new drug application.

C. Benefits

Although human gene therapy offers the promise of more effective treatment, for diseases ranging from cystic fibrosis to human immunodeficiency virus (HIV), rapid progress and patient safety in research requires timely communication of new findings about the success or risks of candidate strategies. The key to success for any human gene therapy strategy is attaining a vector that can serve as a safe and efficient gene delivery vehicle (Ref. 5). In general, human gene therapy researchers work to maximize efficacy through the regulation of gene expression over long periods (Ref. 6). Simultaneous with this goal, researchers attempt to develop vectors and treatment strategies that will both minimize the patient's immune response (which counters the therapy) (Ref. 7) and minimize the toxicity of the gene therapy (Refs. 8 and 9). As different vectors are considered, it is critical that newly discovered risks be reported to alert other researchers considering similar vectors or developing therapies to treat similar conditions.

As described earlier, the importance of timely communication of risks is clearly demonstrated by the cystic fibrosis patient who developed an acute adverse event requiring intensive care after receiving an adenoviral vector. In this case, public discussion of the adverse event at the RAC meeting facilitated rapid dissemination of important information about this toxicity, thereby contributing to the safety of patients in other gene therapy trials.

For xenotransplantation, the disclosure of information is necessary for public education and more efficient product and recipient tracking. Communication of risks offers other benefits for recipients of xenotransplantation products, their families, and their communities. According to a recent World Health Organization report on xenotransplantation, ''The practice of xenotransplantation carries with it an unquantifiable risk of xenozoonotic infection and disease. Measures are required to minimize risk and maximize safety in the potential use of this technology'' (Ref. 10). The level of risk is particularly difficult to quantify since potential viruses may be unknown and ''silent'' in the donor species; that is, they may not be identified through the currently available battery of screening tests for known pathogens. In addition, the risk of infection in the recipient of a xenotransplantation product may be substantially increased as a result of the immunosuppressive drug therapy administered to prevent rejection of the transplanted xenotransplantation product.

New evidence supporting the possibility of this risk is reported in a recent study (Ref. 11) showing that pig pancreatic islets transplanted into severely immunodeficient mice produce porcine endogenous retroviruses (PERV) that can infect human cells that had been transplanted into the same mice receiving the porcine pancreatic cells. Although pigs are considered a promising alternative source of organs for xenotransplantation, this study found that the PERV were trancriptionally active and infectious cross-species in vivo after xenotransplantation of the pig tissues. These findings bolster earlier concerns about PERV infection from pig islet

[3] U.S. Dept of Labor, Bureau of Labor Statistics, Employer Costs for Employee Compensation, March 1997.

xenotransplantation in immunosuppressed human patients.

Recent experience with zoonotic viruses has demonstrated the potential lethality of these viruses. An example is the 1998 to 1999 outbreak of a hendra-like virus in Malaysia and Singapore (Ref. 12). Documented cases occurred primarily among adults who had come in close contact with swine, which also showed signs of the illness. In some instances, illness in the pigs had occurred 1 to 2 weeks before illness in the humans. Illness in humans was characterized by 3 to 14 days of fever and headache followed by drowsiness and disorientation that often progressed to coma within 24 to 48 hours. During the period September 1998 to April 1999, 229 human cases were reported, 111 of which (48 percent) resulted in death. Although the first cases of human illness were reported in September 1998, the type and source of infection was initially unknown, so human exposures continued to occur, with the peak number of new cases occurring 6 months later, in March 1999. Once the type of virus was identified, through laboratory testing, and the source of infection (i.e., exposure to pigs) was serologically confirmed, public health measures were taken to prevent further outbreaks.

Ebola hemorrhagic fever is another disease that is transferable from animals to humans (Ref. 13) and consequently illustrates the importance of timely tracking of and public communication about zoonotic viruses. In the period from January to July 1995, a total of 316 persons became ill with hemorrhagic fever in Kikwit, Democratic Republic of the Congo (DRC) (Ref. 14). During the epidemic, a mortality rate of 60 to 80 percent was reported among hospital cases. After an incubation period of approximately 7 days, the early clinical features of the disease included fever, headache, sore throat, diarrhea and myalgias, followed by vomiting, worsening diarrhea, oliguria, shock and death after 7 to 14 days. In May of 1995, the month of peak onset of new cases, the DRC requested international assistance in investigating the cause of the outbreak. Laboratory testing by the Centers for Disease Control and Prevention (CDC) confirmed the presence of the Zaire subtype of Ebola hemorrhagic fever. Continued investigation and testing enabled the international team to identify modes of transmission and to specify the precautions necessary to prevent further spread of the virus. According to the CDC, prompt laboratory diagnosis is an essential component of the surveillance needed to maximize Ebola prevention and control measures (Ref. 15). In this instance, the lack of early detection and proper management of Ebola hemorrhagic fever patients resulted in numerous deaths among both health care personnel and patients (Rollin and Ksiazek, 1998). By hastening the disclosure of important risk information, the proposed rule would assist public health agencies and health care providers in more rapidly identifying and controlling any zoonotic viruses that might emerge following xenotransplantation.

As of April 1999, the United Network for Organ Sharing (UNOS) reported a total of 62,443 patients on the waiting list for an organ transplant. This number far exceeds the total of approximately 20,000 transplants performed each year (Ref. 16). In addition to bolstering the supply of viable organ transplants, patients may also benefit from cellular and tissue therapies involving a xenotransplantation product. Although the potential to fill unmet needs is great, the number of prospective xenotransplant recipients represents a sizeable population at potential risk of zoonotic infection. The proposed data disclosures would help to provide the information needed by the public to understand, manage, and minimize the risks associated with these advancing medical technologies.

D. Impact on Small Entities

The agency has only limited information to estimate the number of small entities conducting clinical investigations of human gene therapy or xenotransplantation. As indicated in the cost analysis, the overall number of business entities sponsoring clinical trials is estimated to be 147. Although a few companies are a part of larger firms, many others may have annual revenues of less than $5 million, which is the revenue level that identifies a small business, according to the Small Business Administration. The estimated cost impact of $843 per sponsor per year reflects the staff time that would need to be allocated to produce redacted versions of the specified documents for the purpose of public disclosure.

The proposed rule offers sponsors considerable flexibility in implementation by allowing for a range of approaches for preparing a redacted version. Under the proposed rule, acceptable approaches range from submitting a ''marked up'' version of the original that simply obscures the information not to be disclosed, to development of a separate document that abstracts the needed information for the public from the original unabridged version submitted to FDA. This flexibility will help to minimize the cost impact.

The agency does not anticipate that the estimated cost will significantly burden any of the sponsors. However, because of the limited information available for establishments sponsoring clinical trials in human gene therapy and xenotransplantation, and its importance in developing estimates of the small entity impact, the agency requests detailed comment on the number and type of businesses sponsoring clinical trials in human gene therapy or xenotransplantation, and the expected impact of the proposed requirements on these entities.

In developing the proposed rule, the agency considered but rejected two alternatives that might impose less burden on small businesses. The agency found, however, that these alternatives would be less effective in supporting the advancement of this research, because of unanswered concerns regarding patient safety and public health. One of the alternatives considered involved voluntary disclosure by clinical trial sponsors without a regulatory requirement. This alternative would reduce costs to industry only if establishments failed to voluntarily provide the needed information for disclosure. Moreover, while voluntary provision of this information would be no less burdensome for industry, it could prove inadequate in protecting public health, because the agency would have no means of assuring the quality and consistency of the content of the voluntarily disclosed information, or the timeliness of its reporting. The disclosure of timely, accurate, and complete information is critical to an appropriate agency response to adverse outcomes, including the emergence of novel and potentially life-threatening infectious agents, or the alteration of the germline in patients participating in the clinical study. Also, voluntary disclosure provides no means for the agency to ensure a balanced dissemination of information on identified risks and benefits. Such balance is central to an adequate public understanding of the technologies, and to an informed public discussion of the overall risk versus benefit to patients and communities.

A second alternative to the proposed rule would require disclosure, but would have FDA assume the sole responsibility for redaction of documents submitted by the sponsor. Although this alternative would reduce the direct cost impact for sponsors, the limited number of agency staff available to perform this task would introduce the risk of delay in producing the redacted

version for public disclosure. This outcome could potentially result in delaying the research, or delaying the timely public availability of critical information.

VI. References

The following references have been placed on display in the Dockets Management Branch and may be seen by interested persons between 9 a.m. and 4 p.m., Monday through Friday.

1. Eastland, T., ''Infectious disease transmission through cell, tissue and organ transplantation: reducing the risk through donor selection,'' *Cell Transplantation* vol 4. pp. 455–477, 1995.
2. Delmonico, F. L. and D. R. Snydman, ''Organ donor screening for infectious diseases'' *Transplantation*, vol. 65, pp. 603–610, 1998.
3. Regamey, N., M. Tamm, M. Wernil, A. Witschi, G. Thiel, G. Cathomas, and P. Erb, ''Tranmission of human herpesvirus 8 infection from renal-transplant donors to recipients.'' *New England Journal of Medicine*, vol. 339, pp.1358–1363, 1998.
4. ''Guidelines for Research Involving Recombinant DNA Molecules,'' Appendix M–Points to Consider in the Design and Submission of Protocols for the Transfer of Recombinant DNA Molecules into One or More Human Subjects (PTC), http://www4.od.nih.gov/oba/guidelines.html.
5. Friedmann, T., ''Overcoming the Obstacles to Gene Therapy,'' *Scientific American*, vol. 276, No. 6, pp. 96–101, June 1997.
6. Haberman, R. P., T. J. McCown, and R. J. Samulski, ''Inducible Long-Term Gene Expression in Brain With Adeno-Associated Virus Gene Transfer,'' *Gene Therapy*, vol. 5, No. 12, pp. 1604–1611, December 1998.
7. Middleton, P. G. and E. W. F. W. Alton, ''Gene Therapy for Cystic Fibrosis: Which Postman, Which Box?'' *Thorax*, vol. 53, No. 3, pp. 197–199, March 1998.
8. Krisky, D. M., D. Wolfe, W. F. Goins, P. C. Marconi, R. Ramakrishnan, M. Mata, R. J. D. Rouse, D. J. Fink, and J. C. Glorioso, ''Deletion of Multiple Immediate-Early Genes From Herpes Simplex Virus Reduces Cytotoxicity and Permits Long-Term Gene Expression in Neurons,'' *Gene Therapy*, vol. 5, No. 12, pp. 1593–1603, December 1998.
9. Yang, E.Y., D. L. Cass, K. G. Sylvester, J. M. Wilson, and N. S. Adzick, ''Fetal Gene Therapy: Efficacy, Toxicity, and Immunologic Effects of Early Gestation Recombinant Adenovirus,'' *Journal of Pediatric Surgery*, vol. 34, No. 2, pp. 235–241, February 1999.
10. *Report of WHO Consultation on Xenotransplantation*, World Health Organization, Emerging and other Communicable Diseases Surveillance and Control, Geneva, Switzerland, pp. 28–30, October 1997.
11. Van der Laan, L. J., C. Lockey, B. C. Griffeth, F. S. Frasier, C. A. Wilson, D. E. Onions, B. J. Hering, Z. Long, E. Otto, B. E. Torbett, D. R. Salomon, ''Infection by Porcine Endogenous Retrovirus After Islet Xenotransplantation in SCID Mice,'' *Nature*, vol. 407 (6800), pp. 90–94, September 7, 2000.
12. U.S. Department of Health and Human Services, Centers for Disease Control, ''Outbreak of Hendra-Like Virus—Malaysia and Singapore, 1998–1999,'' *Morbidity and Mortality Weekly Report*, vol. 48, No. 13, April 9, 1999.
13. Rollin, P. E. and T. G. Ksiazek, ''Ebola Haemorrhagic Fever,'' *Transactions of the Royal Society of Tropical Medicine and Hygiene*, vol. 92, pp. 1–2, 1998.
14. Roels, T. H., A. S. Bloom, J. Buffington, G. L. Muhumgu, W. R. MacKenzie, A. S. Khan, R. Ndambi, D. L. Noah, H. R. Rolka, C. J. Peters, and T. G. Ksiazek, ''Ebola Hemorrhagic Fever, Kikwit, Democratic Republic of the Congo, 1995: Risk Factors for Patients with a Reported Exposure,'' *The Journal of Infectious Diseases*, vol. 179 Supplement 1:S92–97, 1999.
15. Centers for Disease Control, ''Update: Outbreak of Ebola Viral Hemorrhagic Fever—Zaire 1995,'' *Journal of the American Medical Association*, vol. 274, No. 5, August 1995.
16. *U.S. Facts About Transplantation*, UNOS, (c) 1998, http://www.unos.org/newsroom/critdata_main.htm.

VII. The Paperwork Reduction Act of 1995

This proposed rule contains information collection provisions that are subject to review by OMB under the Paperwork Reduction Act of 1995 (44 U.S.C. 3501–3520). The title, description, and respondent description of the information collection provisions are shown below with an estimate of the annual reporting burden. Included in the estimate is the time for reviewing instructions, searching existing data sources, gathering and maintaining the data needed, and completing and reviewing each collection of information.

FDA invites comments on: (1) Whether the proposed collection of information is necessary for the proper performance of FDA's functions, including whether the information will have a practical utility; (2) the accuracy of FDA's estimate of the burden of the proposed collection of information, including the validity of the methodology and assumptions used; (3) ways to enhance the quality, utility, and clarity of the information to be collected; and (4) ways to minimize the burden of the collection of information on respondents, including through the use of automated collection techniques, when appropriate, and other forms of information technology.

Title: Submission to FDA for Public Disclosure of Certain Data and Information Related to Human Gene Therapy or Xenotransplantation.

Description: FDA is proposing new regulations to require that sponsors of IND's involving human gene therapy or xenotransplantation submit information related to the IND in redacted version for public disclosure, removing all information that would be defined as trade secret or personal information whose disclosure would constitute a clearly unwarranted invasion of privacy, and certain confidential commercial information. Each submission for public disclosure would be accompanied by a statement, signed by a responsible person, that the information has been suitably redacted. FDA would then publicly disclose the redacted version to provide an opportunity for public education, discussion, and consideration of public health and safety issues, as well as consideration of societal and ethical issues.

FDA is also proposing to require that the sponsor submit any copyrighted material in a single appendix to each redacted version and any copyrighted material whose copyright is not owned by the sponsor not be included in any other section of the redacted version. The proposal would further require that the redacted version include a bibliography of the copyrighted material contained in the appendix. This provision would facilitate the timely public disclosure of the redacted version on the Internet, with the copyrighted information excluded. Making available copyrighted material on the Internet is not considered ''fair use'' of copyrighted material.

Description of Respondents: Sponsors of clinical investigations involving human gene therapy or xenotransplantation.

FDA has estimated the burden for each provision that describes a collection of information. The estimates are based on FDA's experience in reviewing IND submissions and in redacting documents related to an IND.

Under proposed § 601.53(b), approximately 147 sponsors of clinical investigations involving human gene therapy (134 sponsors) and xenotransplantation (13 sponsors) would be required to submit a redacted version of certain documents under the IND. For all 147 sponsors, these documents include the original IND (45 submissions/year), amendments to an IND (270 submissions/year), IND safety reports (90 submissions/year), and annual reports (100 submissions/year) for an estimated total of 505 submissions/year (45 + 270 + 90 + 100). FDA has estimated the time necessary to copy and redact each of the above types of submissions; i.e., IND submission, 24 hours/submission; amendments, .5 hour/per submission; IND safety reports, .5 hour/submission; and annual reports, 20 hours/submission. The total burden equals the sum of the burdens estimated for each type of submission (45x24 +

270x.5 + 90x.5 + 100x20 equals 3,260 hours).

Under § 601.53(c) all submissions under § 601.53(b) must be readily separable from the original submission and clearly marked on each page as suitable for disclosure. Under § 601.53(d) of the proposed rule, sponsors of human gene theraphy and xenotransplantation clinical studies would be required to submit copyrighted material in a single appendix to each redacted submission and include in the redacted version a bibliography of these materials. The hours per response, therefore, are an average estimate of the total time for redaction of the document, separation of copyrighted material and preparation of a bibliography, marking of each page as suitable for public disclosure, and submission to FDA, as provided in § 601.53(b), (c), and (d). The information collection burdens associated with the submission of an IND as provided in part 312 are approved by OMB under OMB control number 0910–0014.

TABLE 2.—ESTIMATED ANNUAL REPORTING BURDEN [1]

21 CFR Section	No. of Respondents	Annual Frequency per Response	Total Annual Responses	Hours per Response	Total Hours
601.53(b), (c), and (d)	147	3.4	505	6.5	3,282

[1] There are no capital costs and maintenance costs associated with this collection of information.

In compliance with section 3507(d) of the Paperwork Reduction Act of 1995 (44 U.S.C. 3507(d)), FDA has submitted the information collection provisions of this proposed rule to OMB for review. Interested persons may submit comments on the information collection requirements of this proposal by February 20, 2001, to the Office of Information and Regulatory Affairs, OMB, New Executive Office Bldg., 725 17th St. NW., Washington, DC 20503, Attn: Desk Officer for FDA.

VIII. Proposed Effective Dates

FDA proposes that any final rule that may issue based on this proposal become effective 90 days after the date of its publication in the **Federal Register**. On or after that date, sponsors of human gene therapy or xenotransplantation clinical trials would be required to submit a redacted version of the data and information specified in the final rule as part of a submission into an IND. Sponsors may voluntarily submit a redacted version immediately upon the date of issuance of the final rule. FDA is proposing, for sponsors of xenotransplantation clinical trials who have submitted an IND prior to the effective date of the final rule, that the sponsor submit for public disclosure a redacted version of the information held under the IND, to contain the information specified in proposed § 601.52. FDA invites comment on the length of time after issuance of the final rule that these sponsors should be provided to submit the redacted information.

IX. Request for Comments

Interested persons may submit to the Dockets Management Branch (address above) written comments regarding this proposal by April 18, 2001. Two copies of any comments are to be submitted, except that individuals may submit one copy. Comments are to be identified with the docket number found in brackets in the heading of this document. Submit written comments on the information collection provisions by February 20, 2001. Received comments may be seen in the Dockets Management Branch between 9 a.m. and 4 p.m., Monday through Friday.

List of Subjects

21 CFR Part 20

Confidential business information, Courts, Freedom of information, Government employees.

21 CFR Part 312

Drugs, Exports, Imports, Investigations, Labeling, Medical research, Reporting and recordkeeping requirements, Safety.

21 CFR Part 601

Administrative practice and procedure, Biologics, Confidential business information.

Therefore, under the Federal Food, Drug, and Cosmetic Act and under authority delegated to the Commissioner of Food and Drugs, it is proposed that 21 CFR parts 20, 312, and 601 be amended as follows:

PART 20—PUBLIC INFORMATION

1. The authority citation for part 20 continues to read as follows:

Authority: 5 U.S.C. 552; 18 U.S.C. 1905; 19 U.S.C. 2531–2582; 21 U.S.C. 321–393, 1401–1403; 42 U.S.C. 241, 242, 242a, 242l, 242n, 243, 262, 263, 263b–263n, 264, 265, 300u–300u–5, 300aa–1.

2. Section 20.100 is amended by adding paragraph (c)(43) to read as follows:

§ 20.100 Applicability; cross-reference to other regulations.

* * * * *

(c) * * *

(43) Data and information submitted related to human gene therapy or xenotransplantation, in § 601.52 of this chapter.

PART 312—INVESTIGATIONAL NEW DRUG APPLICATION

3. The authority citation for part 312 continues to read as follows:

Authority: 21 U.S.C. 321, 331, 351, 352, 353, 355, 371; 42 U.S.C. 262.

4. Section 312.42 is amended by adding paragraph (b)(7) to read as follows:

§ 312.42 Clinical holds and requests for modification.

* * * * *

(b) * * *

(7) *Clinical hold of any investigation, as defined in § 601.52 of this chapter, involving human gene therapy or xenotransplantation.* FDA may place a proposed or ongoing investigation, as defined in § 601.52 of this chapter, involving human gene therapy or xenotransplantation on clinical hold if it is determined that:

(i) Any of the conditions in paragraph (b)(1) or (b)(2) of this section apply; or

(ii) The sponsor has not submitted a redacted version of the data and information, as specified in § 601.52 of this chapter, for public disclosure that complies with the requirements of § 601.53 of this chapter.

* * * * *

5. Section 312.130 is amended by revising paragraph (b) to read as follows:

§ 312.130 Availability for public disclosure of data and information in an IND.

* * * * *

(b) The availability for public disclosure of all data and information in an investigational new drug application for a new drug or antibiotic drug will be handled in accordance with the provisions established in § 314.430 of

this chapter for the confidentiality of data and information in applications submitted in part 314 of this chapter. The availability for public disclosure of all data and information in an investigational new drug application for a biological product will be governed by the provisions of §§ 601.50, 601.51, and 601.52 of this chapter.

* * * * *

PART 601—LICENSING

6. The authority citation for part 601 continues to read as follows:

Authority: 15 U.S.C. 1451–1561; 21 U.S.C. 321, 351, 352, 353, 355, 360, 360c–360f, 360h–360j, 371, 374, 379e, 381; 42 U.S.C. 216, 241, 262, 263; sec. 122, Pub. L. 105–115, 111 Stat. 2322 (21 U.S.C. 355 note).

7. Section 601.50 is amended by revising the section heading and paragraph (a) to read as follows:

§ 601.50 Confidentiality of data and information in an investigational new drug application for a biological product.

(a) Except as provided in § 601.52, the existence of an IND application for a biological product will not be disclosed by the Food and Drug Administration unless it has previously been publicly disclosed or acknowledged.

* * * * *

8. Section 601.51 is amended by revising the section heading and paragraph (a) to read as follows:

§ 601.51 Confidentiality of data and information in a biologics license application.

(a) For purposes of this section the *biological product file* includes all data and information submitted with or incorporated by reference in any biologics license application, IND's incorporated in any such application, master files, and other related submissions. Except as provided in § 601.52, the availability for public disclosure of any record in the biological product file shall be handled in accordance with the provisions of this section.

* * * * *

9. Section 601.52 is added to subpart F to read as follows:

§ 601.52 Availability for public disclosure of certain data and information related to an IND concerning human gene therapy or xenotransplantation.

(a) *Definitions*. The following definitions of terms apply to this section:

(1) *Human gene therapy* means the administration of genetic material in order to modify or manipulate the expression of a gene product or to alter the biological properties of living cells for therapeutic use. Cells may be modified ex vivo for subsequent administration or altered in vivo by gene therapy products given directly to the subject.

(2) *Xenotransplantation* means any procedure that involves the transplantation, implantation, or infusion into a human recipient of either: Live cells, tissues, or organs from a nonhuman animal source; or human body fluids, cells, tissues, or organs that have had ex vivo contact with live nonhuman animal cells, tissues, or organs.

(b) *Scope*. Except as otherwise provided in this section, the availability for public disclosure of data and information related to human gene therapy or xenotransplantation shall be in accordance with §§ 601.50 and 601.51.

(c) *Information for public disclosure*. FDA will make available for public disclosure the following types of data and information related to an IND concerning human gene therapy or xenotransplantation. Names and other personal identifiers of patients and, except as specifically provided in this section, names and personal identifiers of and third party, such as physicians or hospitals, will not be made available for public disclosure.

(1) Product and patient safety data and related information. For purposes of this section product and patient safety data and related information include results of preclinical and clinical studies and tests that demonstrate the safety and/or feasibility of the proposed procedures. This may include, but is not necessarily limited to, analysis in animals, humans, or in vitro systems of gene transfer, expression, and persistence; vector biodistribution; evidence for immune response/anergy; biological activity; and results of product safety testing including testing for known xenogeneic and human infectious agents and replication competent virus; and qualification of source herd, individual source animal, and source organ/tissue/cells for xenotransplantation in humans. Also included is information on monitoring or prevention of potential health risks to the recipient, close contacts, and health care workers, such as patient monitoring for replication competent retrovirus and viral shedding and measures taken to prevent transmission of infectious disease. The availability for public disclosure of data and information in an IND safety report or annual report, as provided under §§ 312.32 and 312.33 of this chapter, will be governed by the provisions of paragraphs (c)(7) and (c)(8) of this section.

(2) The name and address of the sponsor.

(3) The clinical indications to be studied.

(4) A protocol for each planned study, to include:

(i) A scientific abstract and a nontechnical abstract.

(ii) A statement of the objectives, purpose, and rationale of the study.

(iii) The name and address of each investigator.

(iv) The name and address of the official contacts of each local review body as appropriate (Institutional Review Board, Institutional Biosafety Committee) and the dated copies of each committee's approval of the study.

(v) The criteria for patient selection and exclusion and an estimate of the number of patients to be studied.

(vi) A description of the treatment that will be administered to patients and the clinical procedures, laboratory tests, or other measures to be taken to monitor the safety and effects of the drug in human subjects and to minimize risk.

(5) Written informed consent form(s) as provided in § 50.27 of this chapter.

(6) Identification of the biological product(s) and a general description of the method of production, including a description of product features that may affect patient safety. The information shall include, as applicable, the vector name and type; gene insert; regulatory elements and their source; intended target cells; source of cells, tissues, or organ(s); method used to prepare the vector containing cells; method used to procure and prepare cells, tissues, or organs for xenotransplantation; purity of cells; adventitious agent testing; description of the delivery system; ancillary products used during production; herd colony and individual source animal health maintenance and surveillance records; and biological specimens to be archived from source animals.

(7) IND safety reports, as provided in § 312.32 of this chapter, and other similar data and information.

(8) Information submitted in the annual report to include, as applicable, assessment of evidence of gene transfer, gene expression in target cells, biological activity, immune response, status of autopsy request and evidence of gene transfer and gonadal distribution upon autopsy, results from assessment for evidence of infection by agents associated with the product, adverse experiences, and a list of subjects who died during participation in the investigation, with the cause of death for each subject.

(9) The regulatory status of the IND, such as on hold, in effect, inactive, or

withdrawn, the dates of these actions, and the reasons for these actions.

(10) Other relevant data and information that the Director, CBER, determines are necessary for the appropriate consideration of the public health and scientific issues, including relevant ethical issues, raised by human gene therapy or xenotransplantation.

10. Section 601.53 is added to subpart F to read as follows:

§ 601.53 Submission of certain data and information related to human gene therapy or xenotransplantation for public disclosure.

(a) A sponsor of an IND shall submit to FDA for public disclosure in a redacted version the submissions identified in paragraphs (b)(1) through (b)(5) of this section. Each submission shall include all applicable information identified as disclosable in § 601.52, but shall be redacted to remove or obscure all information considered confidential as a trade secret, certain confidential commercial information, such as information regarding commercial licensing agreements or the identification of suppliers, and names and other personal identifiers of patients and, except as specifically provided in this section, names and personal identifiers of any third party, such as physicians or hospitals, must be redacted.

(b) The following shall be submitted in a suitably redacted version and in duplicate at the time points noted:

(1) Information as defined under § 601.52 at the time of initial IND submission.

(2) Any amendment documenting changes or additions to the information as defined under § 601.52 at the time the amendment goes into effect.

(3) IND safety reports at the time of submission of the initial report to FDA.

(4) The annual report, within 60 days of the anniversary date that the IND went into effect, in accordance with § 312.33 of this chapter.

(5) Other information upon the specific request of the Director, CBER.

(c) The submissions identified in paragraph (b) of this section shall be submitted in a form readily separable from the original unabridged submission to FDA and clearly marked on each page of the redacted version as suitable for public disclosure.

(d) Any copies of copyrighted material shall be submitted in a single appendix to each redacted version. Copyrighted materials whose copyright is not owned by the applicant shall not be included in any other section of the redacted versions. A bibliography of copyrighted materials contained in the appendix shall be included as part of each redacted version.

(e) Any data or information submitted to FDA as a redacted version for public disclosure in accordance with paragraph (a) of this section shall be accompanied by the following statement signed by a responsible individual:

The information contained herein has been redacted for public disclosure. The only material removed from these records is: Confidential commercial or trade secret information exempt from disclosure under the Freedom of Information Act (5 U.S.C. 552 (b)(4)) and the Food and Drug Administration's implementing regulations (21 CFR 20.61); names and other personal identifiers of patients and, except as specifically provided in the regulations, names and other personal identifiers of any third party.

I declare, under the penalty of perjury, that the foregoing is true and correct.

Dated: December 20, 2000.

Jane E. Henney,

Commissioner of Food and Drugs.

Donna E. Shalala,

Secretary of Health and Human Services.

[FR Doc. 01–1048 Filed 1–17–01; 8:45 am]

BILLING CODE 4160–01–F

DEPARTMENT OF HEALTH AND HUMAN SERVICES

Food and Drug Administration

21 CFR Parts 192 and 592

[Docket No. 00N–1396]

RIN 0910–AC15

Premarket Notice Concerning Bioengineered Foods

AGENCY: Food and Drug Administration, HHS.

ACTION: Proposed rule.

SUMMARY: The Food and Drug Administration (FDA) is proposing to require the submission to the agency of data and information regarding plant-derived bioengineered foods that would be consumed by humans or animals. FDA is proposing that this submission be made at least 120 days prior to the commercial distribution of such foods. FDA is taking this action to ensure that it has the appropriate amount of information about bioengineered foods to help to ensure that all market entry decisions by the industry are made consistently and in full compliance with the law. The proposed action will permit the agency to assess on an ongoing basis whether plant-derived bioengineered foods comply with the standards of the Federal Food, Drug, and Cosmetic Act (the act).

DATES: Submit written comments on the proposed rule by April 3, 2001. Submit written comments on the information collection provisions by February 20, 2001.

See section XIV of this document for the proposed effective date of a final rule based on this document.

ADDRESSES: Submit written comments to the Dockets Management Branch (HFA–305), Food and Drug Administration, 5630 Fishers Lane, rm. 1061, Rockville, MD 20852. Submit written comments on the information collection provisions to the Office of Information and Regulatory Affairs, OMB, New Executive Office Bldg., 725 17th St. NW., rm. 10235, Washington, DC 20503, Attn: Desk Officer for FDA.

FOR FURTHER INFORMATION CONTACT:

Regarding human food issues: Linda S. Kahl, Center for Food Safety and Applied Nutrition (HFS–206), Food and Drug Administration, 200 C St. SW., Washington, DC 20204, 202–418–3101.

Regarding animal feed issues: William D. Price, Center for Veterinary Medicine (CVM) (HFV–200), Food and Drug Administration, 7500 Standish Pl., Rockville, MD 20855, 301–827–6652.

SUPPLEMENTARY INFORMATION:

Table of Contents

I. Background
A. The 1992 Policy
B. Consultations Under the 1992 Policy and the 1996 Procedures
C. Public Meetings
II. Legal Authority
III. Scope
IV. Definitions
V. Requirement for Premarket Biotechnology Notice
A. Foods That Are Subject to the Requirement
B. Origin of Data and Information
C. Timing
VI. Recommendation for Presubmission Consultation
A. Presubmission Consultation Program
B. Public Disclosure
C. Standard Procedures
VII. Premarket Biotechnology Notice: Administrative Information
A. Submissions to CFSAN for Use in Human Food, Animal Feed, or Both
B. Paper Copies
C. Electronic Copies
D. English Language Translations, Incorporation by Reference, and Available Guidance Documents
E. Opportunity to Withdraw
VIII. Premarket Biotechnology Notice: Required Parts
A. Part I: Letter

1. Statements Regarding the Notifier's Responsibility and the Balanced Nature of the Notice
2. Statements Regarding the Availability of Data and Information for FDA's Review
3. Statement Regarding Public Disclosure
B. Part II: Synopsis
C. Part III: Status at Other Federal Agencies and Foreign Governments
D. Part IV: Method of Development
E. Part V: Antibiotic Resistance
F. Part VI: Substances in the Food
1. Covered Substances
2. Identity, Function, Level, and Dietary Exposure
3. Allergenicity
4. Other Safety Issues
G. Part VII: Data and Information About the Food
1. Comparable Food
2. Historic Uses of the Comparable Food
3. Comparing the Composition and Characteristics of the Bioengineered Food to That of Comparable Food
4. Other Relevant Information
5. Narrative
IX. Agency Administration of a Premarket Biotechnology Notice
A. Filing Decision
B. Acknowledgment Letter
C. Response Letter
1. General Categories for FDA's Response
a. Letter That Extends FDA's Evaluation
b. Letter That the Notice Does Not Provide a Basis
c. Letter That FDA Has No Questions
d. Letter That a Notifier Has Withdrawn the Notice
2. Status of the Bioengineered Food at EPA
X. Public Disclosure
A. Existence of the Notice
B. Content of the Notice
C. Disclosure of FDA's Evaluation of, and Response to, a Notice
XI. Proposed Regulations Regarding Bioengineered Foods That Would Be Used in Animal Feed
XII. Paperwork Reduction Act
A. Hourly Burden to Prepare a Report (Proposed § 192.20(a) through (b)(1) and § 192.25
B. Hourly Reporting Burden Associated With Confidential Information in a Report (Proposed § 192.20(b)(2)(i) and (b)(2)(ii)
C. Hourly Reporting Burden Associated With Electronic Copies of the Report (Proposed § 192.20(c)(1) and (c)(2)
D. Hourly Reporting Burden Associated With English Language Translations, Authorization to Incorporate Information by Reference, and Withdrawal (Proposed § 192.20(d), (e), and (g)
E. Hourly Reporting Burden Associated With a Voluntary Presubmission Consultation Program (Proposed § 192.10(e) through (g), (h)(2), (h)(3)(i), and (h)(3)(ii)
F. Hourly Recordkeeping Burden (Proposed § 192.25(a)(2)
XIII. Analysis of Economic Impacts
A. Cost-Benefit Analysis
B. Background
1. Benefits
2. Costs
C. Regulatory Flexibility Act
D. Unfunded Mandates Reform Act
XIV. Effective Date
XV. Environmental Impact
XVI. Comments
XVII. References

I. Background

A. The 1992 Policy

In the **Federal Register** of May 29, 1992 (57 FR 22984), FDA published its ''Statement of Policy: Foods Derived From New Plant Varieties'' (the 1992 policy). The 1992 policy clarified the agency's interpretation of the application of the act with respect to human foods and animal feeds derived from new plant varieties, including varieties that are developed using recombinant deoxyribonucleic acid (rDNA) technology. This proposal refers to foods derived from plant varieties that are developed using in vitro manipulations of DNA (generally referred to as rDNA technology) as ''bioengineered foods.''

The 1992 policy provided guidance to industry on scientific and regulatory issues related to plant-derived foods, including bioengineered foods. In developing the 1992 policy as it relates to bioengineered foods, FDA focused on modifications to foods that were likely to result in commercial products and did not attempt to predict future changes in foods that could result from technological advances. Instead, FDA intended to modify its policy as circumstances warranted (57 FR 22984 at 22985).

In announcing the 1992 policy, FDA invited interested persons to submit written comments. Comments received from the scientific community generally have supported the scientific guidance articulated in the 1992 policy, including the scientific guidance as it relates to bioengineered foods. In addition, the views expressed by the members of FDA's Food Advisory Committee (Ref. 1) and the joint meeting of FDA's Food Advisory Committee and Veterinary Medicine Advisory Committee (Ref. 2), generally supported the scientific guidance in the 1992 policy.

However, many consumers, a number of public interest groups, and some State officials have expressed concern about or opposed the regulatory guidance articulated in the 1992 policy, particularly regarding the ability of the regulated industry to make market entry decisions. Frequently, those comments suggested, as an important adjunct to the 1992 policy, that FDA require an administrative process, such as premarket notification, to ensure that the agency remains aware of new bioengineered foods entering commercial distribution.[1]

FDA is confident that the guidance articulated in the 1992 policy adequately addressed both the scientific and regulatory issues raised by the products that were approaching commercialization in 1992. FDA is aware, however, that rDNA technology continues to evolve and that it is not possible for the agency to anticipate all of the novel scientific and regulatory issues that may arise as the number and types of foods developed using this technology expands. As discussed more fully below, this proposed rule would modify the regulatory guidance laid out in the 1992 policy by requiring the submission to the agency of data and information regarding plant-derived bioengineered foods at least 120 days prior to the commercial distribution of such foods.

B. Consultations Under the 1992 Policy and the 1996 Procedures

In the 1992 policy, FDA explained that, under the act, developers of new foods have a responsibility to ensure that the foods they offer to consumers are safe and in compliance with all requirements of the act (57 FR 22984 at 22985). In light of this responsibility, FDA has long regarded it to be a prudent practice for producers who use new technologies in the manufacture or development of foods and food ingredients to work cooperatively with FDA to ensure that the products of these new technologies are safe and comply with all applicable legal requirements (57 FR 22984 at 22991). Historically, the food industry generally has initiated consultation with FDA during the pioneer stages of a new technology, even if there is no legal obligation to do so. These consultations have served to make FDA aware of foods and food ingredients before these products are distributed commercially, and have provided FDA with the information necessary to address any questions regarding the safety, labeling, or regulatory status of the food or food ingredient. As such, these consultations have provided assistance to both industry and the agency in exercising their mutual responsibilities under the act.

In the 1992 policy, FDA noted that the agency expected this practice of consultation to continue with respect to bioengineered foods (57 FR 22984 at 22991). One early example of such a

[1] This document defines ''commercial distribution'' as the introduction, or delivery for introduction, into interstate commerce for sale or exchange for consumption in any form by humans or other animals.

consultation involved FLAVR SAVR™ tomatoes.[2] In developing FLAVR SAV™ tomatoes, Calgene used rDNA technology to introduce an antisense polygalacturonase gene, which was derived from tomatoes, and the kanamycin resistance gene (the *kan* ^{r} gene), which encodes the enzyme aminoglycoside-3′-phosphotransferase II (APH(3′)II). The enzyme APH(3′)II confers resistance to the clinically used antibiotics kanamycin and neomycin in the selection of new plant varieties developed using rDNA technology. The use of APH(3′)II raised several issues that had not previously been evaluated by the agency in the context of food safety. The initial consultation between the agency and Calgene about the intended use of APH(3′)II, which in this instance resulted in the filing and approval of a food additive petition (59 FR 26700, May 23, 1994), was an effective mechanism to fully explore and resolve these issues.

The resolution of these and other scientific issues entailed the use of nontraditional approaches to the evaluation of food safety. For example, traditional evaluation of the safety of a food additive frequently includes toxicological tests conducted in accordance with the principles outlined in the agency's ''Toxicological Principles for the Safety Assessment of Direct Food Additives and Color Additives Used in Food'' (Redbook (Ref. 3)).[3] In addition to guidance on when certain tests may be appropriate, the Redbook includes specific recommendations on the protocols for conducting such tests.

In contrast, issues raised during the consultations on APH(3′)II and the FLAVR SAVR™ tomato required evaluation of data generated using procedures that had only rarely been used in the evaluation of food safety. For example, Calgene used ''Southern blots'' to determine which DNA sequences had been transferred to FLAVR SAVR™ tomatoes, ''Northern blots'' to demonstrate the intended technical effect in FLAVR SAVR™ tomatoes, and ''Western blots'' to determine the amount of APH(3′)II present in FLAVR SAVR™ tomatoes. The use of nontraditional strategies in the evaluation of food safety likely will become the norm as the use of rDNA technology expands, and further consultations between industry and the agency would foster the identification and design of reasonable test procedures to evaluate the composition and safety of whole foods.

Consultations are an appropriate forum for industry and the agency to address proactively issues that are relevant to bioengineered foods, and developers have actively consulted with FDA about their products since the issuance of the 1992 policy. In June 1996, FDA provided guidance to industry on procedures for these consultations (the 1996 procedures (Ref. 5)).[4] Under that process, a developer who intends to commercialize a bioengineered food meets with the agency to identify and discuss relevant safety, nutritional, or other regulatory issues regarding the bioengineered food prior to marketing it. Depending on the experience the agency and the developer have with the kind of modification being considered, a developer may initiate such a consultation early or late in the development of the food. When the developer believes that it has accumulated adequate data or information to address any issues raised during the consultation, the developer begins the ''final consultation'' by submitting to FDA a summary of its scientific and regulatory assessment of the food. To date, the agency has completed its evaluation of data or other information from more than 45 such consultations (Ref. 6). FDA believes that, to date, all developers of bioengineered foods commercially marketed in the United States have consulted with the agency prior to marketing the food.

FDA continues to believe that the consultation process is appropriate for bioengineered foods. Accordingly, this proposed rulemaking includes FDA's recommendation that developers consult with the agency to identify and discuss relevant safety, nutritional, or other regulatory issues regarding a bioengineered food (see proposed § 192.10 and section VI of this document).

C. Public Meetings

In 1999, FDA announced that the agency would hold three public meetings, each in a different region of the United States (64 FR 57470, October 25, 1999). The purpose of those meetings was for the agency to share its current approach and experience over the past 5 years regarding bioengineered foods, to solicit views on whether FDA's policies or procedures should be modified, and to gather information to be used to assess the most appropriate means of providing information to the public about bioengineered products in the food supply. In the notice announcing the public meetings (64 FR 57470), FDA requested comments on specific questions regarding bioengineered foods. As a result of those meetings and the request for comments, the agency subsequently received more than 35,000 written comments about its policy regarding bioengineered foods.

At those meetings, and in the comments, FDA heard three messages very clearly. First, there does not appear to be any new scientific information that raises questions about the safety of bioengineered foods currently being marketed. Second, some of the public is concerned about FDA's existing guidance and regulatory approach to overseeing the safety of these products. These concerns include whether FDA's guidance and regulatory approach will be adequate for future developments and whether firms will continue to inform FDA about new bioengineered foods under the present program. In addition, there was a concern that the current regulatory process lacks transparency (e.g., because FDA discloses each consultation about a bioengineered food only at the end of the process). Third, there are very strongly held but divergent views as to whether bioengineered foods should bear special labeling. However, there was general agreement that providing more information to consumers about bioengineered foods would be useful[5] (Ref. 8).

II. Legal Authority

FDA is responsible for ensuring that all foods[6] in the American food supply conform to the applicable provisions of the law. The act provides FDA with broad authority to regulate the safety and wholesomeness of food. In particular, the act prohibits the adulteration of food under section 402 of the act (21 U.S.C. 342) and the misbranding of food under section 403

[2] This consultation was concluded in May 1994 (59 FR 26647 at 26700, May 23, 1994).

[3] In 1993, the Center for Food Safety and Applied Nutrition (CFSAN) released a revised Redbook for public comment (58 FR 16536, March 29, 1993). Following its evaluation of comments on each draft chapter of the Redbook, CFSAN is making revised chapters available on its Internet site (Ref. 4).

[4] In October 1997, FDA made administrative revisions to these procedures to reflect reorganizations within the Office of Premarket Approval, CFSAN, and the Center for Veterinary Medicine (CVM). In this document, FDA refers to these procedures as ''the 1996 procedures'' to reflect the year that the agency made them available.

[5] In May 2000, FDA announced that it intended to issue for public comment draft labeling guidance to aid manufacturers who wish to voluntarily label their products as made with or without the use of bioengineering or bioengineered ingredients (Ref. 7). The development of that draft guidance is outside the scope of this document.

[6] There are certain exceptions to this jurisdiction pertaining to meat, poultry, and egg products that are not relevant to this rulemaking.

of the act (21 U.S.C. 343). The act also requires that all food additives (as defined by section 201(s) of the act (21 U.S.C. 321(s))) be approved by FDA before they are marketed (sections 409 and 402 of the act (21 U.S.C. 348(a) and 342(a)(2)(C))). FDA is authorized to seek sanctions against foods that do not adhere to the act's standards, through seizure of foods that violate the act under section 304 of the act (21 U.S.C. 334); the agency is also authorized to seek an injunction against, or criminal prosecution of, those responsible for introducing such foods into commerce under sections 302 and 303 of the act (21 U.S.C. 332 and 333).

All plant breeding techniques have the potential to alter food source crops in ways relevant to the legal status of food derived from such crops. However, rDNA technology greatly facilitates, relative to traditional breeding techniques, both the introduction of specific new substances into foods and the directed modification of the composition of foods. This is in part because the technology expands the range of sources of new substances that can be introduced into plants, relative to those that can be introduced with traditional techniques, due principally to rDNA technology's ability to permit the transfer to a food crop of genetic material from virtually any organism. Similarly, at the present time, information related to the genomes of many organisms is rapidly expanding, with the result that newly identified genes are now available to breeders. In addition, rDNA technology increases the speed by which traits can be introduced into food crops, by allowing the introduction of specific, well-characterized genetic material and by reducing the need for backcrossing to remove undesirable traits. Given the efficiencies of rDNA techniques, the advances in these techniques, and the rapidly expanding information related to genomes, FDA expects that these techniques are likely to be utilized to an increasingly greater extent by plant breeders and that the products of this technology are likely in some cases to present more complex safety and regulatory issues than seen to date.

Alterations in food source plants accomplished using rDNA technology, with resulting changes in the foods derived from such plants, can present a range of regulatory issues (57 FR 22984 to 23005). For example, such alterations may present questions as to the food additive status of the substances introduced into the food as a result of the genetic transformation. As noted, bioengineering permits the introduction into food of substances from any source, and the number and types of genes available for use in rDNA technology are rapidly increasing. Thus, increasingly, substances may be introduced into food using rDNA techniques that cannot be introduced by traditional breeding. FDA noted in the 1992 policy that a nonpesticidal substance introduced into food by way of breeding is a food additive if the substance is not generally recognized as safe (GRAS) within the meaning of 21 U.S.C. 321(s). Because of the greater range of sources of substances that can be introduced into plants via rDNA technology, there is a greater likelihood that some of the new substances will be significantly different from substances that have a history of safe use in food or may otherwise not satisfy the GRAS standard in section 201(s) of the act(s). Thus, there is a greater potential for foods developed using rDNA technology to contain substances that are food additives.

The agency reiterates its view, as stated in the 1992 policy (57 FR 22990), that transferred genetic material can be presumed to be GRAS. Likewise, FDA is not altering its view, as set forth in the 1992 policy, that there is unlikely to be a safety question sufficient to question the presumed GRAS status of the proteins (typically enzymes) produced from the transferred genetic material, or of substances produced by the action of the introduced enzymes (such as carbohydrates, fats, and oils), when these proteins or other substances do not differ significantly from other substances commonly found in food and are already present at generally comparable or greater levels in currently consumed foods. However, FDA recognizes that because breeders utilizing rDNA technology can introduce genetic material from a much wider range of sources than previously possible, there is a greater likelihood that the modified food will contain substances that are significantly different from, or are present in food at a significantly higher level than, counterpart substances historically consumed in food. In such circumstances, the new substances may not be GRAS and may require regulation as food additives (57 FR 22990).

To date, FDA has not seen multiple examples of food additive substances introduced into food using rDNA technology. However, the agency recognizes that the potential for introducing such substances is real. There are, for example, certain plant-derived proteins that have a sweetening effect but whose biochemical function is not known.[7] In addition, they are found in plants that have not been used for food. Thus, in contrast to other proteins introduced into foods by genetic engineering, which have been presumed GRAS, there is little or no apparent basis for a GRAS presumption for such substances. Genes encoding the protein sweetener could be introduced into a fruit to enhance sweetness. In such circumstances, FDA should be made aware of the intended marketing of the modified food and have access to relevant information to evaluate whether the protein sweetener is a food additive within the act's definition under section 201(s) of the act. If the protein sweetener is a food additive, premarket approval of the substance would be required under section 409 of the act before the altered food could be lawfully marketed.

Another potential consequence of transferring genetic material from one source into another is the possibility of introducing a food allergen that would not be expected to be in a particular food, a change that would be relevant to the legal status of such food. This is because genes code for proteins, and virtually all allergens are proteins (although only a small subset of proteins are allergens). Thus, by increasing the range of potential proteins that can be introduced into food over that possible by traditional breeding, there is an increased potential for introducing an allergen into a food developed using rDNA technology. Also, rDNA technology can be used to express proteins at higher concentrations than they would otherwise be expressed; these higher concentrations may increase the potential for such proteins to be allergenic.

One implication of being able to transfer genes between unrelated plants using rDNA techniques is that it is possible to transfer genes from one food plant to another quite unrelated food plant, thereby allowing the potential transfer of an allergen from the first plant to the second. In such a case, food from the bioengineered plant could have an allergenic characteristic completely different from that of its conventional counterpart. Such a change would not be evident to the consumer. For example, a gene from a Brazil nut plant was introduced into a soy plant to improve the protein content of soy beans for use in animal feed. The seed was never commercialized, however, because when the company tested the

[7] The proteins apparently do not make the plants more attractive to insects or animals, and thus would not likely function as natural sweeteners in plants in the wild.

soy beans for allergenicity, they found that people allergic to Brazil nuts were also allergic to the bioengineered soy (Refs. 9 and 10). Given the potential consequences to sensitive consumers of eating soy products containing a Brazil nut allergen, such a food would likely be considered misbranded within the meaning of sections 201(n) and 403(a)(1) of the act, unless the presence of the new allergen were disclosed to consumers.

Further, in certain circumstances, labeling may not be adequate or practical to ensure that consumers are aware of the presence of unexpected allergens. FDA would likely consider such food containing an unexpected allergen to be adulterated within the meaning of section 402(a)(1) of the act because the unexpected allergen rendered the food possibly injurious to health. With alterations of this type, FDA should be made aware of the modification and have an opportunity to assess whether and how the food could legally be marketed. Specifically, FDA should have the opportunity to consider whether any labeling proposed by the developer would ensure that the engineered food is not misbranded within the meaning of sections 201(n) and 403(a)(1) of the act, and whether, even with labeling, the food would be adulterated because it may be injurious to health within the meaning of section 402(a)(1) of the act.

Compositional changes in foods created through breeding may also present regulatory status issues. Although traditional breeding techniques can be used to alter significantly the compositional characteristics of food, rDNA technology enhances that ability because rDNA technology enables breeders to make targeted changes in plant components such as proteins and other constituents. For example, rDNA techniques would facilitate a breeder's ability to modify a soy plant so that the composition of oil derived from the plant would more closely resemble that of a tropical oil than that of conventional soy oil. In these circumstances, the name ''soy oil'' would likely not be suitable for the oil derived from the altered soy plant because the composition of the new oil is significantly different from what is customarily understood to be ''soy oil''. Thus, a new common or usual name would likely be required for this new oil to ensure that the oil is not misbranded under section 403(i)(1) of the act. FDA should be made aware of compositional changes of this type so that the agency may consider whether a new common or usual name is required and, if so, what that new name should be.

Additionally, rDNA technology has recently begun to be used to introduce multiple genes to generate new metabolic pathways (Ref. 11). New metabolic pathways are intended to result in the synthesis of substances not normally present in the host plant. Such modifications may alter the composition of the food in a significant manner that may raise nutritional or safety issues or that would require use of a new common or usual name.

In addition to enabling breeders to introduce desired new characteristics into foods, all breeding methods used to develop new plant varieties have a potential for unintentionally introducing undesired new characteristics into foods (57 FR 22986). Broadly speaking, a breeding method's potential for introducing unintended changes to the characteristics of a food results either from bringing into a food plant extraneous genetic material encoding trait(s) additional to the desired trait(s), or from introducing mutations (such as deletions, amplifications, insertions, rearrangements, or DNA base-pair changes) into the plant's native genetic material that alter some characteristic(s) of the food.

The most commonly used breeding method is a ''narrow cross,'' which is hybridization between varieties of the same species. Hybridization between related species or genera that cannot be cross-fertilized is a ''wide cross.'' Wide crosses are useful for expanding the range of genetic source material that can be introduced into food crops, but are performed relatively infrequently because of technical and logistical difficulties. Both wide and narrow crosses will introduce into plants extraneous genetic material along with the genetic material encoding the desired traits. Breeders then attempt to remove any undesired traits through extensive backcrossing.

Plant breeders also use mutagenic techniques to modify plants. These techniques include random mutagenesis using a mutagenic agent and somaclonal variation. (Somaclonal variation refers to the process of growing a plant up from tissue culture and observing for phenotypic changes, which are often due to chromosomal rearrangements or other mutations.) Both techniques can introduce undesirable mutations along with possible desirable mutations. As with hybridization, breeders perform backcrosses to eliminate any undesirable traits. Cell fusion poses similar issues to those posed by wide crosses (because it generally is performed between cells of different species of plants) and posed by somaclonal variation (because it involves growing a plant up from tissue culture).

Recombinant DNA technology greatly reduces the likelihood of introducing extraneous genetic material, as compared with hybridization, because it enables breeders to introduce only the gene or genes of interest, with little or no extraneous deoxyribonucleic acid (DNA). However, it shares with mutagenesis techniques a potential for introducing unintended effects through mutations. In part, this is because rDNA technology involves growing plants from tissue culture, which can exhibit somaclonal variation, and, more significantly, because breeders using this technology generally cannot control the location in the plant genome at which genetic material will insert when introduced into a plant. Thus, with rDNA technology, the introduced genetic segment may insert into a genetically active chromosomal location. Such insertion may disrupt or inactivate an important gene or a regulatory sequence that affects the expression of one or several genes, thereby potentially affecting adversely the safety of the food or raising other regulatory issues. Such an occurrence is referred to as an insertional mutation.

FDA believes that in the future, plant breeders will increasingly use rDNA techniques to achieve more complicated compositional changes to food, sometimes introducing multiple genes residing on multiple vectors to generate new metabolic pathways. FDA expects that with the increased introduction of multiple genes, unintended effects may become more common. For example, rice modified to express pro-vitamin A was shown to exhibit increased concentrations of xanthophylls (Ref. 11), and rice modified to reduce the concentration of a specific protein was found to exhibit an increased concentration of prolamine (Ref. 12).

FDA believes that the use of rDNA techniques in plant breeding may lead to unintended changes in foods that raise adulteration or misbranding questions. These unintended changes may cause a food to be adulterated because the food may be rendered injurious to health within the meaning of section 402(a)(1) of the act, or, in the absence of a new common or usual name, cause the food to be misbranded under section 403(i)(1) of the act. Because of its role in ensuring the safety of the U.S. food supply, FDA needs to be aware of the modifications to food source plants from the application of rDNA technology and any unintended effects in food that result so that the agency can evaluate whether the foods

from such plants are adulterated or misbranded.

Because some rDNA-induced unintended changes are specific to a transformational event (e.g., those resulting from insertional mutagenesis), FDA believes that it needs to be provided with information about foods from all separate transformational events, even when the agency has been provided with information about foods from rDNA-modified plants with the same intended new trait and has had no questions about such foods. Similarly, the agency believes that it needs to be provided with information about foods from rDNA-modified plants whose intended change is the introduction of a pesticidal protein subject to oversight by the Environmental Protection Agency (EPA) rather than by FDA, because the transformational event that is used to introduce the pesticidal trait may also cause unintended changes to the food that would raise adulteration or misbranding questions subject to FDA jurisdiction.

In contrast, the agency does not believe that it needs to receive information about foods from plants derived through narrow crosses (including narrow crosses between different rDNA-modified lines). Narrow crosses, because they generally are performed between varieties that are themselves used in food or are very closely related to varieties used in food, are unlikely to introduce extraneous DNA that encodes traits that have not been in food before. In addition, plant lines used for narrow crosses generally have been subject to extensive backcrossing and field testing to ensure genetic stability (including lack of any active transposons that could cause insertional mutagenesis). Finally, because the plant lines are closely related to each other, crosses between them will involve homologous recombination and thus are unlikely to be subject to insertional mutagenesis. Therefore, narrow crosses are unlikely to result in unintended changes to foods that raise safety or other regulatory questions.

The agency recognizes that unintended changes associated with other non-rDNA breeding methods may pose regulatory questions similar to those posed by rDNA methods. For example, wide crosses, especially between a food plant variety and an undomesticated nonfood plant variety, have much greater potential than do narrow crosses for introducing unintended traits that may alter the safety of the food; undomesticated plants frequently produce toxins at levels unsafe for human consumption, and may also produce substances not found in food. The agency has not found it necessary to assess routinely the safety of foods derived from such breeding methods, because over the last 50 to 60 years that some of these techniques have been used in plant breeding, breeders have used well-established practices successfully to identify and eliminate, prior to commercial use, plants that exhibit unexpected adverse traits. The agency is not aware of a basis for additional FDA oversight of foods derived from plants modified by such techniques, given that there has not been such a need in the past and that there do not appear to be any significant changes in breeders' use of such techniques that would warrant new FDA oversight. Rather, because of the technical advantages of rDNA methods over these other techniques, FDA anticipates that, in the future, breeders will likely use non-rDNA methods less frequently to introduce new characteristics into food plants as they increasingly utilize rDNA techniques. Likewise, despite the similar potential for unintended effects, FDA believes that declining to propose a requirement that the agency be notified about the commercialization of food source plants transformed using techniques other than rDNA is consistent with its current conclusion that, unexpected effects aside, rDNA techniques have a greater potential, relative to conventional methods of breeding, to result in the development of foods that present legal status questions. The agency therefore is not proposing to include foods from crops modified by methods other than rDNA techniques within the scope of this proposed notification rule. The agency requests comment as to whether it should include foods from crops developed by wide crosses or other breeding methods in the scope of any final rule based upon this proposal.

FDA recognizes that whether there is a change in the legal status of a food resulting from a particular rDNA modification depends almost entirely on the nature of the modification, and that not every modification accomplished with rDNA techniques will alter the legal status of the food. In other words, many modifications will result in a food that does not contain an unapproved food additive, does not contain an unexpected allergen, and does not differ significantly in its composition compared with its traditional counterpart or otherwise require special labeling. For this reason, FDA is neither proposing to require premarket approval for all foods developed using rDNA technology nor is the agency proposing an across-the-board requirement that all such foods bear special labeling.

There is substantial basis to conclude, however, that there is greater potential for breeders, using rDNA technology, to develop and commercialize foods that are more likely to present legal status issues and thus require greater FDA scrutiny than those developed using traditional or other breeding techniques. It was in part for this reason that, in 1994, the agency initiated a consultation process. Since that time, developers have actively consulted with FDA regarding their new plant varieties; under this process, the agency has completed its evaluation of data and other information from some 45 consultations.

As noted, FDA believes that, to date, the developer of each rDNA variety commercially marketed in the United States has consulted with the agency prior to marketing food from the new variety. But these products represent only a small fraction of the potential products of rDNA technology.[8] Additionally, in general, the introduced traits have been agronomic in nature (i.e., directed at the characteristics of the plant and not at the characteristics of the food produced by the plant). However, this picture is rapidly changing. The current list, which is provided by the Animal and Plant Health Inspection Service (APHIS) in the U. S. Department of Agriculture (USDA), of field tests of plants being developed using rDNA technology shows that the plants under development have a broader variety of introduced traits (Ref. 13). Additionally, that list shows that many such traits are not simply agronomic, but are intended to modify the food itself, and thus would be more likely than in the past to raise regulatory issues falling under FDA's purview.[9] Finally, as noted previously, FDA believes that, given the efficiencies of rDNA techniques, the advances in these techniques, and the rapidly expanding information related to genomes, these techniques are likely

[8] For example, in the 45 consultations completed under the 1992 policy, only 11 different commodities are represented, including 12 consultations on corn, 7 on canola, 6 on tomatoes, 5 on cotton, and 4 on potatoes. Moreover, the 45 consultations do not represent 45 separate types of modifications; rather, these 45 consultations represent only 9 general types of modifications. These modifications were herbicide resistance, insect and virus resistance, delayed ripening or softening, male sterility or fertility restorer, high phosphorus availability, and modified oil.

[9] These include modifications for altered protein quality, increased carotenoid content, increased fruit solids, altered fiber quality, and increased fruit sweetness, among others.

to be utilized by plant breeders to an increasingly greater extent.

The confluence of the increasingly broader use of rDNA techniques to develop foods for human and animal use and the globalization of the world's food supply also suggest that FDA needs to be aware of the various foods developed using rDNA technology. Currently, approximately 45 percent of the United States' plant-derived food is imported, and that percentage continues to increase. The agency expects that rDNA techniques may, over time, be used increasingly by plant breeders and developers in countries that export foods to this country. In such circumstances, the accuracy of FDA's knowledge about the presence in the U.S. food supply of foods developed using rDNA techniques is likely to decrease. In addition, the awareness of particular food allergies is not uniform throughout the world because the diets of some populations do not contain sufficiently large amounts of a food such that the allergic potential has been demonstrated; in these circumstances, it is particularly important that FDA be aware of imported foods modified using rDNA techniques that may unexpectedly contain a substance that is an allergen.

For all these reasons, FDA believes that the food products of rDNA technology are appropriately made subject to greater regulatory scrutiny by FDA in the form of enhanced agency awareness of all such foods intended for commercial distribution. This increased agency awareness will ensure that at this stage of this continuously evolving technology, all market entry decisions about new bioengineered foods, including those intended for import into the United States, are made consistently and in full compliance with the law. Similarly, in order for the agency to evaluate fully and consistently the possible regulatory consequences of the alterations made possible using rDNA technology, FDA must be made aware of the bioengineered foods entering commercial distribution.

Section 701(a) of the act (21 U.S.C. 371(a)) authorizes the Secretary of the Department of Health and Human Services (the Secretary) to issue regulations for the efficient enforcement of the act; under section 903(d)(2) of the act (21 U.S.C. 393(d)(2), the Secretary is responsible for executing the act, including section 701(a), through the Commissioner of Food and Drugs. The authority under section 701(a) of the act to issue regulations under the act extends to both regulations that supplement a specific statutory mandate as well as regulations that are justified by the statutory scheme as a whole. (See *National Confectioner's Association* v. *Califano*, 569 F.2d 690, 693 (D.C. Cir. 1978), citing *Toilet Goods Association* v. *Gardner*, 387 U.S. 158, 163 (1967).) In assessing a regulation issued under section 701(a), it is important to consider both the statutory purpose as well as the practical aspects of the situation, including the possible enforcement problems that may be encountered by FDA. (See *National Confectioner's Association* v. *Califano*, 569 F.2d 690, 693 (D.C. Cir. 1978), citing *Toilet Goods Association* v. *Gardner*, 387 U.S. 158, 163 (1967).)

To ensure that FDA has the maximum amount of information about foods from bioengineered plants, the agency has tentatively concluded that, prior to initiation of commercial distribution in the United States of a bioengineered food, FDA must be notified of the intent to market such food, including foods intended for import into the United States. Notification will ensure that the agency is aware of all bioengineered foods entering commercial distribution that are subject to FDA's jurisdiction and will help to ensure that all market entry decisions by the industry are made consistently and in full compliance with the law. This will permit the agency to assess on an ongoing basis whether foods developed using rDNA technology comply with the standards of the act. FDA believes that it is essential that all those developing and marketing bioengineered foods participate fully and completely in the proposed notification program. Therefore, the agency is proposing that the notification program that is described in this document be mandatory.

Accordingly, for the reasons set forth above concerning the special circumstances of bioengineered foods, to enforce the act efficiently, and in particular, to administer efficiently the act's various provisions that relate to food as such provisions apply to bioengineered food, including section 301 of the act (21 U.S.C. 331) and sections 402, 403, and 409 of the act, FDA is proposing regulations to require that the agency be notified at least 120 days prior to the initiation of commercial distribution in the United States of a bioengineered food. The elements of FDA's proposed program are discussed in detail below.

III. Scope

FDA is proposing to require the submission to the agency of data and information regarding plant-derived bioengineered foods that would be consumed by humans or animals. FDA's proposal also includes a recommendation that prospective notifiers participate in a presubmission consultation program. The regulations regarding bioengineered foods that would be consumed by humans would be codified in new part 192. The regulations regarding bioengineered foods that would be consumed by animals would be codified in new part 592. The proposed regulations regarding bioengineered foods that would be consumed by animals parallel the proposed regulations regarding bioengineered foods that would be consumed by humans. For ease of discussion, in this proposed rule, FDA describes each of the regulations that would be codified in part 192, without describing the parallel regulations in part 592. Following this discussion, FDA describes areas of importance in the proposed animal feed regulations (section XI of this document).

IV. Definitions

FDA is proposing to codify five definitions that are associated with the proposed notification program (proposed § 192.1). These terms are bioengineered food, commercial distribution, notifier, premarket biotechnology notice (PBN or notice), and transformation event. FDA invites comments on these proposed definitions. FDA is particularly interested in comments on the proposed definitions of bioengineered food and transformation event. Specifically, FDA is requesting comment on whether these proposed definitions are consistent with the agency's intent (described in section V of this document) that the proposed notification program apply to a particular subset of plant-derived foods. Such comments may result in a modification to the proposed definitions.

Under the proposed definitions, a required PBN may be submitted by any person who is responsible for the development, distribution, importation, or sale of a bioengineered food. Based on the agency's experience, FDA expects that it ordinarily will be the seed developers and purveyors who notify the agency about a bioengineered food.

V. Requirement for Premarket Biotechnology Notice

FDA is proposing to require a submission to the agency of data and information regarding a plant-derived bioengineered food at least 120 days prior to the commercial distribution of the food (proposed § 192.5). The proposed regulation would include a bioengineered food derived from a new

plant variety modified to contain a pesticidal substance, and would exclude a bioengineered food that meets three specified criteria. The rationale for this proposed notification requirement is discussed in section II of this document. FDA specifically requests comment on the scope of the proposed notification requirement and on the proposed conditions for exclusion from the notification requirement. Such comments may result in a modification to the proposed regulation.

A. Foods That Are Subject to the Requirement

FDA is proposing that the notification requirement apply to a bioengineered food derived from a new plant variety modified to contain a pesticidal substance (proposed § 192.2(a)). Under the Federal Insecticide, Fungicide, and Rodenticide Act (FIFRA) (7 U.S.C. 136 *et seq.*), EPA has authority to regulate all pesticides, regardless of how they are made or their mode of action. Under the act, EPA has authority to regulate pesticide residues in foods and FDA has authority to regulate a nonpesticidal substance that may be introduced into a new variety and that is expected to become a component of food. Given this statutory framework, both FDA and EPA agree that any food safety questions beyond those associated with the pesticide, such as those raised by unexpected or unintended compositional changes, are under FDA's jurisdiction (57 FR 22984 at 23005). FDA's proposal to include in its notification program new plant varieties that contain a pesticidal substance will facilitate consultation between EPA and FDA on the scientific and regulatory issues that are not within the scope of EPA's authority under FIFRA and the act.

FDA is proposing to exclude from the notification requirement a bioengineered food that satisfies three conditions. The first condition is that the food derives from a plant line that represents a transformation event that has been addressed in a notice previously submitted to FDA (proposed § 192.5(a)(1)). Under § 192.5(a)(1), a separate notice would be required for distinct plant lines that are derived from separate transformed cells, even when those cells were transformed during a single transformation procedure. The second condition is that the use or application of the bioengineered food has been addressed in a notice previously submitted to FDA (proposed § 192.5(a)(2)). Under § 192.5(a)(2), a separate notice would be required, for example, if herbicide tolerance introduced into a variety of sweet corn that is used solely for human food is subsequently transferred, using traditional plant-breeding techniques, to a variety of field corn that would also be used in food intended for consumption by animals. The third condition is that a letter from FDA demonstrates that FDA has evaluated the use or application of the bioengineered food and has no questions about it (proposed § 192.5(a)(3)). Under § 192.5(a)(3), a notice would be required if, for example, a prior notice about another use of a bioengineered food is still pending or if the agency's response to a prior notice demonstrates that FDA did not consider the prior notice as providing a basis to conclude that the bioengineered food was in compliance with all applicable requirements of the act.

As mentioned, FDA believes that all developers of bioengineered foods that already are commercially marketed in the United States have consulted with the agency prior to marketing the food. FDA believes that any legal status questions that pertain to the applicable bioengineered foods have been identified and resolved through that consultation process. Therefore, the notification requirement would not extend to bioengineered food obtained from a plant line (or series of plant lines) that derives from a particular transformation event, as long as both the applicable transformation and the use or application of the bioengineered food has been addressed satisfactorily in a completed consultation under the voluntary program.

It is likely that some final consultations received under the 1996 procedures would still be pending on the date of a final rule based on this proposal. The proposed regulations include no specific provisions regarding a bioengineered food that is the subject of a pending final consultation under the 1996 procedures. FDA specifically requests comment on how FDA should administer such submissions. FDA also specifically requests comment on whether the process for administering a final consultation that is pending on the date of a final rule based on this proposal should be included in these regulations. Such comments may result in a modification to the proposed regulation.

FDA specifically requests comment on the scope of proposed notification requirement and on the proposed conditions for exclusion from the notification requirement. Such comments may result in a modification to the proposed regulation.

B. Origin of Data and Information

FDA is proposing that the data or information that a notifier submits to FDA regarding a bioengineered food must be generated from a plant line whose derivation can be traced to the transformation event that is the subject of the notice and that contains the genetic material introduced via the transformation event (proposed § 192.5(b)). As a practical matter, the proposed regulation will give flexibility to producers while providing the agency with relevant information concerning the nature of the bioengineered foods. FDA specifically requests comment on this proposed provision. Such comments may result in a modification to the proposed regulation.

C. Timing

FDA is proposing to require that a notifier submit a PBN at least 120 days before the bioengineered food is marketed (proposed § 192.5(c)). The proposed timeframe is consistent with contemporary expectations of the Congress for another notification program, the notification program for food contact substances (section 409(h) of the act).

FDA believes that it can, in most circumstances, complete its evaluation of a PBN within 120 days because, as discussed more fully below, FDA is recommending that prospective notifiers participate in a presubmission consultation program. The purpose of the presubmission consultation program is to enable a prospective notifier to identify and address relevant safety, nutritional, or other regulatory issues regarding the bioengineered food before submitting a PBN. Given this presubmission consultation program, FDA expects that a notifier will have sufficient information to prepare a notice that adequately addresses all issues and that scientific experts at the agency will be familiar with the issues raised by a particular bioengineered food when the agency receives the applicable PBN.[10]

VI. Recommendation for Presubmission Consultation

FDA is proposing to include in the regulation a recommendation that a prospective notifier consult with the agency, before submitting a PBN, to identify and discuss relevant safety, nutritional, or other regulatory issues regarding the bioengineered food

[10] The consultation procedures do not identify a timeframe for FDA to complete its evaluation of a final consultation. As of April 2000, under that program the median time for FDA's response to a final consultation was approximately 155 days and the average time was approximately 175 days.

(proposed § 192.10). The proposed recommendation describes procedures for requesting consultation and the public disclosure provisions that likely would apply to records that FDA maintains about the consultation. Under § 192.10(f), a notifier must state his view as to whether the fact that he is consulting with FDA, or any or all of the data or information that he submits to FDA, is exempt from disclosure under the Freedom of Information Act (FOIA) and must explain the basis for any such exemption claim. The recommendation to consult with FDA derives from the 1992 policy, the 1996 procedures, and FDA's experience under the 1996 procedures. FDA discusses the details of this proposed recommendation immediately below.

Using rDNA technology, bioengineered plants such as corn are now being developed for non-food uses. Examples of such applications include the transfer of genes that encode pharmaceutical proteins, oral vaccines, and enzymes that would be used for non-food industrial applications. In some cases, such as most of the pharmaceutical proteins, the final product would be a highly purified component of the plant commodity. In other cases, such as some oral vaccines, the final product would be a minimally processed plant commodity. In some cases, there may be a potential for a bioengineered plant commodity that is not intended for use in food to enter the food supply inadvertently. FDA encourages developers of bioengineered plants that are not intended for use in food or feed, but that theoretically could enter the food or feed supply, to participate in the consultation program described in this proposed rule. This participation would ensure that developers have given careful consideration to the procedures needed to ensure that their products do not inappropriately get into the food supply, and are aware of the legal implications if their products do.

A. Presubmission Consultation Program

FDA is proposing to recommend that a prospective notifier participate in a presubmission consultation program (proposed § 192.10(a)). Under the program (proposed § 192.10(b)), a prospective notifier would write to FDA and ask to consult about a bioengineered food. FDA would establish an administrative file for each consultation and would meet with a prospective notifier upon request. Although FDA may provide written feedback during the consultation, that feedback would not release the prospective notifier from the proposed requirement to notify FDA about the bioengineered food at least 120 days before commercialization of the food. The proposed presubmission consultation program derives from the 1992 policy, the 1996 procedures, and FDA's experience under the 1996 procedures.

B. Public Disclosure

FDA is proposing to provide information about the availability for public disclosure of: (1) The fact that a developer is consulting with FDA (proposed § 192.10(c)) and (2) the data or information in the file that FDA would establish for a presubmission consultation (proposed § 192.10(d)). The regulations would inform all parties of the fact that FDA must act in response to a request under FOIA for information on presubmission consultations, and must disclose, or protect from disclosure, the applicable record(s) in accordance with § 20.61 (21 CFR 20.61) (proposed § 192.10(c)(2) and (d)(1)).

In light of the significant public interest in bioengineered foods and in FDA's oversight of these foods, FDA believes that it is important for developers to be informed that FOIA may entitle the public to know that the developer has provided data or information to FDA about a bioengineered food and to receive a copy of those data or information. Likewise, FDA believes that it is equally important for the public to know that the fact that a developer is consulting with FDA may be exempt from disclosure under FOIA and that some or all of the data or information that are submitted to FDA during a presubmission consultation could be exempt from public disclosure.

Under FOIA, data or information that are submitted to the Federal Government are available for public disclosure unless those data or information fall within an established exemption of FOIA. The exemption that is most relevant to data or information provided to FDA during a presubmission consultation is ''exemption 4,'' which applies to ''trade secrets and commercial or financial information obtained from a person and privileged or confidential.'' (5 U.S.C. 552(b)(4)). FDA has issued regulations implementing exemption 4 of FOIA in § 20.61.

FDA believes that, in most cases, the fact that a developer is consulting with FDA would not constitute confidential commercial information. For example, most plants developed using rDNA technology are considered ''regulated articles'' under regulations of USDA's APHIS (7 CFR part 340), which regulates the introduction of certain ''genetically engineered'' plants. At some stage of research and development of a regulated article, a developer requests from APHIS a determination of the article's regulatory status, and, consistent with FOIA requirements, APHIS discloses that request. Thus, by virtue of the APHIS process, the fact that the developer is developing the plant and its food product would usually already be disclosed.

FDA also believes that, in most cases, most of the data or information provided to FDA during a presubmission consultation would not constitute a trade secret or confidential commercial information. For example, only a handful of the submissions that FDA has received under its current consultation program identified specific data or information that the developer claimed to be exempt under § 20.61. Nevertheless, there could be circumstances where a developer initiates a presubmission consultation about a product that has not previously been disclosed to the public and has grounds to claim that the fact of the consultation should not be available for public disclosure. In such circumstances, disclosing any data or information in the applicable submission would reveal the existence of the submission. Thus, as long as the existence of the consultation is exempt from disclosure, all data or information in the submission would necessarily be exempt from disclosure.

C. Standard Procedures

FDA is proposing that a prospective notifier ask FDA in writing for an opportunity to consult about a bioengineered food (proposed § 192.10(e)). A written request would provide clarity about the subject of the consultation.

FDA is proposing to require that a prospective notifier who initiates a consultation inform FDA whether, in his view, the fact of the consultation with FDA is confidential, and whether, in his view, any or all of the provided data or information is confidential (proposed § 192.10(f)(1)). FDA also is proposing to require that a prospective notifier who claims confidentiality for the existence or content of a presubmission consultation explain the basis for that claim (proposed § 192.10(f)(2)). FDA is proposing these requirements because of the significant public interest in bioengineered foods. These requirements would ensure that FDA is aware of the prospective notifier's position regarding the availability for public disclosure of the existence and content of the

consultation. In addition, FDA believes that these requirements would alert a prospective notifier to the fact that the data or information contained in a submission to FDA are available for disclosure unless the applicable criteria for exemption are satisfied.

FDA is proposing to recommend that a prospective notifier send FDA a synopsis about the requested consultation (proposed § 192.10(f)(3)). The recommended synopsis would include the prospective notifier's name and address, the name of the bioengineered food and the plant species from which it is derived, a distinctive designation(s) that the notifier uses to identify the applicable transformation events, a list of the identity(ies) and source(s) of introduced genetic material, a description of the purpose or intended technical effect of the transformation event (including expected significant changes in the composition or characteristic properties of food derived from the plant as a result of the transformation event, regardless of whether these changes result from the insertion of new genes or from a modification in the expression of endogenous genes), a description of the applications or uses of the bioengineered food, and a description of any applications or uses of the bioengineered food that are not suitable for the bioengineered food. FDA is proposing to recommend this synopsis because the agency believes that the information in the synopsis is both necessary and sufficient to characterize the bioengineered food in a manner that will enable the agency to engage in a meaningful dialogue with the prospective notifier. For example, information about the identity and intended technical effect of the transformation event would enable the agency to address the potential issue that the food would contain an unapproved food additive. A distinctive designation that the notifier uses to identify the applicable transformation event would enable the agency to efficiently locate other agency records regarding that transformation event. It would also facilitate discussions with APHIS and EPA, if sponsors use those same designations in information supplied to the other agencies. Information about the sources of the genetic material would enable the agency to identify issues associated with a known allergenic source. Information about expected significant changes in the composition of the food would enable the agency to discuss suggestions for an appropriate common or usual name for the bioengineered food. Information about the applications or uses of the food would enable the agency to identify applicable regulatory situations (e.g., whether the bioengineered food would likely be used in human food, animal feed, or both). Information about any applications or uses that the notifier believes would not be suitable for the bioengineered food would enable the agency to identify potential safety questions, if any, about such use of the bioengineered food.

FDA is proposing that a prospective notifier send a request for consultation regarding a bioengineered food to CFSAN (proposed § 192.10(g)). As necessary and appropriate, CFSAN would coordinate the consultation process with CVM. The proposed regulation is consistent with the approach in the 1996 procedures, which has worked well.

FDA is proposing that a prospective notifier should send an original and two paper copies of a written request for consultation and of any additional materials that are sent to FDA during the consultation process (proposed § 192.10(h)(1) and (h)(2)). FDA is proposing an original and two copies of these submissions for efficiency in providing information about the presubmission consultation to the agency's scientific reviewers.

Because it is likely the data or information in a presubmission consultation would be requested under FOIA by an outside party, FDA is proposing that a prospective notifier who claims that certain data or information provided to FDA during the presubmission consultation are exempt from disclosure should clearly identify, in each submission, the data or information at issue (proposed § 192.10(h)(3)(i)). When this is the case, FDA also is proposing that the prospective notifier should provide an additional paper copy of the submission that does not contain such data or information (i.e., a redacted paper copy under proposed § 192.10(h)(3)(ii)). Providing a redacted copy would communicate very clearly which data or information the prospective notifier considers to be exempt. These recommendations are consistent with a practice that is commonly used by firms who send FDA a food additive petition that contains information that the petitioner claims to be confidential, a practice that has worked well. In addition, the practice of providing a redacted copy also has been used in a few cases under the 1996 procedures.

FDA is proposing that the redacted paper copy be prepared in a manner that clearly identifies the location and relative size of deleted information. This proposed regulation is consistent with FDA's proposed regulations (64 FR 60143, November 4, 1999) regarding implementation of the Electronic Freedom of Information Act Amendments of 1996 (EFOIA (Public Law 104–231)). EFOIA includes, among other things, provisions requiring agencies to inform requesters about the amount of information not being released to them.

FDA is proposing to specify the materials that the agency would place in an administrative file that it establishes for a presubmission consultation (proposed § 192.10(i)(1)). These materials include any correspondence between the prospective notifier and FDA, any written materials that the prospective notifier provides during the consultation process, and a memorandum of each meeting or significant phone call between FDA and the prospective notifier during the consultation. This part of the regulation would inform both prospective notifiers and outside parties of the materials that ordinarily would be in the administrative file of the consultation and thus potentially be subject to disclosure under FOIA.

FDA's proposal includes its commitment to discuss issues associated with a bioengineered food with any prospective notifier who asks to do so (proposed § 192.10(i)(2)). FDA is proposing to include this commitment to both remind and encourage prospective notifiers that the purpose of the recommended program is for a prospective notifier to engage FDA in a discussion about the bioengineered food at an early stage of the food's development. However, the agency realizes that there may be circumstances where such a discussion would not be an efficient use of resources for either the prospective notifier or for FDA. For example, a prospective notifier may intend to notify FDA about bioengineered foods that derive from a series of plant lines that are the result of independent transformation events with the same genetic construct. After FDA has completed its evaluation of one of these bioengineered foods, the notifier likely would be aware of most or all of the applicable safety, nutritional, or other regulatory issues that could be associated with the food. Nevertheless, FDA would welcome the opportunity to be informed about the notifier's plans to submit additional notices because this information could help the agency to plan its workload.

The proposed regulation describes a flexible process for any discussion (e.g., by mentioning that the discussion could

take place through a meeting or through a telephone conference). FDA is highlighting the opportunity to discuss the bioengineered food by a mechanism other than a face-to-face meeting to minimize the potential that a small business or academic research group would elect not to participate in the program due to the cost of travel. Given the agency's experience under the current consultation process, FDA is confident that a meaningful dialogue can often be accomplished without a face-to-face meeting.

VII. Premarket Biotechnology Notice: Administrative Information

FDA is proposing to codify certain administrative information that would apply to a PBN (proposed § 192.20). The proposed administrative information includes information about where to send a PBN, the number of copies to send, how to include information in a foreign language, how to refer to data or information that are already in FDA's files, how to obtain guidance on scientific issues, and the prerogative of a notifier to withdraw a PBN from FDA's consideration. Many of these administrative aspects of the proposed notification program are consistent with procedures already in place for the food additive petition program (§ 171.1 (21 CFR 171.1)). FDA discusses the details of these administrative aspects of the proposed notification program immediately below.

A. Submissions to CFSAN for Use in Human Food, Animal Feed, or Both

FDA is proposing that a notifier send a PBN regarding a bioengineered food to CFSAN (proposed § 192.20(a)). As necessary and appropriate, CFSAN would coordinate FDA's evaluation of the PBN with CVM. The proposed regulation is consistent with the approach that FDA recommended in the 1996 procedures, an approach that has worked well.

B. Paper Copies

FDA is proposing that a prospective notifier send to the agency an original paper version and one paper copy of a PBN (including any amendments) (proposed § 192.20(b)(1)). A notifier would have an option to submit one additional paper copy or, under proposed 192.20(c)(1), to submit an electronic copy that is formatted in a manner that makes it suitable for FDA to use while evaluating the PBN. The number of paper copies required by the regulation is consistent with the number of paper copies that FDA currently requires for other premarket submissions, such as a food additive petition. A requirement for multiple paper copies generally serves the purpose of providing a copy of the submission to multiple scientific reviewers. However, as discussed below, FDA also is recommending that a notifier submit an electronic copy of a PBN that is formatted in a manner that makes it suitable for FDA to use in evaluating a PBN. Because scientific reviewers could accomplish their review by accessing the electronic copy, under the proposed rule, a notifier who submits an electronic evaluation copy would submit one less paper copy. FDA would retain the original paper version at CFSAN, while the paper copy would be retained at CVM. Comments may result in a modification to the proposed requirement to submit a single paper copy.

Under the regulation, the paper copy would be the official version at FDA. This provision would clarify the status of an electronic copy that FDA also is proposing to require [11] (see proposed § 192.20(c)(1) and section VII.C of this document).

FDA is proposing that a notifier who claims that specific data or information in the PBN are confidential must prepare and submit one paper copy of the PBN that does not contain any of those data or information (proposed § 192.20(b)(2)). Consistent with the EFOIA proposed rule, the notifier would prepare this redacted paper copy in a manner that clearly identifies the location and relative size of deleted information. As discussed previously regarding a presubmission consultation (see section VI.C of this document), the redacted copy would be very useful as it would communicate very clearly which data or information the notifier considers to be exempt from disclosure.

C. Electronic Copies

FDA is proposing to include in the regulation a recommendation that a notifier submit an electronic copy (the evaluation copy) that is formatted in a manner that makes it suitable for FDA to use while evaluating the PBN (proposed § 192.20(c)(1)). Because technology is advancing at a rapid pace, the regulation would inform notifiers how to obtain information about the appropriate format of the electronic copy rather than specify that format. Under the regulation, a notifier would provide such an electronic copy of both the original PBN and of any amendments to the PBN. FDA is recommending the submission of an electronic evaluation copy to take advantage of the fact that contemporary technology makes it possible for notifiers to send, and FDA to evaluate, submissions of data or information in electronic form, and the availability of an electronic evaluation copy has the potential to improve the efficiency of FDA's review. To encourage manufacturers to submit an electronic evaluation copy, a notifier who submits such a copy would submit a total of two, rather than three, paper copies.

FDA also is proposing to require that a notifier submit an electronic copy (the disclosure copy) that is formatted in a manner that makes it suitable for FDA to use to make a PBN available to the public in an electronic reading room (proposed § 192.20(c)(2)). As would be the case with the electronic evaluation copy, the regulation would inform notifiers how to obtain information about the appropriate format of the electronic copy and a notifier would be required to provide such an electronic copy of both the original PBN and of any amendments to the PBN. Consistent with the EFOIA proposed rule, a notifier would delete data or other information claimed to be confidential from the electronic copy in a manner that clearly identifies the location and relative size of deleted information. FDA is proposing to require an electronic disclosure copy to facilitate the agency's compliance with EFOIA, which includes provisions regarding the availability of records in electronic form and the establishment of ''electronic reading rooms.'' As discussed in the EFOIA proposed rule, section 4 of EFOIA (5 U.S.C. 552(a)(2)(D)) adds a new category of records that agencies must make available in their public reading rooms. This new category consists of copies of records that have been released to any person under FOIA and that, because of their subject matter, the agency determines have become or are likely to become the subject of subsequent requests for substantially the same records. In light of the significant public interest in bioengineered foods and in FDA's oversight of these foods, FDA has tentatively concluded that it is likely that each submitted PBN would be requested under FOIA multiple times.

The preparation of an electronic copy formatted in a manner that makes it suitable for FDA to use to make a PBN available to the public in an electronic reading room will require use of computer technology. Although the use

[11] Under 21 CFR 11.1(c), an electronic record that meets the requirements of 21 CFR part 11 may be used in lieu of a paper record, unless paper records are specifically required. However, CFSAN is not prepared, at this time, to accept an electronic record as the official record because CFSAN does not yet have specific guidance for the submission of records only in electronic form.

of this technology is widespread, it is possible that a firm that develops a bioengineered food would not have access to the particular technology that will be needed. For this reason, under the proposed regulation a notifier may request a waiver from the requirement to submit an electronic disclosure copy. FDA would grant or deny the notifier's request on its merits.

FDA requests comments on its proposal to require an electronic disclosure copy of a PBN and to provide a notifier with an opportunity to request a waiver from this requirement. Such comments may result in a modification to the proposed requirement to submit such a copy.

D. English Language Translations, Incorporation by Reference, and Available Guidance Documents

FDA is proposing that a notifier who submits any material in a foreign language provide an English translation that is verified to be complete and accurate (proposed § 192.20(d)). This proposed regulation is necessary for the agency's efficient evaluation of a PBN and is consistent with other agency regulations regarding the submission of information in a foreign language (see e.g., § 171.1(a) and the agency's recent proposal for a premarket notification program for food contact substances (65 FR 43269, July 3, 2000)).

FDA is proposing that a notifier may incorporate by reference data or information that are already retained in FDA's files (proposed § 192.20(e)). The proposed regulation specifies that a notifier may simply incorporate by reference a file that the notifier previously submitted. If the notifier wishes to incorporate by reference a file that someone else previously submitted to FDA, the procedure to incorporate that file into the PBN depends on whether the file is publicly available (e.g., the file is in an electronic reading room or is otherwise available under FOIA). If the file is publicly available, a notifier may incorporate that file by referring FDA to it. If the file is not publicly available, a notifier may incorporate that file by referring FDA to it if the person who submitted the file authorizes the notifier to do so in a signed statement and the notifier includes that signed statement in the PBN. This proposed provision is similar to that described for incorporating previously submitted information into a food additive petition (§ 171.1(b)) and to that described in the agency's recent proposal for a premarket notification program for food-contact substances (65 FR 43269, July 13, 2000).

FDA is proposing to inform notifiers that they can obtain current guidance regarding specific technical issues by writing to FDA or by looking on FDA's site on the Internet (proposed § 192.20(f)). FDA is adding this provision to assist notifiers in addressing common technical issues, such as the estimation of dietary exposure to substances that are present in food. FDA expects that this provision will minimize the time spent, by the agency and the notifier, on routine technical issues.

E. Opportunity to Withdraw

FDA is proposing to codify a provision that a notifier may request, at any time during FDA's evaluation of a PBN, that FDA cease to evaluate that PBN (proposed § 192.30(g)). Under the regulation, the notifier could submit a future PBN about the same bioengineered food. FDA would retain the PBN in its files and would classify it as ''withdrawn.'' A notifier could choose to withdraw a notice for several reasons. For example, it is possible that discussions between the notifier and FDA would result in a decision by the notifier to substantially revise the notice to provide data or information that address the applicable legal status questions in a more thorough manner than the submitted PBN.

The proposed regulation is consistent with the provisions of the food additive premarket review program (§ 171.7). Although a notifier does not need explicit authorization to withdraw a notice, a notifier may not be aware of this fact. Likewise, a notifier may not be aware that a notice that is ''withdrawn'' remains an agency record that could be requested under FOIA. Thus, the regulation would both clarify a prerogative accorded to a notifier and inform the notifier of consequences associated with that prerogative.

VIII. Premarket Biotechnology Notice: Required Parts

FDA is proposing that a PBN be separated into seven parts (proposed § 192.25). These would include a letter (proposed § 192.25(a)); a synopsis (proposed § 192.25(b)); administrative statements about the status of review of the bioengineered food by other Federal agencies or by foreign governments (proposed § 192.25(c)); data or information about the method of development (proposed § 192.25(d)); a discussion of any newly inserted genes that encode resistance to an antibiotic (proposed § 192.25(e)); data or information about substances introduced into, or modified in, the food (proposed § 192.25(f)); and data or information about the food (proposed § 192.25(g)). The proposed regulation fosters a case-by-case approach to addressing relevant scientific and regulatory issues rather than a single set of tests that likely would not be applicable in all circumstances. In general, the proposed requirements derive from the 1992 policy, the 1996 procedures, and FDA's experience under the 1996 procedures. In proposing these requirements, FDA also has drawn on its experience in administering a proposed notification program for GRAS substances (62 FR 18938, April 17, 1997).[12]

The proposed regulation reflects FDA's current judgment based on contemporary scientific methods for development of bioengineered foods and the types of bioengineered foods that are now under development. Accordingly, the proposed regulation focuses on modifications to foods that are likely to result in commercial products and does not attempt to predict future changes in foods that may result from technological advances. In this field of rapid scientific development, if circumstances warrant, FDA would propose to revise any regulation that results from this proposal. FDA requests comment on technological advances in rDNA technology that are likely to result in commercial products and that would not be addressed by the proposed submission requirements. Such comments may result in a modification to the proposed submission requirements.

A. Part I: Letter

FDA is proposing to require that a responsible official of the notifier's organization, or the notifier's attorney or agent, date and sign a letter that informs FDA that the notifier is submitting a PBN under proposed § 192.25. In the letter, this official, attorney, or agent would state his position or title and attest to five statements.

1. Statements Regarding the Notifier's Responsibility and the Balanced Nature of the Notice

FDA is proposing to require that a notifier inform FDA that it is the

[12] FDA has not yet issued a final rule based on the GRAS proposal. However, in the GRAS proposal, FDA invited interested persons who determine that a use of a substance is GRAS to notify FDA of such GRAS determinations during the interim between the proposed and final rules (the interim period). During this interim period, FDA has received several dozen GRAS notices, which provided practical experience both with theoretical issues raised by that rulemaking and with practical issues associated with establishing an efficient program.

notifier's view that the bioengineered food is as safe as comparable food and that the intended use of the bioengineered food is in compliance with all applicable requirements of the act (proposed § 192.25(a)(1)). Applicable requirements of the act would include, for example, the requirement under section 409(a) and 402(a)(2)(C) of the act for FDA review and approval of a food additive and the requirement under section 201(n) and 403 of the act that labeling for the food be appropriate. FDA also is proposing that a notifier state that to the best of the notifier's knowledge, the PBN is a representative and balanced submission that includes information, unfavorable as well as favorable, pertinent to the evaluation of the safety, nutritional, or other regulatory issues that may be associated with the bioengineered food (proposed § 192.25(a)(2)). FDA is proposing that the notifier attest to these statements because, under the act, developers of new foods have a responsibility to ensure that the foods they offer to consumers are safe and in compliance with all requirements of the act (57 FR 22984 at 22985).

FDA is proposing the standard ''as safe as'' because this is the standard that the agency currently uses to evaluate a notice that is submitted under the 1996 procedures. Because the proposed standard is a comparative standard (''as safe as''), it takes into account circumstances such as the existence of naturally occurring toxicants in many plants (e.g., solanine that occurs naturally in potatoes). As discussed below (see section VIII.G.1 and proposed § 192.25(g)(1)), FDA also is proposing that the notifier provide a justification for selecting a particular food or foods as the ''comparable food'' to which the notifier will compare the bioengineered food.

2. Statements Regarding the Availability of Data and Information for FDA's Review

FDA is proposing to require that a notifier agree to make relevant data or information that are not included in the PBN available to FDA upon request while FDA is evaluating the PBN or for cause (proposed § 192.25(a)(3)). FDA is proposing this requirement to ensure that the agency will have access to relevant data or other information if safety questions arise after the bioengineered food enters commercial distribution. This proposed requirement will also continue a practice that began under the 1996 procedures.

FDA also is proposing that a notifier agree to two procedures for making such data or information available to FDA (proposed § 192.25(a)(4)). The first procedure is to allow FDA to review and copy these data or information at a specified address during customary business hours. The second procedure is to send these data or information to FDA. FDA is proposing that a notifier agree to both of these two procedures to provide flexibility and efficiency to both the notifier and the agency.

3. Statement Regarding Public Disclosure

FDA is proposing that a notifier inform FDA as to whether the notifier claims that the existence of a PBN, or any or all of the data or information in the PBN, is exempt from disclosure under the FOIA and explain the basis for that claim (proposed § 192.25(a)(5)). FDA is proposing these requirements in light of the significant public interest in bioengineered foods. These requirements would ensure that FDA is aware of the notifier's position regarding the availability for public disclosure of the existence and content of a PBN. In addition, FDA believes that these requirements would alert a notifier that the data or information contained in a PBN are available for disclosure unless the applicable criteria for exemption are satisfied.

As discussed more fully below, this proposed rule assumes that the existence and content of a PBN is available for public disclosure unless the notifier establishes that the existence of the notice constitutes confidential commercial information or that specific data or information in the PBN constitute a trade secret or confidential commercial information. Thus, the proposed rule acknowledges that there could be circumstances in which the existence or content (or a portion of the content) of a PBN would be eligible for an exemption from public disclosure.

B. Part II: Synopsis

FDA is proposing that the first section of a PBN be a synopsis (proposed § 192.25(b)) that includes the same information that FDA is recommending for inclusion in a presubmission consultation (see proposed § 192.10(f)(3) and section VI.C of this document). The synopsis would be a concise document that describes the bioengineered food in a manner that is suitable for preparing a publicly accessible list of PBN's (see proposed § 192.40(c)(1)(i) and section X.A of this document).

C. Part III: Status at Other Federal Agencies and Foreign Governments

FDA is proposing that a notifier inform FDA of the status of any prior or ongoing evaluation of the bioengineered plant, or food derived from such a plant, by USDA/APHIS and EPA (proposed § 192.25(c)(1) and (c)(2)). The proposed regulation is consistent with the recommendations in a report issued in April 2000 by the National Research Council (the 2000 NRC Report) (Ref. 14). That report recommended, among other things, that FDA, EPA, and USDA/APHIS establish a process to ensure appropriate and timely exchange of information between agencies about bioengineered pest-protected plants. Under the regulation, FDA would be aware of any issues still pending at those agencies, that are relevant to FDA's evaluation of the bioengineered food in question. When necessary and appropriate, FDA would contact APHIS, EPA, or both agencies about their evaluation of the bioengineered plant.

In addition, as discussed previously in this notice, the purpose of this notification program is to provide FDA with the information necessary to determine whether there are legal status questions concerning a bioengineered food so as to permit FDA to carry out its enforcement responsibilities. This would include its responsibilities to enforce section 402(a)(2)(B) of the act, which addresses foods containing illegal pesticide residues.[13] If the EPA regulatory process regarding the bioengineered food is not yet complete and a tolerance or exemption from tolerance has not been established, the food would not be in full compliance with the law. Accordingly, in these circumstances, FDA would inform a notifier that the agency does not consider the notifier's PBN to satisfy the requirement for premarket notice (see proposed § 192.30(e) and section IX.C.5 of this document).

FDA also is proposing that a notifier inform FDA as to whether the bioengineered food is or has been the subject of review by any foreign government and, if so, describe the status of that review (proposed § 192.25(c)(3)). Foreign countries have instituted various regulatory requirements for bioengineered foods. Information about the status of a notifier's submission(s) to foreign

[13] Under the Federal Insecticide, Fungicide, and Rodenticide Act (FIFRA), EPA registers pesticides, including those introduced into food via bioengineering; under section 408 of the act (21 U.S.C. 346a), EPA sets a tolerance or grants an exemption from a tolerance for pesticide residues in food. FDA has the statutory responsibility to enforce these tolerances or exemptions; under section 402(a)(2)(B), a food is adulterated if it contains a pesticide residue that exceeds an established tolerance or for which there is no tolerance or exemption from the requirement for a tolerance.

countries could be pertinent to FDA's review. For example, some issues raised by a foreign country could be relevant to the legal status of the bioengineered food under the act.

D. Part IV: Method of Development

FDA is proposing that a PBN include data or information about the method of development (proposed § 192.25(d)). Specifically, FDA is proposing that the data or information that a notifier provides regarding the method of development include: (1) Characterization of the parent plant including scientific name, taxonomic classification, mode of reproduction, and pertinent history of development (proposed § 192.25(d)(1)); (2) construction of the vector used in the transformation of the parent plant, with a thorough characterization of the genetic material intended for introduction into the parent plant and a discussion of the transformation method, open reading frames, and regulatory sequences (proposed § 192.25(d)(2)); (3) characterization of the introduced genetic material, including the number of insertion sites, the number of gene copies inserted at each site, and information on DNA organization within the inserts; and information on potential reading frames that could express unintended proteins in the transformed plant (proposed § 192.25(d)(3)); and (4) data or information related to the inheritance and genetic stability of the introduced genetic material (proposed § 192.25(d)(4)). The proposed requirement derives from the 1992 policy, the 1996 procedures, and FDA's experience under the 1996 procedures. FDA requests comment on technological advances in rDNA technology that are likely to result in commercial products and that would not be addressed by the proposed submission requirements. Such comments may result in a modification to the proposed submission requirements.

FDA also is proposing to require that a notifier include a discussion, as necessary, of other relevant data or information about the method of development (proposed § 192.25(d)(5)). This requirement would cover any issues about the method of development that are not explicitly addressed in proposed § 192.25(d)(1), (d)(2), (d)(3), and (d)(4). FDA expects that such issues would be identified during presubmission consultations on specific products.

E. Part V: Antibiotic Resistance

In September 1998, FDA issued for public comment a draft guidance document regarding the use of antibiotic resistance markers in bioengineered plants (the 1998 draft antibiotic resistance guidance (Ref. 15)).[14],[15] Consistent with the thinking presented in that document, FDA is proposing to require that a PBN include a discussion about any newly inserted genes that encode resistance to an antibiotic (proposed § 192.25(e)). Because scientific methods to assess this issue are evolving, in the proposed regulation FDA is recommending that a notifier contact FDA about the agency's current thinking on this topic.

F. Part VI: Substances in the Food

FDA is proposing that a PBN include data or information about substances introduced into, or modified in, the food (proposed § 192.25(f)). These data or information would include data or information about the identity and function of these substances (proposed § 192.25(f)(1)), the level of these substances in the bioengineered food (proposed § 192.25(f)(2)), dietary exposure to these substances (proposed § 192.25(f)(3)), the potential that a protein introduced into the food will be an allergen (proposed § 192.25(f)(4)), and a discussion of other safety issues that may be associated with these substances (proposed § 192.25(f)(5)). In general, the proposed requirements derive from the 1992 policy, the 1996 procedures, and FDA's experience under the 1996 procedures. FDA requests comment on these proposed submission requirements. Such comments may result in a modification to the proposed submission requirements.

1. Covered Substances

FDA is proposing that a notifier provide data or information about substances introduced into, or modified in, the food (proposed § 192.25(f)). Under the regulation, a ''modified substance'' would include a substance that is present in the bioengineered food at an increased level relative to comparable food. Because pesticidal substances are regulated by EPA, the proposed regulation regarding data and information about substances introduced into the plant excludes data and information about pesticidal substances.

As discussed previously (section II of this document), a nonpesticidal substance introduced into food by way of breeding is a food additive if the substance is not GRAS within the meaning of 21 U.S.C. 321(s). Thus, the legal status issues raised by bioengineered foods include the potential that the food would contain an unapproved food additive. In the 1992 policy, FDA expressed its view that there is unlikely to be a safety question sufficient to question the presumed GRAS status of the expression products of the transferred genetic material when the expression products do not differ significantly from other substances commonly found in food and are already present at generally comparable or greater levels in currently consumed foods (57 FR 22984 at 22990). In the 1992 policy, FDA identified proteins, carbohydrates, and fats and oils as substances commonly found in food because those were the substances that were being considered in products under development in 1992.[16] As discussed, rDNA technology has recently begun to be used to introduce multiple genes to generate new metabolic pathways (Ref. 11). As with proteins, carbohydrates, and fats and oils, it is FDA's view that the substances produced by the new pathways would be presumed to be GRAS if they do not differ significantly from other substances that are currently present at generally comparable or greater levels in food and, as such, are safely consumed.

2. Identity, Function, Level, and Dietary Exposure

FDA is proposing that a PBN include data or information about the identity and function of substances introduced into, or modified in, the food (proposed § 192.25(f)(1)) and the level in the bioengineered food of these substances (proposed § 192.25(f)(2)). The proposed regulation derives from the fact that the quantity and quality of scientific evidence required to establish that the use of a substance is safe vary

[14] In the 1992 policy, FDA discussed the role of genes that encode resistance to an antibiotic as part of the development of some bioengineered foods (57 FR 22984 at 22987). In the APH(3')II final rule, FDA approved the use of the enzyme expressed by one such gene, the kan^r gene encoding resistance to kanamycin, in the development of new varieties of cotton, oilseed rape, and tomatoes. Between November 1996, and February 1997, FDA had several discussions with outside experts to determine whether circumstances exist under which FDA should recommend that a given antibiotic resistance gene not be used in crops intended for food use, and if so, to delineate the nature of those circumstances. Based on these discussions, FDA issued for public comment the 1998 draft antibiotic resistance guidance. FDA intends to issue final guidance in the near future.

[15] A report that describes the consultations that FDA relied on in developing this draft guidance is available (Ref. 16).

[16] As discussed in the 1992 policy, FDA has presumed that transferred nucleic acids would be GRAS (57 FR 22990). Under the proposed regulation, a notifier provides data or other information about transferred nucleic acids in Parts IV (method of development) and V (genes that encode resistance to an antibiotic).

considerably depending upon the chemical, physical, and physiological properties of the substance and its estimated dietary exposure.

FDA is proposing that a notifier include either: (1) An estimate of dietary exposure to substances introduced into, or modified in, the food (proposed § 192.25(f)(3)(i)); or (2) a statement that explains the basis for the notifier's conclusion that an estimate of dietary exposure to these substances is not needed to support safety (proposed § 192.25(f)(3)(ii)). As discussed in the 1992 policy (57 FR 22984 at 22998), many substances that would be introduced into, or modified in, a bioengineered food would be present in the bioengineered food at a relatively low level. For example, since 1994, developers have completed more than 45 consultations about bioengineered foods, most of which contain newly introduced or modified enzymes (Ref. 6). In most cases, an estimate of dietary exposure to these enzymes was not critical to the safety assessment. However, this is not always the case, even for enzymes that would be present in food at a low level. For example, in the case of the enzyme APH(3′)II, FDA relied, in part, on the estimated dietary exposure to APH(′)II in concluding that active APH(3′)II in food would not interfere with the clinical efficacy of the orally administered antibiotic, kanamycin (59 FR 26700 at 26703). Thus, the particular circumstances will determine whether an actual estimate of dietary exposure to a substance that is introduced into a food plant is needed to support the notifier's view that the bioengineered food is as safe as comparable food.

3. Allergenicity

FDA is proposing that a notifier include a discussion of the available data or information that address the potential that a protein introduced into the food will be an allergen (proposed § 192.25(f)(4)). The proposed regulation is consistent with the 1996 procedures, which recommend that a notifier provide FDA with information regarding any known or suspected allergenicity and a discussion of the available information about the potential for the bioengineered food to induce an allergic response. Because scientific methods to assess this issue are evolving, in the proposed regulation FDA is recommending that a notifier contact FDA about the agency's current thinking on this topic.

FDA is developing guidance for evaluating the potential allergenicity of proteins introduced into bioengineered foods and intends to make that draft guidance available for public comment in the near future. The draft guidance will be based in part on recommendations made by scientific experts who attended a public scientific conference on food allergy and bioengineered foods that FDA, EPA, and USDA jointly hosted on April 18 and 19, 1994 (the 1994 allergenicity conference (Ref. 17)).[17]

4. Other Safety Issues

It is impracticable for FDA to either anticipate all classes of substances that could be introduced into food or provide specific guidance about each of those classes of substances. Therefore, FDA is proposing that a notifier provide a discussion of data or information relevant to other safety issues that may be associated with the substances introduced into, or modified in, the food (proposed § 192.25(f)(5)). This requirement would cover any issues that are not explicitly addressed in proposed § 192.25(f)(1), (f)(2), (f)(3), and (f)(4) regarding substances introduced into, or modified in, the food. Such issues could include, for example, the digestibility or toxicity of an introduced protein. FDA expects that such issues would be identified during presubmission consultations on specific foods.

G. Part VII: Data and Information About the Food

FDA is proposing that a notifier provide data or information about the bioengineered food (proposed § 192.25(g)). These data or information would include a justification for selecting a particular food(s) as ''comparable food'' (proposed § 192.25(g)(1)); a discussion of historic uses of the comparable food(s) (proposed § 192.25(g)(2)); data or information comparing the composition and characteristics of the bioengineered food to those of comparable food(s), with emphasis on significant nutrients, naturally occurring toxicants and antinutrients, and any intended changes to the composition of the food (proposed § 192.25(g)(3)); any other information relevant to the safety, nutritional, or other regulatory assessment of the bioengineered food (proposed § 192.25(g)(4)); and a narrative that explains the basis for the notifier's view that the bioengineered food is as safe as comparable food(s) and that the bioengineered food is otherwise in compliance with all applicable requirements of the act (proposed § 192.25(g)(5)). In general, the proposed requirements derive from the 1992 policy, the 1996 procedures, and FDA's experience under the 1996 procedures. FDA discusses the details of this proposed regulation immediately below. FDA requests comment on the proposed submission requirements regarding the food. Such comments may result in a modification to the proposed submission requirements.

1. Comparable Food

FDA is proposing that the notifier provide a justification for selecting a particular food or foods as the ''comparable food'' to which the notifier will compare the bioengineered food (proposed § 192.25(g)(1)). The proposed requirement is based on the 1992 policy and FDA's experience under the 1996 procedures.

Ordinarily, the comparable food would be the parental variety or commonly consumed varieties of the parent plant (57 FR 22984 at 22996 and Ref. 5)). However, when the intended effect of the transformation is to change the composition of the food, it may be appropriate to also compare the composition and characteristics of the bioengineered food to that of another commonly consumed food. For example, if an oilseed crop is modified to produce an oil that has a higher content of a particular fatty acid than commonly consumed varieties, it may be appropriate to also compare the composition and characteristics of the bioengineered food to that of a food that contains that fatty acid. FDA expects that any issues associated with the appropriate selection of comparable food(s) would be identified during presubmission consultations on specific products.

2. Historic Uses of the Comparable Food

FDA is proposing that the notifier provide a discussion of historic uses of the comparable food(s) to which the notifier will compare the bioengineered food (proposed § 192.25(g)(2)). Several

[17] The goal of the 1994 allergenicity conference was to foster a scientific dialogue to assess information that was available at that time regarding the characteristic properties of food allergens and the methods that are available to assess allergenicity. The scientists who participated in this conference noted that serum from an individual who is sensitive to a known allergenic source can be used to assess the allergenic potential of proteins derived from that source. These scientists acknowledged that there are no direct methods to assess allergenicity of proteins from sources that are not known to produce food allergy. However, they suggested that the possibility that a new protein will cause an allergic reaction can, to some degree, be evaluated by comparing its similarity to characteristics of known food allergens. If a protein does not have characteristics of known food allergens, the potential that the protein would cause an allergic reaction is minimized. Because exceptions have been reported for the observed characteristics of allergens, and no one factor is fully predictive, the scientists recommended that an assessment of allergenicity be based on all available information.

notifiers who have consulted with FDA under the 1996 procedures have included such a discussion (e.g., as part of their description of the applications or uses of the bioengineered food). FDA has found that such a discussion is particularly helpful in identifying the potential uses of the bioengineered food, regardless of whether those uses are specifically targeted by the notifier.

3. Comparing the Composition and Characteristics of the Bioengineered Food to That of Comparable Food

Consistent with the 1992 policy, the 1996 procedures, and FDA's experience under the 1996 procedures, FDA is proposing that a notifier provide data or information comparing the composition and characteristics of the bioengineered food to those of comparable food(s), with emphasis on changes in the levels of significant nutrients and naturally occurring toxicants and antinutrients (proposed § 192.25(g)(3)(i) and (g)(3)(ii)). Such changes could raise legal status questions such as whether the name of the food adequately describes the food or whether the food is adulterated within the meaning of section 402(a)(1) of the act.

Consistent with the 1992 policy, the 1996 procedures, and FDA's experience under the 1996 procedures, FDA is proposing that a notifier provide data or information about any intended changes to the composition or characteristics of the food (proposed § 192.25(g)(3)). Such changes could raise legal status questions such as the appropriate common or usual name for the food. For example, FDA has been notified about a modification to a canola variety of rapeseed to produce an oil with a modified fatty acid composition. Because the name that is most often used to describe oil derived from the parent plant (i.e., canola oil) did not accurately reflect the characteristic properties of the bioengineered oil, the notifier suggested a new name for the oil.

Intended changes to the composition or characteristics of the food also could raise safety questions about the food. For example, it is possible that a developer could modify corn so that the corn becomes a significant dietary source of the nutrient folic acid. Folic acid is used to fortify many foods, including breakfast cereals, because of the relationship between consumption of folic acid and a reduced risk of neural tube defects (21 CFR 101.79). However, excess folic acid in the diet can mask the signs of vitamin B_{12} deficiency. Thus, an increased level of folic acid in a food such as corn, which is commonly used in breakfast cereals, could raise safety or other regulatory issues.

Under proposed § 192.25(g)(3), intended changes to the composition of food include modifications that are intended to reduce the level of a substance in food. For example, it is possible that a modification would be intended to decrease the level of a substance that is considered undesirable, such as the phytate that naturally occurs in soybeans. It also is possible that a modification would be intended to reduce the fat content of a food. As with intended increases in the level of substances already in food, changes that decrease the level of substances already in food could raise legal status questions such as the appropriate common or usual name for the food.

4. Other Relevant Information

Consistent with the 1992 policy, the 1996 procedures, and FDA's experience under the 1996 procedures, FDA is proposing that a notifier provide a discussion of any other information relevant to the safety, nutritional, or other regulatory assessment of the bioengineered food (proposed § 192.25(g)(4)). This requirement would cover any legal status issues about the food that are not explicitly addressed in proposed § 192.25(g)(1), (g)(2), and (g)(3). For example, under proposed § 192.25(g)(4), a notifier could discuss the basis for proposing a specific common or usual name for a bioengineered food, or any other proposed labeling that would accompany the bioengineered food. FDA expects that such issues would be identified during presubmission consultations on specific foods.

FDA requests comment on whether this rule should also include a requirement that a premarket notice for a bioengineered food include methods by which the food could be detected. In particular, the agency is interested in comments on the circumstances under which such methods should or should not be required, and the rationale for any such requirement (e.g., the modification to the crop makes the food acceptable for animal feed but unacceptable for human food). The agency is also interested in comments on whether any such required methods should be for raw agricultural commodities, representative finished foods likely to contain the modified food, or both; and whether any such required methods should contain sufficient information, such as primer sequences, to enable technically-proficient non-government laboratories to use them; and what other criteria, if any, there should be for required methods (e.g., cost). Such comments may result in a modification to the proposed submission requirements.

5. Narrative

FDA is proposing to require that a notifier provide a narrative that explains the basis for the notifier's view that the bioengineered food is as safe as comparable food and that the bioengineered food is otherwise in compliance with all applicable requirements of the act (proposed § 192.25(g)(5)). The narrative would provide an integrated discussion of the data and information submitted in a PBN. FDA is proposing this requirement because the notifier has the responsibility for determining that the intended use of the bioengineered food is as safe as comparable food and is otherwise lawful. Absent an integrated discussion of the underlying data and information, the basis for the notifier's conclusion about the legal status of the bioengineered food may not be apparent.

IX. Agency Administration of a Premarket Biotechnology Notice

A. Filing Decision

FDA is proposing to do an initial evaluation of the notice within 15 working days to see whether the notice appears to include all elements required under §§ 192.20 and 192.25 (proposed § 192.30(a)). FDA also is proposing to file a PBN that appears to include all required elements, and to contact a notifier to explain what is missing if the PBN does not appear to include all required elements. FDA is proposing this ''filing decision'' because the timeframe for the agency's response to the notifier (i.e., 120 days (see proposed § 192.5(c) and section V.C of this document) is relatively short. To enable the agency to complete its evaluation in this period, it is essential that the agency have a complete notice when the 120-day period begins.

The proposed timeframe for the filing decision (i.e., within 15 working days) is consistent with the timeframe for the filing decision for a food additive petition (§ 171.1(i)(1)). The proposed process that ''FDA will inform the notifier'' provides flexibility for the mechanism whereby FDA contacts a notifier. FDA expects to contact the notifier by telephone or possibly by electronic mail and expects that a notifier would provide the missing material promptly. However, should circumstances warrant (e.g., FDA is unable to reach a notifier by telephone, or the notifier does not provide the

materials promptly), under the regulation, FDA could send a letter or telefax to the notifier explaining that the agency had received, but not filed, the PBN and the reasons therefor.

Under proposed § 192.30(a)(1), CFSAN will inform CVM about any PBN that it files. Regardless of whether the bioengineered food would be used in human food, food for animals, or both, this inter-Center communication will ensure that both Centers are aware of all bioengineered foods that are nearing commercialization.

B. Acknowledgment Letter

FDA is proposing to send, within 15 working days of filing a notice, a letter to the notifier (or, when applicable, the notifier's agent) informing the notifier of the date on which FDA filed the PBN (proposed § 192.30(b)). As a practical matter, such a letter would acknowledge receipt as well as inform the notifier of the date of filing.

C. Response Letter

FDA is proposing to respond to a notifier within 120 days of filing a notice (proposed § 192.30(c)). Because all submissions will be sent to CFSAN, CFSAN would issue the response to the notifier, regardless of whether the intended use of the bioengineered food is in human food, food for animals, or both. A response from CFSAN would make clear that CFSAN was aware of, and thus had been notified about, all bioengineered foods, regardless of their intended use.

As with any correspondence, the particular circumstances will determine the full text of the agency's letter. However, the agency believes that a letter would likely fall into one of four general categories (proposed § 192.30(d)(1), (d)(2), (d)(3), and (d)(4)). FDA discusses each of these four categories immediately below.

1. General Categories for FDA's Response

a. *Letter that extends FDA's evaluation*. FDA is proposing that the agency could inform a notifier that the agency is extending its evaluation of the premarket notice by 120 days (proposed § 192.30(d)(1)). Under the regulation, in this letter FDA would also inform the notifier that the agency expects that the bioengineered food will not be marketed during the extended evaluation period.

Ordinarily, FDA expects to send a final response to a notifier within 120 days, particularly if a prospective notifier discusses relevant scientific and regulatory issues with FDA, prior to submitting a PBN about a bioengineered food (see proposed § 192.10 and section VI of this document). However, there are several circumstances that could prevent the agency from completing its evaluation within that time period. For example, FDA may need to extend the review time if a notifier did not participate in the presubmission consultation program; the issues raised by a particular bioengineered food could be particularly novel and complex; parts of a submission could require clarification, amplification, or correction; or the submission could be poorly written or be of such poor scientific quality that it precludes timely evaluation by the agency.

As discussed previously, FDA is issuing this proposed rule to ensure that it has the appropriate amount of information about bioengineered foods and to help to ensure that all market entry decisions by the industry are made consistently and in full compliance with the law. The goal of this rulemaking would not be achieved if a bioengineered food entered commercial distribution before FDA had completed its evaluation of the applicable notice.

b. *Letter that the notice does not provide a basis*. FDA is proposing that the agency have an option to inform a notifier that the premarket notice does not provide a basis for the notifier's view that the bioengineered food is as safe as comparable food or is otherwise lawful (proposed § 192.30(d)(2)). In so doing, FDA would inform the notifier of the reasons for this conclusion. Under the regulation, in this letter FDA would also inform the notifier that the agency expects that the bioengineered food will not be marketed.

FDA has had experience with another food program, the proposed notification program for GRAS substances, in which some submitted notices do not provide a basis for the notifier's view that the intended use of a substance is lawful (Ref. 18). The underlying reasons why the applicable notices have not provided a basis for a GRAS determination have been quite varied. Likewise, there could be various reasons why a premarket notice does not provide a basis for the notifier's view that the bioengineered food is as safe as comparable food or is otherwise lawful. For example, the notice may not provide a basis for the notifier's view that a substance introduced into the bioengineered food is not an unapproved food additive or that the bioengineered food would not be misbranded. As another example, the notice may not provide a basis to conclude that a bioengineered food that contains an unusually high level of a naturally occurring toxicant would not be adulterated. As a third example, if the poor quality of a notice makes it difficult for the agency to fully evaluate the notice, regardless of the time period available, FDA may inform the notifier of the inadequacies of the notice rather than extend its evaluation of the notice for another 120 days.

If a notice about a bioengineered food does not provide a basis to conclude that a bioengineered food is as safe as comparable food or is otherwise lawful, that food could be adulterated or misbranded and should not be marketed. If a notifier initiates commercial distribution of a bioengineered food after being informed that the applicable notice is not adequate, FDA will carefully and completely review the legal status of the applicable food and will use all available options to ensure that the food is fully in compliance with all provisions of the act. In particular, in such circumstances, the agency fully intends to bring to bear the complete range of its authorities and resources, including its authority under section 704 of the act (21 U.S.C. 374) to conduct inspections and investigations, collect samples, and perform analyses, as well as its authority under sections 705 and 903 of the act (21 U.S.C. 375 and 393) to engage in publicity and public education. When the agency concludes through the application of these resources that a food is adulterated, misbranded, or otherwise not in full compliance with the act, FDA will utilize the act's legal sanctions, as appropriate, including in rem seizure of violative foods and injunction proceedings against, or criminal prosecution of, those responsible for distributing such foods.

c. *Letter that FDA has no questions*. If, based on its evaluation of a notice, FDA has no questions regarding the notifier's view that the bioengineered food is as safe as comparable food and is otherwise lawful, FDA would inform a notifier of that fact (proposed § 192.30(d)(3)). Because the evaluation of food safety is a time-dependent judgment that is based on general scientific knowledge as well as specific data and information about the food, FDA would qualify its statement to clarify that the agency has no questions ''at this time.'' This proposed response is similar to the letters that FDA has issued in response to submissions received under the 1996 procedures.

d. *Letter that a notifier has withdrawn the notice*. Under proposed § 192.20(g), if a notifier requests that FDA cease to evaluate a PBN, FDA would retain the PBN in its files and classify the PBN as ''withdrawn.'' In such a circumstance,

FDA would bring the notification process to closure by sending the notifier a letter acknowledging that the agency had received a withdrawal letter and had ceased to evaluate the PBN, effective on the date that FDA received the letter (proposed § 192.30(d)(4)). This proposed response is similar to responses issued by FDA under the proposed notification program for GRAS substances when the notifier requests that FDA cease to evaluate a GRAS notice (Ref. 18).

2. Status of the Bioengineered Food at EPA

If the bioengineered food contains a pesticidal substance, FDA is proposing that FDA's response letter will describe the status of the bioengineered food at EPA (proposed § 192.30(e)). If all applicable regulatory processes at EPA have come to closure (proposed § 192.30(e)(1)), FDA would say so and would respond as described above. As discussed above, if regulatory processes at EPA regarding the bioengineered food are still pending, FDA would inform the notifier that FDA does not consider the PBN to satisfy the requirement for premarket notice (proposed § 192.30(e)(2)).

X. Public Disclosure

FDA is proposing to inform notifiers about: (1) The public disclosure provisions that apply to the existence and content of a PBN; (2) procedures that a notifier should use to inform FDA of the notifier's view about whether the existence or content of a PBN is exempt from public disclosure; and (3) the criteria that FDA uses to evaluate the notifier's view (proposed § 192.40(a) through (d)). FDA also is proposing the procedures that FDA will use to disclose the agency's evaluation of, and response to, each PBN (proposed § 192.40(e)). This part of the regulation would ensure that both notifiers and the interested public have information about provisions that derive from the FOIA. FDA requests comment on these proposed provisions. Such comments may result in a modification to the proposed requirements.

A. Existence of the Notice

FDA is proposing that the existence of a filed PBN ordinarily is available for public disclosure on the date that FDA files it (proposed § 192.40(a)(1)). Under the regulation, a notifier who believes that the existence of a PBN is exempt from disclosure would be responsible for asserting that claim (proposed § 192.40(a)(2)). If a notifier claims that the existence of a PBN is confidential, FDA would evaluate that claim and would disclose the existence of the PBN, unless FDA determines that the criteria for exemption from disclosure in § 20.61 are satisfied (proposed § 192.40(a)(3)). If FDA determines that the existence of a PBN is confidential at the time that the agency files it, the existence of the PBN would become available for public disclosure, in accordance with § 20.61, when the criteria for exemption from disclosure are no longer satisfied (proposed § 192.40(a)(4)).

FDA has previously discussed the FOIA, and the exemption from public disclosure that the FOIA provides for trade secrets and confidential commercial information, with respect to data or information that a developer submits to FDA during a presubmission consultation (section VI.B of this document). Consistent with that discussion, FDA believes that, in most cases, the fact that a notifier had submitted a PBN would not constitute confidential commercial information. Nevertheless, there could be circumstances in which a notifier submits a PBN and has grounds to claim that the existence of the PBN should not be available for public disclosure.

FDA is proposing to make a list of filed PBN's easily accessible to the public (e.g., by placing the information on the Internet or in a paper or electronic file that is available at FDA for public review and copying) (proposed § 192.40(b)). FDA expects that the list of PBN's would include most or all of the information in the synopsis of the PBN. Consistent with current procedures for updating an easily accessible inventory of notices received for another foods program (i.e., the GRAS notification program; see Ref. 18), FDA expects to update the list of filed PBN's on an approximately monthly basis. The proposed regulation to make this information easily accessible to the public is responsive to the input that FDA received at the public meetings that it convened in 1999, and to the comments that FDA received as a result of those meetings.

B. Content of the Notice

FDA is proposing that the data or information in a PBN ordinarily are available for public disclosure on the date that FDA files the PBN (proposed § 192.40(c)(1)). Under the regulation, a notifier who believes that some or all of the content of a PBN is exempt from disclosure would be responsible for asserting that claim (proposed § 192.40(c)(2)). If a notifier claims that some or all of the content of a PBN is confidential, FDA would evaluate that claim. FDA would disclose the content of the PBN, unless FDA determines that the criteria for exemption from disclosure in § 20.61 are satisfied (proposed § 192.40(c)(3)). If FDA determines that some or all of the content of a PBN is confidential at the time that the agency files it, the data or information in question would become available for public disclosure, in accordance with § 20.61, when the criteria for exemption from disclosure are no longer satisfied (proposed § 192.40(c)(4)).[18]

Consistent with the agency's discussion of its view regarding the disclosability of the data or information provided to FDA during a presubmission consultation (section VI.B of this document), FDA believes that, in most cases, most of the data or information in a PBN would not constitute a trade secret. For example, very few of the submissions that FDA has received under its current consultation program identify specific data or information that the developer claims to be exempt under § 20.61. However, when the existence of the PBN is exempt from disclosure, all data and information in the submission would necessarily be exempt from disclosure.

FDA anticipates that the PBN will be easily accessible to the public. Under EFOIA and FDA's proposed rule to implement EFOIA, frequently requested records, or records that are likely to be requested frequently, are placed in an ''electronic reading room.'' As discussed above (see section VII.C of this document), FDA has tentatively concluded that it is likely that each submitted PBN would be requested under FOIA multiple times. Therefore, these records will be easily accessible to the public because they will be available electronically (proposed § 192.40(d)).

C. Disclosure of FDA's Evaluation of, Response to, a Notice

FDA is proposing to make two agency records associated with a PBN easily accessible to the public (e.g., by placing the information on the Internet or in a paper or electronic file that is available at FDA for public review and copying) (proposed § 192.40(e)(1)). The applicable records include the text of the letter issued by the agency in response to each PBN, and the text of the agency's completed evaluation of each PBN.

[18] Section 20.61 describes both criteria for exemption from disclosure and procedures that apply in circumstances where FDA disagrees with the view of a person who submits data or information that some or all of those data or information satisfy the criteria for exemption from disclosure.

The proposed regulation commits to make available the ''text'' of the agency's letter and the agency's memorandum, rather than a ''copy'' of these records, to enable FDA to satisfy the regulations by a mechanism other than providing a physical copy of these records (e.g., by providing an electronic copy on the Internet). Consistent with current procedures for updating an easily accessible inventory of notices received for another foods program (i.e., the GRAS notification program; see Ref. 18), FDA expects to add the text of applicable agency letters and memoranda to the easily accessible file on an approximately monthly basis. The proposed regulation to make this information easily accessible to the public is responsive to the input that FDA received at the public meetings that it convened in 1999, and to the comments that FDA received as a result of those meetings.

As discussed previously (proposed § 192.30(c)(1) and section IX.C.1 of this document), a notifier could receive a letter that informs the notifier that FDA is extending its evaluation of the premarket notice by 120 days. Under the proposed regulation to make the agency's response to a PBN easily accessible to the public, such an extension letter would be easily accessible to the public. When FDA issues a final letter regarding the applicable notice, it is likely that the agency would replace the extension letter with the final letter rather than making both letters easily accessible. The fact that the notifier had received an extension letter would still be readily apparent (e.g., because the date of the final response letter would be more than 120 days from the date of the extension letter). In addition, it is likely that FDA's final response letter would acknowledge the fact that the agency had sent a letter extending its evaluation.

XI. Proposed Regulations Regarding Bioengineered Foods That Would Be Used in Animal Feed

FDA is proposing to require the submission to the agency of data and information regarding bioengineered plant-derived foods that would be used in animal feed. FDA's proposal also includes a recommendation that prospective notifiers participate in a presubmission consultation program. In general, these proposed regulations regarding bioengineered foods intended to be fed to animals (proposed part 592) parallel the agency's proposed regulations for human food (proposed part 192). The following discussion addresses areas of importance in the proposed animal feed regulations (proposed part 592).

The number of different species encompassed by the term ''animal,'' as used in the act, is extraordinarily broad. CVM has regulatory authority over the food consumed by all nonhuman species, ranging from those raised in aquaculture, such as lobster and fish, to pets, birds, and the traditional classes of farm animals like cattle, swine, and horses. These animals may consume parts of a bioengineered plant that are not eaten by people. For example, cattle and other herbivores eat the forage portion of the corn plant (stalk and leaves), which has no human food applications. In addition, animals may eat the byproducts or residues left over from the production of human foods. For example, soybean meal, which is a source of dietary protein widely used in animal diets, is a byproduct from the production of soybean oil, which is primarily used in human foods. As another example, broken rice, which is not desirable for human food, is a major pet food ingredient.

Undesirable substances can concentrate in the byproducts or residues left over from the production of human foods. For example, gossypol, a naturally occurring toxicant in cotton, concentrates in cottonseed meal, which is a byproduct obtained during the manufacture of cottonseed oil. The presence of gossypol limits the use of cottonseed meal in animal feed. As another example, some substances that can cause enlargement of the thyroid naturally occur in rapeseed plants and are concentrated in the meal (commonly called canola meal) that is a byproduct obtained during the manufacture of low erucic acid rapeseed oil (comonly called canola oil). These compounds must remain at a low level for the canola meal to be useful in animal feed.

In some cases, bioengineered foods could make up most of an animal's diet, which the animal could consume for its entire lifespan. For example, in a single year a high-producing dairy cow could eat as much as 6,000 pounds of a nutritional supplement containing added energy and protein. This supplement could contain up to 80 percent corn grain and 20 percent soybean meal. The same dairy cow could also consume as much as 4,380 pounds of fermented corn forage and ears (i.e., whole plant corn silage in that same year). Fattening beef cattle could eat a diet based on 10 percent whole plant corn silage, 80 percent corn grain, and 9 percent soybean meal. A typical swine diet contains 74 percent corn grain and 23 percent soybean meal, while broiler chicks might eat a ration that is 58 percent corn grain and 35 percent soybean meal. Because these foods may comprise such a large percentage of an animal's diet, an undesirable substance that is introduced into a bioengineered food, even at a low level, has the potential to adversely affect an animal that eats the food.

Because of these factors, notifiers in assembling a PBN to address bioengineered foods to be consumed by animals should pay particular attention to the intended use of the bioengineered food, including the species expected to consume it; the function and level of all introduced or modified substances; and any changes in the composition and characteristics of the food. FDA has concluded that the notices should contain adequate information about any potential safety issues for all substances introduced into, or modified in, the food. Concerns associated with any changes in the composition or characteristics of the bioengineered food should also be addressed. Notifiers should be aware that in some cases, animal diets are formulated using different nutritional parameters than those used by human nutritionists. For example, when a diet is formulated for cattle, nutritionists utilize parameters such as neutral detergent fiber and acid detergent fiber in evaluating the suitability of a potential ingredient. Notices for bioengineered plants intended to be fed to animals should incorporate these differences in how ingredients are evaluated for their nutritional content.

XII. Paperwork Reduction Act

This proposed rule contains information collection provisions that are subject to review by the Office of Management and Budget (OMB) under the Paperwork Reduction Act of 1995 (the PRA) (44 U.S.C. 3501–3520). A description of these provisions is given below with an estimate of the annual reporting and recordkeeping burden. Included in the estimate is the time for reviewing instructions, searching existing data sources, gathering and maintaining the data needed, and completing and reviewing each collection of information.

FDA invites comments on: (1) Whether the proposed collection of information is necessary for the proper performance of FDA's functions, including whether the information will have practical utility; (2) the accuracy of FDA's estimate of the burden of the proposed collection of information, including the validity of the methodology and assumptions used; (3) ways to enhance the quality, utility, and clarity of the information to be

collected; and (4) ways to minimize the burden of the collection of information on respondents, including through the use of automated collection techniques, when appropriate, and other forms of information technology.

Title: Premarket Notice Concerning Bioengineered Food

Description: Section 701 of the act sets forth authority to issue regulations for the efficient enforcement of the act. Section 201 of the act defines terms utilized within the act. Food is defined by section 201 of the act to mean: ''(1) articles used for food or drink for man or other animals, (2) chewing gum, and (3) articles used for components of any such article.'' Thus, the act clearly incorporates animal feed and drink into its definition of food.

Section 403 of the act prohibits the misbranding of food. Section 402 of the act prohibits the adulteration of food. Section 409 of the act establishes a premarket approval requirement for ''food additives.'' Section 201(s) of the act provides a two-step definition of ''food additive.'' The first step broadly includes any substance the intended use of which results or may reasonably be expected to result, directly or indirectly, in its becoming a component or otherwise affecting the characteristics of food, which under section 201(f) of the act includes animal food. The second step, however, excludes from the definition of food additive substances that are GRAS by qualified experts.

In this proposed rule, FDA is proposing to require the submission to the agency of data and information regarding plant-derived bioengineered foods. The proposed rule refers to foods derived from plant varieties that are developed using rDNA technology as ''bioengineered foods.'' FDA is proposing that this submission be made at least 120 days prior to the commercial distribution of such foods. The notice would include data and information about the bioengineered food and a narrative that provides an integrated discussion of those data and information. The notifier would maintain a record of relevant data and information that are not included in the notice. FDA would make the existence of the notice, and the agency's evaluation of and response to the notice, easily accessible to the public. The content of the notice would be publicly available consistent with the FOIA and other federal disclosure statutes. FDA is also proposing to include in the regulation a recommendation that prospective notifiers consult with the agency to identify and discuss relevant safety, nutritional, or other regulatory issues regarding a bioengineered food.

Description of Respondents: Developers, manufacturers, distributors, or importers of food.

FDA estimates the burden of this collection of information as follows:

TABLE 1.—ESTIMATED ANNUAL REPORTING BURDEN [1]

21 CFR Section	No. of Respondents	Annual Frequency per Response	Total Annual Responses	Hours per Response	Total Hours
192.10(e) through (g)	20	1	20	4	80
192.10(h)(1)	20	1	20	0.5	10
192.10(h)(2)	20	1	20	8	160
192.10(h)(3)(i)	2	1	2	2	4
192.10(h)(3)(ii)	2	1	2	5	10
192.20(b)(2)(i)	2	1	2	2	4
1192.20(b)(2)(ii)	2	1	2	5	10
192.20(c)(1)	20	1	20	8	160
192.20(c)(2)	20	1	20	8.4	168
192.20(d)	0.5	1	0.5	20	10
192.20(e)	0.5	1	0.5	2	1
192.20(g)	0.5	1	0.5	1	0.5
192.20(a) through (b)(1) and 192.25	20	1	20	190	3,800
Total					4,417.50

[1] There are no capital costs or operating and maintenance costs associated with this collection of information.

TABLE 2.—ESTIMATED ANNUAL RECORDKEEPING BURDEN [1]

21 CFR Section	No. of Recordkeepers	Annual Frequency per Recordkeeping	Total Annual Records	Hours per Recordkeeper	Total Hours
192.25(a)(2)	20	1	20	19	380
Total					380

[1] There are no capital costs or operating and maintenance costs associated with this collection of information.

Under the proposed rule, a notifier sends a notice regarding a bioengineered food to CFSAN regardless of whether the intended use is in human food, food for animals, or both. Because FDA routinely issues separate regulations regarding human food and animal feed, the regulations associated with the notice are codified in two parts of title 21: part 192 and part 592. Both CFSAN and CVM have been consulting with developers of bioengineered foods, and have received submissions of data and information about such foods. Since 1994, FDA has received, on average, eight submissions about bioengineered foods that are ready for commercialization per year. However, given the efficiencies of rDNA techniques, the advances in these techniques, and the rapidly expanding information related to genomes, FDA expects that these techniques are likely to be utilized to an increasingly greater extent. Thus, for the purpose of this analysis FDA is estimating that the agency would receive 20 PBN's per year.

In this analysis, FDA is assuming that all notices about bioengineered foods will encompass both human food and food for animals. FDA is making this assumption because this was the case in approximately 70 percent of submissions that FDA has received since 1994. Because some 30 percent of notices may not encompass both human

food and food for animals, FDA's assumption results in a conservative estimate of the reporting and recordkeeping burden.

Because FDA's analysis assumes that all notices will encompass both human food and food for animals, and because all notices are submitted to CFSAN, regardless of the intended use, FDA is estimating the recordkeeping and reporting burden only for the regulations issued in Part 192. FDA is making no separate estimate of the recordkeeping and reporting burden for the regulations issued in Part 592 because this burden is subsumed within the burden estimated for part 192.

A. Hourly Burden to Prepare a Report (Proposed §§ 192.20(a) through (b)(1) and § 192.25)

FDA contacted five firms that had made one or more submissions under FDA's existing procedures, which are summarized in a guidance first issued in 1996 (the 1996 procedures (Ref. 5)). FDA asked each of these firms for an estimate of the hourly burden to prepare a submission under the current process. Three of these firms subsequently provided the requested information. Based on this information, FDA is estimating that the average time to prepare a submission under the 1996 procedures is 150 hours.

The proposed rule would include some reporting requirements that are not described in the 1996 procedures. After considering the amount of time that firms need, on average, to prepare a submission under the 1996 procedures, and after considering the relative contribution of the additional parts, FDA is estimating that a firm would need 32 to 48 additional hours to prepare the additional sections. For the purpose of this analysis, FDA selected the average of these estimates (i.e., 40 additional hours).

FDA is estimating that the hourly burden to prepare a PBN is the sum of the hours that a firm currently spends, on average, to prepare a submission under the 1996 procedures and the additional hours that a firm would spend, on average, to prepare a submission that addresses requirements that are not described under the 1996 procedures. This sum is 150 hours plus 40 hours, or 190 hours.

B. Hourly Reporting Burden Associated With Confidential Information in a Report (Proposed § 192.20(b)(2)(i) and (b)(2)(ii)

FDA expects that most of the data or information in a PBN will be available for public disclosure. However, a few firms that made submissions under the 1996 procedures included information that they considered to be confidential. To ensure that FDA is aware of confidential information, under the proposed rule a notifier must identify any confidential information in the PBN. FDA is estimating that two PBN's per year would contain confidential information and that it would take a notifier 2 hours to identify this information. Under the proposed rule, a notifier who includes confidential information must prepare and submit an additional paper copy that has been edited to delete confidential information (i.e., a redacted copy). FDA is estimating that it would take a notifier 5 hours to prepare the redacted copy. FDA's estimates of the hourly reporting burden associated with confidential information are based on its familiarity with submissions received under the 1996 procedures, including the content and organization of those submissions. In most cases, the confidential information is present in limited locations within a given submission.

C. Hourly Reporting Burden Associated With Electronic Copies of the Report (Proposed §§ 192.20(c)(1) and (c)(2)

Under the proposed rule, a notifier ordinarily would submit an electronic copy that would be in a format that is suitable for FDA to use to make the PBN available in an electronic reading room (e.g., html format). FDA is estimating that it would take 8 hours to format the electronic disclosure copy. Because a notifier who includes confidential information must redact this copy, FDA is estimating that it would take an additional 4 hours to do the redacting and that this would occur in 2 of the 20 notices submitted per year. Thus, FDA is estimating that it would take a total of 8.4 hours, on average, to prepare the electronic disclosure copy. FDA's estimate of the hourly reporting burden associated with an electronic copy is based on its understanding of the attributes of commonly used software programs that likely would be used to prepare the electronic copy.

Under the proposed rule, a notifier may request a waiver from the proposed requirement to submit an electronic disclosure copy, e.g., because the notifier does not have access to the technology that is needed to prepare such a copy. Because a notifier who requests a waiver need only write an explanation of why he is requesting the waiver, FDA estimates that it would take 0.5 hours to request a waiver. Because most firms who have already consulted with FDA regarding bioengineered foods are large firms who likely would have access to the appropriate technology, FDA is assuming that a request for a waiver will be a rare event, and may not happen at all. Therefore, in this estimate of the hourly burden to prepare a notice, FDA is making the conservative assumption that all firms will submit an electronic disclosure copy, with an hourly burden of 8 hours, and that no firms will request a waiver, which would have a reduced burden of only 0.5 hours.

In addition, in the proposed rule FDA is recommending that a notifier submit an electronic copy that would be formatted in a manner that is suitable for FDA to use to evaluate the PBN (e.g., portable document format (PDF)). A notifier who submits an electronic evaluation copy would submit one less paper copy. FDA is estimating that it would take 8 hours to format the electronic evaluation copy.

D. Hourly Reporting Burden Associated With English Language Translations, Authorization to Incorporate Information by Reference, and Withdrawal (Proposed § 192.20(d), (e), and (g)

Under the proposed rule, a notifier who includes information in a foreign language must include an English translation that is verified to be accurate and complete. Based on its experience, FDA is estimating that it would take 20 hours to prepare such a translation and that this would happen very rarely (i.e., once every 2 years). However, FDA has limited experience with the hourly burden associated with English language translations and specifically requests comment on this estimate.

Under the proposed rule, a notifier who wishes to incorporate by reference a submission made by another party must include a signed statement from that party, authorizing the notifier to incorporate the information by reference, unless the referenced submission is publicly available (e.g., under the FOIA). FDA is estimating that it would take 2 hours to obtain the signed statement and that this would happen very rarely (i.e., once every 2 years). FDA's estimate is based on its experience with incorporation by reference in another food program (i.e., the food additives program).

Under the proposed rule, a notifier who wishes to withdraw a PBN from FDA's consideration must do so in writing. Because this can be done by a simple letter, FDA is estimating that it would take 1 hour. FDA also is estimating that this would happen very rarely (i.e., once every 2 years).

E. Hourly Reporting Burden Associated With a Voluntary Presubmission Consultation Program (Proposed § 192.10(e) through (g), (h)(2), (h)(3)(i), and (h)(3)(ii)

In the proposed rule, FDA is recommending that prospective notifiers participate in a presubmission consultation program. Accordingly, FDA has estimated the hourly burden to notifiers who choose to participate.

Under the proposed rule, a prospective notifier who requests consultation prepares a single submission to address potential uses of the bioengineered food in both human food and food intended for animals. The prospective notifier would send multiple paper copies of the submission to CFSAN, who would contact CVM when the bioengineered food would be consumed by animals. Based on its experience under the 1996 procedures, FDA is estimating that it would take 0.5 hours to prepare the multiple copies that would be submitted for each request for consultation.

Since 1994, FDA has received on average approximately seven requests per year for consultation about bioengineered foods that are under development (i.e., before the foods are ready for commercialization). However, given the efficiencies of rDNA techniques, the advances in these techniques, and the rapidly expanding information related to genomes, FDA expects that these techniques are likely to be utilized to an increasingly greater extent. For the purpose of this analysis FDA is estimating that the agency would receive 20 requests for consultation per year about bioengineered foods. Based on its experience under the 1996 procedures, FDA is estimating that it would take 4 hours to prepare written materials that accompany the original request for consultation and 8 hours to prepare one or several additional written submissions as the consultation proceeds.

To ensure that FDA is aware of confidential information, a notifier who submits confidential information must both identify the confidential information and prepare and submit an additional paper copy that does not contain such information. FDA is estimating that it would take 2 hours to identify such information in both the original and additional submissions and that it would take 5 hours to prepare redacted copies of these submissions. FDA also is estimating that approximately 2 of 20 requests for consultation would include confidential information. FDA's estimates are based on its familiarity with requests for consultation under the 1996 procedures, including the content and organization of written materials that accompanied those requests.

F. Hourly Recordkeeping Burden (Proposed § 192.25(a)(2))

Under the proposal, notifiers must retain the data and other information that provides the basis for their conclusions about the bioengineered food. FDA is assuming that notifiers would establish and maintain an administrative file that contains these data and information. Based on its experience with the content of submissions received under the 1996 procedures, FDA is estimating that the one-time process of establishing such a file would equal 10 percent of the hourly burden already estimated for preparing a PBN (i.e., 10 percent of 190 hours, or 19 hours).

In compliance with the PRA, the agency has submitted the information collection provisions of this proposed rule to OMB for review. Interested persons must submit written comments regarding information collection by February 20, 2001, to the Office of Information and Regulatory Affairs, OMB, New Executive Office Bldg., 725 17th St. NW., rm. 10235, Washington, DC 20503, Attn: Desk Officer for FDA.

XIII. Analysis of Economic Impacts

A. Cost-Benefit Analysis

FDA has examined the economic implications of this proposed rule as required by Executive Order 12866. Executive Order 12866 directs agencies to assess all costs and benefits of available regulatory alternatives and, when regulation is necessary, to select regulatory approaches that maximize net benefits (including potential economic, environmental, public health and safety, and other advantages; distributive impacts; and equity). Executive Order 12866 classifies a rule as significant if it meets any one of a number of specified conditions, including: having an annual effect on the economy of $100 million, adversely affecting a sector of the economy in a material way, adversely affecting competition, or adversely affecting jobs. A regulation is also considered a significant regulatory action if it raises novel legal or policy issues. The Office of Management and Budget has determined that this proposed rule is a significant regulatory action as defined by Executive Order 12866.

B. Background

Bioengineered foods have the potential to offer multiple benefits such as: Improved yield, drought resistance, disease resistance, improved flavor, longer shelf life, increased nutrition, and reduced need for pesticides, among others. Consumers have expressed concern, however, about possible risks that can accompany bioengineered foods. From a public health perspective, the main concerns are allergenicity and toxicity. To ensure that bioengineered foods are as safe as their conventional counterparts, FDA instituted a consultation process with industry to review the development of new bioengineered foods (57 FR 22984 at 22991 and (Ref. 5)). Since then, food producers have completed some 45 consultations about bioengineered foods. To the best of our knowledge all bioengineered foods on the market have gone through FDA's process before they have been marketed.

Under the current process, a developer who intends to commercialize a bioengineered food meets with the agency prior to marketing to identify and resolve relevant safety, nutritional, or other regulatory issues regarding the bioengineered food. When the developer believes that it has accumulated adequate data or information to address and resolve any potential safety or other regulatory issues, the developer submits to FDA a summary of its assessment of these issues. Agency scientists evaluate that summary to determine whether any safety or other regulatory issues are resolved. This process ensures that developers of bioengineered foods are aware of and address safety and other issues prior to marketing.

However, because the consultation process is voluntary, food producers could choose not to notify FDA. Additionally, as food producers in countries that export foods to the United States begin to adopt bioengineered varieties, they may choose not to participate in the voluntary consultation process. Requiring premarket notification for bioengineered foods ensures that FDA will continue to have the opportunity to discuss safety and other regulatory issues with developers before new bioengineered foods go on the market, thereby putting an additional check in place for bioengineered foods.

1. Benefits

Although the current consultation process has been successful in that the agency believes that it has reviewed all of the bioengineered foods that have reached the market, a firm could bypass the current review process. In so doing, the firm may market a product that presents safety or other regulatory issues

that would otherwise have been identified and resolved through consultation with the agency. For example, the food may contain an unexpected allergen or an unapproved food additive, or may be so significantly different from its conventional counterpart that special labeling would be required to enable consumers to identify the difference.

Bioengineering enables developers to expand greatly the range of sources of genes to introduce into foods. Genes code for proteins, and virtually all known food allergens are proteins. Therefore, by transferring a gene from one foodplant to another (and thereby essentially transferring a protein from one food to another) one may transfer the allergenic properties of the first food to the second. Because food allergies can result in serious harm, including anaphylactic shock and death, it is important to know the allergenic profile of food from a plant that is to be used as the source of a gene to be transferred to another foodplant.

It is also possible for a protein that has never been in food before to become an allergen once people become exposed to it in the diet. Therefore, it is also important to know whether a protein from a traditionally nonfood source has characteristics associated with allergenic proteins.

Similarly, because bioengineering enables developers to introduce genetic material from a wider range of sources than has traditionally been possible, there is a greater likelihood that a developer using bioengineering to modify a foodplant may introduce genetic material whose expression results in a substance that is significantly different from substances historically consumed in food. Such a substance may require premarket approval as a food additive because it may not be GRAS.

It is also possible with bioengineering that the newly introduced genetic material may be inserted into the chromosome of a foodplant in a location that causes the food derived from the plant to have higher levels of toxins than normal, or lower levels of a significant nutrient. In the former case, the food may not be safe to eat, or may require special preparation to reduce or eliminate the toxic substance. In the latter case, the food may require special labeling, so that consumers would know that they were not receiving the level of nutrients they would ordinarily expect from consuming a comparable food. It is important therefore for developers to evaluate bioengineered foods from new plant varieties to determine whether the composition of the food has been altered.

The additional provisions of the proposed rule, beyond what was requested by the 1996 procedures, aid in ensuring that relevant safety questions are addressed by the developer. The submission of a narrative of the developer's reasons for concluding that the bioengineered food is as safe as comparable food and its justification of the choice of comparable foods by the notifier will aid in ensuring that all potential safety issues have been considered. Discussion of unsuitable uses will provide FDA the opportunity to ensure that foods that would not be suitable for particular applications are not marketed for those applications. Submission of a redacted copy will aid the agency in protecting confidential information in the notice and in responding to FOIA requests. Submission of an electronic disclosure copy would facilitate the agency's making the PBN available in an electronic reading room.

2. Costs

For developers who would have gone through FDA's consultation process, the costs associated with the proposed required process would include only costs of the additional provisions of the proposed rule. The required process will be modeled on the experience and knowledge gained from the current consultation process, but there will be a number of new provisions that will have costs for notifiers. First, the rule would require a narrative explaining how the notifier concluded the bioengineered food is as safe as comparable food and that the food is in compliance with the act. Second, notifiers who inform FDA about a bioengineered food that contains a gene that encodes resistance to an antibiotic must specifically discuss the issues associated with the use of that gene. Although this provision was not in the 1992 policy or the 1996 procedures, in 1998 FDA released draft guidance for public comment. Since 1998, most notifiers who are in this situation have included this discussion in their submissions; in addition, many plant varieties are being developed without genes that encode resistance to an antibiotic. Therefore, FDA is considering that the requirement to discuss genes that encode resistance to an antibiotic be a cost of the proposed rule for only one submission per year (that is, FDA is estimating that only one relevant submission would have omitted this discussion without the rule). Third, notifiers must submit a written justification of their choice of foods that are comparable to the bioengineered food and the historic uses of these comparable foods. Fourth, if the bioengineered food is unsuitable for any applications or uses, notifiers must submit a description of these applications or uses. Because inappropriate uses are seldom an issue, FDA is considering that this issue would arise approximately once every 3 years. Fifth, if the submission includes confidential information, notifiers must submit redacted copies. Because very few submissions under the current process have included confidential information, FDA is considering that approximately one or two copies per year will contain confidential materials. Sixth, notifiers must ordinarily would submit an electronic copy suitable for making the PBN available in an electronic reading room, but could request a waiver if they have access to the technology that would be needed to prepare the copy.

FDA contacted five firms that had made one or more submissions under the 1996 procedures. FDA asked each of these firms for an estimate of the hourly cost associated with preparing a submission under the current process. Three of these firms subsequently provided the requested information. One firm estimated an average cost of $125 per hour; another firm estimated an average cost of $48 per hour; a third firm estimated an average cost of $60 per hour. Based on this information, FDA is estimating that the average cost to prepare a submission under the 1996 procedures is approximately $78 per hour.

The agency estimated the cost of a notice as the time needed multiplied by $78, the average cost associated with the person responsible for preparing a notice. Since 1994, FDA has received approximately eight submissions per year, but the agency expects this number of submissions to increase because of the increasing use of the technology. Because most firms who have consulted with FDA under the current process are large firms who likely would have access to the technology that would be needed to prepare an electronic disclosure copy, in this analysis FDA is estimating that no firms would request a waiver from the proposed requirement to submit such a copy. Therefore, total costs for these additional provisions are expected to be between $16,604 and $67,444 per year.

TABLE 3.

	Number of submissions per year	Time costs per submission (hours)	Cost per submission	Total annual cost
Narrative	8 to 20	8 to 16	$624 to $,1248	$4992 to $24960
Antibiotic resistance	1 to 2	8 to 16	$624 to $1248	$624 to $2496
Comparable foods	8 to 20	8 to 16	$624 to $1248	$4992 to $24960
Unsuitable uses	1/3	8 to 16	$624 to $1248	$208 to $416
Electronic disclosure copy	8 to 20	8.4	$655	$5242 to $13104
Redacted paper copy	1 to 2	7	$546	$546 to $1092

For developers who would not have chosen to notify FDA, the cost of the proposed rule would be higher. Regardless of whether they choose to consult with FDA, food producers are statutorily prohibited from marketing misbranded or adulterated foods. To ensure that the new food is not adulterated or misbranded, the developer must generate similar information to what would be required under the proposed notification requirement. Therefore, for these developers, the cost of the proposed notification requirement would be the submission of paperwork documenting the generation of the needed information, not the information itself. FDA's estimate of the time required to prepare a notice is discussed previously (section XII of this document). According to that analysis, the average submission would require 255.5 hours of preparation. Additionally, maintaining records of the notice would require 19 hours by the firm. At an average hourly cost of $78, the total cost of preparation and recordkeeping for a submission would be $21,411 (hourly cost x 274.5 hours).

As discussed above, FDA has requested comment on whether this rule should also include a requirement that a premarket notice for a bioengineered food include methods by which the food could be detected. As part of its analysis of impacts, FDA requests comments on the technical feasibility and if feasible, the costs of requiring such methods in a PBN. In particular, FDA requests comments on the feasibility and costs of requiring methods of detection in all circumstances and in a limited set of circumstances, such as foods whose use is restricted in some way. FDA also requests comments on the costs of supplying methods for detection of the bioengineered food in crops and in finished food products.

C. Regulatory Flexibility Act

FDA has examined the economic implications of this proposed rule as required by the Regulatory Flexibility Act (5 U.S.C. 601–612). If a rule has a significant economic impact on a substantial number of small entities, the Regulatory Flexibility Act requires agencies to analyze regulatory options that would lessen the economic effect of the rule on small entities.

Businesses in Agricultural Services are considered small if they have fewer than 500 employees, and in Commercial Physical and Biological Research (SIC 8731) if they have less than $5 million in annual receipts. Companies engaged in the development of bioengineered food may fit into either of these categories. Since 1994, more than 45 biotechnology submissions have been completely evaluated by FDA; these submissions were made by 11 distinct companies and 3 universities. Most of these companies are multinationals with hundreds of millions of dollars in annual sales and do not meet the criteria for a small entity. However, at least one of the companies that has notified FDA would meet the small entity definitions.

For firms that would not have notified FDA, the cost may be $21,411. FDA finds that this proposed rule would have a significant economic impact on a substantial number of small entities.

FDA considered a number of options to ease the burden on small businesses. Extra flexibility for small businesses meeting with FDA was considered. However, the proposed rule as written already includes flexibility for meeting with FDA, allowing phone meetings in lieu of meeting in person. Additional guidance was another option considered. However, the recommended presubmission consultation provides an opportunity for small businesses to get guidance from FDA about regulatory and safety concerns and how they can be dealt with by a small business. Thus, FDA has tentatively determined there is adequate flexibility written into the rule to accommodate the special needs of small businesses.

D. Unfunded Mandates Reform Act

Section 202(a) of the Unfunded Mandates Reform Act of 1995 (Public Law 104–4) requires that agencies prepare a written statement of anticipated costs and benefits before proposing any rule that may result in an expenditure by State, local, and tribal governments, in the aggregate, or by the private sector, of $100 million in any one year (adjusted annually for inflation). FDA has tentatively determined that this proposed rule is not a significant action as defined in the Unfunded Mandates Reform Act and will not have an effect on the economy that exceeds $100 million adjusted for inflation in any one year. The correct inflation-adjusted statutory threshold is $107 million.

XIV. Effective Date

FDA proposes that any final rule that may issue based on this proposal become effective 60 days after the date of publication of the final rule in the **Federal Register**.

XV. Environmental Impact

The agency has determined under 21 CFR 25.30(h) that this action is of a type that does not individually or cumulatively have a significant effect on the human environment. Therefore, neither an environment assessment nor an environmental impact statement is required.

XVI. Comments

Interested persons may submit to the Dockets Management Branch (HFA–305), Food and Drug Administration, 5630 Fishers Lane, rm. 1061, Rockville, MD 20852, written comments regarding this proposal by April 3, 2001. Submit written comments on the information collection provisions by February 20, 2001. Two copies of any comments are to be submitted, except that individuals may submit one copy. Comments are to be identified with the docket number found in brackets in the heading of this document. Received comments may be seen in the Dockets Management Branch between 9 a.m. and 4 p.m., Monday through Friday.

XVII. References

The following references have been placed on display in the Dockets Management Branch (address above) and may be seen by interested persons between 9 a.m. and 4 p.m., Monday through Friday.

1. Transcript of the Meeting of FDA's Food Advisory Committee, Herndon, VA, April 6, 7, and 8, 1994.

2. Transcript of the Joint Meeting of FDA's Food Advisory Committee and Veterinary Medicine Advisory Committee, November 2 and 3, 1994.

3. Table of Contents, ''Toxicological Principles for the Safety Assessment of Direct Food Additives and Color Additives Used in Food'' (Also known as ''Redbook I''), FDA, Bureau of Foods (Now CFSAN), 1982. May be Purchased From: National Technical Information Services (NTIS), 5285 Port Royal Rd., Springfield, VA 22161, 703–487–4650, NTIS Order Number PB83–170696.

4. Table of Contents, ''Toxicological Principles for the Safety of Food Ingredients; Redbook 2000,'' available at http://vm.cfsan.fda.gov.

5. ''Guidance on Consultation Procedures: Foods Derived From New Plant Varieties,'' available at http://vm.cfsan.fda.gov.

6. ''Foods Derived From New Plant Varieties Derived Through Recombinant DNA Technology; Final Consultations Under FDA's 1992 Policy,'' available at http://vm.cfsan.fda.gov.

7. Press Release, U.S. Department of Health and Human Services, ''FDA to Strengthen Pre-market Review of Bioengineered Foods,'' May 3, 2000, available at http://vm.cfsan.fda.gov.

8. Transcripts from Public Meetings Held on November 18, 1999, Chicago, IL, November 30, 1999, Washington, DC, and December 13, 1999, Oakland, CA; at http://www.fda.gov.

9. Nordlee, J. A. et al., ''High Methionine Brazil Nut Protein Binds Human IgE,'' *Journal of Allergy and Clinical Immunology*, vol. 93, number 1, part 2, p. 209, 1994.

10. Nordlee, J. A. et al., ''Identification of Brazil-Nut Allergen in Transgenic Soybeans,'' *New England Journal of Medicine*, vol. 334, pp.688–728, 1996.

11. Ye, X. et al., ''Engineering the Provitamin A (Beta-Carotene) Biosynthetic Pathway into (Carotenoid-Free) Rice Endosperm,'' *Science* vol. 287: pp. 303–05, 2000.

12. Kubo, Tomoaki, ''Potential of Foods From Which Unfavorable Component Have Been Removed,'' Topic 10, Joint FAO/WHO Expert Consultation on Foods Derived from Biotechnology, Biotech 00/12, 29 May-2 June 2000, available at www.who.int/fsf/GMfood/consultation) May2000/biotech) 00) 12.pdf.

13. Agriculture Biotechnology: Permitting, Notification, and Deregulations, U.S. Department of Agriculture, Animal Plant Health and Inspection Service, available at http://www.aphis.usda.gov.

14. Genetically Modified Pest-Protected Plants: Science and Regulation. Committee on Genetically Modified Pest-Protected Plants, Board on Agriculture and Natural Resources, National Research Council, National Academy Press, Washington, DC 20055, available at http://www.nap.edu/.

15. ''Guidance for Industry: Use of Antibiotic Resistance Marker Genes in Transgenic Plants,'' available at http://vm.cfsan.fda.gov.

16. ''Report on Consultations Regarding Use of Antibiotic Resistance Marker Genes in Transgenic Plants,'' available at http://vm.cfsan.fda.gov.

17. Transcript of ''Conference on Scientific Issues Related to Potential Allergenicity in Transgenic Food Crops,'' Annapolis, MD, April 18 and 19, 1994, Document TR–1, summary available at http://vm.cfsan.fda.gov.

18. Inventory of GRAS Notices, available at http://vm.cfsan.fda.gov.

List of Subjects

21 CFR Part 192

Administrative practice and procedure, Food additives, Food labeling, Foods, Reporting and recordkeeping requirements.

21 CFR Part 592

Administrative practice and procedure, Animal feeds, Animal foods, Food additives, Food labeling, Reporting and recordkeeping requirements.

Therefore, under the Federal Food, Drug, and Cosmetic Act and under authority delegated to the Commissioner of Food and Drugs, it is proposed that Title 21 CFR, Chapter I be amended as follows:

1. Add part 192 to read as follows:

PART 192—PREMARKET NOTICE CONCERNING BIOENGINEERED FOOD

Sec.
192.1 Definitions: What terms do I need to know?
192.5 Requirement for premarket biotechnology notice.
192.10 Recommendation for presubmission consultation.
192.20 Premarket biotechnology notice: Administrative information.
192.25 Premarket biotechnology notice—required parts: What must I include in a premarket biotechnology notice?
192.30 FDA evaluation and response: What will I get back from FDA and how long will it take?
192.40 Public disclosure.

Authority: 21 U.S.C. 331, 342, 343, 348, 371.

PART 192—PREMARKET NOTICE CONCERNING BIOENGINEERED FOOD

§ 192.1 Definitions: What terms do I need to know?

(a) A *bioengineered food* means food derived from a plant that is developed using a transformation event.

(b) *Commercial distribution* means introduction, or delivery for introduction, into interstate commerce for sale or exchange for consumption in any form by humans or other animals.

(c) A *notifier* is the person who submits a premarket biotechnology notice under this part. Any person who is responsible for the development, distribution, importation, or sale of a bioengineered food may be a notifier.

(d) A *premarket biotechnology notice* (PBN) is a submission to FDA regarding a bioengineered food that is intended to enter commercial distribution. Under this part, a PBN includes all data and information in the original submission and in any amendments to the original submission.

(e) *Transformation event* means the introduction into an organism of genetic material that has been manipulated in vitro. For the purpose of this part, ''organism'' refers to plants.

§ 192.5 Requirement for premarket biotechnology notice.

(a) *What foods must I notify FDA about*? You must notify FDA about any bioengineered food, including a bioengineered food derived from a new plant variety modified to contain a pesticidal substance, that will enter commercial distribution unless all of the following conditions are satisfied:

(1) The bioengineered food derives from a plant line that represents a transformation event that has been addressed in a PBN previously submitted to FDA;

(2) The use or application of the bioengineered food has been addressed in a notice previously submitted to FDA; and

(3) A letter from FDA demonstrates that FDA has evaluated the use or application of the bioengineered food and has no questions about it. This would include a letter issued between May 1, 1994, and the effective date of this rule.

(b) *Must the data or other information that I submit to support my PBN be generated from a particular plant line*? The data or other information that you submit to FDA regarding a bioengineered food must be generated from a plant line whose derivation can be traced to the transformation event that is the subject of the notice and that contains the genetic material introduced via the transformation event.

(c) *When do I submit my PBN*? You must submit your PBN at least 120 days before the bioengineered food is marketed.

§ 192.10 Recommendation for presubmission consultation.

(a) *Is there a program that provides an opportunity for me to consult with FDA about a bioengineered food before I submit a PBN*? FDA has established a presubmission consultation program to enable a prospective notifier to identify and discuss relevant safety, nutritional, or other issues regarding a bioengineered food before submitting a PBN about that food. FDA recommends that you participate in this program.

(b) *How does the presubmission consultation program work*? In this program, you inform FDA about the bioengineered food. FDA encourages you to discuss with us safety, nutritional, or other issues that may be associated with the bioengineered food. FDA will establish an administrative file for your consultation. Although FDA may provide written feedback during the consultation, that feedback would not release you from the requirement in § 192.5 to notify FDA about the bioengineered food as described in §§ 192.20 and 192.25.

(c) *Would the fact that I am consulting with FDA be confidential*? (1) In most cases, the fact that you are consulting with FDA would not be confidential.

(2) If you claim that the fact that you are consulting with FDA is confidential, FDA will evaluate your claim. If FDA is asked, under the Freedom of Information Act (FOIA), about whether you are consulting with us, FDA will disclose that fact unless we determine that your claim demonstrates that the criteria for exemption from disclosure in § 20.61 of this chapter are satisfied.

(d) *Would any of the data or other information in the administrative file of my consultation be disclosed to the public*? (1) If the fact that you are consulting with FDA is not confidential, then the data or other information in the administrative file of your presubmission consultation would be available for public disclosure in accordance with § 20.61 of this chapter.

(2) As long as the fact that you are consulting with FDA is confidential, then the data or other information in the administrative file of your presubmission consultation would not be available for public disclosure.

(e) *How do I get started*? To participate in the presubmission consultation program, write to FDA and tell us that you want to consult about a bioengineered food.

(f) *If I participate, what do I provide to FDA*? (1) You must state your view as to whether the fact that you are consulting with FDA, or any or all of the data or other information that you submit to FDA, is exempt from disclosure under the FOIA (i.e., is confidential).

(2) If you claim that the fact that you are consulting with FDA, or that any or all of the data or other information that you submit to FDA is confidential, you must explain the basis for your claim.

(3) We recommend that you send us the following synopsis about the requested consultation:

(i) Your name and address;

(ii) The name of the bioengineered food that is the subject of the presubmission consultation and the plant species from which it is derived;

(iii) The distinctive designation(s) that you use to identify the applicable transformation event(s);

(iv) A list of the identity(ies) and source(s) of introduced genetic material;

(v) A description of the purpose or intended technical effect of the transformation event. This includes expected significant changes in the composition or characteristic properties of food derived from the plant as a result of the transformation event, regardless of whether these changes result from the insertion of new genes or from a modification in the expression of endogenous genes;

(vi) A description of the intended applications or uses of the bioengineered food; and

(vii) A description of any applications or uses that are not suitable for the bioengineered food.

(g) *Where do I send my written request for consultation*? Send your written request for consultation about a bioengineered food to the Office of Premarket Approval (HFS–200), Center for Food Safety and Applied Nutrition, 200 C St. SW., Washington, DC 20204. As necessary and appropriate, the Center for Food Safety and Applied Nutrition (CFSAN) will coordinate FDA's evaluation of your request with the Office of Surveillance and Compliance, Center for Veterinary Medicine (CVM).

(h) *What copies do I send*? (1) You should send an original and at least two paper copies of your written request for consultation.

(2) If you submit additional written information to FDA (i.e., after your original written request), you should send an original and at least two paper copies of each additional submission.

(3) If you claim that any specific data or other information that you provide to FDA during the consultation are confidential, you should:

(i) Clearly identify, in each submission, the data or other information that you claim are confidential;

(ii) Prepare and submit a ''redacted'' paper copy of the submission (i.e., a copy that does not contain any of those data or information).

(iii) Prepare this redacted paper copy in a manner that clearly identifies the location and relative size of deleted information.

(i) *What will FDA do with my written request for consultation*? (1) FDA will establish an administrative file for your consultation and will place the following materials in that file:

(i) Any correspondence between you and FDA;

(ii) Any written materials that you provide during the consultation process; and

(iii) A memorandum of each meeting or significant phone call that you have with FDA regarding the subject of your consultation.

(2) If you ask FDA to discuss the bioengineered food with you, we will do so (e.g., at a meeting at its offices or via a telephone conference).

§ 192.20 Premarket biotechnology notice: Administrative information.

(a) *Where do I send my PBN*? Send a PBN regarding a bioengineered food to the Office of Premarket Approval (HFS–200), Center for Food Safety and Applied Nutrition, Food and Drug Administration, 200 C St. SW., Washington, DC 20204. As necessary and appropriate, the Center for Food Safety and Applied Nutrition (CFSAN) will coordinate FDA's evaluation of your PBN with the Office of Surveillance and Compliance, Center for Veterinary Medicine (CVM).

(b) *What paper copies do I send*? (1) At a minimum, you must submit an original paper version and one paper copy of a PBN (including any amendments that you make to your PBN). The original paper version will be the official version at FDA. If, under paragraph (c)(1) of this section, you choose not to send an electronic evaluation copy of your PBN, then you must submit one additional paper copy, for a total of three paper copies.

(2) If you claim that specific data or other information in the PBN are confidential, you must:

(i) Clearly identify, in each submission, the data or information that you claim are confidential;

(ii) Prepare and submit a ''redacted'' paper copy of the PBN (i.e., a copy that does not contain any of those data or information); and

(iii) Prepare this redacted paper copy in a manner that clearly identifies the location and relative size of deleted information.

(c) *What electronic copies do I send*? (1) *Evaluation copy*. FDA recommends that you submit an electronic copy that is formatted in a manner that makes it suitable for FDA to use while evaluating your PBN. If you do so, you should submit such an electronic copy of your original PBN and of any amendments that you make to your PBN. To obtain current information about the technical format of this evaluation copy, contact the Office of Premarket Approval (OPA)

at the address listed previously or look on OPA's home page on the Internet.

(2) *Disclosure copy*. (i) Unless waived under paragraph (c)(2)(ii) of this section, you must submit an electronic copy that is formatted in a manner that makes it suitable for FDA to use to make your PBN available to the public in an electronic reading room. This includes an electronic copy of your original PBN and of any amendments that you make to your PBN. If you claim that specific data or other information in the PBN are confidential, you must remove such data or information from the disclosure copy in a manner that clearly identifies the location and relative size of deleted information. To obtain current information about the technical format of this disclosure copy, write to OPA at the address listed previously or look on OPA's home page on the Internet.

(ii) You may request that FDA waive the requirement for an electronic disclosure copy, e.g., if you do not have access to the appropriate technology for formatting such a copy. FDA will grant or deny your request according to its merits.

(d) *May I submit any data or other information, such as a reprint of a published scientific article, in a foreign language*? If you submit any material in a foreign language, you must provide an English translation that is verified to be complete and accurate.

(e) *May I incorporate data or other information that are already retained in FDA's files by referring to them*? (1) If you previously submitted a file to FDA, you may incorporate that file by referring FDA to it.

(2) If someone else previously submitted a file to FDA, the procedure that you may use to incorporate that file into your PBN depends on whether the file is publicly available (e.g., the file is in an electronic reading room or is otherwise available under FOIA).

(i) If the file is publicly available, you may incorporate that file by referring FDA to it.

(ii) If the file is not publicly available, you may incorporate that file by referring FDA to it if the person who submitted the file authorizes you to do so in a signed statement and you include that signed statement in your PBN.

(f) *How can I get additional information that will help me to prepare a PBN*? You can obtain current guidance regarding specific technical issues by writing to OPA at the address listed previously or by looking on OPA's home page on the Internet.

(g) *May I withdraw a PBN from FDA consideration after I send it*? (1) At any time during FDA's evaluation of a PBN, you may request that FDA cease to evaluate it. Your request would not preclude you from submitting a future PBN about the same bioengineered food.

(2) If you request that FDA cease to evaluate your PBN, FDA will retain your PBN in its files and classify your PBN as ''withdrawn.''

§ 192.25 Premarket biotechnology notice—required parts: What must I include in a premarket biotechnology notice?

A PBN has seven parts. You must include all of the information described in each part, or explain why it does not apply to the bioengineered food.

(a) *Part I*. In your PBN, you must provide a letter that a responsible official of your organization, or your attorney or agent, dates and signs. In this letter, you inform FDA that you are submitting a PBN under § 192.25, state your position or title, and attest to the following:

(1) It is your view that:

(i) The bioengineered food is as safe as comparable food; and

(ii) The intended use of the bioengineered food is in compliance with all applicable requirements of the Federal Food, Drug, and Cosmetic Act (the act).

(2) You agree to make relevant data or other information that are not included in your PBN available to FDA upon request, either while FDA is evaluating your PBN or for cause.

(3) You agree to two procedures for making relevant data or other information that are not included in your PBN available to FDA by:

(i) Allowing FDA to review and copy these data or information at a specified address during customary business hours; or

(ii) Sending a copy of these data or information to FDA.

(4)(i) Your view as to whether the existence of your PBN, or any or all of the data or other information in your PBN, is exempt from disclosure under the FOIA (i.e., is confidential); and

(ii) If you claim that the existence of the PBN, or any or all of the data or other information in the PBN, is confidential, you must explain the basis for your claim.

(5) To the best of your knowledge, the PBN is a representative and balanced submission that includes information, unfavorable as well as favorable, pertinent to the evaluation of the safety, nutritional, or other regulatory issues that may be associated with the bioengineered food.

(b) *Part II*. In your PBN, you must provide the following synopsis:

(1) *Section 1*. Your name and address;

(2) *Section 2*. The name of the bioengineered food that is the subject of the PBN and the plant species from which it is derived;

(3) *Section 3*. The distinctive designation(s) that you use to identify the applicable transformation event(s);

(4) *Section 4*. A list of the identity(ies) and source(s) of introduced genetic material;

(5) *Section 5*. A description of the purpose or intended technical effect of the transformation event. This includes expected significant changes in the composition or characteristic properties of food derived from the plant as a result of the transformation event, regardless of whether these changes result from the insertion of new genes or from a modification in the expression of endogenous genes;

(6) *Section 6*. A description of the applications or uses of the bioengineered food; and

(7) *Section 7*. A description of any applications or uses that are not suitable for the bioengineered food.

(c) *Part III*. In your PBN, you must describe the status of the bioengineered food at other Federal agencies and foreign governments.

(1) *Status at the U.S. Department of Agriculture, Animal and Plant Health Inspection Service (APHIS)*. A statement as to whether the bioengineered food plant has been the subject of an initiated or completed authorization, or petition for nonregulated status by APHIS, under 7 CFR 340.

(2) *Status at the U.S. Environmental Protection Agency (EPA)*. A statement as to whether any plant pesticide residue in the bioengineered food is or has been the subject of a consultation with, or review by, EPA and, if so, a description of the status of that consultation or review.

(3) *Status at foreign governments*. A statement as to whether the bioengineered food is or has been the subject of review by any foreign government and, if so, a description of the status of that consultation or review.

(d) *Part IV*. In your PBN, you must provide the following data or other information about the method of development of the food:

(1) *Section 1*. Characterization of the parent plant including scientific name, taxonomic classification, mode of reproduction, and pertinent history of development.

(2) *Section 2*. Construction of the vector used in the transformation of the parent plant. This includes a thorough characterization of the genetic material intended for introduction into the parent plant and a discussion of the transformation method, open reading frames, and regulatory sequences.

(3) *Section 3*. Characterization of the introduced genetic material, including the number of insertion sites, the number of gene copies inserted at each site, information on deoxyribonucleic acid (DNA) organization within the inserts, and information on potential reading frames that could express unintended proteins in the transformed plant.

(4) *Section 4*. Data or other information related to the inheritance and genetic stability of the introduced genetic material.

(5) *Section 5*. A discussion, as necessary, of other relevant data or other information about the method of development.

(e) *Part V*. In your PBN, you must discuss any newly inserted genes that encode resistance to an antibiotic. FDA recommends that you contact FDA about the agency's current thinking on this topic.

(f) *Part VI*. In your PBN, you must provide the following data or other information about substances (other than DNA, ribonucleic acid (RNA), or pesticidal substances) introduced into, or modified in, the food (including substances that you expect to be present in the bioengineered food at an increased level relative to comparable food):

(1) *Section 1*. Data or other information about the identity and function of substances introduced into, or modified in, the food;

(2) *Section 2*. Data or other information relating to the level in the bioengineered food of substances introduced into, or modified in, the food;

(3) *Section 3*. (i) An estimate of dietary exposure to substances introduced into, or modified in, the food; or

(ii) A statement that explains the basis for your conclusion that an estimate of dietary exposure to these substances is not needed to support your view that the bioengineered food is as safe as comparable food.

(4) *Section 4*. A discussion of the available data or other information that address the potential that a protein introduced into the food will be an allergen. FDA recommends that you contact FDA about the agency's current thinking on this topic.

(5) *Section 5*. A discussion of data or other information relevant to other safety issues that may be associated with the substances introduced into, or modified in, the food.

(g) *Part VII*. In your PBN, you must provide the following data or other information about the food:

(1) *Section 1*. Justification for selecting a particular food(s) as the comparable food to which you will compare the bioengineered food.

(2) *Section 2*. A discussion of historic uses of the comparable food(s) to which you will compare the bioengineered food.

(3) *Section 3*. Data or other information comparing the composition and characteristics of the bioengineered food to those of comparable food(s), with emphasis on:

(i) Levels of significant nutrients;

(ii) Levels of naturally occurring toxicants and antinutrients; and

(iii) Any intended changes to the composition of the food.

(4) *Section 4*. Any other information relevant to the safety, nutrition, or other assessment of the bioengineered food.

(5) *Section 5*. A narrative that explains the basis for your view that the bioengineered food is as safe as comparable food and that the bioengineered food is otherwise in compliance with all applicable requirements of the act.

§ 192.30 FDA evaluation and response: What will I get back from FDA and how long will it take?

(a) Within 15 working days of receipt, FDA will do an initial evaluation of your PBN to determine whether it appears to include all elements required under §§ 192.20 and 192.25.

(1) If your PBN appears to include all required elements, the Center for Food Safety and Applied Nutrition (CFSAN) will file it and will inform the Center for Veterinary Medicine (CVM) of the filing.

(2) If your PBN does not appear to include all required elements, FDA will inform you of that fact and explain what is missing.

(b) Within 15 working days of filing a notice, FDA will send you (or your agent) a letter that informs you of the date on which FDA filed the PBN.

(c) Within 120 days of filing a notice, FDA will send you (or your agent) a letter about its evaluation of your premarket notice.

(d) In general, FDA will respond as follows:

(1) FDA is extending its evaluation of your premarket notice by 120 days and expects that the bioengineered food will not be marketed during that evaluation; or

(2) FDA has completed its evaluation of your premarket notice. Based upon this evaluation, and as discussed in this letter, the premarket notice does not provide a basis for your view that the bioengineered food is as safe as comparable food or is otherwise in compliance with all applicable requirements of the act. Therefore, the agency expects that the bioengineered food will not be marketed; or

(3) FDA has completed its evaluation of your premarket notice. Based upon this evaluation, the agency has no questions, at this time, regarding your view that the bioengineered food is as safe as comparable food and is otherwise in compliance with all applicable requirements of the act; or

(4) FDA has received a letter in which you withdrew your PBN from its consideration without prejudice to a future filing. Given your letter, FDA ceased to evaluate your PBN on the date that we received your letter.

(e) If your PBN is about a bioengineered food that contains a plant pesticide, FDA will describe the status of the bioengineered food at EPA.

(1) If all applicable regulatory processes at EPA have come to closure, FDA will say so and will respond as described in paragraph (d) of this section.

(2) If regulatory processes at EPA regarding the bioengineered food are still pending, FDA will inform you that FDA does not consider your PBN to satisfy the requirement for premarket notice.

§ 192.40 Public disclosure.

(a) *When could anyone else find out that I sent a PBN to FDA*? (1) Ordinarily, the existence of your PBN is available for public disclosure on the date that FDA files it.

(2) If you believe that the existence of your PBN is confidential, it is your responsibility to say so. The way to do this is by making a claim for confidentiality in the letter that you send in Part I of your PBN (§ 192.25(a)(4)).

(3) If you claim that the existence of your PBN is confidential, FDA will evaluate your claim. FDA will disclose the existence of your PBN, unless FDA determines that your claim demonstrates that the criteria for exemption from disclosure in § 20.61 of this chapter are satisfied.

(4) If FDA determines that the existence of your PBN is confidential at the time that we file it, the existence of your PBN will become available for public disclosure, in accordance with § 20.61 of this chapter, when the criteria for exemption from disclosure in § 20.61 of this chapter are no longer satisfied.

(b) *How could anyone else find out that I sent a PBN to FDA*? (1) FDA will make a list of filed PBN's easily accessible to the public (e.g., by placing the information on the Internet or in a paper or electronic file that is available at FDA for public review and copying).

(2) In general, FDA will use the information submitted in Part II of each PBN (i.e., the information described in § 192.25(b) of this part) to prepare this list and will update this list on an approximately monthly basis.

(c) *Would the data or other information in my PBN (including an amendment to my PBN, or any data or information that I incorporate by reference) be available to the public*? (1) Ordinarily, the data or other information in your PBN are available for public disclosure, in accordance with § 20.61 of this chapter, as of the date that FDA files the PBN.

(2) If you believe that any or all of the data or other information in your PBN is confidential, it is your responsibility to say so. The way to do this is in the letter that you send in Part I of your PBN (§ 192.25(a)(4)). In addition, under § 192.20(b) and (c), it is your responsibility to provide copies of your PBN that do not contain any data or other information that you claim are confidential.

(3) If you claim that any or all of the data or other information in your PBN is confidential, FDA will evaluate your claim. FDA will disclose the data or information in your PBN unless FDA determines that your claim demonstrates that the criteria for exemption from disclosure in § 20.61 of this chapter are satisfied.

(4) If FDA determines that any or all of the data or other information in your PBN is confidential as of the date that we file it, those data or information would be available for public disclosure, in accordance with § 20.61 of this chapter, when the criteria for exemption from disclosure in § 20.61 of this chapter are no longer satisfied.

(5) As long as the existence of your PBN is confidential, then the data or other information in your PBN would not be available for public disclosure.

(d) *How could the public obtain disclosable data and information in my PBN*? Under the FOIA, the public could obtain the disclosable data or other information in your PBN or an amendment to your PBN, or that you incorporate by reference into your PBN, by looking for these data and information in FDA's electronic reading room or by asking FDA to send them a copy of these data and information.

(e) *Would the agency's evaluation of my PBN be available to the public*? FDA will make the following information easily accessible to the public (e.g., by placing the information on the Internet or in a paper or electronic file that is available at FDA for public review and copying):

(1) The text of any letter issued by the agency under § 192.30(c).

(2) The text of the agency's completed evaluation of any notice submitted under this part.

2. Add part 592 to read as follows:

PART 592—PREMARKET NOTICE CONCERNING BIOENGINEERED FOOD

Sec.

592.1 Definitions: What terms do I need to know?
592.5 Requirement for premarket biotechnology notice.
592.10 Recommendation for presubmission consultation.
592.20 Premarket biotechnology notice: Administrative information.
592.25 Premarket biotechnology notice–required parts: What must I include in a premarket biotechnology notice?
592.30 FDA evaluation and response: What will I get back from FDA and how long will it take?
592.40 Public disclosure.

Authority: 21 U.S.C. 331, 341, 343, 348, 371.

§ 592.1 Definitions: What terms do I need to know?

(a) *A bioengineered food* means food derived from a plant that is developed using a transformation event.

(b) *Commercial distribution* means introduction, or delivery for introduction, into interstate commerce for sale or exchange for consumption in any form by humans or other animals.

(c) A *notifier* is the person who submits a premarket biotechnology notice under this part. Any person who is responsible for the development, distribution, importation, or sale of a bioengineered food may be a notifier.

(d) *A premarket biotechnology notice* (PBN) is a submission to FDA regarding a bioengineered food that is intended to enter commercial distribution. Under this part, a PBN includes all data and information in the original submission and in any amendments to the original submission.

(e) *Transformation event* means the introduction into an organism of genetic material that has been manipulated in vitro. For the purpose of this part, ''organism'' refers to plants.

§ 592.5 Requirement for premarket biotechnology notice.

(a) *What foods must I notify FDA about*? You must notify FDA about any bioengineered food, including a bioengineered food derived from a new plant variety modified to contain a pesticidal substance, that will enter commercial distribution unless all of the following conditions are satisfied:

(1) The bioengineered food derives from a plant line that represents a transformation event that has been addressed in a PBN previously submitted to FDA;

(2) The use or application of the bioengineered food has been addressed in a notice previously submitted to FDA; and

(3) A letter from FDA demonstrates that FDA has evaluated the use or application of the bioengineered food and has no questions about it. This would include a letter issued between May 1, 1994, and the effective date of this rule.

(b) *Must the data or other information that I submit to support my PBN be generated from a particular plant line*? The data or other information that you submit to FDA regarding a bioengineered food must be generated from a plant line whose derivation can be traced to the transformation event that is the subject of the notice and that contains the genetic material introduced via the transformation event.

(c) *When do I submit my PBN*? You must submit your PBN at least 120 days before the bioengineered food is marketed.

§ 592.10 Recommendation for presubmission consultation.

(a) *Is there a program that provides an opportunity for me to consult with FDA about a bioengineered food before I submit a PBN*? FDA has established a presubmission consultation program to enable a prospective notifier to identify and discuss relevant safety, nutritional, or other issues regarding a bioengineered food before submitting a PBN about that food. FDA recommends that you participate in this program.

(b) *How does the presubmission consultation program work*? In this program, you inform FDA about the bioengineered food. FDA encourages you to discuss with us safety, nutritional, or other issues that may be associated with the bioengineered food. FDA will establish an administrative file for your consultation. Although FDA may provide written feedback during the consultation, that feedback would not release you from the requirement in § 592.5 to notify FDA about the bioengineered food as described in §§ 592.20 and 592.25.

(c) *Would the fact that I am consulting with FDA be confidential*? (1) In most cases, the fact that you are consulting with FDA would not be confidential.

(2) If you claim that the fact that you are consulting with FDA is confidential, FDA will evaluate your claim. If FDA is asked, under the Freedom of Information Act (FOIA), about whether you are consulting with us, FDA will

disclose that fact unless we determine that your claim demonstrates that the criteria for exemption from disclosure in § 20.61 of this chapter are satisfied.

(d) *Would any of the data or other information in the administrative file of my consultation be disclosed to the public*? (1) If the fact that you are consulting with FDA is not confidential, then the data or other information in the administrative file of your presubmission consultation would be available for public disclosure in accordance with § 20.61 of this chapter.

(2) As long as the fact that you are consulting with FDA is confidential, then the data or other information in the administrative file of your presubmission consultation would not be available for public disclosure.

(e) *How do I get started*? To participate in the presubmission consultation program, write to FDA and tell us that you want to consult about a bioengineered food.

(f) *If I participate, what do I provide to FDA*? (1) You must state your view as to whether the fact that you are consulting with FDA, or any or all of the data or other information that you submit to FDA, is exempt from disclosure under the FOIA (i.e., is confidential).

(2) If you claim that the fact that you are consulting with FDA, or that any or all of the data or other information that you submit to FDA, is confidential, you must explain the basis for your claim.

(3) We recommend that you send us the following synopsis about the requested consultation:

(i) Your name and address;

(ii) The name of the bioengineered food that is the subject of the presubmission consultation and the plant species from which it is derived;

(iii) The distinctive designation(s) that you use to identify the applicable transformation event(s);

(iv) A list of the identity(ies) and source(s) of introduced genetic material;

(v) A description of the purpose or intended technical effect of the transformation event. This includes expected significant changes in the composition or characteristic properties of food derived from the plant as a result of the transformation event, regardless of whether these changes result from the insertion of new genes or from a modification in the expression of endogenous genes;

(vi) A description of the intended applications or uses of the bioengineered food; and

(vii) A description of any applications or uses that are not suitable for the bioengineered food.

(g) *Where do I send my written request for consultation*? Send your written request for consultation about a bioengineered food to the Office of Premarket Approval (HFS-200), Center for Food Safety and Applied Nutrition, 200 C St. SW. Washington, DC 20204. As necessary and appropriate, the Center for Food Safety and Applied Nutrition (CFSAN) will coordinate FDA's evaluation of your request with the Office of Surveillance and Compliance, Center for Veterinary Medicine (CVM).

(h) *What copies do I send*? (1) You should send an original and at least two paper copies of your written request for consultation.

(2) If you submit additional written information to FDA (i.e., after your original written request), you should send an original and at least two paper copies of each additional submission.

(3) If you claim that any specific data or other information that you provide to FDA during the consultation are confidential, you should:

(i) Clearly identify, in each submission, the data or other information that you claim are confidential; and

(ii) Prepare and submit a ''redacted'' paper copy of the submission (i.e., a copy that does not contain any of those data or information).

(iii) Prepare this redacted paper copy in a manner that clearly identifies the location and relative size of deleted information.

(i) *What will FDA do with my written request for consultation*? (1) FDA will establish an administrative file for your consultation and will place the following materials in that file:

(i) Any correspondence between you and FDA;

(ii) Any written materials that you provide during the consultation process; and

(iii) A memorandum of each meeting or significant phone call that you have with FDA regarding the subject of your consultation.

(2) If you ask FDA to discuss the bioengineered food with you, we will do so (e.g., at a meeting at its offices or via a telephone conference).

§ 592.20 Premarket biotechnology notice: Administrative information.

(a) *Where do I send my PBN*? Send a PBN regarding a bioengineered food to the Office of Premarket Approval (HFS–200), Center for Food Safety and Applied Nutrition, Food and Drug Administration, 200 C St. SW., Washington, DC 20204. As necessary and appropriate, the Center for Food Safety and Applied Nutrition (CFSAN) will coordinate FDA's evaluation of your PBN with the Office of Surveillance and Compliance, Center for Veterinary Medicine (CVM).

(b) *What paper copies do I send*? (1) At a minimum, you must submit an original paper version and one paper copy of a PBN (including any amendments that you make to your PBN). The original paper version will be the official version at FDA. If, under paragraph (c)(1) of this section, you choose not to send an electronic evaluation copy of your PBN, then you must submit one additional paper copy, for a total of three paper copies.

(2) If you claim that specific data or other information in the PBN are confidential, you must:

(i) Clearly identify, in each submission, the data or information that you claim are confidential;

(ii) Prepare and submit a ''redacted'' paper copy of the PBN (i.e., a copy that does not contain any of those data or information); and

(iii) Prepare this redacted paper copy in a manner that clearly identifies the location and relative size of deleted information.

(c) *What electronic copies do I send*?

(1) *Evaluation copy*. FDA recommends that you submit an electronic copy that is formatted in a manner that makes it suitable for FDA to use while evaluating your PBN. If you do so, you should submit such an electronic copy of your original PBN and of any amendments that you make to your PBN. To obtain current information about the technical format of this evaluation copy, contact the Office of Premarket Approval (OPA) at the address listed previously or look on OPA's home page on the Internet.

(2) *Disclosure copy*.

(i) Unless waived under paragraph (2)(ii) of this section, you must submit an electronic copy that is formatted in a manner that makes it suitable for FDA to use to make your PBN available to the public in an electronic reading room. This includes an electronic copy of your original PBN and of any amendments that you make to your PBN. If you claim that specific data or other information in the PBN are confidential, you must remove such data or information from the disclosure copy in a manner that clearly identifies the location and relative size of deleted information. To obtain current information about the technical format of this disclosure copy, write to OPA at the address listed previously or look on OPA's home page on the Internet.

(ii) You may request that FDA waive the requirement for an electronic disclosure copy, e.g., if you do not have

access to the appropriate technology for formatting such a copy. FDA will grant or deny your request according to its merits.

(d) *May I submit any data or other information, such as a reprint of a published scientific article, in a foreign language*? If you submit any material in a foreign language, you must provide an English translation that is verified to be complete and accurate.

(e) *May I incorporate data or other information that are already retained in FDA's files by referring to them*? (1) If you previously submitted a file to FDA, you may incorporate that file by referring FDA to it.

(2) If someone else previously submitted a file to FDA, the procedure that you may use to incorporate that file into your PBN depends on whether the file is publicly available (e.g., the file is in an electronic reading room or is otherwise available under FOIA).

(i) If the file is publicly available, you may incorporate that file by referring FDA to it.

(ii) If the file is not publicly available, you may incorporate that file by referring FDA to it if the person who submitted the file authorizes you to do so in a signed statement and you include that signed statement in your PBN.

(f) *How can I get additional information that will help me to prepare a PBN*? You can obtain current guidance regarding specific technical issues by writing to OSC at the address listed previously or by looking on CVM's home page on the Internet.

(g) *May I withdraw a PBN from FDA consideration after I send it*? (1) At any time during FDA's evaluation of a PBN, you may request that FDA cease to evaluate it. Your request would not preclude you from submitting a future PBN about the same bioengineered food.

(2) If you request that FDA cease to evaluate your PBN, FDA will retain your PBN in its files and classify your PBN as ''withdrawn.''

§ 592.25 Premarket biotechnology notice–required parts: What must I include in a premarket biotechnology notice?

A PBN has seven parts. You must include all of the information described in each part, or explain why it does not apply to the bioengineered food.

(a) *Part I*. In your PBN, you must provide a letter that a responsible official of your organization, or your attorney or agent, dates and signs. In this letter, you inform FDA that you are submitting a PBN under § 192.25 and attest to the following:

(1) It is your view that:

(i) The bioengineered food is as safe as comparable food; and

(ii) The intended use of the bioengineered food is in compliance with all applicable requirements of the the Federal Food, Drug, and Cosmetic Act (the act).

(2) You agree to make relevant data or other information that are not included in your PBN available to FDA upon request, either while FDA is evaluating your PBN or for cause.

(3) You agree to two procedures for making relevant data or other information that are not included in your PBN available to FDA by:

(i) Allowing FDA to review and copy these data or information at specified address during customary business hours; or

(ii) Sending a copy of these data or information to FDA.

(4)(i) Your view as to whether the existence of your PBN, or any or all of the data or other information in your PBN, is exempt from disclosure under the FOIA (i.e., is confidential); and

(ii) If you claim that the existence of the PBN, or any or all of the data or other information in the PBN, is confidential, you must explain the basis for your claim.

(5) To the best of your knowledge, the PBN is a representative and balanced submission that includes information, unfavorable as well as favorable, pertinent to the evaluation of the safety, nutritional, or other regulatory issues that may be associated with the bioengineered food.

(b) *Part II*. In your PBN, you must provide the following synopsis:

(1) *Section 1*. Your name and address;

(2) *Section 2*. The name of the bioengineered food that is the subject of the PBN and the plant species from which it is derived;

(3) *Section 3*. The distinctive designation(s) that you use to identify the applicable transformation event(s);

(4) *Section 4*. A list of the identity(ies) and source(s) of introduced genetic material;

(5) *Section 5*. A description of the purpose or intended technical effect of the transformation event. This includes expected significant changes in the composition or characteristic properties of food derived from the plant as a result of the transformation event, regardless of whether these changes result from the insertion of new genes or from a modification in the expression of endogenous genes;

(6) *Section 6*. A description of the applications or uses of the bioengineered food; and

(7) *Section 7*. A description of any applications or uses that are not suitable for the bioengineered food.

(c) *Part III*. In your PBN, you must describe the status of the bioengineered food at other Federal agencies and foreign governments.

(1) *Status at the U.S. Department of Agriculture, Animal and Plant Health Inspection Service (APHIS)*. A statement as to whether the bioengineered food plant has been the subject of an initiated or completed authorization, or petition for nonregulated status by APHIS, under 7 CFR part 340.

(2) *Status at the U.S. Environmental Protection Agency (EPA)*. A statement as to whether any plant pesticide residue in the bioengineered food is or has been the subject of a consultation with, or review by, EPA and, if so, a description of the status of that consultation or review.

(3) *Status at foreign governments*. A statement as to whether the bioengineered food is or has been the subject of review by any foreign government and, if so, a description of the status of that consultation or review.

(d) *Part IV*. In your PBN, you must provide the following data or other information about the method of development of the food:

(1) *Section 1*. Characterization of the parent plant including scientific name, taxonomic classification, mode of reproduction, and pertinent history of development.

(2) *Section 2*. Construction of the vector used in the transformation of the parent plant. This includes a thorough characterization of the genetic material intended for introduction into the parent plant and a discussion of the transformation method, open reading frames, and regulatory sequences.

(3) *Section 3*. Characterization of the introduced genetic material, including the number of insertion sites, the number of gene copies inserted at each site, information on deoxyribonucleic acide (DNA) organization within the inserts, and information on potential reading frames that could express unintended proteins in the transformed plant.

(4) *Section 4*. Data or other information related to the inheritance and genetic stability of the introduced genetic material.

(5) *Section 5*. A discussion, as necessary, of other relevant data or other information about the method of development.

(e) *Part V*. In your PBN, you must discuss any newly inserted genes that encode resistance to an antibiotic. FDA recommends that you contact FDA about the agency's current thinking on this topic.

(f) *Part VI*. In your PBN, you must provide the following data or other information about substances (other than DNA, ribonucleic acid (RNA), or

pesticidal substances) introduced into, or modified in, the food (including substances that you expect to be present in the bioengineered food at an increased level relative to comparable food):

(1) *Section 1*. Data or other information about the identity and function of substances introduced into, or modified in, the food;

(2) *Section 2*. Data or other information relating to the level in the bioengineered food of substances introduced into, or modified in, the food;

(3) *Section 3*. (i) An estimate of dietary exposure to substances introduced into, or modified in, the food; or

(ii) A statement that explains the basis for your conclusion that an estimate of dietary exposure to these substances is not needed to support your view that the bioengineered food is as safe as comparable food.

(4) *Section 4*. A discussion of the available data or other information that address the potential that a protein introduced into the food will be an allergen. FDA recommends that you contact FDA about the agency's current thinking on this topic.

(5) *Section 5*. A discussion of data or other information relevant to other safety issues that may be associated with the substances introduced into, or modified in, the food.

(g) *Part VII*. In your PBN, you must provide the following data or other information about the food:

(1) *Section 1*. Justification for selecting a particular food(s) as the comparable food to which you will compare the bioengineered food.

(2) *Section 2*. A discussion of historic uses of the comparable food(s) to which you will compare the bioengineered food.

(3) *Section 3*. Data or other information comparing the composition and characteristics of the bioengineered food to those of comparable food(s), with emphasis on:

(i) Levels of significant nutrients;

(ii) Levels of naturally occurring toxicants and antinutrients; and

(iii) Any intended changes to the composition of the food.

(4) *Section 4*. Any other information relevant to the safety, nutrition, or other assessment of the bioengineered food.

(5) *Section 5*. A narrative that explains the basis for your view that the bioengineered food is as safe as comparable food and that the bioengineered food is otherwise in compliance with all applicable requirements of the act.

§ 592.30 FDA evaluation and response: What will I get back from FDA and how long will it take?

(a) Within 15 working days of receipt, FDA will do an initial evaluation of your PBN to determine whether it appears to include all elements required under §§ 592.20 and 592.25.

(1) If your PBN appears to include all required elements, the Center for Food Safety and Applied Nutrition (CFSAN) will file it and will inform the Center for Veterinary Medicine (CVM) of the filing.

(2) If your PBN does not appear to include all required elements, FDA will inform you of that fact and explain what is missing.

(b) Within 15 working days of filing a notice, FDA will send you (or your agent) a letter that informs you of the date on which FDA filed the PBN.

(c) Within 120 days of filing a notice, FDA will send you (or your agent) a letter about its evaluation of your premarket notice.

(d) In general, FDA will respond as follows:

(1) FDA is extending its evaluation of your premarket notice by 120 days and expects that the bioengineered food will not be marketed during that evaluation; or

(2) FDA has completed its evaluation of your premarket notice. Based upon this evaluation, and as discussed in this letter, the premarket notice does not provide a basis for your view that the bioengineered food is as safe as comparable food or is otherwise in compliance with all applicable requirements of the act. Therefore, the agency expects that the bioengineered food will not be marketed; or

(3) FDA has completed its evaluation of your premarket notice. Based upon this evaluation, the agency has no questions, at this time, regarding your view that the bioengineered food is as safe as comparable food and is otherwise in compliance with all applicable requirements of the act; or

(4) FDA has received a letter in which you withdrew your PBN from its consideration without prejudice to a future filing. Given your letter, FDA ceased to evaluate your PBN on the date that we received your letter.

(e) If your PBN is about a bioengineered food that contains a plant pesticide, FDA will describe the status of the bioengineered food at EPA.

(1) If all applicable regulatory processes at EPA have come to closure, FDA will say so and will respond as described in paragraph (d) of this section.

(2) If regulatory processes at EPA regarding the bioengineered food are still pending, FDA will inform you that FDA does not consider your PBN to satisfy the requirement for premarket notice.

§ 592.40 Public disclosure.

(a) *When could anyone else find out that I sent a PBN to FDA*? (1) Ordinarily, the existence of your PBN is available for public disclosure on the date that FDA files it.

(2) If you believe that the existence of your PBN is confidential, it is your responsibility to say so. The way to do this is by making a claim for confidentiality in the letter that you send in Part I of your PBN (§ 592.25(a)(4)).

(3) If you claim that the existence of your PBN is confidential, FDA will evaluate your claim. FDA will disclose the existence of your PBN, unless FDA determines that your claim demonstrates that the criteria for exemption from disclosure in § 20.61 of this chapter are satisfied.

(4) If FDA determines that the existence of your PBN is confidential at the time that we file it, the existence of your PBN will become available for public disclosure, in accordance with § 20.61 of this chapter, when the criteria for exemption from disclosure in § 20.61 of this chapter are no longer satisfied.

(b) *How could anyone else find out that I sent a PBN to FDA*?

(1) FDA will make a list of filed PBN's easily accessible to the public (e.g., by placing the information on the Internet or in a paper or electronic file that is available at FDA for public review and copying).

(2) In general, FDA will use the information submitted in Part II of each PBN (i.e., the information described in § 192.25(b) of this chapter) to prepare this list and will update this list on an approximately monthly basis.

(c) *Would the data or other information in my PBN (including an amendment to my PBN, or any data or information that I incorporate by reference) be available to the public*? (1) Ordinarily, the data or other information in your PBN are available for public disclosure, in accordance with § 20.61 of this chapter, as of the date that FDA files the PBN.

(2) If you believe that any or all of the data or other information in your PBN is confidential, it is your responsibility to say so. The way to do this is in the letter that you send in Part I of your PBN (§ 592.25(a)(4)). In addition, under § 592.20(b) and (c), it is your responsibility to provide copies of your PBN that do not contain any data or other information that you claim are confidential.

(3) If you claim that any or all of the data or other information in your PBN is confidential, FDA will evaluate your claim. FDA will disclose the data or information in your PBN, unless FDA determines that your claim demonstrates that the criteria for exemption from disclosure in § 20.61 of this chapter are satisfied.

(4) If FDA determines that any or all of the data or other information in your PBN is confidential as of the date that we file it, those data or information would be available for public disclosure, in accordance with 20.61 of this chapter, when the criteria for exemption from disclosure in § 20.61 of this chapter are no longer satisfied.

(5) As long as the existence of your PBN is confidential, then the data or other information in your PBN would not be available for public disclosure.

(d) *How could the public obtain disclosable data and information in my PBN*? Under the FOIA, the public could obtain the disclosable data or other information in your PBN or an amendment to your PBN, or that you incorporate by reference into your PBN, by looking for these data and information in FDA's electronic reading room or by asking FDA to send them a copy of these data and information.

(e) *Would the agency's evaluation of my PBN be available to the public*?

FDA will make the following information easily accessible to the public (e.g., by placing the information on the Internet or in a paper or electronic file that is available at FDA for public review and copying):

(1) The text of any letter issued by the agency under § 192.30(c) of this chapter.

(2) The text of the agency's completed evaluation of any notice submitted under this part.

Dated: September 22, 2000.

Jane E. Henney,

Commissioner of Food and Drugs.

Donna E. Shalala,

Secretary of Health and Human Services.

[FR Doc. 01–1046 Filed 1–17–01; 8:45 am]

BILLING CODE 4160–01–F

DEPARTMENT OF THE TREASURY

Internal Revenue Service

26 CFR Part 1

[REG–107047–00]

RIN 1545–AY02

Hedging Transactions

AGENCY: Internal Revenue Service (IRS), Treasury.

ACTION: Notice of proposed rulemaking and notice of public hearing.

SUMMARY: This document contains proposed regulations relating to the character of hedging transactions. These proposed regulations reflect changes to the law made by the Ticket to Work and Work Incentives Improvement Act of 1999. The proposed regulations affect businesses entering into hedging transactions. This document also provides notice of a public hearing on these proposed regulations.

DATES: Written or electronically generated comments must be received by April 25, 2001. Requests to speak (with outlines of oral comments to be discussed) at the public hearing scheduled for May 16, 2001, at 10 a.m., must be submitted by April 25, 2001.

ADDRESSES: Send submissions to: CC:M&SP:RU (REG–107047–00), room 5226, Internal Revenue Service, POB 7604, Ben Franklin Station, Washington, DC 20044. Submissions may be hand delivered between the hours of 8 a.m. and 5 p.m. to: CC:M&SP:RU (REG–107047–00), Courier's Desk, Internal Revenue Service, 1111 Constitution Avenue NW., Washington, DC. Alternatively, taxpayers may submit comments electronically via the Internet by selecting the ''Tax Regs'' option on the IRS Home Page, or by submitting comments directly to the IRS internet site at *http://www.irs.gov/tax_regs/regslist.html.* The public hearing will be held in the IRS auditorium, 1111 Constitution Ave., NW., Washington, DC.

FOR FURTHER INFORMATION CONTACT: Concerning the regulations, Jo Lynn Ricks, (202) 622–3920; concerning submissions of comments, the hearing, and/or to be placed on the building access list to attend the hearing, contact Lanita Vandyke, (202) 622–7180 (not toll-free numbers).

SUPPLEMENTARY INFORMATION:

Paperwork Reduction Act

The collection of information contained in this notice of proposed rulemaking has been reviewed and approved by the Office of Management and Budget in accordance with the Paperwork Reduction Act of 1995 (44 U.S.C. 3507(d)) under control numbers 1545–1403 and 1545–1480.

An agency may not conduct or sponsor, and a person is not required to respond to, a collection of information unless it displays a valid control number assigned by the Office of Management and Budget.

Books or records relating to a collection of information must be retained as long as their contents may become material in the administration of any internal revenue law. Generally, tax returns and tax return information are confidential, as required by 26 U.S.C. 6103.

Background

This document contains proposed amendments to 26 CFR part 1 under section 1221 of the Internal Revenue Code (Code). Prior to amendment in 1999, section 1221 generally defined a capital asset as property held by the taxpayer other than: (1) Stock in trade or other types of assets includible in inventory; (2) property used in a trade or business that is real property or property subject to depreciation; (3) certain copyrights (or similar property); (4) accounts or notes receivable acquired in the ordinary course of a trade or business; and (5) U.S. government publications.

In 1994, the IRS published in the **Federal Register** (59 FR 36360) final Treasury regulations under section 1221 providing for ordinary character treatment for most business hedges. The regulations generally apply to hedges that reduce risk with respect to ordinary property, ordinary obligations, and borrowings of the taxpayer and that meet certain identification requirements. (§ 1.1221–2). In 1996, the IRS published in the **Federal Register** (61 FR 517) final regulations on the character and timing of gain or loss from hedging transactions entered into by members of a consolidated group. The final regulations published in 1994 and 1996 are collectively referred to as the Treasury regulations in this preamble.

On December 17, 1999, section 1221 was amended by section 532 of the Ticket to Work and Work Incentives Improvement Act of 1999 (113 Stat. 1860) to provide ordinary gain or loss treatment for hedging transactions and consumable supplies. Section 1221(a)(7) provides ordinary treatment for hedging transactions that are clearly identified as such before the close of the day on which they were acquired, originated, or entered into.

The statute defines a hedging transaction generally to include a transaction entered into by the taxpayer in the normal course of business primarily to manage risk of interest rate, price changes, or currency fluctuations with respect to ordinary property, ordinary obligations, or borrowings of the taxpayer. § 1221(b)(2)(A)(i) and (ii). The statutory definition of hedging transaction also includes transactions to manage such other risks as the Secretary may prescribe in regulations. Section 1221(b)(2)(A)(iii). Further, the statute

grants the Secretary the authority to provide regulations to address the treatment of nonidentified or improperly identified hedging transactions, and hedging transactions involving related parties (sections 1221(b)(2)(B) and (b)(3), respectively). The statutory hedging provisions are effective for transactions entered into on or after December 17, 1999.

Section 1221(a)(8) provides that supplies of a type regularly consumed by the taxpayer in the ordinary course of a taxpayer's trade or business are not capital assets. That provision is effective for supplies held or acquired on or after December 17, 1999.

The legislative history to the hedging provisions states that Congress intended that the approach taken in the Treasury regulations with respect to the character of hedging transactions generally should be codified as an appropriate interpretation of present law. S. Rep. No. 201, 106th Cong., 1st Sess. 24 (1999). These proposed regulations conform the Treasury regulations to these statutory provisions.

Explanation of Provisions

Paragraph (a) of the proposed regulations provides basic rules for the treatment of hedging transactions. The substance of these rules is the same as the rules under § 1.1221–2(a).

Accordingly, paragraph (a)(1) of the proposed regulations generally provides that property that is part of a hedging transaction, as defined in section 1221(b)(2)(A) and paragraph (b) of the proposed regulations, is not a capital asset. Paragraph (a)(2) of the proposed regulations provides a similar rule for short sales and options. Where a short sale or option is part of a hedging transaction, as defined, any gain or loss on the short sale or option is ordinary. Under paragraph (a)(3), if a transaction falls outside the regulations, gain or loss from the transaction is not made ordinary by the fact that property is a surrogate for a non-capital asset, that the transaction serves as insurance against a business risk, that the transaction serves a hedging function, or that the transaction serves a similar function or purpose. As under the Treasury regulations, Congress intended that the hedging rules be the exclusive means through which the gains and losses on hedging transactions are treated as ordinary. S. Rep. No. 201, 106th Cong., 1st Sess. 25 (1999).

The provisions of the proposed regulations generally apply to determine the character of gain or loss from transactions that also are subject to various international provisions of the Code. Paragraph (a)(4) of the proposed regulations, however, provides that section 988 transactions are excluded from these regulations because gain or loss on those transactions is ordinary under section 988(a)(1). Paragraph (a)(4) of the proposed regulations also provides that the definition of a hedging transaction under § 1.1221–2(b) of the proposed regulations does not apply for purposes of the hedging exceptions to the subpart F rules of section 954(c) and certain hedging rules in the interest allocation regulations under section 864(e).

Regulations under § 1.482–8 will address risk management activities in the context of a global dealing operation. Thus, except to the extent provided in §§ 1.475(g)–2, 1.482–8, and 1.863–3(h), these regulations do not apply in determining the allocation and source of income for a participant in a global dealing operation or whether a risk management function related to the activities of a regular dealer in securities has been conducted.

Proposed regulations under §§ 1.882–5 and 1.884–1 also refer to hedging under § 1.1221–2 for purposes of determining assets and liabilities of a foreign corporation for interest allocation and branch tax purposes. The IRS and Treasury are evaluating the appropriate requirements necessary to implement cross-border and worldwide hedging rules for these purposes and seek comments in this regard. Therefore, paragraph (a)(4) of the proposed regulations provides that the definition of hedging transaction in paragraph (b) of the proposed regulations is inapplicable in determining the hedging requirements under sections 882(c) and 884, except to the extent provided in regulations under those sections.

Paragraph (b) of the proposed regulations restates the definition of hedging transaction in section 1221(b)(2)(A). Under this rule, a hedging transaction is generally a transaction that a taxpayer enters into in the normal course of its business primarily to manage the risk of interest rate or price changes or currency fluctuations with respect to ordinary property, ordinary obligations, or borrowings of the taxpayer.

Paragraph (c) of the proposed regulations provides rules of application designed to ensure that the definition of hedging transaction is applied reasonably to include most common types of business hedges. Congress intended that the approach taken in the Treasury regulations with respect to the character of hedging transactions generally should be codified as an appropriate interpretation of present law. S. Rep. No. 201, 106th Cong., 1st Sess. 24 (1999). The Senate Finance Committee believed that the Treasury regulations interpret risk reduction flexibly to provide hedging transaction treatment for fixed to floating hedges, certain written call options, dynamic hedges, partial hedges, recycled hedges, and hedges of aggregate risk (see § 1.1221–2(c)). *Id.* at n.12. The Committee believed that (depending on the facts) the treatment of those transactions as hedging transactions is appropriate and that it is also appropriate to modernize the definition of hedging transaction by providing risk management as the standard. *Id.* These proposed regulations revise the Treasury regulations to reflect the risk management standard.

Paragraph (c)(1) of the proposed regulations deals with the meaning of risk management. It provides that, except as otherwise provided in paragraph (c), a transaction satisfies the risk management standard if it reduces risk. To enter into a hedging transaction, the taxpayer must have risk when all of its operations are considered—that is, there must be risk on a ''macro'' basis. Nonetheless, a hedge of a single asset or liability, or pool of assets or liabilities, will be respected as managing risk if the hedge reduces the risk attributable to the item or items being hedged and if the hedge is reasonably calculated to reduce the overall risk of the taxpayer's operations. In addition, if a taxpayer hedges a particular asset or liability, or a pool of assets or liabilities, and the hedge is undertaken as part of a program to reduce the overall risk of the taxpayer's operations, the taxpayer need not show that the hedge reduces its overall risk.

Paragraph (c)(1) of the proposed regulations also recognizes that fixed to floating hedges and certain types of written options may manage risk and may be hedging transactions in appropriate situations. For example, a covered call with respect to assets held or a written put option with respect to assets to be acquired may be a hedging transaction.

In addition, paragraph (c)(1) of the proposed regulations provides that a hedging transaction includes a transaction that reverses or counteracts a hedging transaction. This rule recognizes that some transactions are used to eliminate some or all of the risk reduction accomplished through another hedging transaction. Although the transactions are not risk reducing if viewed independently, they are considered to be part of the larger hedging transaction.

Paragraph (c)(1) of the proposed regulations further provides that a

taxpayer may hedge any part or all of its risk for any part of the period during which it has risk. The proposed regulations also provide that the fact that a taxpayer frequently enters into and terminates hedging positions is not relevant to whether transactions are hedging transactions.

Except as otherwise provided in paragraph (c) of the proposed regulations, a transaction that is not entered into primarily to reduce risk is not a hedging transaction. For example, the so-called ''store-on-the-board'' transaction, in which a taxpayer disposes of its production output and enters into a long futures contract with respect to the same product, is not a hedging transaction. In this example, the long futures contact could be viewed as a surrogate for the storage of the commodity. The net proceeds from the sale of the production output and the gain or loss on the long futures contract simulates the price at which the production output would have sold if it had been physically stored and sold at a later time. However, because the production output to which the futures contract relates has been sold, there is no underlying position (with respect to ordinary property held or to be held) that exposes the taxpayer to price risk. Thus, the long position does not reduce risk. Moreover, gain or loss on the contract is not treated as ordinary on the grounds that it is a surrogate for inventory.

Paragraph (c)(2) of the proposed regulations provides that a hedging transaction may be entered into by using a position that was a hedge of one asset or liability to hedge another asset or liability.

Paragraph (c)(3) of the proposed regulations provides that the acquisition of certain assets, such as investments, may not be a hedging transaction. Even though acquisition of these assets may involve some risk reduction, they typically are not acquired primarily to manage risk. For example, a taxpayer's interest rate risk from a floating rate borrowing may be reduced by the purchase of debt instruments that bear a comparable floating rate. The proposed regulations provide that the acquisition of the debt instruments, however, is not made primarily to reduce risk and, therefore, is not a hedging transaction. Similarly, borrowings generally are not made primarily to manage risk. The IRS and Treasury request comments on the circumstances in which the acquisition of debt instruments or borrowings are made primarily to manage risk.

Paragraph (c)(4) defines the normal course requirement of paragraph (b) to include any transaction entered into in furtherance of a taxpayer's trade or business. Thus, for example, a liability hedge meets this requirement regardless of whether the liability is undertaken to fund current operations, an acquisition, or an expansion of a taxpayer's business. This definition does not apply to other uses of the term ''normal course'' in the Code or regulations.

Paragraph (c)(5) of the proposed regulations provides that a hedge of property or of an obligation is a hedging transaction only if a sale or exchange of the property, or performance or termination of the obligation, could not produce capital gain or loss. The special rule in the Treasury regulations for noninventory supplies (§ 1.1221–2(c)(5)(ii)), however, is not contained in these proposed regulations. Under the noninventory supply rule, if a taxpayer sells only a negligible amount of a noninventory supply, then, only for purposes of determining whether a hedge of the purchase of that noninventory supply is a hedging transaction, that noninventory supply is treated as ordinary property. This rule is not being proposed because section 1221(a)(8) generally provides ordinary gain or loss treatment for consumable supplies held or acquired on or after December 17, 1999.

Paragraph (c)(6) of the proposed regulations provides that the status of liability hedges as hedging transactions is determined without regard to the use that is made of the proceeds of a borrowing so long as the transaction is entered into in furtherance of the taxpayer's trade or business. The Service and Treasury believe that a liability hedge should not fail to qualify as a hedging transaction because the proceeds of the borrowing being hedged are used to purchase a capital asset.

Paragraph (c)(7) of the proposed regulations provides that, in the case of hedges of aggregate risk, all but a de minimis amount of the risk being hedged must be attributable to ordinary property, ordinary obligations, or borrowings.

Although the purpose of the rules in paragraph (c) is to ensure that the definition of hedging transaction will be interpreted reasonably to cover most common business hedges, not all hedges are intended to be covered. For example, the regulations do not apply where a taxpayer hedges a dividend stream, the overall profitability of a business unit, or other business risks that do not relate directly to interest rate or price changes or currency fluctuations with respect to ordinary property, ordinary obligations, or borrowings. Moreover, the regulations do not provide ordinary treatment for gain or loss from the disposition of stock where, for example, the stock is acquired to protect the goodwill or business reputation of the acquirer or to ensure the availability of goods.

Paragraph (c)(8) of the proposed regulations provides that a hedging transaction does not include a transaction entered into to manage risks other than interest rate or price changes, or currency fluctuations, unless a regulation, revenue ruling, or revenue procedure provides otherwise. Thus, until such guidance is published, a hedge of volume or revenue fluctuations is not a hedging transaction. One example of this type of hedge is a weather derivative used by an energy producer to hedge against the decrease in volume of sales from variations in weather patterns.

The IRS is considering whether to expand the definition of hedging transaction to include transactions that manage risks other than interest rate or price changes, or currency fluctuations with respect to ordinary property, ordinary obligations or borrowings of the taxpayer. The Service solicits comments on the types of risks that should be covered, including specific examples of derivative transactions that may be incorporated into future guidance.

The status of so-called ''gap'' hedges is not separately addressed in paragraph (c) of the proposed regulations. Insurance companies, for example, sometimes hedge the ''gap'' between their liabilities and the assets that fund them. Under the proposed regulations, a hedge of those assets does not qualify as a hedging transaction if the assets are capital assets. Whether a gap hedge qualifies as a liability hedge is a question of fact and depends on whether it is more closely associated with the liabilities than with the assets. For example, a contract to purchase assets is generally not a liability hedge even if the assets are being purchased to fund the liability. Other gap hedges may be appropriately treated as liability hedges and, therefore, may qualify as hedging transactions.

The rules in paragraphs (d), (e) and (f) of the proposed regulations, covering consolidated group hedging, identification and recordkeeping rules, and the effect of identification and non-identification, respectively, are generally unchanged from the corresponding rules in the Treasury regulations. This is because Congress generally intended to codify the approach to hedging transactions that was taken in the Treasury regulations. S.

Rep. No. 201, 106th Cong., 1st Sess. 24 (1999).

Paragraph (d) of the proposed regulations provides rules applicable to hedging by members of a consolidated group. The proposed regulations retain the single-entity approach of the Treasury regulations. That is, they treat the risk of one member of the group as the risk of the other members, as if all the members were divisions of a single corporation. Thus, a member of a consolidated group that hedges the risk of another member by entering into a transaction with a third party may receive ordinary gain or loss treatment on that transaction if the transaction otherwise qualifies as a hedging transaction.

Under this single-entity approach, intercompany transactions are neither hedging transactions nor hedged items. Because they are treated as transactions between divisions of a single corporation, intercompany transactions do not manage the risk of that single corporation and, therefore, fail to qualify as hedging transactions.

The proposed regulations also retain the separate-entity election of the Treasury regulations, permitting a consolidated group to treat its members as separate entities when applying the hedging rules. The election is made by attaching a statement to the group's federal income tax return.

For a group that elects separate-entity treatment, an intercompany transaction is treated as a hedging transaction if and only if: (1) It would qualify as a hedging transaction if entered into with an unrelated party; and (2) it is entered into with a member that, under its method of accounting, marks its position in the intercompany transaction to market. If these requirements are satisfied, the member with respect to which it is an intercompany hedging transaction must account for its position in the transaction under § 1.446–4, and, if that member properly identifies the transaction as a hedging transaction, each member treats the gain or loss from its position in the transaction as ordinary.

The proposed regulations provide that, even when these two requirements are met, these regulations supplant only the character and timing rules of § 1.1502–13. Other aspects of the transaction, such as the source of the gain or loss, are unaffected by these regulations and thus may be governed by other portions of § 1.1502–13.

Pursuant to section 1221(a)(7), paragraph (e)(1) of the proposed regulations provides that hedging transactions must be identified before the close of the day on which they are entered into. Paragraph (e)(2) of the proposed regulations requires that the item, items, or aggregate risk being hedged be identified substantially contemporaneously with entering into the hedging transaction. The identification must be made no more than 35 days after entering into the hedging transaction.

Paragraph (e)(3) of the proposed regulations contains a series of special rules for identifying certain types of hedging transactions. In the case of inventory, the identification must specify the type or class of inventory to which the hedge relates. If particular inventory purchases or sales transactions are being hedged, the taxpayer must also identify the expected date and the amount to be acquired or sold. In the case of hedges of aggregate risk, the identification requirement is satisfied if a taxpayer's records contain a description of the hedging program and if there is a system for identifying transactions as entered into as part of that program. The intent underlying this rule is to provide verifiable information with respect to the item being hedged without requiring the taxpayer to identify individually the many items that give rise to the aggregate risk being hedged.

Paragraph (e)(4) of the proposed regulations provides rules with respect to how an identification is made. It must be clear that the identification is being made for tax purposes. In lieu of separately identifying each transaction, however, a taxpayer may establish a system in which identification is indicated by the type of transaction or the manner in which the transaction is consummated or recorded.

Paragraph (e)(5) of the proposed regulations deals with the required identification where the taxpayer is a member of a consolidated group, and paragraph (e)(6) of the proposed regulations provides that an identification for purposes of section 1256(e)(2) is also an identification for purposes of § 1.1221–2(e)(1).

Pursuant to section 1221(b)(2)(B), paragraph (f) of the proposed regulations deals with the effect of identification and non-identification. The rules in this paragraph are the same as the rules in paragraph (f) of the Treasury regulations.

The proposed regulations under section 1256 generally restate the rules of § 1.1256(e)–1 that coordinate the identification of hedges for purposes of section 1256(e). The citations to section 1256(e)(2)(C) in the Treasury regulations have been replaced with citations to section 1256(e)(2) in the proposed regulations.

Proposed Effective Date

The proposed regulations are proposed to be effective for transactions entered into on or after January 18, 2001. However, the IRS will not challenge any transaction entered into on or after December 17, 1999, and before January 18, 2001 that satisfies the provisions of these proposed regulations.

Special Analyses

It has been determined that this notice of proposed rulemaking is not a significant regulatory action as defined in Executive Order 12866. Therefore, a regulatory assessment is not required. It is hereby certified that the collection of information in these regulations will not have a significant economic impact on a substantial number of small entities. This certification is based upon the fact that very few small businesses enter into hedging transactions due to their cost and complexity. Further, those small businesses that hedge enter into very few hedging transactions because hedging transactions are costly, complex, and require constant monitoring and a sophisticated understanding of the capital markets. Therefore, a Regulatory Flexibility analysis under the Regulatory Flexibility Act (5 U.S.C. chapter 6) is not required. Pursuant to section 7805(f) of the Internal Revenue Code, this notice of proposed rulemaking will be submitted to the Chief Counsel for Advocacy of the Small Business Administration for comment on its impact on small business.

Comments and Public Hearing

Before these proposed regulations are adopted as final regulations, consideration will be given to any electronic or written comments (a signed original and eight (8) copies of written comments) that are submitted timely (in the manner described in **ADDRESSES**) to the IRS. The IRS and Treasury request comments on the clarity of the proposed rules and how they may be made easier to understand. All comments will be available for public inspection and copying.

A public hearing has been scheduled for May 16, 2001, beginning at 10 a.m., in the IRS auditorium, Internal Revenue Building, 1111 Constitution Avenue, NW., Washington, DC. Due to building security procedures, visitors must enter at the 10th Street entrance, located between Constitution and Pennsylvania Avenues, NW. In addition, all visitors must present photo identification to enter the building. Because of access restrictions, visitors will not be

admitted beyond the immediate entrance area more than 15 minutes before the hearing starts. For information about having your name placed on the building access list to attend the hearing, see **FOR FURTHER INFORMATION CONTACT**.

The rules of 26 CFR 601.601(a)(3) apply to the hearing. Persons who wish to present oral comments at the hearing must submit written comments and an outline of topics to be discussed and the time to be devoted to each topic (signed original and eight (8) copies) by April 25, 2001. A period of 10 minutes will be allotted to each person making comments. An agenda showing the scheduling of the speakers will be prepared after the deadline for receiving outlines has passed. Copies of the agenda will be available free of charge at the hearing.

Drafting Information

The principal author of these regulations is Jo Lynn Ricks, Office of the Associate Chief Counsel (Financial Institutions and Products). However, other personnel from the IRS and Treasury Department participated in their development.

List of Subjects

26 CFR Part 1

Income taxes, Reporting and recordkeeping requirements.

26 CFR Part 602

Reporting and recordkeeping requirements.

Proposed Amendments to the Regulations

Accordingly, 26 CFR part 1 is proposed to be amended as follows:

PART 1—INCOME TAXES

Paragraph 1. The authority citation for part 1 is amended by revising the entry for § 1.1221 to read as follows:

Authority: 26 U.S.C. 7805 * * * § 1.1221–2 also issued under 26 U.S.C. 1221(b)(2)(A)(iii), (b)(2)(B), and (b)(3). * * *

Par. 2. Section 1.1221–2 is revised to read as follows:

§ 1.1221–2 Hedging transactions.

(a) *Treatment of hedging transactions*—(1) *In general.* This section governs the treatment of hedging transactions under section 1221(a)(7). Except as provided in paragraph (f)(2) of this section, the term capital asset does not include property that is part of a hedging transaction (as defined in paragraph (b) of this section).

(2) *Short sales and options.* This section also governs the character of gain or loss from a short sale or option that is part of a hedging transaction. Except as provided in paragraph (f)(2) of this section, gain or loss on a short sale or option that is part of a hedging transaction (as defined in paragraph (b) of this section) is ordinary income or loss.

(3) *Exclusivity.* If a transaction is not a hedging transaction as defined in paragraph (b) of this section, gain or loss from the transaction is not made ordinary on the grounds that property involved in the transaction is a surrogate for a noncapital asset, that the transaction serves as insurance against a business risk, that the transaction serves a hedging function, or that the transaction serves a similar function or purpose.

(4) *Coordination with other sections*—(i) *Section 988.* This section does not apply to determine the character of gain or loss realized on a section 988 transaction as defined in section 988(c)(1) or realized with respect to any qualified fund as defined in section 988(c)(1)(E)(iii).

(ii) *Sections 864(e) and 954(c).* Except as otherwise provided in regulations issued pursuant to sections 864(e) and 954(c), the definition of hedging transaction in paragraph (b) of this section does not apply for purposes of sections 864(e) and 954(c).

(iii) *Global dealing operation.* Except as otherwise provided in §§ 1.475(g)–2, 1.482–8, and 1.863–3(h), the rules of application for purposes of the definition of a hedging transaction in paragraph (c) of this section do not apply in determining the allocation and source of income with respect to a participant in a global dealing operation or in determining whether a risk management function related to the activities of a regular dealer in securities has been conducted. See § 1.482–8(a) for the definitions of global dealing operation, regular dealer in securities, and participant.

(iv) *Sections 882(c) and 884.* Except as otherwise provided in regulations issued under sections 882(c) and 884, the definition of hedging transaction in paragraph (b) of this section does not apply for purposes of those sections.

(b) *Hedging transaction defined.* Section 1221(b)(2)(A) provides that a hedging transaction is any transaction that a taxpayer enters into in the normal course of the taxpayer's trade or business primarily—

(1) To manage risk of price changes or currency fluctuations with respect to ordinary property (as defined in paragraph (c)(5) of this section) that is held or to be held by the taxpayer;

(2) To manage risk of interest rate or price changes or currency fluctuations with respect to borrowings made or to be made, or ordinary obligations incurred or to be incurred, by the taxpayer; or

(3) To manage such other risks as the Secretary may prescribe in regulations (see paragraph (c)(8) of this section).

(c) *Rules of application.* The rules of this paragraph (c) apply for purposes of the definition of the term hedging transaction in section 1221(b)(2)(A) and paragraph (b) of this section. These rules must be interpreted reasonably and consistently with the purposes of this section. Where no specific rules of application control, the definition of hedging transaction must be interpreted reasonably and consistently with the purposes of section 1221(b)(2)(A) and this section.

(1) *Managing risk*—(i) *Transactions that manage risk.* Whether a transaction manages a taxpayer's risk is determined based on all of the facts and circumstances surrounding the taxpayer's business and the transaction. In general, a taxpayer's hedging strategies and policies as reflected in the taxpayer's minutes or other records are evidence of whether particular transactions were entered into primarily to manage the taxpayer's risk.

(ii) *Micro and macro hedges*—(A) *In general.* A taxpayer has risk of a particular type only if it is at risk when all of its operations are considered. Nonetheless, a hedge of a particular asset or liability generally will be respected as managing risk if it reduces the risk attributable to the asset or liability and if it is reasonably expected to reduce the overall risk of the taxpayer's operations. If a taxpayer hedges particular assets or liabilities, or groups of assets or liabilities, and the hedges are undertaken as part of a program that, as a whole, is reasonably expected to reduce the overall risk of the taxpayer's operations, the taxpayer generally does not have to demonstrate that each hedge that was entered into pursuant to the program reduces its overall risk.

(B) *Fixed-to-floating hedges.* Under the principles of paragraph (c)(1)(ii)(A) of this section, a transaction that economically converts an interest rate or price from a fixed rate or price to a floating rate or price may manage risk. For example, if a taxpayer's income varies with interest rates, the taxpayer may be at risk if it has a fixed rate liability. Similarly, a taxpayer with a fixed cost for its inventory may be at risk if the price at which the inventory can be sold varies with a particular factor. Thus, a transaction that converts

an interest rate or price from fixed to floating may be a hedging transaction.

(iii) *Written options.* A written option may manage risk. For example, in appropriate circumstances, a written call option with respect to assets held by a taxpayer or a written put option with respect to assets to be acquired by a taxpayer may be a hedging transaction. See also paragraph (c)(1)(v) of this section.

(iv) *Extent of risk management.* A taxpayer may hedge all or any portion of its risk for all or any part of the period during which it is exposed to the risk.

(v) *Transactions that counteract hedging transactions.* If a transaction is entered into primarily to counteract all or any part of the risk reduction effected by one or more hedging transactions, the transaction is a hedging transaction. For example, if a written option is used to reduce or eliminate the risk reduction obtained from another position such as a purchased option, then it may be a hedging transaction.

(vi) *Number of transactions.* The fact that a taxpayer frequently enters into and terminates positions (even if done on a daily or more frequent basis) is not relevant to whether these transactions are hedging transactions. Thus, for example, a taxpayer hedging the risk associated with an asset or liability may frequently establish and terminate positions that hedge that risk, depending on the extent the taxpayer wishes to be hedged. Similarly, if a taxpayer maintains its level of risk exposure by entering into and terminating a large number of transactions in a single day, its transactions may nonetheless qualify as hedging transactions.

(vii) *Transactions that do not manage risk.* A transaction that is not entered into to reduce a taxpayer's risk does not manage risk. For example, assume that a taxpayer produces a commodity for sale, sells the commodity, and enters into a long futures or forward contract in that commodity in the hope that the price will increase. Because the long position does not reduce risk, and is not otherwise treated as a hedging transaction in this paragraph (c), the transaction is not a hedging transaction. Moreover, gain or loss on the contract is not made ordinary on the grounds that it is a surrogate for inventory. See paragraph (a)(3) of this section.

(2) *Entering into a hedging transaction.* A taxpayer may enter into a hedging transaction by using a position that was a hedge of one asset or liability as a hedge of another asset or liability (recycling).

(3) *No investments as hedging transactions.* If an asset (such as an investment) is not acquired primarily to manage risk, the purchase or sale of that asset is not a hedging transaction even if the terms of the asset limit or reduce the taxpayer's risk with respect to other assets or liabilities. For example, a taxpayer's interest rate risk from a floating rate borrowing may be reduced by the purchase of debt instruments that bear a comparable floating rate. The acquisition of the debt instruments, however, is not a hedging transaction because the transaction is not entered into primarily to reduce the taxpayer's risk. Similarly, borrowings generally are not made primarily to manage risk.

(4) *Normal course.* Solely for purposes of paragraph (b) of this section, if a transaction is entered into in furtherance of a taxpayer's trade or business, the transaction is entered into in the normal course of the taxpayer's trade or business. This rule applies even if the risk to be managed relates to the expansion of an existing business or the acquisition of a new trade or business.

(5) *Ordinary property and obligations.* Property is ordinary property to a taxpayer only if a sale or exchange of the property by the taxpayer could not produce capital gain or loss regardless of the taxpayer's holding period when the sale or exchange occurs. Thus, for example, property used in a trade or business within the meaning of section 1231(b) (determined without regard to the holding period specified in that section) is not ordinary property. An obligation is an ordinary obligation if performance or termination of the obligation by the taxpayer could not produce capital gain or loss. For purposes of the preceding sentence, termination has the same meaning as in section 1234A.

(6) *Borrowings.* Whether hedges of a taxpayer's debt issuances (borrowings) are hedging transactions is determined without regard to the use of the proceeds of the borrowing.

(7) *Hedging an aggregate risk.* The term hedging transaction includes a transaction that manages an aggregate risk of interest rate changes, price changes, and/or currency fluctuations only if all of the risk, or all but a de minimis amount of the risk, is with respect to ordinary property, ordinary obligations, or borrowings.

(8) *Hedges of other risks.* Except as otherwise determined in a regulation, revenue ruling, or revenue procedure, a hedging transaction does not include a transaction entered into to manage risks other than interest rate or price changes, or currency fluctuations.

(d) *Hedging by members of a consolidated group*—(1) *General rule: single-entity approach.* For purposes of this section, the risk of one member of a consolidated group is treated as the risk of the other members as if all of the members of the group were divisions of a single corporation. For example, if any member of a consolidated group hedges the risk of another member of the group by entering into a transaction with a third party, that transaction may potentially qualify as a hedging transaction. Conversely, intercompany transactions are not hedging transactions because, when considered as transactions between divisions of a single corporation, they do not manage the risk of that single corporation.

(2) *Separate-entity election.* In lieu of the single-entity approach specified in paragraph (d)(1) of this section, a consolidated group may elect separate-entity treatment of its hedging transactions. If a group makes this separate-entity election, the following rules apply.

(i) *Risk of one member not risk of other members.* Notwithstanding paragraph (d)(1) of this section, the risk of one member is not treated as the risk of other members.

(ii) *Intercompany transactions.* An intercompany transaction is a hedging transaction (an intercompany hedging transaction) with respect to a member of a consolidated group if and only if it meets the following requirements—

(A) The position of the member in the intercompany transaction would qualify as a hedging transaction with respect to the member (taking into account paragraph (d)(2)(i) of this section) if the member had entered into the transaction with an unrelated party; and

(B) The position of the other member (the marking member) in the transaction is marked to market under the marking member's method of accounting.

(iii) *Treatment of intercompany hedging transactions.* An intercompany hedging transaction (that is, a transaction that meets the requirements of paragraphs (d)(2)(ii)(A) and (B) of this section) is subject to the following rules—

(A) The character and timing rules of § 1.1502–13 do not apply to the income, deduction, gain, or loss from the intercompany hedging transaction; and

(B) Except as provided in paragraph (f)(3) of this section, the character of the marking member's gain or loss from the transaction is ordinary.

(iv) *Making and revoking the election.* Unless the Commissioner otherwise prescribes, the election described in this paragraph (d)(2) must be made in a separate statement saying ''[Insert Name and Employer Identification Number of Common Parent] HEREBY ELECTS THE APPLICATION OF SECTION 1.1221–

2(d)(2) (THE SEPARATE-ENTITY APPROACH).'' The statement must also indicate the date as of which the election is to be effective. The election must be signed by the common parent and filed with the group's federal income tax return for the taxable year that includes the first date for which the election is to apply. The election applies to all transactions entered into on or after the date so indicated. The election may be revoked only with the consent of the Commissioner.

(3) *Definitions.* For definitions of consolidated group, divisions of a single corporation, group, intercompany transactions, and member, see section 1502 and the regulations thereunder.

(4) *Examples.* The following examples illustrate this paragraph (d):

General Facts. In these examples, *O* and *H* are members of the same consolidated group. *O*'s business operations give rise to interest rate risk ''*A*,'' which *O* wishes to hedge. *O* enters into an intercompany transaction with *H* that transfers the risk to *H*. *O*'s position in the intercompany transaction is ''*B*,'' and *H*'s position in the transaction is ''*C*.'' *H* enters into position ''*D*'' with a third party to reduce the interest rate risk it has with respect to its position *C*. *D* would be a hedging transaction with respect to risk *A* if *O*'s risk *A* were *H*'s risk.

Example 1. Single-entity treatment—(i) *General rule.* Under paragraph (d)(1) of this section, *O*'s risk *A* is treated as *H*'s risk, and therefore *D* is a hedging transaction with respect to risk *A*. Thus, the character of *D* is determined under the rules of this section, and the income, deduction, gain, or loss from *D* must be accounted for under a method of accounting that satisfies § 1.446–4. The intercompany transaction *B–C* is not a hedging transaction and is taken into account under § 1.1502–13.

(ii) *Identification. D* must be identified as a hedging transaction under paragraph (e)(1) of this section, and *A* must be identified as the hedged item under paragraph (e)(2) of this section. Under paragraph (e)(5) of this section, the identification of *A* as the hedged item can be accomplished by identifying the positions in the intercompany transaction as hedges or hedged items, as appropriate. Thus, substantially contemporaneous with entering into *D*, *H* may identify *C* as the hedged item and *O* may identify *B* as a hedge and *A* as the hedged item.

Example 2. Separate-entity election; counterparty that does not mark to market. In addition to the *General Facts* stated above, assume that the group makes a separate-entity election under paragraph (d)(2) of this section. If *H* does not mark *C* to market under its method of accounting, then *B* is not a hedging transaction, and the *B–C* intercompany transaction is taken into account under the rules of section 1502. *D* is not a hedging transaction with respect to *A*, but *D* may be a hedging transaction with respect to *C* if *C* is ordinary property or an ordinary obligation and if the other requirements of paragraph (b) of this section are met. If *D* is not part of a hedging transaction, then *D* may be part of a straddle for purposes of section 1092.

Example 3. Separate-entity election; counterparty that marks to market. The facts are the same as in *Example 2* above, except that *H* marks *C* to market under its method of accounting. Also assume that *B* would be a hedging transaction with respect to risk *A* if *O* had entered into that transaction with an unrelated party. Thus, for *O*, the *B–C* transaction is an intercompany hedging transaction with respect to *O*'s risk *A*, the character and timing rules of § 1.1502–13 do not apply to the *B–C* transaction, and *H*'s income, deduction, gain, or loss from *C* is ordinary. However, other attributes of the items from the *B–C* transaction are determined under § 1.1502–13. *D* is a hedging transaction with respect to *C* if it meets the requirements of paragraph (b) of this section.

(e) *Identification and recordkeeping*—(1) *Same-day identification of hedging transactions.* Under section 1221(a)(7), a taxpayer that enters into a hedging transaction (including recycling an existing hedging transaction) must clearly identify it as a hedging transaction before the close of the day on which the taxpayer acquired, originated, or entered into the transaction (or recycled the existing hedging transaction).

(2) *Substantially contemporaneous identification of hedged item*—(i) *Content of the identification.* A taxpayer that enters into a hedging transaction must identify the item, items, or aggregate risk being hedged. Identification of an item being hedged generally involves identifying a transaction that creates risk, and the type of risk that the transaction creates. For example, if a taxpayer is hedging the price risk with respect to its June purchases of corn inventory, the transaction being hedged is the June purchase of corn and the risk is price movements in the market where the taxpayer buys its corn. For additional rules concerning the content of this identification, see paragraph (e)(3) of this section.

(ii) *Timing of the identification.* The identification required by this paragraph (e)(2) must be made substantially contemporaneously with entering into the hedging transaction. An identification is not substantially contemporaneous if it is made more than 35 days after entering into the hedging transaction.

(3) *Identification requirements for certain hedging transactions.* In the case of the hedging transactions described in this paragraph (e)(3), the identification under paragraph (e)(2) of this section must include the information specified.

(i) *Anticipatory asset hedges.* If the hedging transaction relates to the anticipated acquisition of assets by the taxpayer, the identification must include the expected date or dates of acquisition and the amounts expected to be acquired.

(ii) *Inventory hedges.* If the hedging transaction relates to the purchase or sale of inventory by the taxpayer, the identification is made by specifying the type or class of inventory to which the transaction relates. If the hedging transaction relates to specific purchases or sales, the identification must also include the expected dates of the purchases or sales and the amounts to be purchased or sold.

(iii) *Hedges of debt of the taxpayer*—(A) *Existing debt.* If the hedging transaction relates to accruals or payments under an issue of existing debt of the taxpayer, the identification must specify the issue and, if the hedge is for less than the full issue price or the full term of the debt, the amount of the issue price and the term covered by the hedge.

(B) *Debt to be issued.* If the hedging transaction relates to the expected issuance of debt by the taxpayer or to accruals or payments under debt that is expected to be issued by the taxpayer, the identification must specify the following information: the expected date of issuance of the debt; the expected maturity or maturities; the total expected issue price; and the expected interest provisions. If the hedge is for less than the entire expected issue price of the debt or the full expected term of the debt, the identification must also include the amount or the term being hedged. The identification may indicate a range of dates, terms, and amounts, rather than specific dates, terms, or amounts. For example, a taxpayer might identify a transaction as hedging the yield on an anticipated issuance of fixed rate debt during the second half of its fiscal year, with the anticipated amount of the debt between $75 million and $125 million, and an anticipated term of approximately 20 to 30 years.

(iv) *Hedges of aggregate risk*—(A) *Required identification.* If a transaction hedges aggregate risk as described in paragraph (c)(7) of this section, the identification under paragraph (e)(2) of this section must include a description of the risk being hedged and of the hedging program under which the hedging transaction was entered. This requirement may be met by placing in the taxpayer's records a description of the hedging program and by establishing a system under which individual transactions can be identified as being entered into pursuant to the program.

(B) *Description of hedging program.* A description of a hedging program must include an identification of the type of risk being hedged, a description of the type of items giving rise to the risk being aggregated, and sufficient additional information to demonstrate that the program is designed to reduce aggregate risk of the type identified. If the program contains controls on speculation (for example, position limits), the description of the hedging program must also explain how the controls are established, communicated, and implemented.

(4) *Manner of identification and records to be retained*—(i) *Inclusion of identification in tax records.* The identification required by this paragraph (e) must be made on, and retained as part of, the taxpayer's books and records.

(ii) *Presence of identification must be unambiguous.* The presence of an identification for purposes of this paragraph (e) must be unambiguous. The identification of a hedging transaction for financial accounting or regulatory purposes does not satisfy this requirement unless the taxpayer's

books and records indicate that the identification is also being made for tax purposes. The taxpayer may indicate that individual hedging transactions, or a class or classes of hedging transactions, that are identified for financial accounting or regulatory purposes are also being identified as hedging transactions for purposes of this section.

(iii) *Manner of identification.* The taxpayer may separately and explicitly make each identification, or, so long as paragraph (e)(4)(ii) of this section is satisfied, the taxpayer may establish a system pursuant to which the identification is indicated by the type of transaction or by the manner in which the transaction is consummated or recorded. An identification under this system is made at the later of the time that the system is established or the time that the transaction satisfies the terms of the system by being entered, or by being consummated or recorded, in the designated fashion.

(iv) *Examples.* The following examples illustrate the principles of paragraph (e)(4)(iii) of this section and assume that the other requirements of paragraph (e) are satisfied.

(A) A taxpayer can make an identification by designating a hedging transaction for (or placing it in) an account that has been identified as containing only hedges of a specified item (or of specified items or specified aggregate risk).

(B) A taxpayer can make an identification by including and retaining in its books and records a statement that designates all future transactions in a specified derivative product as hedges of a specified item, items, or aggregate risk.

(C) A taxpayer can make an identification by designating a certain mark, a certain form, or a certain legend as meaning that a transaction is a hedge of a specified item (or of specified items or a specified aggregate risk). Identification can be made by placing the designated mark on a record of the transaction (for example, trading ticket, purchase order, or trade confirmation) or by using the designated form or a record that contains the designated legend.

(5) *Identification of hedges involving members of the same consolidated group*—(i) *General rule: single-entity approach.* A member of a consolidated group must satisfy the requirements of this paragraph (e) as if all of the members of the group were divisions of a single corporation. Thus, the member entering into the hedging transaction with a third party must identify the hedging transaction under paragraph (e)(1) of this section. Under paragraph (e)(2) of this section, that member must also identify the item, items, or aggregate risk that is being hedged, even if the item, items, or aggregate risk relates primarily or entirely to other members of the group. If the members of a group use intercompany transactions to transfer risk within the group, the requirements of paragraph (e)(2) of this section may be met by identifying the intercompany transactions, and the risks hedged by the intercompany transactions, as hedges or hedged items, as appropriate. Because identification of the intercompany transaction as a hedge serves solely to identify the hedged item, the identification is timely if made within the period required by paragraph (e)(2) of this section. For example, if a member transfers risk in an intercompany transaction, it may identify under the rules of this paragraph (e) both its position in that transaction and the item, items, or aggregate risk being hedged. The member that hedges the risk outside the group may identify under the rules of this paragraph (e) both its position with the third party and its position in the intercompany transaction. Paragraph (d)(4) *Example 1* of this section illustrates this identification.

(ii) *Rule for consolidated groups making the separate-entity election.* If a consolidated group makes the separate-entity election under paragraph (d)(2) of this section, each member of the group must satisfy the requirements of this paragraph (e) as though it were not a member of a consolidated group.

(6) *Consistency with section 1256(e)(2).* Any identification for purposes of section 1256(e)(2) is also an identification for purposes of paragraph (e)(1) of this section.

(f) *Effect of identification and non-identification*—(1) *Transactions identified*—(i) *In general.* If a taxpayer identifies a transaction as a hedging transaction for purposes of paragraph (e)(1) of this section, the identification is binding with respect to gain, whether or not all of the requirements of paragraph (e) are satisfied. Thus, gain from that transaction is ordinary income. If the transaction is not in fact a hedging transaction described in paragraph (b) of this section, however, paragraphs (a)(1) and (2) of this section do not apply and the character of loss is determined without reference to whether the transaction is a surrogate for a noncapital asset, serves as insurance against a business risk, serves a hedging function, or serves a similar function or purpose. Thus, the taxpayer's identification of the transaction as a hedging transaction does not itself make loss from the transaction ordinary.

(ii) *Inadvertent identification.* Notwithstanding paragraph (f)(1)(i) of this section, if the taxpayer identifies a transaction as a hedging transaction for purposes of paragraph (e) of this section, the character of the gain is determined as if the transaction had not been identified as a hedging transaction if—

(A) The transaction is not a hedging transaction (as defined in paragraph (b) of this section);

(B) The identification of the transaction as a hedging transaction was due to inadvertent error; and

(C) All of the taxpayer's transactions in all open years are being treated on either original or, if necessary, amended returns in a manner consistent with the principles of this section.

(2) *Transactions not identified*—(i) *In general.* Except as provided in paragraphs (f)(2)(ii) and (iii) of this section, the absence of an identification that satisfies the requirements of paragraph (e)(1) of this section is binding and establishes that a transaction is not a hedging transaction. Thus, subject to the exceptions, the rules of paragraphs (a)(1) and (2) of this section do not apply, and the character of gain or loss is determined without reference to whether the transaction is a surrogate for a noncapital asset, serves as insurance against a business risk, serves a hedging function, or serves a similar function or purpose.

(ii) *Inadvertent error.* If a taxpayer does not make an identification that satisfies the requirements of paragraph (e) of this section, the taxpayer may treat gain or loss from the transaction as ordinary income or loss under paragraph (a)(1) or (2) of this section if—

(A) The transaction is a hedging transaction (as defined in paragraph (b) of this section);

(B) The failure to identify the transaction was due to inadvertent error; and

(C) All of the taxpayer's hedging transactions in all open years are being treated on either original or, if necessary, amended returns as provided in paragraphs (a)(1) and (2) of this section.

(iii) *Anti-abuse rule.* If a taxpayer does not make an identification that satisfies all the requirements of paragraph (e) of this section but the taxpayer has no reasonable grounds for treating the transaction as other than a hedging transaction, then gain from the transaction is ordinary. The reasonableness of the taxpayer's failure to identify a transaction is determined by taking into consideration not only the requirements of paragraph (b) of this section but also the taxpayer's treatment of the transaction for financial accounting or other purposes and the taxpayer's identification of similar transactions as hedging transactions.

(3) *Transactions by members of a consolidated group*—(i) *Single-entity approach.* If a consolidated group is under the general rule of paragraph (d)(1) of this section (the single-entity approach), the rules of this paragraph (f) apply only to transactions that are not intercompany transactions.

(ii) *Separate-entity election.* If a consolidated group has made the election under paragraph (d)(2) of this section, then, in addition to the rules of paragraphs (f)(1) and (2) of this section, the following rules apply:

(A) If an intercompany transaction is identified as a hedging transaction but does not meet the requirements of paragraphs (d)(2)(ii)(A) and (B) of this section, then, notwithstanding any contrary provision in § 1.1502–13, each party to the transaction is subject to the rules of paragraph (f)(1) of this section with respect to the transaction as though it had incorrectly identified its position in the transaction as a hedging transaction.

(B) If a transaction meets the requirements of paragraphs (d)(2)(ii) (A) and (B) of this section but the transaction is not identified as a hedging transaction, each party to the transaction is subject to the rules of paragraph (f)(2) of this section. (Because the transaction is an intercompany hedging transaction, the character and timing rules of § 1.1502–13 do not apply. See paragraph (d)(2)(iii)(A) of this section.)

(g) *Effective date.* The rules of this section apply to transactions entered into on or after January 18, 2001.

Par. 2. Section 1.1256(e)–1 is revised to read as follows:

§ 1.1256(e)–1 Identification of hedging transactions.

(a) *Identification and recordkeeping requirements.* Under section 1256(e)(2), a taxpayer that enters into a hedging transaction must identify the transaction as a hedging transaction before the close of the day on which the taxpayer enters into the transaction.

(b) *Requirements for identification.* The identification of a hedging transaction for purposes of section 1256(e)(2) must satisfy the requirements of § 1.1221–2(e)(1). Solely for purposes of section 1256(f)(1), however, an identification that does not satisfy all of the requirements of § 1.1221–2(e)(1) is nevertheless treated as an identification under section 1256(e)(2).

(c) *Consistency with § 1.1221–2.* Any identification for purposes of § 1.1221–2(e)(1) is also an identification for purposes of this section. If a taxpayer satisfies the requirements of § 1.1221–2(f)(1)(ii), the transaction is treated as if it were not identified as a hedging transaction for purposes of section 1256(e)(2).

(d) *Effective date.* This section applies to transactions entered into on or after January 18, 2001.

Robert E. Wenzel,

Deputy Commissioner of Internal Revenue.

[FR Doc. 01–491 Filed 1–17–01; 8:45 am]

BILLING CODE 4830–01–P

DEPARTMENT OF TREASURY

Internal Revenue Service

26 CFR Part 1

[REG–105801–00]

RIN 1545–AX92

Capitalization of Interest and Carrying Charges Properly Allocable to Straddles

AGENCY: Internal Revenue Service (IRS), Treasury.

ACTION: Notice of proposed rulemaking and notice of public hearing.

SUMMARY: This document contains proposed regulations that clarify the application of the straddle rules to a variety of financial instruments. The proposed regulations clarify what constitutes interest and carrying charges and when interest and carrying charges are properly allocable to personal property that is part of a straddle. The proposed regulations also clarify that a taxpayer's obligation under a debt instrument can be a position in personal property that is part of a straddle. The proposed regulations provide guidance to taxpayers that enter into straddle transactions. This document provides notice of a public hearing on these proposed regulations.

DATES: Written and electronic comments and requests to appear and outlines of topics to be discussed at the public hearing scheduled for May 22, 2001, at 10 a.m., must be submitted by May 1, 2001.

ADDRESSES: Send submissions to: CC:M&SP:RU (REG–105801–00), room 5226, Internal Revenue Service, POB 7604, Ben Franklin Station, Washington, DC 20044. Submissions may be hand delivered between the hours of 8 a.m. and 5 p.m. to: CC:M&SP:RU (REG–105801–00), Courier's Desk, Internal Revenue Service, 1111 Constitution Avenue NW., Washington, DC.

Alternatively, taxpayers may submit comments electronically via the Internet by submitting comments directly to the IRS Internet site at http://www.irs.gov/tax_regs/regslist.html. The public hearing will be held in the Auditorium, Internal Revenue Building, 1111 Constitution Avenue, NW., Washington, DC.

FOR FURTHER INFORMATION CONTACT: Concerning the proposed regulations, Kenneth Christman (202) 622–3950; concerning submission and delivery of comments and the public hearing, Treena Garrett, (202) 622–7180 (not toll-free numbers).

SUPPLEMENTARY INFORMATION:

Background

Sections 501 and 502 of the Economic Recovery Tax Act of 1981 (Pub. L. 97–34, 95 Stat. 172) added sections 1092 and 263(g), respectively, to the Internal Revenue Code to address certain deferral and conversion strategies involving economically offsetting positions in actively traded personal property. These economically offsetting positions are called straddles. Section 1092(c)(1).

In general, under section 1092, a taxpayer that realizes a loss on a position in actively traded personal property must defer the recognition of the loss to the extent the taxpayer has unrecognized gain on an economically offsetting position in the property. This deferral rule matches the recognition of loss with the recognition of the economically offsetting income. Section 263(g) addresses interest and carrying charges properly allocable to personal property that is part of a straddle. Under this section, these otherwise deductible expenses are not currently deductible. Instead, they must be capitalized into the basis of the property. By requiring capitalization, section 263(g) prevents: (1) A taxpayer from gaining a timing advantage by accruing deductions associated with carrying the straddle transaction before recognizing income from a position in personal property that is part of the straddle; and (2) the deductions from having a character different from that of the income.

These proposed regulations provide certain rules with respect to the application of section 263(g) and section 1092.

Explanation of Provisions

The proposed regulations consist of § 1.263(g)–1, which provides a general introduction, and §§ 1.263(g)–2, 1.263(g)–3, 1.263(g)–4, and 1.263(g)–5, described below. The proposed regulations also include a new paragraph 1.1092(d)–1(d).

The proposed regulations generally address four issues: (1) The definition of *personal property* as such term is used in section 263(g) (in § 1.263(g)–2); (2) the type of payments that are subject to the capitalization rules of section 263(g) (in § 1.263(g)–3); (3) the operation of the capitalization rules of section 263(g) (in § 1.263(g)–4); and (4) the circumstances under which an issuer's obligation under a debt instrument can be a position in actively traded personal property and, therefore, part of a straddle (in § 1.1092(d)–1(d)). These issues are discussed in more detail below.

Definition of the Term Personal Property for Purposes of Section 263(g)

Section 263(g)(1) requires capitalization of interest and carrying charges properly allocable to personal property that is part of a straddle (as defined in section 1092(c)). Section 1092(d)(1) defines personal property for purposes of section 1092, as personal property of a type that is actively traded. Commentators have suggested that because sections 263(g) and 1092 were enacted at the same time, the term *personal property* as used in section 263(g) should be given the same definition under section 1092(d)(1). This would limit the definition of personal property in section 263(g) to personal property of a type that is actively traded.

Despite this suggestion, the proposed regulations provide that personal property has its common law meaning in section 263(g) for two reasons. First, the definition in section 1092(d)(1) by its terms applies only for purposes of section 1092. Second, the broader, common law interpretation of personal property more closely accords with the purposes of section 263(g). Application of the limited definition in section

1092(d)(1) for purposes of section 263(g) could result in dissimilar tax treatment of economically similar transactions. For example, adoption of the narrower definition would cause section 263(g) to apply to a transaction in which a taxpayer borrows to purchase actively traded personal property that is a part of a straddle but not to a similar transaction in which the taxpayer borrows to purchase a derivative instrument that is not itself actively traded but is a position in actively traded property.

Consequently, proposed § 1.263(g)–2 defines personal property as a property right, whether or not actively traded, other than a right in real property. This definition includes both financial positions that provide substantial rights but do not impose substantial obligations on the holder (e.g., common stock or a purchased option) and executory contracts that impose both rights and obligations on the holder (e.g., notional principal contracts (NPC's) and forward transactions). However, the definition excludes straddles comprised only of financial positions that impose only obligations on the holder (e.g., the obligor's position in a debt instrument or a writer's position in an option).

Payments That Are Subject to the Capitalization Rules of Section 263(g)

Section 263(g)(1) provides for the capitalization of interest and carrying charges. For this purpose, *interest and carrying charges* are collectively defined in section 263(g)(2) as ''interest incurred or continued to purchase or carry the personal property'' and ''all other amounts (including charges to insure, store, or transport) paid or incurred to carry the personal property,'' less certain types of income from the personal property.

The phrase ''incurred or continued to purchase or carry'' also appears in section 265(a)(2), which disallows interest expense on indebtedness incurred or continued to purchase or carry tax-exempt debt. Rev. Proc. 72–18 (1972–1 C.B. 740) sets out rules for determining when this standard is met for purposes of section 265(a)(2). Under that revenue procedure, indebtedness issued by a taxpayer that is not a dealer in tax-exempt obligations meets this standard if: (1) The proceeds of the indebtedness are directly traceable to the purchase of the tax-exempt obligations, (2) the tax-exempt obligations are used as collateral for the borrowing, or (3) the totality of the facts and circumstances supports a reasonable inference that the purpose of the borrowing was to purchase or carry tax-exempt obligations. In general, the facts-and-circumstances test is met if there is a ''sufficiently direct relationship'' between the borrowing and the investment in the tax-exempt obligations. Similarly, the proposed regulations provide that a sufficiently direct relationship between indebtedness or other financing and personal property that is part of a straddle exists if payments on the indebtedness or other financing are determined by reference to the value or change in value of the personal property. See § 1.263(g)–3(c).

Section 263(g) also applies to ''all other amounts (including charges to insure, store or transport the personal property)'' paid or incurred to carry personal property that is part of a straddle. As noted by one commentator, ''taxpayers should not be permitted to deduct items incurred in connection with protecting or preserving the value of assets'' that are part of a straddle. Therefore, the term, *to carry* in the context of section 263(g) includes the reduction of the risk of holding an asset. Because straddles necessarily involve positions that offset each other, the positions ''carry'' each other.

Accordingly, under § 1.263(g)–3(b) of the proposed regulations, interest and carrying charges subject to capitalization under section 263(g) include: (1) Otherwise deductible payments or accruals (including interest and original issue discount) on indebtedness or other financing issued or continued to purchase or carry personal property that is part of a straddle; (2) otherwise deductible fees or expenses paid or incurred in connection with the taxpayer's acquiring or holding personal property that is part of a straddle, including, but not limited to, fees or expenses incurred to purchase, insure, store, maintain, or transport the personal property; and (3) other otherwise deductible payments or accruals on financial instruments that are part of a straddle or that carry part of a straddle.

Section 263(g) requires capitalization of interest and carrying charges that exceed certain specified income inclusions (allowable offsets) listed in section 263(g)(2)(B). Section 1.263(g)–3(e) sets forth the allowable offsets, including amounts that are receipts or accruals on financial instruments that are part of a straddle or carry part of a straddle. The Treasury Department and the IRS solicit comments regarding whether other amounts should be treated as allowable offsets for purposes of section 263(g).

Operation of the Capitalization Rules of Section 263(g)

Generally, section 263(g) coordinates the character and timing of items of income and loss attributable to a taxpayer's position in a straddle by allocating interest and carrying charges to the capital account of a position in personal property that is part of the straddle. Proposed regulation § 1.263(g)–4 provides a set of allocation rules governing the ''capitalization'' of interest and carrying charges.

In many cases, certain allocation rules readily suggest themselves.

Congress was aware of ''cash and carry'' transactions in adopting section 263(g). See H.R. Rep. No. 201, 97th Cong. 1st Sess. 203–04 (1981). In a typical transaction, a taxpayer borrows to purchase personal property and sells the property forward. The debt instrument generates ordinary deductions (interest expense) that precede predictable (and approximately equal) capital gains on the sale of the personal property. Coordination of the amount and timing of income and loss in a cash and carry transaction is achieved under the proposed regulation by allocating the interest expense to the capital account of the personal property. This rule applies to all transactions in which a taxpayer has borrowed to purchase personal property that is part of a straddle.

If the proceeds of a borrowing are not used to purchase personal property, a second allocation rule allocates interest expense to personal property when the personal property collateralizes the borrowing. See Rev. Proc. 72–18, § 3.03 (disallowing interest deduction for debt secured by tax-exempt obligations); Rev. Rul. 78–348 (1978–2 C.B. 95) (applying yield restrictions to investments pledged by person benefitting from tax-exempt bond financing).

A third allocation rule of the proposed regulations allocates interest on indebtedness to personal property when payments on the indebtedness are determined by reference to the value, or change in value, of the personal property that is part of a straddle.

Fees and charges related to the maintenance of the personal property, such as charges to insure, store, or transport the personal property, are allocated to the capital account of that personal property. See S. Rep. No. 144, 97th Cong. 1st Sess. 154 (1981).

In other cases, the appropriate method for allocating capitalized interest and carrying charges is less obvious. This may be true of payments or accruals on a financial instrument, such as a NPC, described in proposed § 1.263(g)–3(d).

For example, the proposed rules would apply to a taxpayer that holds stock and enters into an equity swap that is a short position with respect to the stock. In such a case, both the stock and the equity swap may be personal property that is part of a straddle, and payments on the equity swap could be capitalized with respect to the capital account of either the stock or the equity swap. However, it may not be clear how a capitalization rule would apply in conjunction with the rules under § 1.446–3 with respect to payments on NPCs. Accordingly, the proposed rules provide that, in cases to which a specific allocation rule is not applicable, interest and carrying charges will be allocated to personal property that is part of a straddle in the manner that is most appropriate under all the facts and circumstances. Proposed regulations § 1.263(g)–4(c) *Example 7* (relating to a straddle consisting of stock and an equity swap) illustrate one application of this facts and circumstances rule. The Treasury Department and the IRS invite comments and suggestions regarding both the proposed specific allocation rules and the general facts and circumstances allocation rule.

The regulations under section 263(g) are proposed to be effective for expenses paid, incurred, or accrued after the date the regulations are adopted as final for straddles established on or after January 17, 2001. See § 1.263(g)–5.

Obligation Under a Debt Instrument as a Position in Personal Property

If a taxpayer is the obligor under a debt instrument that provides for one or more payments linked to the value of actively traded personal property, the value of the taxpayer's obligation under the debt instrument changes as the value of the referenced property changes. For this reason, the taxpayer's position as obligor under the debt instrument functions as a position in the referenced property.

Some commentators have suggested that a debt instrument (other than one denominated in an actively traded foreign currency) cannot be a position of the obligor in personal property that is part of a straddle. Section 1092(d)(7) provides that an obligor's interest in a nonfunctional-currency-denominated debt instrument is treated under section 1092(d)(2) as a position in the nonfunctional currency. From this, the commentators infer that an obligor's interest in a debt instrument may never be treated as an interest in personal property other than a nonfunctional currency.

However, neither the legislative history nor the express language of section 1092(d)(7) indicates that Congress intended to exclude interests in personal property from the definition of *position* in section 1092(d)(2). A rule that a debt instrument can be a position in currency does not establish that a debt instrument is a position only in currency. This interpretation of section 1092(d)(7) has already been rejected by the IRS and Treasury in § 1.1275–4(b)(9)(vi), which provides that increased interest expense on a contingent payment debt instrument issued by a taxpayer may be a straddle loss subject to section 1092 deferral.

To clarify the definition of *position* under section 1092(d)(2), § 1.1092(d)–1(d) of the proposed regulations explicitly provides that an obligation under a debt instrument may be a position in personal property that is part of a straddle. This provision is proposed to be effective for straddles established on or after January 17, 2001. However, no inference is intended with respect to straddles established prior to Janaury 17, 2001. Thus, in appropriate cases, the IRS may take the position under section 1092(d)(2) that, even in the absence of a regulation, an obligation under a debt instrument was part of a straddle prior to the effective date of § 1.1092(d)–1(d) if the debt instrument functioned economically as an interest in actively traded personal property.

In 1995, the IRS published proposed regulation § 1.1092(d)–(2). See 60 F.R. 21482; FI–21–95, 1995–1 C.B. 935. The proposed regulations clarify the circumstances in which common stock may be personal property for the purposes of section 1092. Because proposed regulation §§ 1.1092(d)–2 and 1.1092(d)–1(d) address similar issues, the IRS proposes to finalize both regulations simultaneously. The Treasury Department and the IRS, therefore, invite additional comment on proposed § 1.1092(d)–(2).

In addition, in 1985, the Treasury Department and the IRS adopted Temporary Regulation § 1.1092(d)–5T(d), which defines the term *loss* for purposes of §§ 1.1092(b)–1T through 1.1092(b)–4T as a loss otherwise allowable under section 165(a). The Treasury Department and the IRS request comments on whether that definition should be expanded to include expenses such as interest and carrying charges or payments on notional principal contracts. If so, how should such a change be coordinated with the proposed regulations in this document?

Special Analyses

It has been determined that this notice of proposed rulemaking is not a significant regulatory action as defined in Executive Order 12866. Therefore, a regulatory assessment is not required. It also has been determined that section 553(b) of the Administrative Procedure Act (5 U.S.C. chapter 5) does not apply to these regulations, and because the regulation does not impose a collection of information on small entities, the Regulatory Flexibility Act (5 U.S.C. chapter 6) does not apply. Pursuant to section 7805(f) of the Internal Revenue Code, this notice of proposed rulemaking will be submitted to the Chief Counsel for Advocacy of the Small Business Administration for comment on its impact on small business.

Comments and Public Hearing

Before these proposed regulations are adopted as final regulations, consideration will be given to any written or electronic comments (a signed original and eight (8) copies, if written) that are submitted timely (in the manner described in the **ADDRESSES** portion of this preamble) to the IRS. The IRS and Treasury request comments on the clarity of the proposed regulations and how they may be made easier to understand. All comments will be available for public inspection and copying.

A public hearing has been scheduled for May 22, 2001, at 10 a.m. in the Auditorium, Internal Revenue Building, 1111 Constitution Avenue NW., Washington DC. Due to building security procedures, visitors must enter at the 10th Street entrance located between Constitution and Pennsylvania Avenues, NW. In addition, all visitors must present photo identifications to enter the building. Because of access restrictions, visitors will not be admitted beyond the immediate entrance area more than 15 minutes before the hearing starts. For information about having your name placed on the building access list to attend the hearing, see the **FOR FURTHER INFORMATION CONTACT** section of this preamble.

The rules of 26 CFR 601.601(a)(3) apply to the hearing. Persons who wish to present oral comments at the hearing must submit and an outline of the topics to be discussed and the time to be devoted to each topic (signed original and eight (8) copies) by May 1, 2001. A period of 10 minutes will be allotted to each person for making comments. An agenda showing the scheduling of the speakers will be prepared after the deadline for receiving outlines has passed. Copies of the agenda will be available free of charge at the hearing.

Drafting Information

The principal author of these regulations is Kenneth Christman, Office of Associate Chief Counsel (Financial Institutions and Products). However, other personnel from the IRS and Treasury Department participated in their development.

List of Subjects in 26 CFR Part 1

Income taxes, Reporting and recordkeeping requirements.

Proposed Amendments to the Regulations

Accordingly, 26 CFR part 1 is proposed to be amended as follows:

PART 1—INCOME TAXES

Paragraph 1. The authority citation for part 1 is amended by adding entries in numerical order to read as follows:

Authority: 26 U.S.C. 7805 * * *

Section 1.263(g)–1 also issued under 26 U.S.C. 1092(b)(1).

Section 1.263(g)–2 also issued under 26 U.S.C. 1092(b)(1).

Section 1.263(g)–3 also issued under 26 U.S.C. 1092(b)(1).

Section 1.263(g)–4 also issued under 26 U.S.C. 1092(b)(1).

Section 1.263(g)–5 also issued under 26 U.S.C. 1092(b)(1). * * *

Section 1.1092(d)–1 also issued under 26 U.S.C. 1092(b)(1).

Par. 2. Sections 1.263(g)–1, 1.263(g)–2, 1.263(g)–3, 1.263(g)–4, and 1.263(g)–5 are added to read as follows:

§ 1.263(g)–1 Treatment of interest and carrying charges in the case of straddles; in general.

(a) Under section 263(g), no deduction is allowed for interest and carrying charges allocable to personal property that is part of a straddle (as defined in section 1092(c)). The purpose of section 263(g) is to coordinate the character and the timing of items of income and loss attributable to a taxpayer's positions that are part of a straddle. In order to prevent payments or accruals related to a straddle transaction from giving rise to recognition of deductions or losses before related income is recognized and to prevent the items of loss and income from having different character, no deduction is allowed for interest and carrying charges properly allocable to personal property that is part of a straddle. Rather, such amounts are chargeable to the capital account of the personal property to which the interest and carrying charges are properly allocable.

(b) Section 263(g) does not apply if none of the taxpayer's positions that are part of the straddle are personal property. Section 263(g) also does not apply to hedging transactions as defined in section 1256(e) (see section 263(g)(3)) or to securities to which the mark-to-market accounting method provided by section 475 applies (see section 475(d)(1)).

(c) Section 1.263(g)–2 provides a definition of personal property for purposes of section 263(g) and §§ 1.263(g)–1 through 1.263(g)–5. Section 1.263(g)–3 provides a definition of interest and carrying charges for purposes of section 263(g), section 1092, §§ 1.263(g)–1 through 1.263(g)–5, and § 1.1092(b)–4T. Section 1.263(g)–4 provides a set of allocation rules governing the capitalization of amounts to which section 263(g) applies.

§ 1.263(g)–2 Personal property to which interest and carrying charges may properly be allocable.

(a) *Definition of personal property.* For purposes of section 263(g) and of §§ 1.263(g)–1 through 1.263(g)–5, *personal property* means property, whether or not actively traded, that is not real property. For purposes of the preceding sentence, a position in personal property may itself be property. In general, however, a position in personal property is not property of a taxpayer unless the position confers or may confer substantial rights on the taxpayer.

(1) *Application to certain financial instruments.* Personal property includes a stockholder's ownership of common stock, a holder's ownership of a debt instrument, and either party's position in a forward contract or in a conventional swap agreement. Personal property does not include a position that imposes obligations but does not confer substantial rights on the taxpayer. Therefore, the obligor's position in a debt instrument generally is not personal property, even though the obligor may have typical rights of a debtor, such as the right to prepay the debt. However, the obligor on a debt instrument has a position in any personal property underlying the debt instrument. See § 1.1092(d)–1(d).

(2) *Options.* For the purposes of applying this section, a put option or call option imposes obligations but does not confer substantial rights on the grantor, whether or not the option is cash-settled.

(b) Example. The following example illustrates the rules stated in paragraph (a) of this section:

Example. (i) *Facts. A* purchases 100 ounces of gold at a cost of $*x*. *A* transfers the 100 ounces of gold to a trust that issues multiple classes of trust certificates and is treated as a partnership for tax purposes. In return, *A* receives two trust certificates that are not personal property of a type that is actively traded within the meaning of section 1092(d)(1). One certificate entitles *A* to a payment on termination of the trust at the end of four years equal to the value of the 100 ounces of gold up to a maximum value of $($x + y$). The other certificate entitles *A* to a payment equal to the amount by which the value of 100 ounces of gold exceeds $($x + y$) on termination of the trust. *A* sells the second certificate and keeps the first certificate.

(ii) *Analysis.* The trust certificate retained by *A* is property that is not real property. In addition, ownership of the trust certificate confers certain substantial rights on *A*. Therefore, although the trust certificate is not personal property of a type that is actively traded, *A*'s interest in the trust certificate is personal property for purposes of section 263(g).

§ 1.263(g)–3 Interest and carrying charges properly allocable to personal property that is part of a straddle.

(a) *In general.* For purposes of section 263(g), section 1092, §§ 1.263(g)–1 through 1.263(g)–5, and § 1.1092(b)–4T, *interest and carrying charges properly allocable to personal property that is part of a straddle* means the excess of interest and carrying charges (as defined in paragraph (b) of this section) over the allowable income offsets (as defined in paragraph (e) of this section).

(b) *Interest and carrying charges.* Interest and carrying charges are otherwise deductible amounts paid or accrued with respect to indebtedness or other financing incurred or continued to purchase or carry personal property that is part of a straddle and otherwise deductible amounts paid or incurred to carry personal property that is part of a straddle. As provided in section 263(g)(2), interest includes any amount paid or incurred in connection with personal property used in a short sale. Interest and carrying charges include—

(1) Otherwise deductible payments or accruals (including interest and original issue discount) on indebtedness or other financing issued or continued to purchase or carry personal property that is part of a straddle;

(2) Otherwise deductible fees or expenses paid or incurred in connection with acquiring or holding personal property that is part of a straddle including, but not limited to, fees or expenses incurred to purchase, insure, store, maintain or transport the personal property; and

(3) Other otherwise deductible payments or accruals on financial instruments that are part of a straddle or that carry part of a straddle.

(c) *Indebtedness or other financing incurred or continued to purchase or carry personal property that is part of a*

straddle. For purposes of paragraph (b)(1) of this section, indebtedness or other financing that is incurred or continued to purchase or carry personal property that is part of a straddle includes—

(1) Indebtedness or other financing the proceeds of which are used directly or indirectly to purchase or carry personal property that is part of the straddle;

(2) Indebtedness or other financing that is secured directly or indirectly by personal property that is part of the straddle; and

(3) Indebtedness or other financing the payments on which are determined by reference to payments with respect to the personal property or the value of, or change in value of, the personal property.

(d) *Financial instruments that are part of a straddle or that carry part of a straddle.* For purposes of paragraph (b)(3), financial instruments that are part of a straddle or that carry part of a straddle include—

(1) A financial instrument that is part of the straddle;

(2) A financial instrument that is issued in connection with the creation or acquisition of a position in personal property if that position is part of the straddle;

(3) A financial instrument that is sold or marketed as part of an arrangement that involves a taxpayer's position in personal property that is part of the straddle and that is purported to result in either economic realization of all or part of the appreciation in an asset without simultaneous recognition of taxable income or a current tax deduction (for interest, carrying charges, payments on a notional principal contract, or otherwise) reflecting a payment or expense that is economically offset by an increase in value that is not concurrently recognized for tax purposes or has a different tax character (for example, an interest payment that is economically offset by an increase in value that may result in a capital gain in a later tax period); and

(4) Any other financial instrument if the totality of the facts and circumstances support a reasonable inference that the issuance, purchase, or continuation of the financial instrument by the taxpayer was intended to purchase or carry personal property that is part of the straddle.

(e) *Allowable income offsets.* The allowable income offsets are:

(1) The amount of interest (including original issue discount) includible in gross income for the taxable year with respect to such personal property;

(2) Any amount treated as ordinary income under section 1271(a)(3)(A), 1278, or 1281(a) with respect to such personal property for the taxable year;

(3) The excess of any dividends includible in gross income with respect to such property for the taxable year over the amount of any deductions allowable with respect to such dividends under section 243, 244, or 245;

(4) Any amount that is a payment with respect to a security loan (within the meaning of section 512(a)(5)) includible in income with respect to the personal property for the taxable year; and

(5) Any amount that is a receipt or accrual includible in income for the taxable year with respect to a financial instrument described in § 1.263(g)–3(d) to the extent the financial instrument is entered into to purchase or carry the personal property.

§ 1.263(g)–4 Rules for allocating amounts to personal property that is part of a straddle.

(a) *Allocation rules.* (1) Interest and carrying charges paid or accrued on indebtedness or other financing issued or continued to purchase or carry personal property that is part of a straddle are allocated, in the order listed—

(i) To personal property that is part of the straddle purchased, directly or indirectly, with the proceeds of the indebtedness or other financing;

(ii) To personal property that is part of the straddle and directly or indirectly secures the indebtedness or other financing; or

(iii) If all or a portion of such interest and carrying charges are determined by reference to the value or change in value of personal property, to such personal property.

(2) Fees and expenses described in § 1.263(g)–3(b)(2) are allocated to the personal property, the acquisition or holding of which resulted in the fees and expenses being paid or incurred.

(3) In all other cases, interest and carrying charges are allocated to personal property that is part of a straddle in the manner that under all the facts and circumstances is most appropriate.

(b) *Coordination with other provisions.* In the case of a short sale, section 263(g) applies after section 263(h). See sections 263(g)(4)(A) and (h)(6). In case of an obligation to which section 1277 (dealing with deferral of interest deduction allocable to accrued market discount) or 1282 (dealing with deferral of interest deduction allocable to certain accruals on short-term indebtedness) applies, section 263(g) applies after section 1277 and section 1282. See section 263(g)(4)(B). Capitalization under section 263(g) applies before loss deferral under section 1092.

(c) *Examples.* The following examples illustrate the rules stated in §§ 1.263(g)–2, 1.263(g)–3, and 1.263(g)–4.

Example 1. Cash and Carry Silver.

(i) *Facts.* On January 1, 2002, *A* borrows $*x* at 6% interest and uses the proceeds to purchase *y* ounces of silver from *B*. At approximately the same time, *A* enters into a forward contract with *C* to deliver *y* ounces of silver to *C* in one year.

(ii) *Analysis.* The *y* ounces of silver and the forward contract to deliver *y* ounces of silver in one year are offsetting positions with respect to the same personal property and therefore constitute a straddle. See sections 1092(c)(1), (c)(3)(A)(i). The proceeds of the debt instrument were used to purchase personal property that is part of the straddle. Consequently, *A*'s interest payments are interest and carrying charges properly allocable to personal property that is part of a straddle. See § 1.263(g)–3(b)(1) & (c)(1). Under § 1.263(g)–4(a)(1)(i), the interest payments must be charged to the capital account for the *y* ounces of silver purchased by *A* with the proceeds of the borrowing.

Example 2. Additional indebtedness issued to carry personal property.

(i) *Facts.* The facts are the same as for Example 1 except that during the year 2002, the market price of silver increases and *A* is required to post variation margin as security for its obligation to deliver *y* ounces of silver to *C*. *A* incurs additional indebtedness to obtain funds necessary to meet *A*'s variation margin requirement.

(ii) *Analysis.* The additional indebtedness is incurred to continue to carry *A*'s holding of *z* ounces of silver. Consequently, *A*'s interest payments on the additional indebtedness are interest and carrying charges properly allocable to personal property that is part of a straddle and must be charged to the capital account for the *y* ounces of silver.

Example 3. Contingent payment debt instrument.

(i) *Facts.* On January 1, 2002, *D* enters into a contract to deliver *x* barrels of fuel oil to *E* on July 1, 2004, at an aggregate price equal to $*y*. Soon afterward, *D* issues a contingent payment debt instrument to *F* with a principal amount of $*z* and a 2-year term that pays interest quarterly at a rate determined at the beginning of each quarter equal to the greater of zero and the London Interbank Offered Rate (LIBOR) adjusted by an index that varies inversely with changes in the price of fuel oil (so that the interest rate increases as the price of fuel oil decreases and vice versa). The change in the aggregate amount of interest paid on the $*z* of debt due to the functioning of the index approximates the concurrent aggregate change in value of *x* barrels of fuel oil and, thus, the value of *D*'s interest in the forward contract.

(ii) *Analysis.* The debt instrument and the forward contract are offsetting positions with respect to the same personal property and

constitute a straddle. See section 1092(c)(1), (c)(3)(A)(i). When issued, the debt instrument is a position in personal property that is part of a straddle. See § 1.1092(d)–1(d). Consequently, *D*'s interest payments are interest and carrying charges properly allocable to personal property that is part of a straddle and must be allocated to the capital account for the forward contract for the delivery of *x* barrels of fuel oil to *E*. See §§ 1.263(g)–3(b)(1), (b)(3), (c)(3), and (d)(1) and -4(a)(1)(iii).

Example 4. Financial instrument issued to carry personal property that is part of a straddle. (i) *Facts.* The facts are the same as for Example 3 except that *D* also enters into a two-year interest rate swap under which *D* receives LIBOR times a notional principal amount equal to $*z* and pays 7% times $*z*.

(ii) *Analysis.* Because of the relationship between the two-year debt instrument issued by *D* and the interest rate swap, the interest rate swap is a financial instrument that carries personal property that is part of a straddle. See § 1.263(g)–3(d)(4). Net payments made by *D* under the interest rate swap are chargeable to the capital account for the forward contract for the delivery of *x* barrels of fuel oil to *E*. Similarly, net payments received by *D* under the interest rate swap are allowable offsets. See § 1.263(g)–3(e)(5).

Example 5. Contingent payment debt instrument with embedded short position.

(i) *Facts.* On January 1, 1998, G purchases 100,000 shares of the common stock of *XYZ* corporation (which is publicly traded). On January 1, 2002, the 100,000 shares of *XYZ* corporation common stock were worth $*x* per share. On that date, *G* issued a contingent payment debt instrument for $100,000*x*. The terms of the debt instrument provided that the holder would receive an annual payment of $2,000*x* on December 31 of each year up to and including the maturity date of December 31, 2007. On the maturity date, the holders would also receive a payment of $100,000*x* plus an additional amount, if the price of an *XYZ* share exceeded $1.2*x* on such date, equal to 100,000 times three-quarters of the amount of such excess per share. Thus, *G*'s aggregate payments on the debt instrument varied directly with the increase in value in the *XYZ* shares.

(ii) *Analysis.* The debt instrument is a position in *XYZ* stock. See § 1.1092(d)–1(d). The *XYZ* stock is personal property within the meaning of section 1092(d)(3)(B) because the debt instrument is a position with respect to substantially similar or related property (other than stock) within the meaning of section 1092(d)(3)(B)(i)(II). See § 1.1092(d)–2(c). The debt instrument and the *XYZ* shares are offsetting positions with respect to the same personal property and constitute a straddle. See sections 1092(c)(1), (c)(3)(A)(i). Consequently, *G*'s interest payments are interest and carrying charges properly allocable to personal property that is part of a straddle, see §§ 1.263(g)–3(b)(1), (b)(3), (c)(3), and (d)(1), and must be allocated to the capital account for the *XYZ* common stock, see § 1.263(g)–4(a)(1)(iii) and (a)(3).

Example 6. Straddle including partnership interest.

(i) *Facts.* H borrows money from I to purchase 100 ounces of gold at a cost of $*u*. *H* transfers the 100 ounces of gold and $*v* to a newly created trust that issues multiple classes of trust certificates and is treated as a partnership for tax purposes. In return, *H* receives two trust certificates. One certificate entitles the holder to a payment on termination of the trust at the end of four years equal to the value of the 100 ounces of gold up to a maximum value of $($u + w$). The other certificate entitles the holder to a payment equal to the amount by which the value of 100 ounces of gold exceeds $($u + w$) on termination of the trust. *H* sells the second certificate and keeps the first certificate. *H* also enters into a forward contract to sell 100 ounces of gold for $1.12*u* per ounce on a date two years after creation of the trust. The trust uses part of the $*v* and similar cash contributions from other investors to pay costs of storing the gold held by the trust and allocates *H*'s share of the expenses to *H*.

(ii) *Analysis.* The trust certificate retained by *H* and the forward contract entered into by *H* are personal property for the purposes of section 263(g). See § 1.263(g)–2(a). They are also offsetting positions and constitute a straddle. Section 1092(c)(1). The borrowing from *I* is an indebtedness incurred to purchase personal property that is part of a straddle. See §§ 1.263(g)–3(b)(1) and (c)(1). Similarly, the gold storage expenses are expenses incurred due to the taxpayer's holding personal property that is part of a straddle. See § 1.263(g)–3(b)(2). Therefore both the interest on the borrowing and the gold storage expenses must be allocated to the capital account for the partnership interest represented by the retained trust certificate. See § 1.263(g)–4(a)(1)(i) and (a)(2).

Example 7. Equity Swap.

(i) *Facts.* On January 1, 1998, *J* purchases 100,000 shares of the common stock of *XYZ* corporation (which is publicly traded). On December 31, 2001, the 100,000 shares of *XYZ* corporation common stock were worth $*x* per share. On that date, *J* entered into a NPC with *K*. The terms of the NPC provided that *K* would receive an annual payment on December 31 of each year equal to 100,000 times any appreciation in the value of a share of *XYZ* corporation stock above its price at the end of trading on December 31 of the preceding year and 100,000 times the dividends paid during the year on each share of *XYZ* corporation stock. In return, on December 31 of each year, *J* would receive an amount equal to LIBOR times the value of 100,000 XYZ shares at the end of trading on December 31 of the preceding year plus 100,000 times the amount of any decrease in the value of a share of *XYZ* corporation stock below its price at the end of trading on December 31 of the preceding year. Payments between *J* and *K* would be netted and continue up to and including the maturity date of the NPC on December 31, 2008. Thus, *J*'s aggregate payments on the NPC varied directly with the increase in value in the *XYZ* shares.

(ii) *Analysis.* The NPC is a position in *XYZ* stock. See § 1.1092(d)–2(c). The *XYZ* stock is personal property within the meaning of section 1092(d)(3)(B) because the NPC is a position with respect to substantially similar or related property (other than stock) within the meaning of section 1092(b)(3)(B)(i)(II). See § 1.1092(d)–2(a)(1)(ii). The NPC and the *XYZ* shares are offsetting positions with respect to the same personal property and constitute a straddle. See sections 1092(c)(1), (c)(3)(A)(i). Consequently, *J*'s payments are interest and carrying charges properly allocable to personal property that is part of a straddle. See §§ 1.263(g)–3(b)(3) and (d)(1). Therefore, they should be allocated to the personal property that is part of the straddle in the manner that is most appropriate under all the facts and circumstances. In this case, because these payments are incurred to carry the *XYZ* shares, they should be allocated to the capital account for the *XYZ* common stock. See § 1.263(g)–4(a)(3).

§ 1.263(g)–5 Effective dates.

Sections 1.263(g)–1, 1.263(g)–2, 1.263(g)–3, and 1.263(g)–4 apply to interest and carrying charges properly allocable to personal property that are paid, incurred, or accrued after the date these regulations are adopted as final regulations by publication in the **Federal Register** for a straddle established on or after January 17, 2001.

Par. 3. Section 1.1092(d)–1 is amended by revising paragraph (d) and adding paragraph (e), to read as follows:

§ 1.1092(d)–1 Definitions and special rules.

* * * * *

(d) *Debt instrument linked to the value of personal property.* If a taxpayer is the obligor under a debt instrument one or more payments on which are linked to the value of personal property or a position with respect to personal property, then the taxpayer's obligation under the debt instrument is a position with respect to personal property and may be part of a straddle.

(e) *Effective dates.* Paragraph (b)(1)(vii) of this section applies to positions entered into on or after October 14, 1993. Paragraph (c) of this section applies to positions entered into on or after July 8, 1991. Paragraph (d) of this section is effective for straddles established on or after January 17, 2001.

Robert E. Wenzel,

Deputy Commissioner of Internal Revenue.

[FR Doc. 01–1240 Filed 1–17–01; 8:45 am]

BILLING CODE 4830–01–P

DEPARTMENT OF TREASURY

Internal Revenue Service

26 CFR Part 1

[REG–115560–99]

RIN 1545–AX66

Equity Options With Flexible Terms; Qualified Covered Call Treatment

AGENCY: Internal Revenue Service (IRS), Treasury.

ACTION: Notice of proposed rulemaking and notice of public hearing.

SUMMARY: This document contains proposed regulations providing guidance on the application of the rules governing qualified covered calls. The new rules address concerns that were created by the introduction of new financial instruments several years after the enactment of the qualified covered call rules. The proposed regulations would provide guidance to taxpayers writing equity call options. This document also provides notice of public hearing on these proposed regulations.

DATES: Written and electronic comments and requests to appear and outlines of topics to be discussed at the public hearing scheduled for May 9, 2001, at 10 a.m., must be submitted by April 18, 2001.

ADDRESSES: Send submissions to: CC:M&SP:RU (REG–115560–99), room 5226, Internal Revenue Service, POB 7604, Ben Franklin Station, Washington, DC 20044. Submissions may be hand delivered between the hours of 8 a.m. and 5 p.m. to: CC:M&SP:RU (REG–115560–99), Courier's Desk, Internal Revenue Service, 1111 Constitution Avenue NW., Washington, DC. Alternatively, taxpayers may submit comments electronically via the Internet by selecting the ''Tax Regs'' option of the IRS Home Page, or by submitting comments directly to the IRS Internet site at http://www.irs.gov/tax_regs/regslist.html. The public hearing will be held in the IRS Auditorium, Internal Revenue Building, 1111 Constitution Avenue, NW., Washington, DC.

FOR FURTHER INFORMATION CONTACT: Concerning the regulations, Pamela Lew, (202) 622–3950; concerning submissions and the hearing, Guy Traynor, (202) 622–7180, (not toll-free numbers).

SUPPLEMENTARY INFORMATION:

Background

On June 25, 1998, the IRS published in the **Federal Register** proposed regulations (REG–104641–97, 63 FR 34616) addressing whether strike prices available for equity options with flexible terms affect the definition of a qualified covered call (QCC) under section 1092(c)(4) for equity options with standardized terms. No requests to speak at a public hearing were received, and no public hearing was held.

The proposed regulations provided that strike prices available for equity options with flexible terms do not affect the bench marks used to determine whether equity options with standardized terms are eligible for QCC treatment. That provision was adopted as § 1.1092(c)–1 of the final regulations (TD 8866), published in the **Federal Register** for January 25, 2000 (65 FR 3812).

The regulatory text of REG–104641–97 did not address whether an equity option with flexible terms is itself eligible for QCC treatment. The preamble to the proposed regulations, however, did request comments about whether equity options with flexible terms should be eligible for QCC treatment and, if eligible, what bench marks should apply. In light of the comments received, consideration was also given to the treatment of over-the-counter options and standardized options with terms of more than one year. After consideration of the written comments, this NPRM proposes regulations addressing the eligibility for QCC treatment of equity options with flexible terms, over-the-counter options and standardized options with terms longer than one year.

QCC Treatment

Section 1092(c) defines a straddle as offsetting positions with respect to personal property. Under section 1092(d)(3)(B)(i)(I), stock is personal property if the stock is part of a straddle that involves an option on that stock or substantially identical stock or securities. Under section 1092(c)(4), however, writing a QCC option and owning the optioned stock is not treated as a straddle under section 1092 if certain conditions are satisfied.

The legislative history of section 1092 indicates that QCCs were excepted from the loss deferral rule for straddles because ''they are undertaken primarily to enhance the taxpayer's investment return on the stock and not to reduce the taxpayer's risk of loss on the stock.'' H.R. Rep. No. 432, 98th Cong., 2d Sess. at 1266–68 (1983). To qualify as a QCC, a covered call must, among other things, be exchange traded and not be deep in the money. An option is exchange traded if the option is traded on a national securities exchange that is registered with the Securities and Exchange Commission or on some other market that the Secretary determines has rules adequate to carry out the purposes of the QCC provisions. An option is deep in the money if the strike price of the option is lower than the lowest qualified bench mark for the stock at the time the option is written.

Section 1092(c)(4)(H) grants the Secretary of the Treasury the authority to prescribe regulations to carry out the purposes of the QCC exception, including regulations modifying the provisions of the exception as appropriate to take account of changes in the practices of options exchanges.

The introduction of exchange-traded equity options with flexible terms is one such change. Unlike equity options with standardized terms, equity options with flexible terms can have strike prices at other than fixed intervals and have other than standardized expiration dates. Options exchanges have also introduced standardized options with longer terms.

In response to the request for comments, two comments were received. One commentator argued that equity options with flexible terms should not be eligible for QCC treatment. This commentator noted that in 1984, when section 1092(c)(4) was enacted, only equity options with standardized terms were traded on the national exchanges and that it is likely that Congress did not intend to include customizable options within the definition of a QCC. This commentator also pointed out that equity options with flexible terms were developed to compete with over-the-counter (OTC) options, which are not eligible for QCC treatment. The commentator suggested that excluding equity options with flexible terms from QCC treatment would avoid a competitive imbalance from different tax treatment for competing products.

The second commentator stated that, as a matter of statutory analysis, equity options with flexible terms are already eligible for QCC treatment. This commentator argued that QCC treatment is appropriate if the taxpayer is using the option to increase the yield on its stock investment and not to reduce the risk of loss on its stock. In support of this point, the commentator noted that nothing in the applicable legislative history suggests that Congress intended to limit the QCC option exception to standardized options. Alternatively, this commentator argued that because equity options with flexible terms were designed to compete with OTC options, regulations should be promulgated allowing OTC options to qualify for QCC treatment on the same terms as exchange-traded equity options with flexible terms.

Explanation of Provisions

Equity Options With Flexible Terms and Qualifying OTC Options

After consideration of the comments received, the proposed regulations provide that equity options with flexible terms may be QCC options as long as they satisfy the general rules for QCC treatment described in section 1092(c)(4), are not for a term of longer

than one year, and meet other specified requirements. In addition, an equity option with standardized terms must be outstanding for the underlying equity. For purposes of applying the general rules, the bench marks will be the same as those for an equity option with standardized terms on the same stock having the same applicable stock price.

The proposed regulations also provide that certain OTC options may be QCC options so that OTC options that are economically similar to equity options with flexible terms may enjoy the same tax benefits as equity options with flexible terms. Specifically, the proposed regulations provide that an OTC option is eligible for QCC treatment if it is entered into with a person registered with the Securities and Exchange Commission as a broker-dealer or alternative trading system and meets the same requirements for QCC treatment that apply to equity options with flexible terms.

QCC Status for Equity Options With Standardized Terms

In the process of considering the proper treatment for equity options with flexible terms, the IRS examined QCC status in general. At the time that Congress enacted section 1092(c)(4), options available on the national securities exchanges had a term of nine months or less. Congress did not include in the legislative history any guidance on the effect of the time value of money upon the strike price.

Subsequent to the enactment of section 1092(c)(4), the national securities exchanges began offering certain standardized options with expiration dates that are 12 or more months after the date entered into. The longer term of these options may reduce the taxpayer's risk of loss on its stock position because of the time period involved.

Increased risk reduction through the use of long term options applies equally to equity options with flexible terms, OTC options, and equity options with standardized terms. The proposed regulations therefore provide that a one-year term limit also applies to equity options with standardized terms. Comments are requested on this issue, including a discussion of time limitations in general, as well as the appropriateness of a one-year cutoff.

If QCC treatment should apply to longer-term options, it may be appropriate to change the deep-in-the-money standard to prevent the increase in risk reduction. A comment recommending a time limitation greater than one year or recommending that there be no time limitation should also provide detailed, comprehensive descriptions of possible solutions to the problem of increased risk reduction. Comments should also address the administrability of any proposed solutions.

Proposed Effective Date

These regulations would apply to options entered into on or after 30 days after the date that the Treasury decision adopting these rules as final regulations is published in the **Federal Register**.

Regulations concerning time limitations for equity options with standardized terms would be prospective in nature and would apply to transactions entered into on or after 90 days from the date of publication of the final regulation promulgating such rules.

Special Analyses

It has been determined that this notice of proposed rulemaking is not a significant regulatory action as defined in Executive Order 12866. Therefore, a regulatory assessment is not required. It is hereby certified that these regulations will not have a significant economic impact on a substantial number of small entities. This certification is based upon the fact that these regulations do not impose any recordkeeping or reporting requirements and therefore impose minimal compliance costs, if any, upon any small entities that may be affected. Because equity options with standardized terms will not be eligible for QCC treatment if such options have a duration of more than 1 year, some taxpayers may lose substantive tax benefits. This certification is further based upon the understanding that such taxpayers will not include a substantial number of small entities. Comments are specifically requested on the question of whether a substantial number of small entities (as opposed to large entities or individual investors) will suffer a significant economic impact under these regulations. Therefore, a Regulatory Flexibility Analysis under the Regulatory Flexibility Act (5 U.S.C. chapter 6) is not required. Pursuant to section 7805(f) of the Internal Revenue Code, this notice of proposed rulemaking will be submitted to the Chief Counsel for Advocacy of the Small Business Administration for comment on its impact on small business.

Comments and Public Hearing

Before these proposed regulations are adopted as final regulations, consideration will be given to any written or electronic comments (a signed original and eight (8) copies, if written) that are submitted timely (in the manner described in the **ADDRESSES** portion of this preamble) to the IRS. The IRS and Treasury request comments on the clarity of the proposed regulations and how they may be made easier to understand. All comments will be available for public inspection and copying.

A public hearing has been scheduled for May 9, 2001, at 10 a.m., in the IRS Auditorium, Internal Revenue Building, 1111 Constitution Avenue NW., Washington DC. Due to building security procedures, visitors must enter at the 10th Street entrance located between Constitution and Pennsylvania Avenues, NW. In addition, all visitors must present photo identifications to enter the building. Because of access restrictions, visitors will not be admitted beyond the immediate entrance area more than 15 minutes before the hearing starts. For information about having your name placed on the building access list to attend the hearing, see the **FOR FURTHER INFORMATION CONTACT** section of this preamble.

The rules of 26 CFR 601.601(a)(3) apply to the hearing. Persons who wish to present oral comments at the hearing must submit written comments and an outline of the topics to be discussed and the time to be devoted to each topic (signed original and eight (8) copies) by April 18, 2001. A period of 10 minutes will be allotted to each person for making comments. An agenda showing the scheduling of the speakers will be prepared after the deadline for receiving outlines has passed. Copies of the agenda will be available free of charge at the hearing.

Drafting Information

The principal author of these regulations is Pamela Lew, Office of Associate Chief Counsel (Financial Institutions and Products). However, other personnel from the IRS and Treasury Department participated in their development.

List of Subjects in 26 CFR Part 1

Income taxes, Reporting and recordkeeping requirements.

Proposed Amendments to the Regulations

Accordingly, 26 CFR part 1 is proposed to be amended as follows:

PART 1—INCOME TAXES

Paragraph 1. The authority citation for part 1 is amended by adding entries in numerical order to read as follows:

Authority: 26 U.S.C. 7805 * * *

Section 1.1092(c)–2 also issued under 26 U.S.C.1092(c)(4)(H).

Section 1.1092(c)–3 also issued under 26 U.S.C. 1092(c)(4)(H).* * *

Par. 2. Section 1.1092(c)–1 is amended as follows:

1. Paragraphs (b) and (d)(1)(ii) introductory text are revised.

2. Paragraphs (c) and (d)(3) are added.

3. Paragraph (e) is revised.

The revisions and addition read as follows:

§ 1.1092(c)–1 Equity options with flexible terms.

* * * * *

(b) *No effect on lowest qualified bench mark for standardized options.* The availability of strike prices for equity options with flexible terms does not affect the determination of the lowest qualified bench mark, as defined in section 1092(c)(4)(D), for an equity option with standardized terms.

(c) *Qualified covered call option status*—(1) *Requirements.* An equity option with flexible terms is a qualified covered call option only if—

(i) The option meets the requirements of section 1092(c)(4)(B) (taking into account paragraph (c)(2) of this section);

(ii) The only payments permitted with respect to the option are a single fixed premium paid not later than 5 business days after the day on which the option is granted, and a single fixed strike price stated as a dollar amount that is payable entirely at (or within 5 business days of) exercise;

(iii) The option is granted not more than 1 year before the day on which the option expires; and

(iv) An equity option with standardized terms is outstanding for the underlying equity.

(2) *Lowest qualified bench mark*—(i) *In general.* For purposes of determining whether an equity option with flexible terms is deep in the money within the meaning of section 1092(c)(4)(C), the lowest qualified bench mark under section 1092(c)(4)(D) is the same for an equity option with flexible terms as the lowest qualified bench mark for an equity option with standardized terms on the same stock having the same applicable stock price.

(ii) *Example.* The following example illustrates the rules set out in paragraph (c)(2)(i) of this section:

Example. Taxpayer owns stock in Corporation X. Taxpayer writes an equity call option with flexible terms on Corporation X stock through a national securities exchange. The applicable stock price for Corporation X stock is $73.75. Using the bench marks for an equity option with standardized terms with an applicable stock price of $73.75, the highest available bench mark less than the applicable stock price is $70, and the second highest bench mark is $65. Therefore, an equity call option with flexible terms on Corporation X with a term of 90 days or less will not be deep in the money if the strike price is not less than $70. If the term is greater than 90 days, an equity call option with flexible terms on Corporation X will not be deep in the money if the strike price is not less than $65.

(d) * * *

(1) * * *

(ii) That is traded on any national securities exchange which is registered with the Securities and Exchange Commission (other than those described in the SEC Releases set forth in paragraph (d)(1)(i) of this section) and is—

* * * * *

(3) *Equity option with standardized terms* means an equity option that is traded on a national securities exchange registered with the Securities and Exchange Commission and that is not an equity option with flexible terms.

(e) *Effective date*—(1) *In general.* Except as provided in paragraph (e)(2) of this section, this section applies to equity options with flexible terms entered into on or after January 25, 2000.

(2) *Special effective date for paragraph (c).* Paragraph (c) of this section applies to equity options with flexible terms entered into on or after 30 days after the date that the Treasury decision adopting these regulations is published in the **Federal Register**.

Par. 3. Section 1.1092(c)–2 is added to read as follows:

§ 1.1092(c)–2 Equity options with standardized terms.

(a) *One-year limitation.* An equity option with standardized terms (as defined in § 1.1092(c)–1(d)(3)) is a qualified covered call only if—

(1) The option meets the requirements of section 1092(c)(4)(B); and

(2) The option is granted not more than 1 year before the day on which the option expires.

(b) *Effective date.* This section applies to equity options with standardized terms entered into on or after 90 days after the date that the Treasury decision adopting these regulations is published in the **Federal Register**.

Par. 4. Section 1.1092(c)–3 is added.

§ 1.1092(c)–3 Qualifying over-the-counter options.

(a) *In general.* Under section 1092(c)(4)(B)(i), an equity option is not a qualified covered call option unless it is traded on a national securities exchange which is registered with the Securities and Exchange Commission or other market which the Secretary determines has rules adequate to carry out the purposes of section 1092(c)(4). In accordance with section 1092(c)(4)(H), this requirement is modified as provided in paragraph (b) of this section.

(b) *Qualified covered call option status.* A qualifying over-the-counter option is a qualified covered call option if it meets the requirements of § 1.1092(c)–1(c) after substituting ''qualifying over-the-counter option'' for ''equity option with flexible terms''. For the purposes of this paragraph (b), a qualifying over the counter option is deemed to satisfy the requirements of section 1092(c)(4)(B)(i).

(c) *Qualifying over-the-counter option.* For the purposes of this section, *qualifying over-the-counter option* means an equity option that—

(1) Is not traded on a national securities exchange registered with the Securities and Exchange Commission; and

(2) Is entered into with a person registered with the Securities and Exchange Commission as—

(i) A broker-dealer under section 15 of the Securities Act of 1934 and the regulations thereunder; or

(ii) An alternative trading system under 17 CFR 242.300 *et seq.*

(d) *Effective date.* This section applies to qualifying over-the-counter options entered into on or after 30 days after the date that the Treasury decision adopting these regulations is published in the **Federal Register**.

Robert E. Wenzel,

Deputy Commissioner of Internal Revenue.

[FR Doc. 01–1294 Filed 1–17–01; 8:45 am]

BILLING CODE 4830–01–P

DEPARTMENT OF THE TREASURY

Internal Revenue Service

26 CFR Part 1

[REG–114998–99]

RIN 1545–AY71

Obligations of States and Political Subdivisions

AGENCY: Internal Revenue Service (IRS), Treasury.

ACTION: Partial withdrawal of notice of proposed rulemaking; notice of proposed rulemaking by cross-reference to temporary regulations; and notice of public hearing.

SUMMARY: This document withdraws portions of the notice of proposed rulemaking published in the **Federal Register** on January 22, 1998. In the

Rules and Regulations section of this issue of the **Federal Register**, the IRS is issuing temporary regulations that provide guidance to state and local governments that issue bonds for output facilities. The text of those temporary regulations also serves as the text of these proposed regulations. This document provides a notice of public hearing on these proposed regulations.

DATES: Written comments must be received by July 18, 2001. Outlines of topics to be discussed at the public hearing scheduled for July 24, 2001, at 10 a.m. must be received by July 3, 2001.

ADDRESSES: Send submissions to: CC:M&SP:RU (REG–114998–99), room 5226, Internal Revenue Service, POB 7604, Ben Franklin Station, Washington, DC 20044. Submissions may be hand delivered between the hours of 8 a.m. and 5 p.m. to: CC:M&SP:RU (REG–114998–99), courier's desk, Internal Revenue Service, 1111 Constitution Avenue NW., Washington, DC. Alternatively, taxpayers may submit comments electronically via the Internet by selecting the ''Tax Regs'' option on the IRS Home Page, or by submitting comments directly to the IRS Internet site at http://www.irs.gov/tax_regs/regslist.html. The public hearing will be held in the Auditorium, Internal Revenue Building, 1111 Constitution Avenue NW., Washington, DC.

FOR FURTHER INFORMATION CONTACT: Concerning the regulations, Rose M. Weber, (202) 622–3980; concerning submissions and the hearing, Treena Garrett, (202) 622–7190 (not toll-free numbers).

SUPPLEMENTARY INFORMATION:

Background

Proposed regulations (REG–110965–97) §§ 1.141–7, 1.141–8 and 1.141–15(f) through (i), published on January 22, 1998 (63 FR 3296), addressed the application of the private activity bond tests of section 141(b) (1) and (2) to output contracts for output facilities and the application of the $15 million limitation under section 141(b)(4) to output facility financings. These proposed sections are withdrawn.

Sections 1.141–7T, 1.141–8T and 1.141–15T published in the Rules and Regulations portion of this issue of the **Federal Register** are issued to provide guidance on certain aspects of the private activity bond restrictions under section 141 of the Internal Revenue Code.

The text of the temporary regulations also serves as the text of these proposed regulations. The preamble to the temporary regulations explains the temporary regulations.

Special Analyses

It has been determined that this notice of proposed rulemaking is not a significant regulatory action as defined in Executive Order 12866. Therefore, a regulatory assessment is not required. It has also been determined that section 553(b) of the Administrative Procedure Act (5 U.S.C. chapter 5) does not apply to these regulations, and because the regulations do not impose a collection of information on small entities, the Regulatory Flexibility Act (5 U.S.C. chapter 6) does not apply. Pursuant to section 7805(f) of the Internal Revenue Code, this notice of proposed rulemaking will be submitted to the Chief Counsel for Advocacy of the Small Business Administration for comment on its impact on small business.

Comments and Public Hearing

Before these proposed regulations are adopted as final regulations, consideration will be given to any written comments that are submitted timely (preferably a signed original and eight copies) to the IRS. All comments will be available for public inspection and copying.

A public hearing has been scheduled for July 24, 2001, at 10 a.m. in the Auditorium, Internal Revenue Building, 1111 Constitution Avenue, NW., Washington, DC. Because of access restrictions, visitors will not be admitted beyond the lobby more than 15 minutes before the hearing starts.

The rules of 26 CFR 601.601(a)(3) apply to the hearing.

Persons who wish to present oral comments at the hearing must submit written comments by July 18, 2001 and submit an outline of the topics to be discussed and the time to be devoted to each topic by July 3, 2001.

A period of 10 minutes will be allotted to each person for making comments.

An agenda showing the scheduling of the speakers will be prepared after the deadline for receiving outlines has passed. Copies of the agenda will be available free of charge at the hearing.

Drafting Information

The principal authors of these regulations are Bruce M. Serchuk, and Rose M. Weber, Office of Chief Counsel (Tax-exempt and Government Entities), Internal Revenue Service, and Stephen J. Watson, Office of Tax Legislative Counsel, Department of the Treasury. However, other personnel from the IRS and Treasury Department participated in their development.

Partial Withdrawal of Notice of Proposed Rulemaking

Under the authority of 26 U.S.C. 7805, §§ 1.141–7, 1.141–8 and 1.141–15(f) through (i) in the notice of proposed rulemaking that was published on January 22, 1998 (63 FR 3256) are withdrawn.

List of Subjects in 26 CFR Part 1

Income taxes, Reporting and recordkeeping requirements.

Proposed Amendments to the Regulations

Accordingly, 26 CFR part 1 is proposed to be amended as follows:

PART 1—INCOME TAXES

Paragraph 1. The authority citation for part 1 continues to read in part as follows:

Authority: 26 U.S.C. 7805 * * *

Par. 2. Sections 1.141–7 and 1.141–8 are added to read as follows:

§ 1.141–7 Special rules for output facilities.

[The text of this proposed section is the same as the text of § 1.141–7T published elsewhere in this issue of the **Federal Register**.]

§ 1.141–8 $15 million limitation for output facilities.

[The text of this proposed section is the same as the text of § 1.141–8T published elsewhere in this issue of the **Federal Register**.]

Par. 3. Section 1.141–15 is amended by adding paragraphs (f) through (i) to read as follows:

§ 1.141–15 Effective dates.

* * * * *

(f) through (i) [The text of proposed paragraphs (f) through (i) is the same as the text of § 1.141–15T(f) through (i) published elsewhere in this issue of the **Federal Register**.]

Robert E. Wenzel,

Deputy Commissioner of Internal Revenue.

[FR Doc. 01–1413 Filed 1–17–01; 8:45 am]

BILLING CODE 4830–01–P

ENVIRONMENTAL PROTECTION AGENCY

40 CFR Part 52

[TX–126–1–7477; FRL–6933–8]

Approval and Promulgation of Implementation Plans; Texas; the Dallas/Fort Worth Nonattainment Area; Ozone

AGENCY: Environmental Protection Agency (EPA).

ACTION: Proposed rule.

SUMMARY: The EPA is proposing to approve the 1-hour ozone Attainment Demonstration State Implementation Plan (SIP), the Post 96 Rate-of-Progress (ROP) plan SIP, and the 15% ROP plan SIP for the Dallas/Fort Worth (DFW) serious ozone nonattainment area. The EPA is also proposing to extend the attainment date for the DFW area to November 15, 2007, from November 15, 1999, based on transport from the Houston/Galveston/Brazoria (HGA) ozone nonattainment area; approve the Motor Vehicle Emissions Budgets contained in the Attainment Demonstration SIP and the Post 1996 ROP plan SIP; approve the State's enforceable commitment to perform a mid-course review and submit a SIP revision to the EPA by May 2004; approve the State's enforceable commitment to revise the SIP Motor Vehicle Emissions Budgets using the MOBILE6 on-road emissions model; approve revisions to the 1990 base year inventory; and find that the DFW area meets the Reasonably Available Control Technology (RACT) requirements for major sources of volatile organic compounds (VOC) emissions. The EPA is also proposing to convert the conditional, interim approval of the DFW 15% plan (63 FR 62943) to a full approval because the requirements for full approval appear to have been met. This proposed action is based on the requirements of the Federal Clean Air Act (the Act) related to ozone demonstrations.

DATES: Written comments must be received on or before March 19, 2001.

ADDRESSES: Written comments on this action should be addressed to Mr. Thomas H. Diggs, Chief, Air Planning Section (6PD–L), at the EPA Region 6 Office listed below. Copies of documents relevant to this action, including the Technical Support Document (TSD) are available for public inspection during normal business hours at the following location.

Environmental Protection Agency, Region 6, Air Planning Section (6PD–L), 1445 Ross Avenue, Dallas, Texas 75202–2733.

Texas Natural Resource Conservation Commission, Office of Air Quality, 12124 Park Circle, Austin, Texas 78753.

Anyone wanting to examine these documents should make an appointment with the appropriate office at least two working days in advance.

FOR FURTHER INFORMATION CONTACT: Herbert R. Sherrow, Jr., Air Planning Section (6PD–L), 1445 Ross Avenue, Dallas, Texas 75202–2733. Telephone Number (214) 665–7237, e-Mail Address: sherrow.herb@epa.gov.

Table of Contents

I. Attainment Demonstration and Attainment Date
A. Proposed Action
B. Attainment Demonstration Contents
C. Photochemical Modeling
D. Photochemical Modeling Results
E. Weight-Of-Evidence
F. Emission Control Strategy
G. Motor Vehicle Emissions Budget
H. EPA's Analysis
II. Post 1996 Rate of Progress Plan
A. Proposed Action
B. Calculation of Requirements
C. Motor Vehicle Emissions Budget
III. 15% Rate of Progress Plan
Proposed Action
IV. Background
A. The Relevant Clean Air Act Requirements
B. Dates of State's SIP Submissions
C. General Requirements for an Attainment Demonstration and its Motor Vehicle Emissions Budgets
D. Ozone Transport Policy and Attainment Date Extensions
V. Administrative Requirements

SUPPLEMENTARY INFORMATION:

Throughout this document ''we,'' ''us,'' and ''our'' refers to EPA.

I. Attainment Demonstration and Attainment Date

A. Proposed Action

What Action Are we Taking?

We are proposing to approve the transport demonstration and attainment demonstration SIP developed for the DFW ozone nonattainment area because they meet the Clean Air Act. We believe that the State has adequately followed our 1998 Transport Guidance for demonstrating transport, and that the State's transport demonstration analyses indicate that there are impacts of ozone and ozone precursor transports from the upwind HGA area affecting the DFW area. In addition, we believe that the modeling, the provided weight-of-evidence analyses, and the analysis of transport of ozone and ozone precursor compounds from the HGA area, demonstrate that the control strategy chosen by the State will provide for attainment of the ozone standard. It is our technical position that the control strategy will provide for attainment of the ozone standard by November 15, 2007.

We are proposing to approve the DFW 1-hour ozone nonattainment area attainment demonstration SIP; the State's request for an extension of the attainment date to November 15, 2007, while retaining the area's current classification as serious; the Motor Vehicle Emissions Budgets; the State's enforceable commitment to conduct a mid-course review (including evaluation of all modeling, inventory data, and other tools and assumptions used to develop this attainment demonstration) and to submit a mid-course review SIP revision, with recommended mid-course corrective actions, to us by May 1, 2004; the Speed Limit Reductions in nine counties (including the DFW 4-county area; Dallas, Tarrant, Collin, and Denton Counties); a Voluntary Mobile Emissions Program in nine counties (including the DFW 4-county area); Transportation Control Measures in the DFW area; the 15% ROP Plan, the Post-1996 ROP Plan; revisions to the 1990 base year inventory; and the State's enforceable commitment to performing new mobile source modeling for the DFW area, using MOBILE6, our on-road mobile emissions factor computer model, within 24 months of the model's release; and, if transportation conformity analysis is to be performed between 12 months and 24 months after the MOBILE6 release, transportation conformity will not be determined until Texas submits a motor vehicle emissions budget which is developed using MOBILE6 and which we find adequate. We are also proposing to find that the DFW area meets all remaining outstanding VOC RACT requirements for major sources.

If the subsequent analyses conducted by the State as part of the mid-course review indicate additional reductions are needed for the DFW area to attain the ozone standard, we will require the State to implement additional controls as soon as possible which demonstrate attainment through photochemical grid modeling. We cannot finalize the proposed action upon the Attainment Demonstration SIP, the State's request for an extension of the attainment date, and the MVEB contained in the Attainment Demonstration SIP unless and until we have fully approved all of the control measures relied upon in the State's Attainment Demonstration SIP for the DFW area and the control measures required by the Act for a serious area such as the DFW area. See

section F., *Action needed on Control Measures* for a complete list of the rulemaking actions which must be completed before we can finalize action on the DFW Attainment Demonstration SIP, the attainment date extension, and the Attainment Demonstration SIP's MVEB. Furthermore, we cannot finalize action on these three items unless and until the Governor submits the finally adopted enforceable commitment regarding MOBILE6. The State has begun its public comment process on an enforceable commitment and has committed to performing new mobile source modeling for the DFW area, using MOBILE6, within 24 months of the model's release. The public hearing is scheduled for January 4, 2001.

Was the Submittal Addressed in Public Hearings and Adopted by the State?

Four Public hearings were held in the DFW area on January 26 and 27, 2000. The State formally adopted the submittal on April 19, 2000. In addition, the State held six other public hearings in other cities on the submittal. The Governor of Texas submitted the Attainment Demonstration SIP, a request for extension of the attainment date for the DFW ozone nonattainment area, adopted rules, orders and initiatives, and the mid-course commitment on April 25, 2000. The State has gone forward with its public participation requirements on a commitment to performing new mobile source modeling for the DFW area, using MOBILE6. The public hearing on this commitment is scheduled for January 4, 2001. We anticipate that the Governor of Texas will submit this adopted enforceable commitment in the Spring of 2001. The Governor also submitted after public notice and hearing, the Post 1996 ROP Plan and revisions to the 1990 base year inventory on October 25, 1999.

B. Attainment Demonstration Contents

What Are the Contents of the Attainment Demonstration Submittal?

The April 25, 2000 submittal, concerning the ozone attainment demonstration and an extension of the attainment date for the DFW ozone nonattainment area, contains:

1. A photochemical modeling demonstration and additional weight-of-evidence analyses supporting the photochemical modeling demonstration,
2. An accompanying control strategy, comprised of:
   a. Regulations and initiatives in the DFW area (and their documentation);
   b. Regulations and initiatives in certain counties surrounding the DFW area (and their documentation); and
   c. Additional regional rules and orders (and their documentation), relied upon for demonstrating attainment in the DFW area.
3. A 2007 Motor Vehicle Emissions Budget (MVEB) for transportation conformity;
4. A demonstration of transport from the HGA area supporting an attainment date extension to 2007;
5. Emissions growth estimates, and a 2007 forecast emissions inventory; and,
6. A commitment to perform a mid-course review with submittal to us by May 1, 2004.

The attainment control strategy; *i.e.,* regulations, initiatives, and orders, are primarily designed to control Nitrogen Oxides (NO_X) emissions from various sources, since the modeling shows ozone reduction is more sensitive to NO_X controls.

For purposes of this action, we are reviewing the modeling, weight-of-evidence support, the transport analysis, the MVEB, forecasted emissions inventory, the mid-course enforceable commitment, and the Transportation Control Measures, the Speed limit reductions and the Voluntary Mobile Emissions Program local initiatives. We are also reviewing the enforceable commitment to perform new mobile source modeling for the DFW area, using MOBILE6, within 24 months of the model's release, including a provision stating that if transportation conformity analysis is to be performed between 12 months and 24 months after the MOBILE6 release, transportation conformity will not be determined until Texas submits a motor vehicle emissions budget which is developed using MOBILE6 and which we find adequate.

C. Photochemical Modeling

What Model Approach Was Used for the Analysis?

The state used the Comprehensive Air Quality Model with Extensions (CAMx) version 2.01 photochemical grid model to conduct both the SIP attainment demonstration modeling and the downwind transport modeling for the DFW ozone nonattainment area. The State demonstrated that CAMx performed better than UAM version IV, the regulatory model, in the HGA nonattainment area and petitioned us to approve its use in the DFW nonattainment area. We approved the use of CAMx for the DFW ozone nonattainment area based upon the model's better performance in the HGA nonattainment area. This was considered to be valid for the DFW area. The State's modeling activities were performed as outlined in a series of the modeling protocols, according to our ''Guideline for Regulatory Application of the Urban Airshed Model'' (July, 1991) (Guideline). The final modeling protocol developed by the State was submitted in August 1999. This protocol was reviewed and approved by us. The State used a relatively large modeling domain with nested grids to capture the influence of regional and long-range transport. The modeling domain covers the DFW ozone nonattainment area which is comprised of Dallas, Tarrant, Collin, and Denton Counties. The modeling domain also covers most counties in central and east Texas, including the ozone nonattainment counties of Harris, Jefferson, Orange, Chambers, Hardin, Liberty, Montgomery, Waller, Brazoria, Galveston, and Fort Bend counties. It also covers a number of other States; *e.g.,* Louisiana and Mississippi in the southeastern portion of the country.

How Were Exceedance Days Evaluated and What Days Were Modeled?

Our 1991 Guideline sets forth a recommended procedure for selecting ozone exceedance days appropriate for conducting a modeling demonstration. This procedure, in part, considers wind rose analyses based upon the four morning hours of 0700 to 1000 local standard time. These wind rose analyses are used to define the meteorological patterns for source-receptor relationships associated with high ozone events. The State used this method for defining meteorological patterns. The number of ozone exceedance days for the period, 1990–1996, associated with each meteorological pattern was identified. The most prominent meteorological pattern for ozone exceedance days (*i.e.,* 70%) was calm winds; *i.e.,* wind speeds < 3mph. The meteorological pattern with southerly winds was the second most prominent pattern with 25% of the ozone exceedance days.

A total of eleven ozone exceedance days were identified as candidates for modeling. From these, the State chose the candidate episodes in 1995 (calm winds) and 1996 (southerly winds), in part, since they are more applicable to the most currently available emissions inventory (the 1996 Periodic) and since more ambient data is generally available for these episodes.

The State selected June 21 and 22, 1995, which form a multi-day episode, as two of the three primary episode days to model from the calm meteorological regime. These two days also had 1-hour exceedances fairly close to the current ozone design value (*i.e.,* 139 ppb). For

the third primary episode day, the State selected July 3, 1996. Although the meteorological pattern on July 3rd had neither calm nor southerly winds, since the two days prior exhibited southerly winds, the rationale for this selection is that July 3rd is associated with southerly winds. It also occurred during the period of enhanced aerometric monitoring. The high ozone episode days the State selected and modeled meet with the requisite three primary episode days and cover the two predominate types of meteorological patterns associated with high ozone in the DFW area. A more complete description of the episode selections and technical rationales can be found in the TSD.

How Was Potential Transport From the HGA Area Addressed?

The State demonstrated the potential transport of ozone and ozone precursors from the upwind HGA nonattainment area upon the DFW area for both the 1995 and the 1996 episodes. This demonstration was primarily based upon two modeling analyses. The first used the same set of air quality and meteorological inputs as used in the base case simulation, but with an emissions data set in which anthropogenic (man-made) emissions from the 8-county HGA area were eliminated. The second was an ozone source apportionment analysis. The CAMx model has an optional feature which tracks the sources of precursors that contribute to the ozone formed at a given location. This feature was used to assess the culpability of sources in the 8-county HGA nonattainment area to the DFW four-county nonattainment area. These analyses show that for July 3, 1996, 2–4 ppb of ozone in portions of the DFW area comes from HGA sources.

The State also submitted a back trajectory analysis of ozone exceedance days in the DFW area for the six year period, 1993 to 1998. During this period there were 160 exceedance days in the DFW area and approximately ten percent had trajectories going back to the HGA area.

Thus, emissions from the HGA area have the potential to influence DFW's ability to attain the 1-hour ozone standard. It is EPA's proposed technical position that for some ozone exceedance days, the DFW area is affected by transport from the HGA area. On other exceedance days, the DFW area is affected only by ozone precursor emissions generated within the DFW area itself.

Based on this transport demonstration, we propose to grant the State's request for an extension of the attainment date to November 15, 2007. A detailed discussion of the acceptability of the demonstration is in the section on *EPA's Analysis* in this notice. A discussion of the Transport Policy is in the BACKGROUND section of this notice.

D. Photochemical Modeling Results

What Were the Modeling Results for the Primary Episode Days and for the Future Attainment Date?

The model simulated ozone concentrations on selected primary episode days for the 1995 and 1996 episodes using emissions specific for those days, and emissions forecast to a 2007 future year. The resulting DFW area summary of the performance statistics and ozone peaks for 1995, 1996, and 2007 are shown in Table 1. The normalized bias and gross error performance statistics shown in Table 1 are well below our recommended maximum levels. This indicates that the model adequately replicated the spacial and temporal ozone formation that occurred on these ozone exceedance days. This provides an assurance that the model is useful in testing future control measures. These modeled ozone peaks reflect the results of the 2007 forecast emissions and control strategy for the 1995 and 1996 episode days.

TABLE 1—SUMMARY OF PERFORMANCE STATISTICS AND PEAK OBSERVED AND MODELED OZONE CONCENTRATIONS (PPB) IN THE DFW OZONE NONATTAINMENT AREA

Period	Episode days		
Primary Episode Day	6/21/95	6/22/95	7/3/96
Peak Observed	144	135	144
Peak Modeled Base Case	132.8	137.6	159.2
Peak Modeled 2007 Future Case	121.1	126.1	144.2
Peak Modeled 2007 Post-Control Case	110.3	113.1	131.5
Normalized Bias Greater Than 60 ppb	−10.1%	−8.8%	−3.4%
Normalized Gross Error Greater Than 60 ppb	12.2%	12.5%	15.0%

Do the Modeling Results Demonstrate Attainment of the Ozone Standard?

The *Guidance on Use of Modeled Results to Demonstrate Attainment of the Ozone NAAQS, (June, 1996)* recommends the use of either a statistical or deterministic approach to demonstrate attainment. Both of these approaches allow for the use of Weight-of-Evidence (WOE) to supplement the modeling results. The State elected to use the deterministic approach with WOE. As noted in Table 1, the 1-hour maximum predicted ozone concentration for the 2007 post-control modeling in the DFW area on the controlling day (July 3, 1996) (131.5 ppb) is above the standard; whereas, the other two episode days modeled are well below the standard.

The 2007 post-control modeling by itself does not conclusively demonstrate attainment of the standard; *(i.e.,* the deterministic test), but its results are so close to attainment to warrant the consideration of WOE analyses that support the demonstration of attainment. The State conducted several WOE analyses (see next section for further details) to provide additional confirmation that the demonstration shows that DFW will attain the standard by 2007 with the planned emission controls.

E. Weight-Of-Evidence

What WOE Analyses and Determinations Are Used To Support the Modeled Attainment Demonstration?

As presented in section D, our 1996 guidance document provides for the use of WOE to complement the control strategy modeling in demonstrating attainment. The key concept behind our June 1996 guidance is that determination of attainment, based on monitored ozone concentrations, allows for some exceedances of the 1-hour standard. Thus, even though the model may show some areas with peak concentrations slightly above the NAAQS, such modeled exceedances do

not necessarily imply that monitored attainment will not be achieved.

Since the 2007 post-control modeling for the July 3, 1996, episode day is the only day exceeding the standard, most of the WOE analyses address this day. The State submitted the following WOE analyses:

1. *Notable higher peak modeled than monitored ozone concentrations:* The monitored peak in the DFW area on July 3, 1996, was 144 ppb versus a modeled peak of 159 ppb. Thus, there is some uncertainty regarding the modeled peak, even though the episode satisfied all of our criteria for model performance.

2. *Meteorology:* As previously indicated, the specific meteorology on July 3, 1996, was not of the types most associated with ozone exceedances in the DFW area. In addition, although the model performance for July 3, 1996, was acceptable, there was an indication that the meteorological features were not fully replicated for this day. There were scattered rain showers in the area which may have presented some meteorological effects which could not be modeled.

3. *Additional ozone reduction metrics:* The State presented additional metrics, aside from the modeled peak. The metrics presented are Area of exceedance, Area-hours of exceedance, and a measure of potential exposure. These metrics measure the geographic extent and temporal duration and duration of the ozone exceedance for various control strategies. The results show that the modeled control strategy produces a significant reduction in each of these additional metrics. This indicates that the selected control strategy should reduce the geographical and temporal aspects of the ozone exceedance, as well as the peak concentration.

4. *Estimated future design value:* The estimated future design value, as recommended in our draft guidance for assessing attainment of the 8-hour standard, is determined by proportioning the change in the modeled ozone results to a change in the design value.

To estimate the future design value, the State developed a ratio of the 2007 post-control modeling results to that of the original Base modeling results. Since episodes chosen for the DFW attainment demonstration occurred during 1995 and 1996, the State used monitoring data collected from 1995 to 1997 in the DFW area to establish the base design values. Then the ratio of the modeling results is multiplied by the 1995–1997 base design value to obtain an estimated future design value. Using this procedure the estimated future design value for July 3rd is 115.3 ppb, which is less than the standard. This result suggests that it is likely that the area will attain the standard by 2007.

5. *Design value trends:* The State analyzed historic monitored air quality data in the DFW area for the period of 1981 to 1999. The measure of air quality which determines the nonattainment classification is the design value. The design value is the highest of the fourth-highest daily peak ozone concentration over a three year period at any monitoring site in the area. There had been a general downtrend in the design value; however, it has remained constant in recent years. The constant trend has occurred despite dramatic increases in the level of construction and economic activity and substantial growth in the mobile fleet. Existing regulations appear to be adequate to keep the design value constant and new regulations included in the SIP should provide a significant decline in the design value.

6. *New technologies:* The State plans to continue reviewing and implementing new technologies as appropriate for the DFW area. The area will also benefit from our requirements for cleaner vehicles and fuels in the future.

In summary, the State's WOE analyses provide adequate support for the State's attainment demonstration. Maintaining air quality through recent periods is demonstrated and future progress in air quality improvement is shown to be likely. Our decision on the adequacy of the WOE is based on the composite of the analyses, and not on any single element. The WOE complements the modeled control strategy and indicates attainment should be reached by November 15, 2007.

The 1996 guidance recognizes a need to perform a mid-course review as a means for addressing uncertainty in the modeling results. Because of the uncertainty in long term projections, we believe that a viable attainment demonstration that relies on weight of evidence should contain provisions for periodic review of monitoring, emissions, and modeling data to assess the extent to which refinements to emission control measures are needed. The State submitted an enforceable commitment to perform such a mid-course review and to submit a SIP revision by May 2004.

F. Emission Control Strategy

What Emission Control Strategies Were Included in the Attainment Demonstration?

The DFW attainment demonstration SIP is directed at reductions of NO_X since the modeling shows reductions of NO_X will be most effective in bringing the area into attainment of the Standard.

The attainment demonstration SIP relies on a combination of Federal measures, State measures, CAA statutory requirements, local initiatives applied to different groups of counties in, and adjacent to, the DFW area, and projections of the level of control in the HGA area based on enforceable commitments in the November 1999 SIP for the HGA area. The attainment demonstration SIP also relies on Regional measures applied in east and central Texas. Please refer to the TSD for more details regarding these measures, initiatives, growth rates and emission reductions.

Federal Measures: The State included the following Federal Measures in the Future Year Base Case.

1. On-road mobile sources:

—Tier 2 vehicle emission standards and federal low sulfur gasoline in DFW and HGA.
—National Low Emitting Vehicles standards.
—Heavy-duty diesel standards.

We believe that the projected growth rates and emissions reductions from the sources subject to the above federal measures were calculated correctly by the State.

2. Off-road mobile sources:

—Lawn and garden equipment standards.
—Tier III heavy-duty diesel standards.
—Locomotive standards.
—Compression ignition standards for vehicles and equipment.
—Spark ignition standards for vehicles and equipment.
—Recreational marine standards.

We believe that the State correctly projected the growth rates and emissions reductions subject to these federal measures.

CAA Statutory Requirements: The State included the following CAA Statutory Requirements in the Future Year Base Case.

—Phase II reformulated gasoline (RFG) in the DFW four-county nonattainment area and HGA eight-county nonattainment area.
—Texas motorists' choice inspection and maintenance (I/M) program in Harris, Dallas and Tarrant Counties.

We believe that the State correctly projected the growth rates and

emissions reductions from sources subject to these CAA Statutory Requirements.

State Measures: The State included the following State Measures as local (DFW) area controls in the Future Year Base Case.

—Electric generating and industrial point sources—four county area.
—An expanded vehicle Inspection/Maintenance program—nine county area.
—Low emission diesel fuel—nine county area.
—Heavy-duty diesel operating restrictions—four county area.
—Accelerated purchase of Tier 2/3 non-road compression ignition equipment—four county area.
—Airport ground support equipment electrification—airports of a certain size in the four county area.
—Gasoline heavy equipment engines—nine county area.
—Gas-fired water heaters, small boilers, and process heaters—State-wide.

We have already published actions on some of the above control measures in the **Federal Register** as discussed below. We believe that the State correctly projected the growth rates for and the emissions reductions from these affected sources.

Local Measures:

1. Speed limit reductions—nine county area.
2. Voluntary Mobile Emissions Program—nine county area.
3. Transportation Control Measures—four county area.

Our proposed action on these three local measures is discussed in more detail later in this section.

Regional Measures:

1. Agreed orders with Alcoa, Inc. (formerly Aluminum Company of America) for their Milam Facility, and the Eastman Chemical Company, Texas operations, for their facility near Longview, Texas.
2. Electric generating facilities and cement plants in central and eastern Texas.
3. Low Reid Vapor Pressure Gasoline in eastern and central Texas.
4. Stage I gasoline vapor recovery at gas stations in central and eastern Texas.

We have already published actions on the above control measures in the **Federal Register**, as discussed below.

Action Needed on Control Measures

We cannot finalize an action upon the Attainment Demonstration SIP, its MVEB, and the State's Request for an Extension of the Attainment Date until we have finalized action on the following:

1. The revised emission specifications in the DFW area for Electric Utility Boilers, Industrial, Commercial or Institutional Boilers and certain Process Heaters (30 TAC sections 117.104, 117.106, 117.108, 117.116, 117.206 as they relate to the DFW area, and the repeal of sections 117.109 and 117.601 as they relate to the DFW area): Proposed approval October 31, 2000. See 65 FR 64914.
2. Vehicle Inspection/Maintenance program (30 TAC 114.2, 114.50—114.53).
3. Low emission diesel fuel (30 TAC 114.6, 114.312–114.317, 114.319).
4. Non-Road Large Spark-Ignition (LSI) Engines (30 TAC 114.420, 114.421, 114.422, 114.427, and 114.429). Accelerated Purchase of Tier2/Tier3 Non-Road Compression-Ignition Equipment (30 TAC 114.410, 114.412, 114.416, 114.417, and 114.419). Non-Road Construction Equipment Restriction (30 TAC 114.432, 114.436, 114.437, and 114.439). Electrification of Airport Ground Support Equipment (GSE) (30 TAC 114.400, 114.402, 114.406, and 114.409.
5. The State-wide NO_X rules for Water Heaters, Small Boilers, and Process Heaters (30 TAC sections 117.460, 117.461, 117.463, 117.465, 117.467, 117.469): Direct final approval effective December 25, 2000. See 65 FR 64148.
6. The agreed orders with Alcoa, Inc. (formerly Aluminum Company of America) for their Milam Facility, and the Eastman Chemical Company, Texas operations, for their facility near Longview, Texas: Direct final approval effective December 25, 2000. See 65 FR 64148.
7. The NO_X rules for Electric Generating Facilities and cement plants in East and Central Texas (30 TAC sections 117.131, 117.133, 117.134, 117.135, 117.138, 117.141, 117.143, 117.145, 117.147, 117.149, 117.512, 117.260, 117.261, 117.265, 117.273, 117.279, 117.283, 117.524): Proposed approval October 31, 2000. See 65 FR 64914.
8. Lower Reid Vapor Pressure Gasoline in eastern and central Texas (30 TAC sections 114.1, 114.301, 114.304–114.307, and 114.309). Proposed approval November 20, 2000. See 65 FR 69720.
9. Stage I vapor recovery in eastern and central Texas (30 TAC sections 115.222–114.229): Proposed approval December 20, 2000. See 65 FR 79745.
10. VOC rules as RACT for batch processing (30 TAC sections 115.160–115.169) and wastewater (30 TAC sections 115.140–115.149): Proposed approval December 20, 2000. See 65 FR 79745.
11. The administrative revisions to the existing Texas NO_X SIP (30 TAC sections 117.101—117.121, 117.201–117.223, 117.510, 117.520, and 117.570): Proposed approval October 31, 2000. See 65 FR 64914.
12. Texas Clean Fleet Program (30 TAC 114.1, 114.3, 114.150, 114.151, 114.153–114.157, 114.201, 114.202, 114.152).
13. The 15% ROP Plan.
14. The Post 1996 ROP Plan.
15. The revisions to the 1990 base year inventory.
16. The speed limit reductions, the VMEP and the TCMs.
17. The finding that major sources of VOCs in the DFW area are meeting RACT.

It should be noted that several of these measures are the subject of ongoing litigation. Should the State lose, and as a result imperil any reductions needed for attainment, and there are no measures which make up the lost reductions, we may have to disapprove the attainment demonstration SIP.

What Are the Local Initiatives and Are They Approvable?

The State submitted three local initiatives: Speed limit reductions in the nine county area (Dallas, Tarrant, Collin, Denton, Ellis, Johnson, Parker, Rockwall, and Kaufman Counties), a Voluntary Mobile Emissions Program in the nine county area, and Transportation Control Measures in the four county area.

Speed Limit Reductions

The Texas Department of Transportation (TxDOT) revised regulations relating to speed limits to allow TNRCC to submit a request to change speed limits for environmental reasons when justified. Please see adopted rules, 25 TexReg 5686, June 9, 2000; and proposed rules, 25 TexReg 2018, March 10, 2000). TxDOT, using this authority, will lower all 70 mile per hour (mph) speed limits to 65 mph, and all 65 mph speed limits to 60 mph in the four county area. These slower speeds are anticipated to reduce the emissions of NO_X and improve air quality. We propose approval of the speed limit reductions control measure.

Voluntary Mobile Emissions Program (VMEP) Reductions

What Is EPA's VMEP?

Voluntary mobile source strategies that attempt to complement existing regulatory programs through voluntary, non-regulatory changes in local transportation activities or changes in in-use vehicle and engine composition

constitute the VMEP. The Clean Air Act allows SIP credit for new approaches to reducing mobile source emissions. This flexible approach is set forth in section 110. Economic incentive provisions are in sections 182 and 108 of the Act. Credits generated through VMEP can be counted toward attainment and maintenance of the NAAQS. Up to 3% of the total future year emissions reductions required to attain the appropriate NAAQS may be claimed under the VMEP policy.

What Qualifies for SIP Credit?

The basic framework for ensuring SIP credit for VMEPs is spelled out in guidance that came out under a memorandum from Richard D. Wilson, Acting Assistant Administrator for Air and Radiation, dated October 24, 1997, entitled ''Guidance on Incorporating Voluntary Mobile Source Emission Reduction Programs in State Implementation Plans (SIPs).'' Generally, to obtain credit for a VMEP, a State submits a SIP that:

(1) Identifies and describes a VMEP;

(2) Contains projections of emission reductions attributable to the program, along with any relevant technical support documentation;

(3) Commits to evaluation and reporting on program implementation and results; and

(4) Commits to the timely remedy of any credit shortfall should the VMEP not achieve the anticipated emission reductions.

More specifically, the guidance suggests the following key points be considered for approval of credits. The credits should be quantifiable, surplus, enforceable, permanent, and adequately supported.

In addition, VMEPs must be consistent with attainment of the standard and with the Rate of Progress requirements and not interfere with other Clean Air Act requirements.

What Did the State Submit?

The State submitted program descriptions that projected emission reductions attributable to each specific program as part of the DFW attainment demonstration submitted April 25, 2000. The State commits to evaluating each program to validate estimated credits. Table 2 lists the programs and projected credits. Programs submitted with no credit assigned are listed in Table 3.

TABLE 2.—VOLUNTARY MOBILE EMISSION REDUCTION PROGRAMS AND CREDITS CLAIMED

Program type	VOC benefits (tons per day)	NO_X benefits (tons per day)
Alternative Fuel Program	0.18	0.18
Employee Trip Reduction	0.29	0.53
Public Education Campaign/Ozone Season Fare Reduction	0.08	0.15
Tier II Locomotive Engines	0 to 0.6	0 to 3.0
Vehicle Retirement Program/Vehicle Maintenance*	0.56	0.77
Total Benefits (tpd)	1.11 to 1.71	1.63 to 4.63

* Emission benefits quantified for the Vehicle Retirement Program only. Emission benefits for Vehicle Maintenance are credited in the Vehicle Inspection and Maintenance Program.

TABLE 3.—VOLUNTARY EMISSION REDUCTION PROGRAMS WITH NO CREDIT ASSIGNED

Sustainable Development
Non-Road Ozone Season Reductions
Off-Road Heavy Duty Diesel Engine Retrofits

The State's goal is 5.0 tons per day of NO_X benefit from the VMEP program. This is within the 3% criteria in our guidance. The State has committed to evaluating and reporting on the program implementation and results and to timely remedy of any credit shortfall.

The State also committed to additional Transportation Control Measures that can be substituted for any shortfall in credit from the estimated credits for VMEP. These include Signal Improvements and Freeway Corridor Management.

Do the VMEPs Meet the Requirements for Approval?

A detailed analysis of all the VMEP measures can be found in the TSD for this document. For each creditable VMEP, the measure was found to be quantifiable. The reductions are surplus by not being substitutes for mandatory, required emission reductions. The measures will be enforced by the State. The reductions will continue at least for as long as the time period in which they are used by this SIP demonstration, so they are considered permanent. Each measure is adequately supported by personnel and program resources for implementation.

What Action is EPA Taking on the VMEP?

The DFW Attainment SIP VMEP meets the criteria for credit in the SIP. The State has shown that the credits are quantifiable, surplus, enforceable, permanent, adequately supported, and consistent with the SIP and the Act. We propose to approve the VMEP portion of the Texas SIP.

Transportation Control Measures (TCMs)

The State has included a variety of TCMs in the SIP as a control strategy for attainment of the ozone NAAQS. The specific TCMs have been described in detail in Appendix G of the SIP and will be incorporated by reference in the Code of Federal Regulations in the final approval action. Detailed information is necessary for those TCMs used as emissions reduction measures in the SIP to ensure that they are specific and enforceable as required by the Act and reflected in our policy. The TCMs' description in the SIP includes identification of each project, location, length of each project (if applicable), a brief project description, implementation date, and emissions reductions for both VOC and NO_X.

The TCMs identified through this process and included in the SIP are contained and funded in the metropolitan transportation plan (MTP) and transportation improvement program (TIP) to ensure funding for implementation. We propose approval of the transportation control measures.

What Are the Projected NO_X reductions From the Federal and State Control Measures and Local Initiatives?

Table 4 provides the projected NO_X reductions for the 2007 attainment year resulting from the Federal and State rules, and the local initiatives.

TABLE 4.—NO_X REDUCTION ESTIMATES

(tons per day)

	Reduction
Federal Measures	
On-road mobile	93.00
Off-road mobile	48.00
Total Federal Measures	141.00
State Measures	
Major point sources	129.00
Inspection/Maintenance	54.45

TABLE 4.—NO_X REDUCTION ESTIMATES—Continued

(tons per day)

Low emission diesel fuel	3.48
HD diesel oper. restrictn (est)	2.50
Acc purchase Tier II/III spark	13.80
Airport GSE	9.54
Heavy equipment gas engines	1.80
Gas-fired water heaters, etc	0.50
Total State measures	215.07
Local Initiatives	
Speed limit reduction	5.42
VMEP (2.4 tpd—5.4 tpd)	5.00
TCMs	4.73
Total Local Initiatives	15.15
TOTAL NO_X REDUCTIONS	371.22

G. Motor Vehicle Emissions Budget

What Is a Motor Vehicle Emissions Budget (MVEB) and Why Is it Important?

The MVEB is the level of total allowable on-road emissions established by a control strategy implementation plan or maintenance plan. In this case, the MVEB establishes the maximum level of on-road emissions that can be produced in 2007, when considered with emissions from all other sources, which demonstrate attainment of the NAAQS. It is important because the MVEB is used to determine the conformity of transportation plans and programs to the SIP, as described by section 176(c)(2)(A) of the Act.

What Are the MVEBs Established by This Plan and Proposed for Approval by This Action?

The MVEBs established by this plan and that the EPA is proposing to approve are contained in Table 5.

TABLE 5.—2007 ATTAINMENT YEAR MOTOR VEHICLE EMISSIONS BUDGETS

(tons per day)

Pollutant	2007
VOC	107.60
NO_X	164.30

What Is the State's Commitment to Revise the Motor Vehicle Emissions Budgets With MOBILE6?

All States whose attainment demonstration includes the effects of the Tier 2/sulfur program have committed to revise and resubmit their motor vehicle emissions budgets after we release MOBILE6. The State has begun its public comment process on an enforceable commitment and has committed to performing new mobile source modeling for the DFW area, using MOBILE6, within 24 months of the model's release. The public hearing is scheduled for January 4, 2001. In addition, the enforceable commitment includes a provision stating that if a transportation conformity analysis is to be performed between 12 months and 24 months after the release of MOBILE6, transportation conformity will not be determined until the State submits an MVEB which is developed using MOBILE6 and which we find adequate. The North Central Texas Council of Governments and the Department of Transportation have been informed of the commitment.

After adoption by the Commissioners, the Governor of Texas must submit the enforceable commitment to us. If the State fails to meet its commitment to submit revised budgets using MOBILE6, we could make a finding of failure to implement the SIP, which would start a sanctions clock under section 179 of the Act.

What Is the Applicable Budget To Use for Conformity Analysis?

The proposed approval of the MVEB in Table 5 would be effective for conformity purposes only until revised motor vehicle emissions budgets are submitted and we have found them adequate. In other words, the budgets that are part of this attainment demonstration will apply for conformity purposes only until there are new, adequate budgets consistent with the State's commitments to revise the budgets. The revised budgets will apply for conformity purposes as soon as we find them adequate.

We are proposing to limit the duration of our approval in this manner because we are only proposing to approve the attainment demonstrations and their budgets because the States have committed to revise them after we release MOBILE6 and after the State conducts its mid-course review. Therefore, once we have confirmed that the revised budgets are adequate, they will be more appropriate than the budgets we are proposing to approve for conformity purposes now.

If the budgets we propose to approve raise issues about the sufficiency of the attainment demonstration, we will work with the State. If the revised budgets show that motor vehicle emissions are lower than the budgets we approve, a reassessment of the attainment demonstration's analysis will be necessary.

This action does not propose any change to the existing transportation conformity rule or to the way it is normally implemented with respect to other submitted and approved SIPs, which do not contain commitments to revise the budget.

H. EPA's Analysis

Did the State Adequately Document the Techniques and Data Used To Derive the Modeling Input Data and Modeling Results?

Yes, the submittal from the State thoroughly documented the techniques and data used to derive the modeling input data. The submittal adequately summarized the modeling outputs and the conclusions drawn from these model outputs. The submittal adequately documented the State's weight-of-evidence determinations and the bases for concluding that these determinations support the attainment demonstration.

Did the Modeling Procedures and Input Data Used Comply With the Environmental Protection Agency Guidelines and Clean Air Act Requirements?

Yes, the modeling procedures and input data (including the emissions inventory inputs and procedures) meet the requirements of the Act and are consistent with our July 1991 and June 1996 ozone modeling guidelines.

Does the Emission Control Strategy Meet the Requirements of the Clean Air Act?

Yes, the selected emission control strategy, based upon modeling and the WOE techniques, plus additional information regarding the effect of HGA upon DFW, demonstrates attainment of the 1-hour ozone standard in DFW.

Does the Weight-of-Evidence Support the Attainment Demonstration?

Yes, the submittal adequately documented the State's WOE determinations and the bases for concluding that these determinations adequately complement the attainment demonstration.

The WOE, when viewed in aggregate with the modeling, shows attainment of the standard and thus we are proposing approval.

Has the State Adopted the Selected Emission Control Strategy and Has the State Adopted the Emission Control Regulations Needed to Implement the Emission Control Strategies?

Yes, the State has adopted and submitted the emission control strategies and all associated emission control regulations, orders, and the TCMS, Speed Limit Reductions, and the VMEP initiatives.

Has the State Adopted all Local Measures Required by the Clean Air Act for the Area's Current Ozone Classification?

Yes, the State has adopted all VOC and NO_X emission control requirements required under the Clean Air Act (Act) for a serious ozone nonattainment area. Please see the TSD for a listing of requirements and the dates they were satisfied.

It is our position that the State of Texas has met the 1998 Transport Policy's criteria for adoption and submittal to EPA for approval of all measures required under the Act for an area classified as serious.

Has the State Implemented all Reasonably Available Control Measures?

Yes. Section 172(c)(1) of the Act requires SIPs to provide for the implementation of all reasonably available control measures (RACM) as expeditiously as practicable and for attainment of the standard. We have previously provided guidance interpreting the RACM requirements of 172(c)(1) in the General Preamble. See 57 FR 13498, 13560 (April 16, 1992). In the General Preamble, we indicated our interpretation of section 172(c)(1), under the 1990 amendments, as imposing a duty on States to consider all available control measures and to adopt and implement such measures as are reasonably available for implementation in the particular nonattainment area. We also retained our pre-1990 interpretation of the RACM provisions that where measures that might in fact be available for implementation in the nonattainment area could not be implemented on a schedule that would advance the date for attainment in the area, we would not consider it reasonable to require implementation of such measures. We indicated that States could reject certain RACM measures as not reasonably available for various reasons related to local conditions. A State could include area-specific reasons for rejecting a measure as RACM, such as the rejected measure would not advance the attainment date, or technological and economic feasibility in the area.

We also issued a recent memorandum reaffirming our position on this topic, ''Guidance on the Reasonably Available Control Measures (RACM) Requirement and Attainment Demonstration Submissions for Ozone Nonattainment Areas.'' John S. Seitz, Director, Office of Air Quality Planning and Standards, dated November 30, 1999. A copy can be obtained from *www.epa.gov/ttn/oarpg/t1pgm.html.* In this memorandum, we state that in order to determine whether a state has adopted all RACM necessary for attainment and as expeditiously as practicable, the state will need to provide a justification as to why measures within the arena of potential reasonable measures have not been adopted. The justification would need to support that a measure was not reasonably available for that area and could be based on technological or economic grounds.

We reviewed additional potential available measures, as documented in the RACM analysis in the TSD (Appendix C) for this proposed rulemaking. Our analysis showed that the State is already controlling the significant major point sources and area sources to RACM levels and the SIP contains the transportation control measures reviewed nationally, as well as a motor vehicle Inspection and Maintenance program. Based on this analysis, we propose to conclude that any remaining evaluated measures are not reasonably available for the specific DFW area, because (a) some would require an intensive and costly effort for numerous small area sources or transportation control measures, and (b) since the DFW area relies in part on reductions from the upwind HGA area which are substantial, and the reductions projected to be achieved by the evaluated additional set of measures are relatively small, they would not produce emission reductions sufficient to advance the attainment date in the DFW area and, therefore, should not be considered RACM.

Although we encourage areas to implement available RACM measures as potentially cost effective methods to achieve emissions reductions in the short term, we do not believe that section 172(c)(1) requires implementation of potential RACM measures that either require costly implementation efforts or produce relatively small emissions reductions that will not be sufficient to allow the DFW area to achieve attainment in advance of full implementation of all other required measures.

Has the State Established an Acceptable MVEB?

The MVEB budget submitted by the State for the DFW area is adequate and is consistent with all pertinent SIP requirements, and the MVEB is proposed for approval.

Does the DFW Area Meet the RACT Requirements for Major Source VOC Emissions?

On March 7, 1995, as part of our action approving VOC requirements, we found that the State had implemented RACT on all major sources in the DFW area except those that were to be covered by post-enactment Control Technique Guidelines (CTG's) (44 FR 12438). Since that time many expected CTGs were issued as Alternative Control Technique documents—ACTs. Of the expected CTGs and ACT's, DFW had major sources in the following categories; batch processing, reactors and distillation, wood furniture and aerospace coating. We have approved measures for all of these categories as meeting RACT. (*See* the TSD for this action for dates.)

With regard to Aerospace coatings, we have approved Alternate RACT determinations for the major sources in the DFW area: Lockheed-Martin, Bell Helicopter Textron, and Raytheon Texas Instruments Systems, Inc. January 20, 1994 (*See* 59 FR 02532), May 30,1997 (*See* 62 FR 29297), and February 9, 1998 (*See* 63 FR 6491), respectively. With these Alternative RACT determinations, we concluded that RACT was in place for these Aerospace coating sources. On March 27, 1998, we published the National Emission Standards for Hazardous Air Pollutants (NESHAP) final rule and the Control Technique Guideline for Aerospace Manufacturing and Rework facilities. (*See* 63 FR 15006). The State submitted revisions to its coating rules on July 13, 2000 to ensure the control requirements for Aerospace companies remained consistent with the NESHAP rule. At the same time, the State requested that these replace the Alternative-RACT plans as a part of the Texas SIP. The revised 2000 aerospace rules provide provisions that are more consistent with the new MACT standards and we anticipate that we will propose approval of these provisions. In the mean time, we believe the previously approved alternative RACT plans continue to meet the RACT requirements for these three sources.

Also, with the reclassification of the DFW area to serious, the major source size was decreased to 50 tons per year. This necessitated that the State revise its rules for bakeries and adopt rules for the large offset lithographers category. We have approved the rule revisions for bakeries and the new rules for offset lithographers as meeting the RACT requirements. (*See* TSD for dates and cites).

Thus, it is our position that RACT is in place for all major sources of VOCs in the DFW area.

Was the Demonstration of Transport From the HGA Area Acceptable To Support the Request for Extension of the Attainment Date?

The policy for the extension of an ozone attainment date is discussed in the **BACKGROUND** section of this notice. The State's compliance with these requirements is discussed here.

a. Identification of the area as a downwind area affected by ozone transport.

We have reviewed the photochemical modeling demonstrations, and are proposing to agree with the State that the July 3, 1996, episode adequately demonstrates transport of pollutants from the HGA area. We are proposing that this transported pollution affects DFW's ability to attain by the current attainment date. Thus, the DFW and HGA areas are inextricably linked. Without controls in the HGA area, the DFW area's ability to attain is jeopardized. We, therefore, propose to find that the State's demonstration of ozone transport meets the criteria in our attainment date extension policy.

b. Submittal of an approvable attainment demonstration.

EPA's review of the attainment demonstration SIP shows that it should be approved. The State has modeled and adopted an acceptable control strategy that demonstrates attainment. We are proposing to approve the attainment demonstration SIP, and to agree that it meets the criteria in the July 1998 transport policy and all other EPA guidance and the regulatory and statutory requirements.

c. Adoption of all applicable local measures required under the area's current ozone classification.

Texas has adopted all VOC and NO_X related emission control requirements required by the Act for a serious ozone nonattainment area. A listing of applicable CAA serious classification-related VOC and NO_X related regulations and their state-adopted dates for the DFW area, is provided in the TSD to this rulemaking.

It is our position that the State of Texas has met the 1998 Transport Policy's criteria for adoption and submittal of all measures required under the Act for an area classified as serious. We must finalize approval actions upon the remaining serious area requirements—the 15% ROP Plan, the Post-96 ROP Plan, the I/M SIP, and the Clean-fuel Vehicle SIP, before we can make a final finding that the DFW area is meeting all of its classification's statutory requirements, however.

d. Implementation of all adopted measures by the time upwind controls are expected.

All of the NO_X and VOC rules will be implemented as expeditiously as practicable, but no later than 2005, two years before the HGA attainment date of November 15, 2007.

We are proposing to find that this transport policy criteria has been met by the State. We are of the opinion that the phase-in compliance dates are as expeditious as practicable compared with the compliance dates of similar sources in serious ozone nonattainment areas of the country.

II. Post 1996 Rate of Progress Plan

A. Proposed Action

What Action Are We Taking?

We are proposing approval of the Post 1996 Rate of Progress (ROP) plan (9% plan), submitted by the Governor on October 25, 1999, which is designed to reduce ozone forming emissions from the baseline emissions by 9% in the DFW nonattainment area for the years 1997–1999. This plan meets the Reasonable Further Progress requirements of the Act (section 182(c)(2)). In addition, we are proposing to approve the MVEBs associated with the 9% plan. We are also proposing to approve the changes to the 1990 base year emissions inventory for the DFW area. The SIP was submitted October 25, 1999, and found complete January 6, 2000.

B. Calculation of Requirements

How Do we Calculate the Needed VOC Emissions Reductions?

Calculating the needed emission reductions is a multi-step process as described below.

Emissions Inventory: The 1990 Final Base Year Inventory is the starting point for calculating the reductions necessary to meet the requirements of the 1990 Act. The 1990 Final Base Year Inventory includes all area, point, non-road mobile, and on-road mobile source emissions in the four county DFW ozone nonattainment area. The 1990 base year inventory was originally approved November 8, 1994 (59 FR 55586). The State revised the VOC inventory on August 8, 1996. These changes were approved November 10, 1998 (63 FR 62943). The state revised the 1990 base year VOC inventory again with the October 25, 1999, SIP revision. The October 25, 1999, SIP revision also contained the State's first revisions to the 1990 base year NO_X emissions inventory. The changes resulted from data gathered for the 1993 and 1996 periodic inventories. Analysis of the changes in the periodic inventories was backcast to the 1990 inventory for consistency since the 1990 inventory remains the ROP beginning point. We have reviewed the inventory revisions and they have been developed in accordance with our guidance on emission inventory preparation. Thus, we are proposing approval of the October 25, 1999, revisions to the 1990 base year inventory. The revised 1990 base year inventory is summarized in Table 6. For more detail on how emissions inventories were estimated, see Appendix H in the TSD for this action.

TABLE 6.—1990 RATE-OF-PROGRESS BASE YEAR EMISSIONS INVENTORY

(tons per day)

Base year inventory		
Source type	VOC	NO_X
Point	63.98	71.76
Area	174.02	19.99
On-road Mobile	306.60	293.03
Non-road Mobile	105.19	166.05
Total	649.79	550.83

Adjusted Base Year Inventory: Section 182(b)(2)(C) explains that the baseline from which emission reductions are calculated should be determined as outlined in section 182(b)(1)(B) for 15% ROP plans. This requires that the baseline exclude emission reductions due to Federal Motor Vehicle Control Programs (FMVCP) promulgated by the Administrator by January 1, 1990, and emission reductions due to the regulation of Reid Vapor Pressure promulgated by the Administrator prior to the enactment of the Clean Air Act Amendments of 1990. These measures are not creditable to the Rate of Progress Plans.

Growth Estimates: States need to provide sufficient control measures in their ROP plans to offset any emissions growth. To do this the State must estimate the amount of growth that will occur. The State uses population and economic forecasts to estimate how emissions will change in the future. Generally, the State followed our standard guidelines in estimating the growth in emissions. For the projection of NO_X emissions from industrial sources, the State used data collected during the development of the 1996 periodic emissions inventory. With the 1996 periodic inventory, Texas surveyed industry to determine why emissions were changing, to determine if changes were actual changes in emissions to the atmosphere, or just

changes in the emission estimation methodology. For example, many sources installed continuous emission monitors between 1990 and 1996, and actual measurements replaced engineering estimates. For more detail on how emissions growth was estimated, see Appendix H in the TSD for this action.

Calculation of Target Level: Table 7 shows how the emissions inventory, adjusted inventories and growth estimates are used to calculate the target levels of emissions and needed emission reductions.

TABLE 7.—CALCULATION OF REQUIRED VOC REDUCTIONS

(tons per day)

1990 Emission Inventory	649.79
1990 Adjusted Relative to 1996	547.54
1990 Adjusted Relative to 1999	535.78
RVP and Fleet Turnover	11.76
9% of 1990 Adjusted Relative to 1999	48.22
1996 Target level	465.52
1999 Target level	405.54
1999 Projection	575.28
Total Reductions required by 1999	169.74
Reductions required by 15%	139.98
Additional Reductions Required	29.76

How Are Those Emission Reductions Achieved?

Table 8 documents how the VOC emission reductions for this 9% plan are to be achieved. The following control measures are used: Aircraft Engines, Transportation Control Measures (TCMs), Windshield washer fluid, Utility Engines 1997—1999, Underground Storage Tank Remediation, vehicle Tier 1, vehicle Inspection/Maintenance, and RFG.

The State also revised its estimates of on-road motor vehicle emissions based on vehicle registration data updated to 1998. We are proposing to find them acceptable.

The State included a variety of TCMs in the SIP as a control strategy for attainment of the ozone NAAQS. The specific TCMs are described in detail in Appendix G of the SIP and will be incorporated by reference in Code of Federal Regulations in the final approval action. Please refer to the detailed discussion of TCM requirements under *Transportation Control Measures* in the Emission Control Strategy sub-section (sub-section I.E) of this action.

The TCMs identified through this process and included in the SIP are contained and funded in the metropolitan transportation plan (MTP) and transportation improvement program (TIP) to ensure funding for implementation.

Please refer to the TSD for details of our analysis of the control measures and our basis for proposing to find the projected emission reductions from these measures acceptable.

TABLE 8.—SUMMARY OF VOC EMISSION REDUCTIONS

(tons per day)

Required Reduction	29.76
Creditable Reductions	
Aircraft Engines	1.52
TCMs	3.74
Windshield washer fluid	0.29
1998 vehicle registration	3.57
Utility Engine 1997–1999	2.37
UST remediation	1.81
Tier 1, I/M, RFG	16.82
Total	30.12

Does the Plan Achieve the Goal of a 9% Reduction in VOCs From the Baseline for 1997 to 1999?

Yes. Since the required reductions are 29.76 tons per day and the creditable reductions are 30.12 tons per day, the plan has excess reductions of 0.36 tons per day and achieves the goal; therefore, we are proposing approval of the Post 1996 ROP Plan.

Did the State Submit Additional Reductions?

Yes. The State also submitted NO_X reductions. The State's basic NO_X RACT rules were approved September 1, 2000. See 65 FR 53172. We are accepting the State's NO_X reductions as creditable reductions.

TABLE 9.—SUMMARY OF NO_X EMISSION REDUCTIONS

(tons per day)

Required Reduction	0.00
Creditable Reductions	
NO_X RACT	10.45
RFG, I/M, FMVCP Tier I	56.25
Off-road heavy duty diesel	11.98
Total	78.68

C. Motor Vehicle Emissions Budget

What Are the MVEBs Established by This Plan and Approved by This Action?

The MVEBs established by this plan and that we are proposing to approve are contained in Table 10. The MVEBs have been found to meet the adequacy criteria and upon further review of the SIP for approvability continue to be consistent with ROP.

TABLE 10.—1999 9% ROP SIP MOTOR VEHICLE EMISSIONS BUDGETS

(tons per day)

Pollutant	1999
VOC	147.22
NO_X	284.14

III. 15% Rate of Progress Plan

Proposed Action

What Action Are We Taking?

We are proposing full approval of the 15% plan submitted on August 8, 1996, contingent upon us finalizing approval of the State's I/M program for the DFW area. The 15% plan was given conditional, interim approval on November 10, 1998, pending corrections to the DFW I/M program. It was given conditional, interim approval because it relied on emissions reductions from the I/M program that received conditional, interim approval. For further information on the I/M conditional, interim approval, see 62 FR 37138, published on July 11, 1997. We found that the State had met the conditions of the conditional approval. On April 23, 1999, we removed the conditions and granted Texas a final interim approval. See 64 FR 19910. The interim approval expired on February 11, 1999. Texas has submitted significant revisions to the I/M program for the DFW area. The revisions expand the program from the 2 core nonattainment counties to the 4 counties in the nonattainment area plus 5 additional counties. We are taking a separate action on these I/M revisions. Because the revisions appear to have eliminated the last impediment to full approval of the I/M program for the DFW area, we are proposing full approval of the DFW 15% plan. This proposed full approval of the DFW 15% plan will not be finalized until action on the I/M program is complete. If the I/M program is disapproved, a different action on the 15% plan will have to be taken. See 63 FR 62943 and the 15% plan TSD for additional information on the DFW 15% plan.

How Did the Inspection/Maintenance Program Submitted With the Attainment Demonstration Purport To Cure the Previous Deficiencies?

As stated previously, an interim conditional approval for the Motorist Choice Program was proposed on October 3, 1996 (61 FR 51651). An interim final conditional approval was published on July 11, 1997 (62 FR 37138). The conditions were removed from the interim approval on April 23, 1999 (64 FR 19910). The interim

approval status of this program lapsed on February 11, 1999.

The State submitted an approvable 18-month demonstration on February 8, 1999, as required by the National Highway System Designation Act of 1995, Public Law 104–59, section 348(c)(1). The program was not fully approved at that time because one provision of the interim approval remained: that the State provide evidence that the remote sensing program was effective in identifying the shortfall in number of vehicles needed to make up for the lack of a tailpipe testing program in all the nonattainment counties. This evidence has yet to be submitted.

Modeling has since shown that NO_X reductions are essential to reaching attainment in the DFW area. As a result, the Texas Motorist Choice I/M program has been revised to include measurement for NO_X emissions and to provide additional NO_X emission reductions by expanding coverage of the program to all four counties within the DFW nonattainment area (Dallas, Tarrant, Collin and Denton) and selected attainment counties in the DFW consolidated metropolitan statistical area (Ellis, Johnson, Parker, Rockwall, and Kaufman). By revising the program to expand area coverage for NO_X SIP credits, the deficiency that prohibited full approval in DFW appears to be cured. All DFW nonattainment counties will be participating in the full program. As indicated above, we have not taken a final action on the I/M submittal. We will be seeking comment on the I/M program in a separate action.

IV. Background

A. The Relevant Clean Air Act Requirements

The Act requires us to establish National Ambient Air Quality Standards (NAAQS) for certain widespread pollutants that cause or contribute to air pollution that is reasonably anticipated to endanger public health or welfare (Clean Air Act sections 108 and 109). In 1979, we promulgated the 1-hour ground-level ozone standard of 0.12 parts per million (ppm) (120 parts per billion (ppb)). 44 FR 8202 (February 8, 1979).

Ground-level ozone is not emitted directly by sources. Rather, Volatile Organic Compounds (VOC) and Nitrogen Oxides (NO_X), emitted by a wide variety of sources, react in the presence of sunlight to form ground-level ozone. NO_X and VOC are referred to as precursors of ozone.

Ozone formation is accelerated or enhanced under certain meteorological conditions, such as high temperatures and low wind speeds. Higher ozone concentrations occur downwind of areas with relatively high VOC and NO_X concentrations or in areas subject to relatively high background ozone and ozone precursor concentrations (ozone and ozone precursors entering an area as the result of transport from upwind source areas).

VOC emissions are produced by a wide variety of sources, including stationary and mobile sources. Significant stationary sources of VOC include industrial solvent usage, various coating operations, industrial and utility combustion units, petroleum and oil storage and marketing operations, chemical manufacturing operations, personal solvent usage, etc. Significant mobile sources of VOC include on-road vehicle usage and off-road vehicle and engine usage, such as farm machinery, aircraft, locomotives, and motorized lawn care and garden implements.

NO_X emissions are produced primarily through combustion processes, including industrial and utility boiler use, process heaters and furnaces, and on-road and off-road mobile sources.

An area exceeds the 1-hour ozone standard each time an ambient air quality monitor records a 1-hour average ozone concentration above 124 ppb in any given day (only the highest 1-hour ozone concentration at the monitor during any 24 hour day is considered when determining the number of exceedance days at the monitor). An area violates the ozone standard if, over a consecutive 3-year period, more than 3 days of exceedances are expected to occur at any monitor in the area. 40 CFR Part 50, App. H.

The highest of the fourth-highest daily peak ozone concentrations over the 3 year period at any monitoring site in the area is called the ozone design value for the area. The Act, as amended in 1990, required EPA to designate as nonattainment any area that was violating the 1-hour ozone standard, generally based on air quality monitoring data from the 1987 through 1989 period. Clean Air Act section 107(d)(4); 56 FR 56694 (November 6, 1991). The Act further classified these areas, based on the areas' ozone design values, as marginal, moderate, serious, severe, or extreme.

The control requirements and date by which attainment is to be achieved vary with an area's classification. Marginal areas were subject to the fewest mandated control requirements and had the earliest attainment date, November 15, 1993. Severe and extreme areas are subject to more stringent planning requirements but are provided more time to attain the standard. Moderate areas were required to attain the 1-hour standard by November 15, 1996. Serious areas were required to attain by November 15, 1999, and severe areas are required to attain by November 15, 2005 or November 15, 2007, depending on the areas' ozone design values for 1987 through 1989. The DFW ozone nonattainment area was initially classified as ''moderate'' (56 FR 56694) with an attainment date of November 15, 1996. Since the area did not attain the standard by November 15, 1996, we reclassified the area to ''serious'' on March 20, 1998 (63 FR 8128). The statutory attainment date for a serious area is November 15, 1999. The DFW ozone nonattainment area contains Dallas, Tarrant, Collin, and Denton Counties (40 CFR 81.314 and 81.326).

The specific requirements of the Act for serious ozone nonattainment areas are found in part D, section 182(c) of the Act. Section 172 in part D provides the general requirements for nonattainment plans. Section 172(c)(6) and section 110 require SIPs to include enforceable emission limitations, and such other control measures, means or techniques as well as schedules and timetables for compliance, as may be necessary to provide for attainment by the applicable attainment date. Section 172(c)(1) requires the implementation of all reasonably available control measures as expeditiously as practicable and requires the SIP to provide for attainment of the NAAQS. Section 182(b)(1)(A) requires the SIP to provide for a 15% Rate of Progress Plan and also provide for specific annual reductions in emissions of VOC and NO_X ''as necessary to attain'' the ozone NAAQS by the applicable attainment date. Our ''General Preamble for the Implementation of Title I of the Clean Air Act Amendments of 1990'' (57 FR 13498 dated April 16, 1992) provides the interpretive basis for EPA's rulemakings under the nonattainment plan provisions of the Act (General Preamble). Section 182(c)(2)(A) requires that a serious area use photochemical grid modeling or any other methods judged by us to be at least as effective, to demonstrate attainment of the ozone NAAQS by the applicable attainment date. In the General Preamble, we provide that this requirement for demonstrating attainment may be met by the use of EPA-approved modeling techniques.

Section 182(c)(2)(B) of the Act requires each serious and above ozone nonattainment area to submit a SIP revision by November 15, 1994, which describes, in part, how the area will

achieve an actual volatile organic compound (VOC) (and NO_X if required) emission reduction from the baseline emissions of at least 3 percent of baseline emissions per year averaged over each consecutive 3-year period beginning 6 years after enactment (*i.e.,* November 15, 1996) until the area's attainment date. The plan providing for the reduction between November 1996 and November 1999 is referred to as the 9% Plan, the Post-1996 ROP Plan. As part of today's proposal, we are proposing action on the 15% ROP Plan, the 9% ROP Plan, and the attainment demonstration SIP revision submitted by the State of Texas for the DFW serious ozone nonattainment area.

B. Dates of State's SIP Submissions

As a result of the reclassification to serious, the State was required to submit both an attainment demonstration SIP with an attainment date of November 15, 1999; and a Rate of Progress SIP covering the years from November 15, 1996 to November 15, 1999. The State submitted those SIPs on March 19, 1999. The State had previously submitted the moderate area 15% ROP plan on August 8, 1996, before the area was reclassified to serious. The 15% plan was given conditional, interim approval.

Our review showed that the attainment demonstration SIP submitted in 1999 did not contain a control strategy or adopted measures to implement the strategy and the 1999 Post-1996 ROP SIP did not achieve the required 9% reduction in emissions for the time period. Therefore, we found both SIPs incomplete and started sanctions and Federal Implementation plan (FIP) clocks effective May 13, 1999.

A new Post-1996 ROP SIP was submitted October 25, 1999, and was found complete on December 16, 1999, since the new plan contained additional VOC reductions to meet the 9% requirement. The new attainment demonstration SIP was submitted April 25, 2000, and was found complete on June 23, 2000, because it contained a modeled control strategy and adopted regulations to implement the strategy. These two completeness findings stopped the sanctions clocks. The FIP clock continues to run unless and until we approve the 9% ROP Plan and the Attainment Demonstration SIP. Section 110(c)(1)(A) requires EPA to promulgate a FIP for the DFW nonattainment area by May 14, 2001 if we have not approved the SIPs by that time.

C. General Requirements for an Attainment Demonstration and its Motor Vehicle Emissions Budgets

In general, an attainment demonstration SIP includes a modeling analysis showing how an area will achieve the standard by its attainment date and the emission control measures necessary to achieve attainment. The attainment demonstration SIP must include MVEBs for transportation conformity purposes. Transportation conformity is a process required by Section 176(c) of the Act for ensuring that the effects of emissions from all on-road sources are consistent with attainment of the standard. Ozone attainment demonstrations must include the estimates of motor vehicle VOC and NO_X emissions that are consistent with attainment, which then act as a budget or ceiling for the purposes of determining whether transportation plans, programs, and projects conform to the attainment SIP.

D. Ozone Transport Policy and Attainment Date Extensions

The DFW area is classified as serious and, therefore, was required to attain the 1-hour ozone standard by November 15, 1999. The State of Texas, in submitting the April 2000 attainment demonstration SIP, requests an extension of the attainment date to November 15, 2007, based on our July 1998 transport policy.

In developing the attainment demonstration for DFW, the State makes the case that the 1998 Transport Policy is particularly relevant to DFW, which is downwind of the HGA area, and that the DFW area is affected by transport from HGA. If we approve of such a determination for DFW, the area would have until no later than November 15, 2007, the attainment date for HGA, to attain the 1-hour ozone standard.

In the DFW ozone attainment demonstration SIP reviewed here, the State also relies, in part, on regional and statewide NO_X emission reductions in Texas, including the upwind HGA area and eastern and central Texas. The SIP also relies on NO_X reductions from the NO_X SIP Call States where appropriate.

Attainment Demonstration SIPs were originally due November 1994. However, through a series of policy memoranda, we recognized that States had not submitted these attainment demonstrations and were constrained to do so until ozone transport had been further analyzed. One of the policy memoranda addressing the issue of ozone transport is the transport policy issued by us July 16, 1998, entitled ''Extension of Attainment Dates for Downwind Transport Areas''. That memorandum included our interpretation of the Act regarding the extension of attainment dates for ozone nonattainment areas that have been classified as moderate or serious for the 1-hour ozone standard and which are downwind of areas that have interfered with their ability to demonstrate attainment of the ozone standard by dates prescribed in the Act. That memorandum stated that we will consider extending the attainment date for an area or a State that:

(1) Has been identified as a downwind area affected by transport from either an upwind area in the same State with a later attainment date or an upwind area in another State that significantly contributes to downwind ozone nonattainment;

(2) Has submitted an approvable attainment demonstration with any necessary, adopted local measures and with an attainment date that shows it will attain the 1-hour standard no later than the date that the emission reductions are expected from upwind areas under the final NO_X SIP call and/or the statutory attainment date for upwind nonattainment areas, *i.e.,* assuming the boundary conditions reflecting those upwind emission reductions;

(3) Has adopted all applicable local measures required under the area's current ozone classification and any additional emission control measures demonstrated to be necessary to achieve attainment, assuming the emission reductions occur as required in the upwind areas; and

(4) Has provided that it will implement all adopted measures as expeditiously as practicable, but no later than the date by which the upwind reductions needed for attainment will be achieved.

Once an area receives an extension of its attainment date based on ozone/precursor transport impacts, the area would no longer be subject to reclassification to a higher ozone nonattainment classification based on its original attainment date. If the DFW area is granted an attainment date extension, it would no longer be subject to a reclassification to severe nonattainment for ozone and no longer subject to the additional emission control requirements that would result from the reclassification to severe nonattainment based on a failure to attain by its original attainment date.

Texas has requested an extension of the attainment date for the DFW nonattainment area in conjunction with the ozone attainment demonstration submittals. The ozone attainment

demonstration SIP uses November 15, 2007 as the ozone attainment date. The chosen 2007 attainment date reflects the statutory attainment date for the HGA area, as the DFW area is downwind of the HGA area and is affected by transport from HGA.

V. Administrative Requirements

Under Executive Order 12866 (58 FR 51735, October 4, 1993), this proposed action is not a ''significant regulatory action'' and therefore is not subject to review by the Office of Management and Budget. This proposed action merely approves state law as meeting federal requirements and imposes no additional requirements beyond those imposed by state law. Accordingly, the Administrator certifies that this proposed rule will not have a significant economic impact on a substantial number of small entities under the Regulatory Flexibility Act (5 U.S.C. 601 *et seq.*). Because this rule proposes to approve pre-existing requirements under state law and does not impose any additional enforceable duty beyond that required by state law, it does not contain any unfunded mandate or significantly or uniquely affect small governments, as described in the Unfunded Mandates Reform Act of 1995 (Pub. L. 104–4). For the same reason, this proposed rule also does not significantly or uniquely affect the communities of tribal governments, as specified by Executive Order 13084 (63 FR 27655, May 10, 1998). This proposed rule will not have substantial direct effects on the States, on the relationship between the national government and the States, or on the distribution of power and responsibilities among the various levels of government, as specified in Executive Order 13132 (64 FR 43255, August 10, 1999), because it merely approves a state rule implementing a federal standard, and does not alter the relationship or the distribution of power and responsibilities established in the Clean Air Act. This proposed rule also is not subject to Executive Order 13045 (62 FR 19885, April 23, 1997), because it is not economically significant.

In reviewing SIP submissions, EPA's role is to approve state choices, provided that they meet the criteria of the Clean Air Act. In this context, in the absence of a prior existing requirement for the State to use voluntary consensus standards (VCS), EPA has no authority to disapprove a SIP submission for failure to use VCS. It would thus be inconsistent with applicable law for EPA, when it reviews a SIP submission, to use VCS in place of a SIP submission that otherwise satisfies the provisions of the Clean Air Act. Thus, the requirements of section 12(d) of the National Technology Transfer and Advancement Act of 1995 (15 U.S.C. 272 note) do not apply. The proposed rule does not involve special consideration of environmental justice related issues as required by Executive Order 12898 (59 FR 7629, February 16, 1994). As required by section 3 of Executive Order 12988 (61 FR 4729, February 7, 1996), in issuing this proposed rule, EPA has taken the necessary steps to eliminate drafting errors and ambiguity, minimize potential litigation, and provide a clear legal standard for affected conduct. The EPA has complied with Executive Order 12630 (53 FR 8859, March 15, 1988) by examining the takings implications of the rule in accordance with the ''Attorney General's Supplemental Guidelines for the Evaluation of Risk and Avoidance of Unanticipated Takings'' issued under the executive order. This proposed rule does not impose an information collection burden under the provisions of the Paperwork Reduction Act of 1995 (44 U.S.C. 3501 *et seq.*).

List of Subjects in 40 CFR Part 52

Environmental protection, Air pollution control, Attainment, Hydrocarbons, Nitrogen oxides, Ozone, Reporting and recordkeeping requirements.

Authority: 42 U.S.C. 7401 *et seq.*

Dated: January 4, 2001.

Gregg A. Cooke,

Regional Administrator, Region 6.

[FR Doc. 01–1346 Filed 1–17–01; 8:45 am]

BILLING CODE 6560–50–P

ENVIRONMENTAL PROTECTION AGENCY

40 CFR Part 123

[FRL–6933–3]

Water Pollution Control; Program Modification Application by South Dakota To Administer the Sludge Management (Biosolids) Program

AGENCY: Environmental Protection Agency (EPA).

ACTION: Proposed rule; second notice of application and public comment period.

SUMMARY: The State of South Dakota has submitted an application to EPA to revise the existing South Dakota Pollutant Discharge Elimination System (SDPDES) program to include administration and enforcement of the sludge management (biosolids) program. According to the State's proposal dated March 23, 1998, this program would be administered by the South Dakota Department of Environment and Natural Resources (SDDENR).

The application was described in a **Federal Register** notice dated October 5, 2000 (65 FR 59385) and in notices published in the Rapid City Journal and the Sioux Falls Argus-Leader on October 20, 2000. Notices were mailed to persons known to be interested in such matters, including all persons on appropriate State and EPA mailing lists and all permit holders and applicants within the State. There were no comments received during the public comment period. The **Federal Register** notice provided for a 45–day comment period but did not state that a public hearing could be requested and would be considered by EPA. Therefore, EPA is extending the public comment period.

The application from South Dakota is complete and is available for inspection and copying. EPA has reviewed the State's request for delegation for completeness and adequacy and has found that the proposal meets Federal equivalency regulations.

DATES: Comments on this proposed rule received on or before March 5, 2001 will be considered before issuing a final rule. Comments postmarked after this date may not be considered.

ADDRESSES: You can view and copy South Dakota's application for modification from 8:00 a.m. until 5:00 p.m. Monday through Friday, excluding holidays, at the South Dakota Department of Environment and Natural Resources; Joe Foss Building, Pierre, South Dakota or at the EPA Regional Office at 999 18th Street, Denver, Colorado. Requests for copies should be addressed to Kelli Buscher, South Dakota Department of Environment and Natural Resources at the above address or at telephone number 605–773–3351. (There will be a $15 charge for copies.) Electronic comments are encouraged and should be submitted to brobst.bob@epa.gov or send written comments to Robert Brobst, U.S. EPA/8P–WP, 999 18th Street, Suite 300, Denver, Colorado 80202–2466.

FOR FURTHER INFORMATION CONTACT: Robert Brobst at the above address by phone at (303) 312–6129, or by e-mail at *brobst.bob@epa.gov.*

SUPPLEMENTARY INFORMATION: Section 405 of the Clean Water Act (CWA), 33 U.S.C. Section 1345, created the sludge management program, allowing EPA to issue permits for the disposal of sewage sludge under conditions required by the CWA. Section 405(c) of the CWA provides that a state may submit an

application to EPA for administering its own program for issuing sewage sludge permits within its jurisdiction. EPA is required to approve each such submitted state program unless EPA determines that the program does not meet the requirements of Sections 304(i) and/or 402(b) of the CWA or the EPA regulations implementing those sections.

South Dakota's application for sludge management program approval contains a letter from the Governor requesting program approval, an Attorney General's Statement, copies of pertinent State statutes and regulations, amendments to the SDPDES Program Description, and amendments to the SDDENR/EPA Memorandum of Agreement (MOA) executed by the Regional Administrator, Region 8, EPA, and the Secretary, Department of Environment and Natural Resources.

The State of South Dakota has existing environmental self-evaluation laws and rules. These provide evidentiary privilege and limited immunity for certain disclosures made in an environmental self-evaluation. SDCL section 1–40–35 provides that no privilege or immunity exists for information required to be collected, developed, maintained, or reported to the department according to State law, rule, regulation, or permit.

South Dakota has incorporated Federal sludge management regulations by reference into its State rules. These rules require record keeping and reporting for certain technical monitoring and assessment, management practices, and certain certifications of compliance. Because these requirements and any requirement in sludge permits would be excluded from the self-evaluation privilege, EPA believes that South Dakota has the authority necessary to administer the sludge management program to assure protection of public health and the environment, and invites comment on this issue.

EPA discussed the SDDENR program application with the South Dakota Office of the U.S. Fish and Wildlife Service and received their concurrence dated June 29, 2000 stating that the proposed program authorization was unlikely to jeopardize the continued existence of any endangered species or threatened species, or result in the destruction or adverse modification of habitat of such species.

By Letter dated October 20, 1999, EPA discussed the program application with the South Dakota State Historic Preservation Officer and received concurrence by letter dated November 5, 1999. The State Historic Preservation Officer determined that no historic properties would be affected by the addition of the biosolids program.

What are biosolids? Biosolids are, in effect, a slow release nitrogen fertilizer with low concentrations of other plant nutrients. In addition to significant amounts of nitrogen, biosolids also contain phosphorus, potassium, and essential micronutrients such as zinc and iron. Many western soils are deficient in micronutrients. Biosolids are rich in organic matter that can improve soil quality by improving water holding capacity, soil structure and air and water transport. Proper use of biosolids can ultimately decrease topsoil erosion. When applied at agronomic rates (the rates at which plants require nitrogen during a defined growth period), biosolids provide an economic benefit in addition to their environmental benefits.

How do biosolids differ from sewage sludge? Most simply, biosolids is the new name for what had previously been referred to as sewage sludge. Biosolids are primarily treated organic solids at wastewater treatment plants—with the emphasis on the word treated—that are suitable for recycling as a soil amendment. Sewage sludge now refers to untreated primary and secondary organic solids. This differentiates biosolids that have received stabilization treatment at a municipal wastewater treatment plant from other types of existing sludge (such as oil and gas field wastes) that cannot be beneficially recycled as soil amendments.

What are the traditional practices in this region? Until 25 years ago, the traditional practice in this Region was to landfill or incinerate what was then called sewage sludge. During the past quarter century the practice changed to recycling biosolids as soil amendments. States in Region 8 recycle 85% of the biosolids generated in the six state Region.

What Are the Federal Requirements?

The EPA in 1993 set forth requirements for management of all biosolids generated during the process of treating municipal wastewater, commonly called the 503 rule. The 503 rule encourages the beneficial reuse of biosolids, and establishes strict standards under which wastewater residuals can be beneficially recycled as soil amendments. The EPA believes that biosolids are an important resource that can and should be safely recycled. The 503 rule is designed to protect public health and the environment. Most of the requirements were based on the results of extensive multimedia risk assessment and on more that 25 years of independent research. The 503 rule establishes standards for pathogen destruction and for levels of metals that can be present in biosolids. It also governs the agricultural practices, site restrictions, and crop harvesting restrictions and the stability of the materials by reducing the attraction of disease vectors (such as flies).

Indian Country

South Dakota is not authorized to carry out its Biosolids program in Indian Country, as defined in 18 U.S.C. 1151. This includes, but is not limited to: Lands within the exterior boundaries of the following Indian reservations located within the State of South Dakota:

A. Cheyenne River Indian Reservation,
B. Crow Creek Indian Reservation,
C. Flandreau Indian Reservation,
D. Lower Brule Indian Reservation,
E. Pine Ridge Indian Reservation,
F. Rosebud Indian Reservation,
G. Standing Rock Indian Reservation, and
H. Yankton Indian Reservation.

EPA held a public hearing on December 2, 1999, in Badlands National Park, South Dakota, and accepted public comments on the question of the location and the extent of Indian Country within the State of South Dakota. In a forthcoming **Federal Register** notice, EPA will respond to the comments that have been received and more specifically identify Indian Country areas in the State of South Dakota.

Public Notice Procedures

Copies of all submitted statements and documents shall become a part of the record submitted to EPA. All comments or objections presented in writing to EPA Region 8 and postmarked within 45 days of this notice will be considered by EPA before it takes final action on South Dakota's request for program modification approval. All written comments and questions regarding the sludge management program should be addressed to Robert Brobst at the above address. The public is also encouraged to notify anyone who may be interested in this matter. A public hearing may be requested. A public hearing will be held if response to this notice indicates significant public interest.

EPA's Decision

EPA will consider and respond to all significant comments received before taking final action on South Dakota's request for Sludge program approval. If no substantial comments are received,

EPA will approve South Dakota's sludge management program. The decision will be based on the requirements of Sections 405, 402 and 304(i) of the CWA and EPA regulations promulgated thereunder.

If the South Dakota program modifications are approved, EPA will so notify the State and anyone who has submitted significant comments. Notice will be published in the **Federal Register** and, as of the date of program approval, EPA will suspend issuance of federal NPDES sludge management permits in South Dakota (except, as discussed above, for those dischargers in ''Indian Country''). The State's program will operate in lieu of the EPA-administered program. However, EPA will retain the right, among other things, to object to SDNPDES permits proposed by South Dakota and to take enforcement actions for violations, as allowed by the CWA.

If EPA disapproves South Dakota's sludge management program, EPA will notify the State and anyone who submitted significant comments of the reasons for disapproval and of any revisions or modifications to the State program that are necessary to obtain approval.

Regulatory Flexibility Act

Based on General Counsel Opinion 78–7 (April 18, 1978), EPA has long considered a determination to approve or deny a State NPDES program submission to constitute an adjudication because an ''approval,'' within the meaning of the Administrative Procedure Act (APA), constitutes a ''licence,'' which, in turn, is the project of an ''adjudication.'' For this reason, the statutes and Executive Orders that apply to rulemaking action are not applicable here. Among these are provisions of the Regulatory Flexibility Act (RFA), 5 U.S.C. 601 *et seq.* Under the RFA, whenever a Federal agency proposes or promulgates a rule under section 553 of the APA, after being required by that section or any other law to publish a general notice of proposed rulemaking, the Agency must prepare a regulatory flexibility analysis for the rule, unless the Agency certifies that the rule will not have a significant economic impact on a substantial number of small entities. If the Agency does not certify the rule, the regulatory flexibility analysis must describe an assess the impact of a rule on small entities affected by the rule.

Even if the NPDES program approval were a rule subject to the FRA, the Agency would certify that approval of the State proposed SDPDES program would not have a significant economic impact on a substantial number of small entities. EPA's action to approve an NPDES program merely recognizes that the necessary elements of an NPDES program have already been enacted as a matter of State law; it would, therefore, impose no additional obligation upon those subject to the State's program. Accordingly, the Regional Administrator would certify that this program, even if a rule, would not have significant economic impact on a substantial number of small entities.

Unfunded Mandates Reform Act

Title II of the Unfunded Mandates Reform Act of 1995 (UMRA), Public Law 104–4, establishes requirements for Federal agencies to assess the effects of their regulatory actions on State, local, and tribal governments and the private sector. Under section 202 of the UMRA, EPA generally must prepare a written statement, including a cost-benefit analysis, for proposed and final rules with ''Federal mandates'' that may result in expenditures to State, local, and tribal governments, in the aggregate, or to the private sector, of $100 million or more in any one year. Before promulgating an EPA rule for which a written statement is needed, section 205 of the UMRA generally requires WPA to identify and consider a reasonable number of regulatory alternatives and adopt the least costly, most cost-effective or least burdensome alternative that achieves the objectives of the rule. The provisions of section 205 do not apply when they are inconsistent with applicable law. Moreover, section 205 allows EPA to adopt an alternative other than the least costly, most cost-effective or lease burdensome alternative if the Administrator publishes with the final rule an explanation why that alternative was not adopted. Before EPA establishes any regulatory requirements that may significantly or uniquely affect small governments, including tribal governments, it must have developed under section 203 of the UMRA a small government agency plan. The plan must provide for notifying potentially affected small governments, enabling officials of affected small governments to have meaningful and timely input in the development of EPA regulatory proposals with significant Federal intergovernmental mandates, and informing, educating, and advising small governments on compliance with the regulatory requirements.

Today's decision includes no Federal mandates for State, local or tribal governments or the private sector. The Act excludes from the definition of a ''Federal mandate'' duties that arise from participation in a voluntary Federal program, except in certain cases where a ''federal intergovernmental mandate'' affects an annual federal entitlement program of $500 million or more which are not applicable here. South Dakota's request for approval of its budget management program is voluntary and imposes no Federal mandate within the meaning of the Act. Rather, by having its sludge management program approved, the State will gain the authority to implement the program within its jurisdiction, in lieu of EPA, thereby eliminating duplicative State and Federal requirements. If a State chooses not to seek authorization for administration of a sludge management program, regulation is left to EPA.

EPA's approval of state programs generally may reduce compliance costs for the private sector, since the State, by virtue of the approval, may now administer the program in lieu of EPA and exercise primary enforcement. Hence, owners and operators of sludge management facilities or businesses generally no longer face dual Federal and State compliance requirements, thereby reducing overall compliance costs. Thus, today's decision is not subject to the requirements of sections 202 and 205 of the UMRA.

The Agency recognizes that small governments may own and/or operate sludge management facilities that will become subject to the requirements of an approved State sludge management program. However, small governments that own and/or operate sludge management facilities are already subject to the requirements in 40 CFR parts 123 and 503 and are not subject to any additional significant or unique requirements by virtue of this program approval. Once EPA authorizes a State to administer its own sludge management program and any revisions to that program, these same small governments will be able to own and operate their sludge management facilities or businesses under the approved State program, in lieu of the Federal program. Therefore, EPA has determined that this document contains no regulatory requirements that might significantly or uniquely affect small governments.

Dated: January 4, 2001.

William P. Yellowtail,

Regional Administrator, Region 8.

[FR Doc. 01–1347 Filed 1–17–01; 8:45 am]

BILLING CODE 6560–50–P

DEPARTMENT OF COMMERCE

National Telecommunications and Information Administration

47 CFR Part 301

[Docket No. 001206341–0341–01]

RIN 0660–AA14

Mandatory Reimbursement Rules for Frequency Band or Geographic Relocation of Federal Spectrum-Dependent Systems

AGENCY: National Telecommunications and Information Administration, Commerce.

ACTION: Notice of proposed rulemaking.

SUMMARY: The National Telecommunications and Information Administration (NTIA) proposes to amend its regulations to set forth the rules governing reimbursement to Federal entities by the private sector as a result of reallocation of frequency spectrum. This action is necessary to provide spectrum for future commercial wireless communications service and to compensate the Federal Government for the costs incurred in making that spectrum available.

DATES: Submit comments on or before March 19, 2001. Reply comments are due April 18, 2001.

ADDRESSES: The public is invited to submit written comments in paper or electronic form. Comments may be mailed to Milton Brown, Office of the Chief Counsel, National Telecommunications and Information Administration (NTIA), Room 4713, U.S. Department of Commerce, 1401 Constitution Avenue, N.W., Washington, DC 20230. Paper submissions should include a version on diskette in ASCII, Word Perfect (please specify version), or Microsoft Word (please specify version) format. Comments may be viewed on NTIA's website at http://www.ntia.doc.gov.

Comments submitted in electronic form may be sent to reimbursement@ntia.doc.gov. Electronic comments should be submitted in the formats specified above.

FOR FURTHER INFORMATION CONTACT: Milton Brown, NTIA, (202) 482–1816.

SUPPLEMENTARY INFORMATION:

Authority: 47 U.S.C. 921, *et seq.* (Supp. V. 1993); Strom Thurmond National Defense Authorization Act for FY 1999, Pub. L. No. 105–261, 112 Stat. 1920 (1998); 47 U.S.C. 923(g).

I. Introduction

1. NTIA is the executive branch agency principally responsible for developing and articulating domestic and international telecommunications policy. NTIA acts as the principal advisor to the President on telecommunications policies pertaining to the Nation's economic and technological advancement and to the regulation of the telecommunications industry. NTIA is also responsible for managing the Federal Government's use of the radio spectrum. The Federal Communications Commission (FCC), an independent agency of the Federal Government, manages electromagnetic spectrum used by the private sector, including state and local governments. With the proliferation of radio-based technologies, management and use of the radio spectrum has become increasingly complex. Federal agencies are extremely dependent on spectrum access to provide a wide variety of critical services to the American people. Congress has found that telecommunications and information are vital to the public welfare, national security, and competitiveness of the United States, and that technological advances in the telecommunications and information fields make it imperative that the United States maintain effective national and international policies and programs capable of taking advantage of these continued advancements.[1]

II. Background

2. On August 10, 1993, Title VI of the Omnibus Budget Reconciliation Act of 1993 (OBRA 93) was signed into law.[2] OBRA 93 authorized the FCC to use competitive bidding (auctions) for the reassignment and licensing of spectrum frequencies for certain commercial services. OBRA 93 also directed the Secretary of Commerce to transfer at least 200 megahertz (MHz) of spectrum below 5 gigahertz (GHz) from Federal agencies to the FCC for licensing to the private sector. Pursuant to OBRA 93, NTIA identified Federal bands for reallocation totaling 235 MHz from the Federal Government to non-Government use in its February 1995 Spectrum Reallocation Final Report.[3]

3. Title III of the Balanced Budget Act of 1997 (BBA 97) required the Secretary of Commerce to identify an additional 20 MHz below 3 GHz for reallocation to non-Federal users.[4] In response to this directive, NTIA issued a Spectrum Reallocation Report in February 1998 which identified the additional bands for reallocation.[5] BBA 97 directed the FCC to auction the 20 MHz by 2002 and the 1710–1755 band identified in the 1995 Spectrum Reallocation Final Report after January 1, 2001.[6]

4. In 1998, Congress passed the Strom Thurmond National Defense Authorization Act for Fiscal Year 1999 (the Act).[7] This legislation sought to encourage the transfer of electromagnetic spectrum from Federal government to private use by authorizing Federal entities to accept compensation payments when they relocate or modify their frequency use to accommodate non-Federal users of the spectrum.[8] Indeed the Act requires ''any person on whose behalf a Federal entity incurs costs'' pursuant to frequency spectrum relocation or modification ''to compensate the Federal entity in advance'' for the entity's modification or relocation expenses.[9] The Act also references various expenses associated with frequency relocation or modification that qualify for reimbursement including ''the costs of any modification, replacement, or re-issuance of equipment, facilities, operating manuals, or regulations incurred by that entity.''[10] Moreover, the Act requires the Federal entity to notify NTIA of the ''marginal costs anticipated to be associated with such relocation or with the modifications necessary to accommodate prospective licensees.''[11]

5. The Act directs NTIA and the FCC to ''develop procedures for the implementation of [relocation] which * * * shall include a process for resolving any differences that arise between the Federal Government and commercial licensees regarding

[1] See National Telecommunications and Information Administration Organization Act, 47 U.S.C. 901 (b)(1)–(2).

[2] Pub. L. 103–66, 107 Stat. 31 (1993).

[3] See National Telecommunications and Information Administration, U.S. Department of Commerce, NTIA Special Publication 94–27, *Spectrum Reallocation Final Report* (Feb. 1995).

[4] Pub. L. 105–33, 111 Stat. 251 (1997).

[5] See National Telecommunications and Information Administration, U.S. Department of Commerce, NTIA Special Publication 98–36, Spectrum Reallocation Report (Feb. 1998).

[6] *See* note 4 *supra* at section 3002(b). Of the 20 MHz of spectrum, eight (8) MHz (i.e., 139–140.5 MHz, 141.5–143 MHz and 1385–1390 MHz bands) were subsequently reclaimed by the Federal Government in accordance with the National Defense Authorization Act for Fiscal Year 2000, See Pub. L. 106–65, 113 Stat. 512 (1999).

[7] Pub. L. 105–261, 112 Stat. 1920 (1998) (amending section 113(g) of the NTIA Organization Act (codified at 47 U.S.C. 923(g)).

[8] See 47 U.S.C. 923(g)(1)(A). ''Federal entity'' is defined as ''any department, agency, or other instrumentality of the Federal Government that utilizes a Government station license obtained under section 305 of the 1934 Act (47 U.S.C. 305).'' 47 U.S.C. 923(i).

[9] See 47 U.S.C. 923(g)(1)(B).

[10] See 47 U.S.C. 923(g)(1)(A).

[11] Id.

estimates of relocation or modification costs.'' [12]

6. These proposed rules provide a procedure for Federal entities to receive reimbursement for the relocation or modification expenses that they incur as a result of the reallocation of radio spectrum mandated by OBRA 93, BBA 97, and future reallocations. As such, these proposed rules address reimbursement issues associated with the relocation or modification of frequency spectrum that have been reallocated. The proposed rules do not apply to issues involving the reallocation of frequency spectrum. These proposed rules provide a mechanism for the Federal entities to submit estimates of the costs to relocate. The proposed rules direct NTIA to solicit estimates of the costs of relocation from the affected Federal entities, and provide that information to the FCC at least 180 days prior to an auction.[13]

7. The proposed rules also provide procedures for the successful bidder to make payment to the Federal entity after an auction. Pursuant to direction from Congress, the proposed rules also include a process for resolving differences that arise between the Federal Government and the successful bidder regarding estimates of relocation or modification of costs. To the extent that a successful bidder disagrees with a Federal entity's estimated relocation costs, the proposed rules provide for a mandatory negotiation and/or third-party mediation period. If the parties do not agree to relocation costs within the mandatory negotiation period, the parties must enter into a non-binding arbitration program.

8. As required by section 603 of the Regulatory Flexibility Act, 5 U.S.C. 603, NTIA has prepared an Initial Regulatory Flexibility Analysis (IRFA) of the expected impact on small entities of the proposals suggested in this document. The IRFA is set forth in the Regulatory Flexibility Analysis section of these proposed rules. Written public comments are requested on the IRFA. These comments must be filed in accordance with the same filing deadlines as comments filed in this Notice of Proposed Rulemaking (NPRM), but they must have a separate and distinct heading designating them as responses to the IRFA. NTIA shall send a copy of this NPRM, including the IRFA, to the Chief Counsel for Advocacy of the Small Business Administration in accordance with section 603(a) of the Regulatory Flexibility Act, 5 U.S.C. 603(a).

III. Discussion

9. These proposed rules have been developed to ensure that the Federal Government is fully reimbursed for the expenses it incurs in retuning, modifying or relocating a system as a result of reallocation. To the extent that there are other ways to accomplish this goal, NTIA will entertain comments from interested parties.

Affected Bands

10. Pursuant to OBRA 93, NTIA identified 235 MHz of Federal Government spectrum for transfer to the private sector.[14] Similarly, NTIA identified another 20 MHz of spectrum for reallocation to the private sector as mandated by the BBA 97.[15] The table below shows the specific frequency bands reallocated from Federal Government use to the private sector as a result of the legislation and Federal Government action.

REALLOCATED FREQUENCY BANDS FROM THE FEDERAL GOVERNMENT TO THE PRIVATE SECTOR

Freq. band (MHz)	Legislation	Bandwidth (MHz)	Schedule
1390–1400	OBRA–93	10	January 1999
1427–1432	OBRA–93	5	January 1999
1670–1675	OBRA–93	5	January 1999
1710–1755	OBRA–93	45	January 2004 [16]
2300–2310	OBRA–93	10	August 1995
2390–2400	OBRA–93	10	February 1995
2400–2402	OBRA–93	2	August 1995
2402–2417	OBRA–93	15	February 1995
2417–2450	OBRA–93	33	August 1995
3650–3700	OBRA–93	50	January 1999
4940–4990	OBRA–93 [17]	50	January 1997
216–220	BBA–97	4	January 2002
1432–1435	BBA–97	3	January 1999
2385–2390	BBA–97	5	January 2005

11. On October 17, 1998, the President signed into law the Strom Thurmond National Defense Authorization Act for Fiscal Year 1999, which among other things, amended the NTIA Organization Act to require private sector entities to reimburse Federal users for relocations due to reallocation of spectrum assignments.[18] The Act also sets forth which spectrum would be the subject of the mandatory reimbursement rules: the 1710–1755 MHz band from the first reallocation report, the 20 MHz identified in the second reallocation report, and any future reallocations.[19] The affected frequency bands that currently qualify for reimbursement under the proposed rule include the following:

[12] See 47 U.S.C. 923(g)(1)(E).

[13] We note that the FCC will notify potential bidders prior to the auction of the estimated relocation costs submitted by the Federal entities for the affected bands.

[14] See note 3, supra. The Federal Government, however, later reclaimed fifty (50) MHz of this spectrum (*i.e.*, 4635–4685 MHz) and substituted 4940–4990 MHz in its place. See 47 U.S.C. 924(b), 926; see also Letter from Larry Irving, Assistant Secretary for Communications and Information, U.S. Department of Commerce, to William E. Kennard, Chairman, Federal Communications Commission (March 30, 1999) (notifying FCC of reclamation and substitutiuon of spectrum).

[15] See note 5, supra.

[16] The NTIA Spectrum Reallocation Final Report provided for early reallocation band (*i.e.*, 1999) for the top 25 major cities in the United States with the private sector reimbursing the Federal users. Subsequently, Title III of BBA 97 (entitled ''Communications and Spectrum Allocation Provisions'') provides for the reallocation of this band for competitive bidding commencing after January 1, 2001.

[17] See note 14, supra.

[18] See note 7, supra.

[19] See note 6, supra.

Bands That Qualify for Reimbursement

216–220 MHz
1432–1435 MHz
1710–1755 MHz
2385–2390 MHz

12. We seek comment on the affected bands identified above. Future bands that qualify for reimbursement will be identified via a public notice and request for comment.

Mandatory Relocation

13. DOBRA 93 and BBA 97 require NTIA to identify spectrum for reallocation to exclusive non-Government uses. Moreover, Section 3002 of BBA 97 amended the NTIA Organization Act to add a subsection to encourage Federal entities to relocate Government stations from the bands identified in any reallocation report through means of these reimbursement requirements or any other provision of law to ''maximize[ ] the spectrum available for non-Federal use.'' [20] Nevertheless, in some cases, it may be technically possible for incumbent Federal entities to continue to share the reallocated spectrum with the new commercial licensees. We seek comment on whether these Federal entities should be required to relocate in those cases where sharing is technically possible. If not, we seek comment on the conditions whereby such Federal entities should be permitted to remain in the band and who would pay for any system modification that would enhance spectrum sharing. For example, because the spectrum will be reallocated to exclusive non-Government uses as required by DOBRA 93 or BBA 97, should such a Federal entity be permitted to remain in the band only on a non-interference basis after the appropriate regulatory approvals have been obtained?

14. We also solicit comment on whether a Federal entity should be entitled to reimbursement of relocation costs if it relocates to a landline communications system or commercial radio services.[21] We note that such an option may provide the most spectrum efficient and cost-effective alternative to a government-exclusive radio frequency system consistent with policy directive set forth in the NTIA Organization Act. For example, section 104 of the NTIA Organization Act provides that the Secretary of Commerce, in assigning frequencies for mobile radio services and other radio services ''shall promote efficient and cost-effective use of the spectrum to the maximum extent feasible.'' 47 U.S.C. 903(d)(1). Moreover, the NTIA Organization Act provides that any Federal Government station identified for reallocation shall ''to the maximum extent practicable * * * relocate its spectrum use to other frequencies that are reserved for Federal use or to consolidate its spectrum use with other Federal Government stations in a manner that maximizes the spectrum available for non-Federal use.'' Id. at section 923(h). There may also be other circumstances where no other frequency is available and a landline or other commercial service is a viable alternative available to the Federal entity that is required to relocate.

Availability of a Comparable Facility

15. The proposed rules do not require a Federal entity to relocate until a comparable facility is available to it for a reasonable time to make adjustments, determine compatibility, and ensure a seamless transition from an existing facility or frequency band(s) to the new or modified facility or frequency band(s). NTIA defines the term ''comparable facility'' to mean that the replacement facility restores the operational capabilities of the original facility to an equal or superior level. For example, in the 1710–1755 MHz band, the vast majority of Non-DoD Federal Government facilities are fixed point-to-point microwave networks, and may be replaced by fixed microwave facilities in other bands. On the other hand, DoD operates a number of systems, including highly mobile, non-communications systems. These military systems must operate within the limits of established doctrine.

16. NTIA will consider four basic factors to determine comparability of replacement communications facility, although there may be other factors to consider. These four basic factors are communications throughput, system reliability, operating costs, and operational capability. A replacement facility will be considered comparable if the new system's operational capability, communications throughput and reliability are equal to or greater than that of the system being replaced, taking into account the operating costs.

17. Communications throughput, for the purposes of this proceeding, means the amount of information transferred within the system for a given amount of time. For digital systems, communications throughput is measured in bits per second (bps), for analog systems the communications throughput is measured by the number of voice, video or data channels.

18. System reliability means the percentage of time information is accurately transferred within a system. The reliability of a system is a function of equipment failures (*e.g.*, transmitters, feed lines, antennas, receivers and battery back-up power) and the availability of the frequency channel given the propagation characteristics (*e.g.*, frequency, terrain, atmospheric condition, and noise) and equipment sensitivity. System reliability also includes the ability of a radio-communications station to perform a required function under stated conditions for a stated period of time. System reliability may involve three distinct concepts: Attaining a specified level of performance; the probability of achieving that level; and maintaining that level for a specified time. For digital systems this would be measured by the percent of time the bit error rate (BER) exceeds a desired value, and for analog transmissions this would be measured by the percentage of time that the receiver carrier-to-noise ratio exceeds the receiver threshold. It should be noted for many DoD systems, performance is defined by sophisticated system specifications as related to specific mission requirements. In measuring/assessing DoD systems, these specific system specifications must be used.

19. Operating costs are the costs to operate and maintain the Federal entity's replacement system. New licensees would compensate federal entities for any increased recurring costs associated with the replacement facilities (*e.g.*, additional rental payments and increased utility fees) for five years after relocation.

20. Operational capability is the measure of a system's ability to perform its validated functions within doctrinal requirements, including service, joint service, and allied interoperability requirements with related systems.

21. These four factors, however, may not be appropriate measures for all Federal Government stations required to relocate. For example, to measure comparability for radar systems it may be more accurate to compare the minimum required radar target cross section able to be detected at a given range with a specified probability of false alarm under mission-required conditions. Other measures of radar system comparability may include target resolution and the ability to meet performance specifications under adverse conditions such as weather and hostile jamming. Radar and other spectrum-dependent systems may require access to specific frequency bands to perform their missions in an

[20] See 47 U.S.C. 923(h).

[21] We note, however, that the statute provides reimbursement to Federal entities that relocate to ''another frequency or frequencies.'' 47 U.S.C. 923(g).

optimal manner. For example, long range surveillance functions relatively free of weather effects are optimized at low frequencies and weapon control at higher frequencies. The use of higher frequencies, however, may limit the useful range of some spectrum-dependent systems, such as radar or data links. Such limitations could affect mission performance.

22. NTIA seeks comments on this proposed definition and whether the factors described above are sufficient to determine comparability of facilities. If not, NTIA seeks comment on what other factors should be considered, and whether such factors should be tailored to specific Federal Government systems to be relocated.

Frequency Assignments Eligible for Reimbursement

23. The proposed rules outline the conditions, limitations and eligibility requirements for reimbursement of the costs associated with relocation as a result of reallocation.

24. *Equipment/system modification:* Sometimes radiocommunication systems in certain bands can be modified to tune outside of the reallocated band to the upper or lower portion of the incumbent band. Re-tuning is oftentimes less expensive to implement, assuming there is no congestion in the upper portion of the band as a result of the migration and assuming the transmitter-receiver frequency separation can be met. Re-tuning could save an agency a considerable amount of money because it does not require additional towers or stations, new feed lines or associated equipment. Thus, to the extent that a Federal entity that is required to relocate is able to modify its equipment, with the result that the retuned equipment provides operational capabilities comparable with its original system, NTIA proposes to limit reimbursement to the costs associated with re-tuning. We note, however, that modification/retuning may not be possible when taking into consideration the factor of ''operational comparability'' as noted above. We seek comment on this proposed limitation.

25. *Old Assignments versus new assignments:* NTIA identified the Federal bands for reallocation from the Federal Government to non-Government use in the February 1995 Spectrum Reallocation Final Report, as well as the February 1998 Spectrum Reallocation Report. On October 17, 1998, the President subsequently signed into law the National Defense Authorization Act for Fiscal Year 1999 that requires the private sector to reimburse Federal entities for the cost of relocation or modification of systems as a result of reallocation. Thus, for purposes of these proposed rules, we propose to characterize an old assignment to a Federal entity as one that was authorized before October 17, 1998, and a new assignment as one that was authorized after October 17, 1998. With respect to reimbursement under these rules, we propose that only old assignments within the affected bands (*i.e.,* 216–220 MHz, 143–1435 MHz, 1710–1755 MHz, 2385–2390 MHz) would be entitled to reimbursement. NTIA believes that the costs associated with any new assignment requested by Federal entities after the respective dates of reallocation reports in the affected bands should be borne by that Federal entity rather than a new commercial licensee to prevent unjust enrichment. We seek comment on this limitation.

26. *Exempted Federal power agencies:* Assignments made to Federal power agencies (FPAs) are statutorily exempt from the requirements to relocate under the reallocation reports.[22] Thus, the 1995 Spectrum Reallocation Final Report provides a list of frequency assignments in the 1710–1755 MHz band that support the FPAs and that are not required to relocate.[23] NTIA believes, however, that Section 923(g)(1)(A) of Title 47 of the U.S. Code can be read to permit an FPA to accept reimbursement for relocations undertaken on a voluntary basis. We seek comment on whether an FPA that wishes to relocate from a band of spectrum identified for reallocation can accept voluntary reimbursement from a commercial licensee. If so, should the parties be subject to these proposed rules or be left exclusively to voluntary negotiations?

27. *Other government stations:* Under the 1995 Spectrum Reallocation Final Report and the 1998 Spectrum Reallocation Report, NTIA also exempted other Federal Government assignments from the requirement to relocate from the bands identified for reallocation either indefinitely or for a longer terms of years.[24] We seek comment on whether these Federal entities can accept reimbursement for voluntarily relocating these stations to a commercial licensee, and if so, whether such negotiations should be subject to these proposed rules.

28. *Experimental Stations:* In general, the proposed rules do not permit reimbursement for relocated frequency assignments for experimental stations or experimental testing stations. An ''experimental station'' means a station utilizing radio waves in experiments with a view to the development of science or technique. An ''experimental testing station'' is used for the evaluation or testing of electronics, equipment or systems, including site selection and transmission path surveys. These stations are oftentimes temporary use stations and are operated on a non-interference basis. NTIA believes that most experimental stations not be entitled to reimbursement under the statute. Reimbursement, however, would still be required for frequency assignments to experimental stations for systems that are in the developmental stage that have been certified for spectrum support by NTIA for Stage 3 developmental testing.[25] Because systems at the Stage 3 are certified for testing of proposed operational hardware and potential equipment configurations, we believe that these systems are entitled to reimbursement. We seek comment on our treatment of experimental stations in the proposed rules.

Cost Sharing

29. NTIA proposes to adopt a cost-sharing plan where the potential requirement to reimburse a Federal entity for relocation costs could disproportionately fall upon one potential bidder or licensee or a small number of potential bidders or licensees. For example, there may be multiple bidders in a geographic area for small bandwidth that may result in division of a Federal entity's bandwidth. There is no mechanism in place to compensate the Federal entity for that portion of the spectrum that is not licensed or acquired by any particular auction winner. In these circumstances, one auction winner could be made to pay for the entire spectrum allocation held by the Federal entity, despite the

[22] See 47 U.S.C. § 923(c)(4)(C). The term Federal power agency refers to the Tennessee Valley Authority, the Bonneville Power Administration, the Western Area Power Administration, the Southwestern Power Administration, the Southeastern Power Administration, and the Alaska Power Administration.

[23] See Spectrum Reallocation Final Report, NTIA Special Publication 95–32, Appendix E, Tables 1and 2.

[24] See id. at Appendix E (Exempted Safety-of-Life Fixed Microwave Stations in the 1710–1755 MHz band); see also 1998 Spectrum Reallocation Report at 3–18 (Table 3–2), 3–38 (Table 3–4), 3–48 (Table 3–6), 4–1 (Table 4–1) (setting forth the sites exempt from relocation or with special relocation dates in the 216–220 MHz, 1432–1435 MHz, and 2385–2390 MHz bands).

[25] NTIA Manual of Regulations and Procedures for Federal Radio Frequency Management, Section 10.3.1 (September 1995). Stage 3 certification is required for testing proposed operational hardware and potential equipment configurations.

fact that only a portion of the bandwidth is needed. On the other hand, auction bidders that need only a portion of the bandwidth may perceive the cost of relocating a Federal entity too expensive in the absence of a cost-sharing plan, and thus may forgo providing a particular service to a geographic area.[26] To ensure that no private entity bears the full cost burden of relocating a government entity and to ensure that a geographic area is not denied service because the costs of reimbursement are disproportionate, we seek comment on whether a cost sharing plan, among auction winners, should be implemented. We also seek comment on what measures might reasonably be implemented to assure that the federal entity is guaranteed full payment from multiple licensees. We also seek comment on whether a band manager or some other entity that licensees may establish would be appropriate to serve as a clearinghouse to administer the cost-sharing plan. Although we contemplate developing a cost-sharing plan and criteria for identifying a clearinghouse for each auction, NTIA proposes to determine on a case-by-case basis whether a cost-sharing plan is needed for each auction. We seek comment on whether this case-by-case approach is appropriate.

30. If the proposed cost-sharing plan is adopted, NTIA proposes and seeks comment on whether it should be administered by an industry-supported organization or the government. NTIA does not propose at this time to designate any particular organization as the representative of the industry that will benefit from the auction of government spectrum, nor does NTIA propose any particular form that such an organization might take. NTIA seeks comment on the criteria it should use in designating a clearinghouse, and on whether it should be an existing organization or a new entity created for this purpose. NTIA also seeks comment on how the clearinghouse would be funded. If a clearinghouse is established receipts from expenses already incurred would be submitted to the clearinghouse for accounting purposes. We propose to sunset the cost-sharing plan to five years after any auction of a government spectrum subject to reimbursement rules. We believe that it is important to set a date certain on which any clearinghouse will be dissolved, and adopt a cost-sharing plan with the fewest possible variables so that it will be easy to administer.

31. We also seek comment on how a negotiation framework can best be established so as to minimize the personnel and other budgetary costs to the Government. For example, should NTIA establish a negotiation framework that will permit relocation of each Government system on a system-wide basis? Under such a framework, a Federal agency could request that all auction winners with frequency assignments that require that the agency relocate its system, participate in a single negotiation process so that a system-wide relocation solution can be achieved. Each Federal entity would provide a single point of contact for such consolidated negotiations. NTIA believes that such a negotiation mechanism could benefit both affected agencies and the private sector by streamlining administrative processes and reducing negotiating costs for both parties.

Sunset of Reimbursement Rights

32. The Defense Authorization Act of 1999 mandated reimbursement to Federal agencies and did not limit the time period for reimbursement. Thus, these proposed rules do not provide a sunset provision with respect to the reimbursement rights of Federal entities. We seek comments on our proposal not to include a sunset provision in these rules. Specifically, we seek comment on whether the statute precludes a sunset date.

Costs to Relocate

33. The proposed rules identify the marginal relocation and modification costs that are reimbursable. NTIA proposes to define ''marginal costs'' as the costs that will be incurred by a Federal entity to achieve comparable capability of systems relocated to a new frequency assignment or band or otherwise modified. Specifically, marginal costs would include all engineering, equipment, software, site acquisition and construction costs, as well as any legitimate and prudent transaction expenses, including outside consultants, and reasonable additional costs incurred by the Federal entity that are attributable to relocation, including increased recurring costs associated with the replacement facilities. Marginal costs would include costs related to the need to achieve comparable capability when replacing, modifying or reissuing equipment in order to relocate when the systems that must be procured or developed have increased functionality due to technological growth, but would not include costs related to optional increased functionality that is independent of the need to achieve comparable capability. To the extent that a Federal entity needs to accelerate the introduction of systems and equipment to allow for relocation earlier than the Federal entity had planned, replacement costs of the accelerated systems and equipment shall be included in marginal costs. Marginal costs would also include the costs of any modification or replacement of equipment, software, facilities, operating manuals, training costs, or regulations that are attributable to relocation. Marginal costs would not include costs related to routine upgrades and operating costs and lifecycle replacements that would have occurred prior to the date of the required relocation. The costs identified as reimbursable in these proposed rules conform to those identified by Congress in 47 U.S.C. § 923(g)(1)(A) and 923 (g)(2)(A). We seek comment on this definition of marginal costs.

34. Consistent with the statute, the proposed rules would require reimbursement payments to be made in advance of relocation. The proposed rules would also require the successful bidder to guarantee to pay all marginal costs as a precondition of NTIA's withdrawal of the relevant Federal license. The proposed rules also would permit payments to be made in cash or in kind, as agreed to by the affected Federal entity. The proposed rules further require that cash payments be made in the account of the Federal entity in the Treasury of the United States, or in a separate account as authorized by law.

Notification of Marginal Costs

35. Under 47 U.S.C. 923(g)(1)(A), NTIA must provide information to the FCC so that the FCC can advise potential bidders of the marginal costs of relocation or modification. This statute also requires Federal entities that propose to relocate to notify NTIA of the marginal costs anticipated to be associated with such relocation or with modifications necessary to accommodate a prospective licensee. NTIA's proposed rules thus require Federal entities that propose to relocate, modify or retune systems to provide such marginal cost information to NTIA at least 240 days prior to an FCC

[26] There also may be circumstances where the national nature of federal systems is such that the requirement to reimburse a federal entity for relocation costs may disproportionately fall on a small number of successful bidders. Thus, a particular licensee's geographic area may cover a critical element of a much larger national system, such as a system where a small number of satellite uplink transmitter terminals, each located at a specific site, communicates to many satellites. In other situations, there are highly mobile systems (e.g., airborne telemetry or data link systems) that are not related to any specific geographic area.

auction.[27] In turn, NTIA intends to provide this information to the FCC at least 180 days prior to such auction so that the FCC will have a sufficient amount of time to notify potential bidders.[28]

Negotiation and Mediation

36. Under the proposed rules, within 30 days after the license is granted, the auction winner would be required to contact the Federal entity that is required to relocate. Under the proposed rules, receipt of the notification by the Federal entity would trigger a 135-day negotiation and/or third-party mediation period between the Federal entity and the auction winner. During the mandatory negotiation period, parties are encouraged to resolve any differences with respect to relocation or modification costs or any other related issues. If, at the end of the 135-day period, the parties have not reached an agreement with respect to relocation, under the proposed rules, the parties may agree, by mutual consent, to extend the mandatory negotiation period. We believe that this mandatory negotiation period affords the parties an opportunity to freely, and without constraints, negotiate the terms relative to relocation. To the extent that the 135-day period is insufficient, we believe that the extension of time provision gives the party additional time that may be necessary to come to an agreement. This provision would also allow the parties to take advantage of a neutral third party to help facilitate the negotiation process without rendering a decision. We solicit comments on the proposed rule to require mandatory party-to-party negotiations and/or third-party mediation.

37. Under the proposed rules, the parties would be required to negotiate relocation or modification costs in good faith during the mandatory negotiation period. Good faith requires each party to provide information to the other that is reasonably necessary to facilitate the relocation process. Good faith means that (1) neither party may refuse to negotiate; and (2) each party must behave in a manner necessary to facilitate negotiation in a timely manner. We seek comments on these good faith obligations.

Non-Binding Arbitration

38. If the parties have not reached agreement and do not agree to extend the negotiation/mediation period, or if a previously extended negotiation/mediation period expires, the proposed rules would require the parties to enter into non-binding arbitration. The parties would have to agree on the arbitrator, and to prevent bias, the arbitrator would not be the same person as the mediator if mediation has been used by the parties and failed. Each party would pay its own costs for arbitration and share equally the cost of the arbitrator. The arbitrator's non-binding decision may be requested by NTIA as part of the record in a petition for relocation, as described below. The recommended decision may be a factor, among others, in NTIA's determination on a petition for relocation. We seek comments on the proposed requirement that parties enter into non-binding arbitration. We also seek comments on any alternative proposal for the resolution of disputes between the parties.

Petition for Relocation

39. Under 47 U.S.C. 923(g)(2), an auction winner seeking to relocate a Federal Government station must submit a petition for relocation to NTIA. Under the proposed rules, NTIA requires that a copy of the petition also be simultaneously provided to the FCC.[29] Moreover, under the proposed rule, NTIA's determination on the petition would be set forth in writing within six months after the petition has been filed and be provided to the auction winner and the Federal entity. The statute requires NTIA to limit or terminate the Federal entity's license within six months after receiving the petition if the following requirements are met:

(A) the person seeking relocation of the Federal Government station has guaranteed to pay all relocation or modification costs incurred by the Federal entity, including all engineering, equipment, site acquisition and construction, and regulatory fee costs;

(B) all activities necessary for implementing the relocation or modification have been completed, including construction of replacement facilities (if necessary and appropriate) and identifying and obtaining new frequencies for use by the relocated Federal Government station;

(C) any necessary replacement facilities, equipment modifications, or other changes have been implemented and tested to ensure that the Federal Government station is able to accomplish its purposes; and

(D) NTIA has determined that the proposed use of the spectrum frequency band to which the Federal entity will relocate is consistent with:

(i) Obligations undertaken by the United States in international agreements and United States national security and public safety interests; and

(ii) The technical characteristics of the band and other uses of the band.

If NTIA does not act within 6 months after the Petition for Relocation is filed, the Petition is deemed denied. NTIA's determination, or failure to act on a Petition within 6 months, would be final and conclusive upon the parties.

40. The proposed rules would permit an auction winner to file a petition for relocation anytime after an agreement has been reached on marginal costs. The proposed rules also permit an auction winner to file a petition for relocation if the parties fail to reach agreement and non-binding arbitration has occurred. In that case, the auction winner may file a petition for relocation with NTIA after a decision has been rendered by the arbitrator. Any recommended decision by the arbitrator may be requested by NTIA as part of the record in a petition for relocation determination. The recommended decision may be a factor, among others, in the NTIA determination on the petition for relocation. In making its determination, NTIA will consult with the affected Federal entity and, as appropriate, may also consult with the Office of Management and Budget and other executive branch agencies. We seek comment on these proposed rules as they relate to the Petition for Relocation.

41. In certain circumstances, it may be beneficial for the Federal entity to seek voluntary withdrawal of an assignment after the parties reach an agreement through negotiation, mediation, or non-binding arbitration. NTIA anticipates the vast majority of relocations to occur under agreements reached between the parties, thus permitting voluntary withdrawals of assignments would greatly streamline the administrative process of making the spectrum available to auction winners. NTIA

[27] The marginal costs submitted on behalf of the Federal agencies as part of the notification process may be subject to review and approval by the Office of Management and Budget (OMB). OMB's review would assure the accuracy of the costs. See also Section 1064(d) of the Strom Thurmond National Defense Authorization Act for Fiscal Year 1999, Pub. L. No. 105–261, 112 Stat. 1920 (1998).

[28] For example, we anticipate that the first FCC auction for spectrum frequency subject to these rules will occur in December 2001. In that case, NTIA would provide cost information to the FCC no later than June 1, 2001. Therefore, the Federal entities would have to provide estimated cost information to NTIA by April 1, 2001.

[29] We note that the statute permits the Federal entity to reclaim its facilities if it demonstrates to the FCC that the new facilities are not comparable. See 47 U.S.C. 923(g)(3). Rules regarding the Federal entity's right to reclaim will be promulgated by the FCC. See also Reallocation of the 216–220 MHz, 1390–1395 MHz, 1427–1429 MHz, 1429–1432 MHz, 1432–1435 MHz, 1670–1675 MHz, and 2385–2390 MHz Government Transfer Bands, ET Docket No. 00–221, Notice of Proposed Rule Making, FCC 00–395, at ¶ 64 (November 20, 2000).

seeks comment on permitting such voluntary requests for assignment withdrawal as an alternative to the petition for relocation in cases in which the parties have reached agreement.

Unclassified, Classified and Sensitive Assignments

42. *Unclassified government facilities.* With respect to unclassified government facilities, we propose to provide the following information to the FCC prior to an auction of the affected bands:

(1) List of Government facilities.

(2) Government agency operating each facility.

(3) Location of each facility.

(4) General type of operation and equipment (*e.g.,* fixed microwave, tactical mobile radio, etc.).

(5) Whether the facility can be retuned, modified, or must be relocated.

(6) Estimated marginal cost of retuning, modification, or relocation.

(7) Whether the facility overlaps to one or more license areas or spectrum blocks.

(8) Total estimated costs of relocation for all assignments.

43. *Classified government facilities.* These proposed rules would permit reimbursement to the Federal entity, even if an assignment is classified. As defined in the proposed rule and consistent with Executive Order 12958,[30] a ''classified assignment'' would be a frequency assignment and information related to a frequency assignment that has been determined pursuant to Executive Order 12958 or any predecessor order to require protection against unauthorized disclosure and that is marked as ''confidential,'' ''secret,'' or ''top secret'' to indicate its classified status when in documentary form. As directed by Executive Order 12958, Executive Order 12968 [31] and related national security regulations, classified assignment can only be made available to individuals with the appropriate clearances and with a ''need to know'' (need for access) in order to perform or assist in performing a lawful and authorized government function.

44. Prior to an auction, Federal entities will provide a single, consolidated and unclassified figure to NTIA for the cost of relocating, retuning, or modifying all such classified systems. NTIA will provide this information to the FCC which in turn will provide the figure to bidders with the following conditions: To the extent it is consistent with national security considerations, the figure may be broken down by license service area and spectrum block to give those bidding on a geographic basis the best indication possible of the cost they may have to pay to relocate, retune or modify the systems at issue. Following the auction, the winner may apply for a facility clearance pursuant to the National Industrial Security Program Operating Manual and related individual security clearances. If those clearances and accesses are granted, classified information may be made available with regard to certain Government systems in accordance with the terms and conditions prescribed in the clearances and accesses provided, and subject to the overall rules and authorities found in Executive Order 12958, Executive Order 12968, and related federal laws, rules and regulations.

45. *Sensitive assignments.* As defined in the proposed rule, a ''sensitive assignment'' would be a frequency assignment and information related to a frequency assignment (e.g. operations or technical parameters) that are not releasable to the public under the Freedom of Information Act or relevant laws or regulations.[32] Prior to an auction, Federal entities will provide a single, consolidated and unclassified figure to NTIA for the cost of relocating, retuning, or modifying all such sensitive systems. NTIA will provide this information to the FCC which in turn will provide the figure to bidders with the following conditions: To the extent it is consistent with the sensitive nature of the assignment, the figure may be broken down by license service area and spectrum block to give those bidding on a geographic basis the best indication possible of the cost they may have to pay to relocate, retune or modify the systems at issue. Following the auction, we propose that the government agency release the sensitive information to the winning licensee pursuant to a non-disclosure agreement.

46. We seek comment on our proposed treatment of these assignments.

Other Information

Executive Order 12866

47. This proposed rule has been determined to be significant under section 3(f) of Executive Order 12866.

Executive Order 13312

48. This rule does not contain policies with Federalism implications sufficient to warrant preparation of a Federalism assessment under Executive Order 12612.

Regulatory Flexibility Act

49. As required by the Regulatory Flexibility Act (RFA) [33] NTIA has prepared an Initial Regulatory Flexibility Analysis (IRFA) of the possible impact that this proposed rule, if adopted, would have on small entities. Written public comments are requested on the IRFA. Comment must be identified as responses to the IRFA and must be filed by the deadlines for comments on the NPRM.

Initial Regulatory Flexibility Analysis

50. As required by the Regulatory Flexibility Act (RFA), NTIA has prepared this present Initial Regulatory Flexibility Analysis (IRFA) of the possible significant economic impact on small entities by the policies and rules proposed in this NPRM. Written public comments are requested on this IRFA. Comments must be identified as responses to the IRFA and must be filed by the deadlines for comments on this NPRM.

A. Need for, and Objectives of, the Proposed Rules

51. The Strom Thurmond National Defense Authorization Act for Fiscal Year 1999 authorized Federal entities to accept compensation payments when they relocate or modify their frequency use to accommodate non-Federal users of the spectrum.[34] In essence, the Act requires the private sector to reimburse Federal entities for the costs that are incurred as a result of the reallocation of radio spectrum mandated by Title VI of the Omnibus Budget Reconciliation Act of 1993 (OBRA 93),[35] the Balanced Budget Act of 1997 (BBA 97) and future reallocations. The Act also directs NTIA and the Federal Communications Commission (FCC) to ''develop procedures for the implementation of [relocation] which * * * shall include a process for resolving any differences that arise between the Federal Government and commercial licensees regarding estimates of relocation and modification costs.'' [36]

52. This initial regulatory flexibility analysis provides, to the extent possible, relevant information regarding reimbursement such as the Federal frequency assignments for reallocation and the estimated relocation costs that will ultimately be borne by the private sector. As stated above Congress directed NTIA and the FCC to develop procedures for the implementation of the reimbursement process. Pursuant to

[30] Exec. Order No. 12958, 3 CFR 333 (1995).

[31] Exec. Order No. 12968, 3 C.F.R. 391 (1995).

[32] Many of these assignments involve federal public safety and law enforcement activities.

[33] *See* 5 U.S.C. 603.

[34] 47 U.S.C. 923(g)(1).

[35] Pub. L. 103–66, 107 Stat. 31 (1993).

[36] *See* 47 U.S.C. 923(g)(1)(E).

this direction from Congress, NTIA prepared this NPRM. NTIA is not able to determine the type of entities that will be potential bidders for the particular spectrum frequencies at issue here, thus NTIA is unable to fully describe the effect that the proposed rules will have on small entities. However, significant economic impacts are unlikely because it is expected that bidders in an auction for the eligible spectrum, including small entities, will factor in the estimated relocation costs and adjust their bids accordingly.

B. Federal Frequency Assignments Subject to Reallocation

53. On August 10, 1993 OBRA 93 was signed into law. OBRA 93 authorized the FCC to use competitive bidding (auctions) for the reassignment and licensing of spectrum frequencies for certain commercial services. OBRA 93 also directed the Secretary of Commerce to transfer at least 200 megahertz (MHz) of spectrum below 5 gigahertz (GHz) from Federal agencies to the FCC for licensing to the private sector. Pursuant to OBRA 93, NTIA identified Federal bands for reallocation totaling 235 MHz from the Federal Government to non-Government use in its February 1995 Spectrum Reallocation Final Report.[37] Subsequently, BBA–97 required the Secretary of Commerce to identify an additional 20 MHz below 3 Ghz for reallocation to non-Federal users.[38] In response to this directive, NTIA issued a Spectrum Reallocation Report in February 1998 which identified the additional bands for reallocation.[39] The specific frequency bands that currently qualify for reimbursement pursuant to the proposed rules are: 216–220 MHz; 1432–1435 MHz; 1710–1755 MHz; and 2385–2390 MHz.

C. Estimated Relocation Costs

54. At this point, NTIA does not have the final estimated costs of relocation for all of the bands identified in the NPRM. In fact, the NPRM proposes dates for the Federal entities to provide that information to NTIA. The final spectrum reallocation reports prepared by NTIA in response to OBRA 93 and BBA 97 identified estimates of implementation costs to Federal agencies of approximately $1.5 billion based on data provided by major Federal agencies. Subsequent modifications to these estimates have been made based on a report to Congress from the Department of Defense (DoD), and changes to the reallocation plan as directed by the National Defense Authorization Act for FY 2000. Taking these factors into account, the current reimbursable long-term cost estimates to the Federal agencies of implementing the spectrum reallocations under OBRA 93 and BBA 97 is between $460–$810 million.

Although NTIA identifies spectrum to reallocate from the Federal government to the private sector, NTIA does not determine how the spectrum will be used by the private sector. The Federal Communications Commission, through its regulations identifies options for making use of bands transferred from Government to non-Government use pursuant to OBRA 93 and BBA 97. In fact, the FCC recently issued an NPRM on the allocation of 27 megahertz of spectrum from the 216–220 MHz, 1390–135 MHz, 1427–1429 MHz, 1429–1432 MHz, 1432–1435 MHz, 1670–1675 MHz, and 2385–2390 MHz bands.[40] In that NPRM, the FCC proposes general Fixed Service and Mobile Service allocation for these bands, and solicits comments on other possible allocations and potential service rules for the services to which the bands may be allocated. The FCC also solicits comments on its Initial Regulatory Flexibility Analysis of the NPRM which describes the number of small entities to which its proposed rules would apply.

In accordance with 5 U.S.C. 603, the following information is provided to conduct the necessary initial regulatory flexibility analysis:

D. Legal Basis

55. The objective of the proposed rule is to establish procedures to compensate the Federal Government for expenses it incurs in relocating to a new frequency as a result of a reallocation of spectrum. Congress determined that the Federal Government should be reimbursed by commercial licensees that are awarded spectrum previously held by the Federal Government. The legal basis for the proposed rule is the Defense Authorization Act for Fiscal Year 1999 which directs NTIA and the FCC to develop procedures to implement reimbursement, including a process for resolving differences that arise between the parties regarding estimates of relocation or modification costs.

E. Description and Estimate of the Number of Small Entities to Which the Proposed Rules Will Apply

56. It is difficult, if not impossible, to estimate the number of small entities, if any, to which the proposed rule would apply. The rule applies to winners of a competitive bidding (auction) that the FCC will hold at an undetermined date after January 2001. There is no way to predict, at this point in time, the type of entities that will be potential bidders for the spectrum that the FCC makes available. In fact, entities that are not even in existence at this time may be participating in a future auction for the particular spectrum frequency at issue. The FCC may impose eligibility requirements, however the auctions are usually open to any type of entity. Any estimate of the number of small entities to which this proposed rule will apply should be made after the FCC makes a determination of the type of service that the FCC allocates for these bands of spectrum. The proposed rules, however, require the FCC to provide the estimated cost of reimbursement to potential bidders. Thus, to the extent that a small entity is a potential bidder, it will be able to calculate its costs to bid on the particular spectrum frequency, taking into account the estimated cost to reimburse the Federal Government. As stated above the estimated costs of relocation at this time is between $460–$810 million. Because these costs are only estimates and bids may be adjusted to reflect these costs, it is difficult at this time to determine the impact that these costs will have on small entities. We solicit public comment on this IRFA as to the impact that the proposed rule will have on small entities as well as any alternative ways to alleviate such an impact.

F. Description of Projected Reporting, Recordkeeping and Other Compliance Requirements

57. The proposed rules do not impose reporting, record keeping or other compliance requirements on the private sector, small entities or otherwise.

G. Federal Rules That May Duplicate, Overlap, or Conflict With the Proposed Rules

58. It does not appear that any other Federal rule duplicates, overlaps or conflicts with the proposed rule. The proposed rules are focused on reimbursement to Federal entities for relocation costs from specific spectrum frequencies. No other Federal rule requires the private sector to reimburse

[37] *See* National Telecommunications and Information Administration, U.S. Department of Commerce, NTIA Special Publication 94–27, *Spectrum Reallocation Final Report* (Feb. 1995).

[38] Pub. L. 105–33, 111 Stat. 251 (1997).

[39] Of the 20 MHz of spectrum, eight (8) MHz were subsequently reclaimed by the Federal Government in accordance with the National Defense Authorization Act for Fiscal Year 2000. *See* Pub. L. 106–65, 113 Stat. 512 (1999).

[40] Reallocation of the 216–220 MHz, 1390–1395 MHz, 1427–1429 MHz, 1429–1432 MHz, 1432–1435 MHz, 1670–1675 MHz, and 2385–2390 MHz Government Transfer Bands, ET Docket No. 00–221, Notice of Proposed Rule Making, FCC 00–395, at ¶ 64 (November 20, 2000).

Federal entities for relocation costs of the specific radio spectrum frequencies identified in the proposed rules. The FCC, however, will promulgate service rules regarding these spectrum frequencies, however, we do not anticipate that the FCC's rules will duplicate, overlap or conflict with this proposed rule.

H. Steps Taken To Minimize Significant Economic Impact on Small Entities, and Significant Alternatives Considered

59. As stated above, the applicable statute requires NTIA to develop rules to implement the reimbursement process.[41] The NPRM, proposes and solicits comment on a number of alternatives which would minimize economic impact on small entities. For example, the proposed rules solicit comments on whether a Federal entity could retune or modify its equipment outside of the reallocated band to the upper or lower portion of the incumbent band. Re-tuning is usually less expensive to implement and can save an agency a considerable amount of money thus lessening the reimbursement obligation of the private sector. Another alternative in the proposed rule which could minimize the economic impact on small entities is the proposal to permit Federal entities to relocate to a landline communications system or a commercial radio service. Such an option may be a cost-effective alternative to the Federal entity relocating to another frequency. Again, this alternative may reduce reimbursement expenses that would be borne by the private sector and, perhaps, small entities. To the extent that there are other ways to accomplish the stated objectives of Congress, the proposed rule states that ''[t]hese proposed rules have been developed to ensure that the Federal Government is fully reimbursed for the expenses it incurs in retuning, modifying or relocating a system as a result of reallocation. To the extent that there are other ways to accomplish this goal, NTIA will entertain comments from interested parties. Comments received addressing alternatives to the proposed rules will be discussed in a more thorough analysis in the Final Rule.

List of Subjects in 40 CFR Part 301

Administrative practice and procedure, Classified information, Communications, Communications equipment, Government procurement, Government property, Radio, Satellites, Telecommunications, Telephone.

[41] See 47 U.S.C. 923(g)(1)(E).

Proposed Rules

Accordingly, NTIA amends 47 CFR chapter III by adding part 301 to read as follows:

PART 301—-MANDATORY REIMBURSEMENT FOR FREQUENCY BAND OR GEOGRAPHIC RELOCATION OF SPECTRUM-DEPENDENT SYSTEMS

Subpart A—General Information

Sec.
301.1 Purpose.
301.10 Applicability.
301.20 Definitions.

Subpart B—Procedure for Reimbursement for Relocations and Dispute Resolution.

301.100 Costs to relocate.
301.110 Notification of marginal costs.
301.120 Negotiations and mediation.
301.130 Nonbinding arbitration.
301.140 Petition for relocation.
301.150 Request for withdrawal.

Authority: 47 U.S.C. 921 *et seq.*; Pub. L. 105–261, 112 Stat. 1920.

Subpart A—General Information

§ 301.1 Purpose.

Pursuant to Public Law 105–261 (112 Stat. 1920), private sector entities are required to reimburse Federal users for relocation of Federal Government stations from one or more frequencies due to reallocation. Reimbursement costs are in addition to any costs paid by the successful bidder for the frequency spectrum at the FCC auction.

301.10 Applicability.

(a) *Affected bands.*

(1) These provisions apply to the following bands of frequencies located below 3 gigahertz:

(i) 216 to 220 MHz

(ii) 1432 to 1435 MHz

(iii) 1710 to 1755 MHz

(iv) 2385 to 2390 MHz

(2) NTIA may periodically identify additional bands that are subject to this part in a notice published in the **Federal Register**.

(b) *Availability of comparable facility.* The Federal entity will not relocate until a comparable facility, or modification to an existing facility, is available for enough time to determine comparability, make adjustments, and ensure a seamless handoff. The factors to be considered in determining comparability are communications throughput, system reliability, operating costs, and operational capability as defined in this part.

(c) *Frequency Assignments Eligible for Reimbursement.*

(1) *Equipment modification/retuning.* To the extent that a Federal entity that is required to relocate is able to modify/re-tune its equipment with the result that the modified equipment provides operational capabilities comparable with the original system, reimbursement will be limited to the marginal costs associated with modification/retuning.

(2) *Old assignments/new assignments.* Old assignments are those that were authorized prior to October 17, 1998 (i.e., 216–220 MHz, 143–1435 MHz, 1710–1755 MHz, 2385–2390 MHz). New assignments are those assignments in the affected bands that were authorized after October 17, 1998. New assignments in the affected bands are not eligible for reimbursement under these rules.

(3) *Exempted Federal power agencies.* Frequency assignments in the 1710—1755 MHz band that support the Federal power agencies that are exempt from reallocation requirements are not entitled to reimbursement under these rules.

(4) *Experimental stations.* Frequency assignments for experimental stations or experimental testing stations are not entitled to reimbursement under this part. Reimbursement shall apply to experimental stations that have been certified for spectrum support by NTIA for stage 3 developmental tests under section 10.3.1. of the *NTIA Manual of Federal Regulations and Procedures for Federal Radio Frequency Management.* This manual is available on NTIA's website at *http://www.ntia.doc.gov/osmhome/redbook/redbook.html.* The manual is also available from the U.S. Government Printing Office (S/N: 903–008–0025–3).

(5) *Certain other government stations.* Other exempted stations identified under the *1995 Spectrum Reallocation Final Report* and the *1998 Spectrum Reallocation Report* are not entitled to reimbursement under these rules. These reports are available at http://www.ntia.doc.gov.

(d) *Sunset of reimbursement rights.* There is no sunset of reimbursement rights for affected agencies.

§ 301.20 Definitions.

As used in this part:

(a) The term *allocation* means an entry in the national table of frequency allocations (47 CFR 2.105) of a given frequency band for the purpose of its use by one or more radiocommunication services, or the radio astronomy service under specified conditions.

(b) The term *assignment* means authorization given for a radio station to use a radio frequency or radio frequency channel under specified conditions.

(c) The term *auction* means the competitive bidding process that Congress authorized the Federal

Communication Commission to use in title VI of the Omnibus Budget Reconciliation Act of 1993 and the Balanced Budget Act of 1997 for the reassignment and licensing of spectrum identified in § 301.10(a) of this subpart for certain commercial radio-based services.

(d) The term *classified assignment* means a frequency assignment and information related to a frequency assignment that has been determined pursuant to Executive Order 12958 or any predecessor order to require protection against unauthorized disclosure and that is marked as ''confidential,'' ''secret,'' or ''top secret'' to indicate its classified status when in documentary form.

(e) The term *Commission* or *FCC* means the Federal Communications Commission.

(f) The term *communications throughput* means the amount of information transferred within the system for a given amount of time. For digital systems, the communications throughput is measured in bits per second (bps) and for analog systems the communications throughput is measured by the number of voice, video or data channels.

(g) The term *comparable facility* means that the replacement facility restores the operational capabilities of the original facility to an equal or superior level taking into account at least four factors: communications throughput, system reliability, operating costs, and operational capability.

(h) The term *experimental station* means a station utilizing radio waves in experiments with a view to the development of science or technique.

(i) The term *experimental testing station* refers to an experimental station used for the evaluating or testing of electronics equipment or systems, including site selection and transmission path surveys, which have been developed for operational use.

(j) The term *Federal entity* means any department, agency or other instrumentality of the Federal Government that utilizes a Government station license obtained under section 305 of the Communications Act of 1934 (47 U.S.C. 305).

(k) The term *in-kind* means the value of non-cash contributions provided by non-Federal private parties. In-kind contributions may be in the form of real property, equipment, supplies and other expendable property, and the value of goods and services directly benefitting and specifically identifiable to the project or program.

(l) The term *marginal costs* means the costs that will be incurred by a Federal entity to achieve comparable capability of systems relocated to a new frequency assignment or band or otherwise modified.

(m) The term *mediation* means a flexible and voluntary dispute resolution procedure in which a specially trained mediator facilitates negotiations to reach a mutually agreeable resolution. The mediator may not dictate a settlement. The mediation process involves one or more sessions in which counsel, parties and the mediator participates, and may continue over the period of time specified in this part. The mediator can help the parties improve communication, clarify interests, and probe the strengths and weaknesses of positions. The mediator can also identify areas of agreement and help generate options that lead to a settlement.

(n) The term *NTIA* means the National Telecommunications and Information Administration.

(o) The term *operational costs* means the cost to operate and maintain the federal entity's replacement facility. New licensees would compensate federal entities for any increased recurring costs associated with the replacement facilities for five years after relocation. Such costs shall include, but not be limited to additional rental payments and increased utility fees.

(p) The term *operational capability* means the measure of a system's ability to perform its validated functions within doctrinal requirements, including service, joint service, and allied interoperability requirements with related systems.

(q) The term *relocation* refers to the process of moving a system that is displaced as a result of reallocation.

(r) The term *sensitive assignments* refer those assignments whose operations or technical parameters are not releasable to the public under the Freedom of Information Act.

(s) The term *system reliability* means the percentage of time information is accurately transmitted within a system. The reliability of a system is a function of equipment failures (e.g., transmitters, feed lines, antennas, receivers and battery back-up power), the availability of the frequency channel given the propagation characteristics (e.g., frequency, terrain, atmospheric condition and noise), and equipment sensitivity. System reliability also includes the ability of a radio-communications station to perform a required function under stated conditions for a stated period of time. System reliability may involve three concepts: attaining a specified level of performance; the probability of achieving that level; and maintaining that level for a specified time. For digital systems, system reliability shall be measured by the percentage of time the bit error rate (BER) exceeds a desired value, and for analog transmissions, this would be measured by the percentage of time that the received carrier-to-noise ratio exceeds the receiver threshold.

Subpart B—Procedure for Reimbursement for Relocations and Dispute Resolution

§ 301.100 Costs to relocate.

(a) *Relocation costs.* The auction winner is required to reimburse the Federal entity for all costs incurred as a result of modification, retuning and/or relocation.

(b) *Method of reimbursement.* Reimbursement payments shall be made in advance of relocation and may be in cash or in kind as agreed to by the affected Federal entity. Any such payment in cash shall be deposited in the account of such Federal entity in the Treasury of the United States or in a separate account as authorized by law. If actual costs are less than the payments made, the Federal entity shall refund the difference.

§ 301.110 Notification of marginal costs.

(a) NTIA shall provide the Federal entity's estimated marginal cost information to the FCC at least 180 days before to an auction. Marginal costs are the costs that will be incurred by a Federal entity to achieve comparable capability of systems relocated to a new frequency assignment or band or otherwise modified. Specifically, marginal costs would include all engineering, equipment, software, site acquisition and construction costs, as well as any legitimate and prudent transaction expenses, including outside consultants, and reasonable additional costs incurred by the Federal entity that are attributable to relocation, including increased recurring costs associated with the replacement facilities. Marginal costs would include costs related to the need to achieve comparable capability when replacing, modifying or reissuing equipment in order to relocate when the systems that must be procured or developed have increased functionality due to technological growth, but would not include costs related to optional increased functionality that is independent of the need to achieve comparable capability. To the extent that a Federal entity needs to accelerate the introduction of systems and equipment to allow for relocation earlier than the Federal entity had planned, replacement costs of the accelerated systems and equipment shall be included in marginal costs. Marginal

costs would also include the costs of any modification or replacement of equipment, software, facilities, operating manuals, training costs, or regulations that are attributable to relocation. Marginal costs would not include costs related to routine upgrades and operating costs and lifecycle replacements that would have occurred prior to the date of the required relocation. Any Federal entity that proposes to relocate shall notify NTIA at least 240 days before the auction of the marginal costs anticipated to be associated with relocation or with modifications necessary to accommodate prospective licensees. The information provided to NTIA must also include the name and telephone number of a person within the Federal entity that can be contacted by the auction winner.

(b) Unclassified assignments. NTIA will provide the following information to the FCC prior to the auction with repect to unclassified government facilities:

(1) List of Government facilities.

(2) Government agency operating each facility.

(3) Location of each facility.

(4) General type of operation and equipment.

(5) Whether the facility can be retuned, modified, or must be relocated.

(6) Estimated marginal cost of retuning, modification, or relocation.

(7) Whether the facility overlaps to one or more license areas or spectrum blocks.

(8) Total estimated costs of relocation for all assignments.

(c) Classified assignments. Prior to an auction, Federal entities will provide a single, consolidated and unclassified figure to NTIA for the cost of relocating, retuning, or modifying all such classified systems. NTIA will provide this information to the FCC which in turn will provide the figure to bidders with the following conditions: To the extent it is consistent with national security considerations, the figure may be broken down by license service area and spectrum block to give those bidding on a geographic basis the best indication possible of the cost they may have to pay to relocate, retune or modify the systems at issue. Following the auction, the winner may apply for a facility clearance pursuant to the *National Industrial Security Program Operating Manual* and related individual security clearances. The manual is available throught the Defense Security Service at http://www.dss.mil/isec/nistom.htm or the Government Printing Office (ISBN 0-16–045560–X). If those clearances and accesses are granted, classified information may be made available with regard to certain Government systems in accordance with the terms and conditions prescribed in the clearances and accesses provided, and subject to the overall rules and authorities found in Executive Order 12958, Executive Order 12968, and related Federal laws, rules, and regulations.

(d) Sensitive assignments. Prior to an auction, Federal entities will provide a single, consolidated, and unclassified figure to NTIA for the cost of relocating, retuning, or modifying all such sensitive systems. NTIA will provide this information to the FCC which in turn will provide the figure to bidders with the following conditions: To the extent it is consistent with the sensitive nature of the assignment, the figure may be broken down by license service area and spectrum block to give those bidding on a geographic basis the best indication possible of the cost they may have to pay to relocate, retune, or modify the systems at issue. Following the auction, the government agency shall release the sensitive information to the winning licensee pursuant to a non-disclosure agreement.

§ 301.120 Negotiations and mediation.

(a) Within 30 days after the license is granted, the auction winner is required to contact the Federal entity that occupies the band that the FCC has awarded to the auction winner. Receipt of this notification by the Federal entity triggers the 135-day period for negotiation or mediation between the Federal entity and the auction winner. During this period, parties are encouraged to resolve any differences with respect to relocation or modification costs or any other related issues, either through party-to-party negotiations and/or a third party mediator. If, at the end of the 135-day period, the parties have not reached an agreement with respect to relocation, the parties may agree to extend the negotiation period.

(b) Good faith obligation. The parties are required to negotiate in good faith. Good faith means that:

(1) Neither party may refuse to negotiate; and

(2) Each party must behave in a manner necessary to facilitate the relocation process in a timely manner. Classified or sensitive information will be treated in accordance with § 301.110 of this subpart.

§ 301.130 Nonbinding arbitration.

If the parties have not reached agreement to extend the negotiation/mediation period, or if a previously extended negotiation/mediation period expires, the parties shall enter into nonbinding arbitration. The parties shall agree on an arbitrator, and the arbitrator may not be the same person as the mediator if mediation has been used by the parties and failed. The parties may design such rules for arbitration as deemed appropriate. The arbitrator's nonbinding decision may be requested by NTIA as part of the record in its determination on a petition for relocation under § 301.140. The decision may be a factor, among other things, in the NTIA determination on a petition for relocation.

301.140 Petition for relocation.

(a) In general. An auction winner seeking to relocate a Federal Government station must submit a petition for relocation to NTIA. A copy of the petition must also be simultaneously provided to the FCC. NTIA's determination shall be set forth in writing within 6 months after the petition for relocation has been filed, and be provided to the auction winner and the Federal entity. NTIA shall limit or terminate the Federal entity's operating license within 6 months after receiving the petition if the following requirements are met:

(1) The person seeking relocation of the Federal Government station has guaranteed to pay all modification and relocation costs incurred by the Federal entity, including all engineering, equipment, site acquisition and construction, and regulatory fees;

(2) All activities necessary for implementing the relocation or modification have been completed, including construction of replacement facilities (if necessary and appropriate) and identifying and obtaining new frequencies for use by the relocated Federal Government station (where such station is not relocating to spectrum reserved exclusively for Federal use);

(3) Any necessary replacement facilities, equipment modifications, or other changes have been implemented and tested to ensure that the Federal Government station is able to accomplish its purposes; and

(4)(i)NTIA has determined that the proposed use of the spectrum frequency band to which the Federal entity will relocate its operations is

(A) Consistent with obligations undertaken by the United States in international agreements and with United States national security and public safety interests; and

(B) Suitable for the technical characteristics of the band and consistent with other uses of the band.

(ii) In exercising its authority, NTIA shall consult with the Secretary of Defense, the Secretary of State, or other appropriate officers of the Federal Government

(5) If these requirements are not met, NTIA shall notify the petitioner that the request is declined and why.

(6) If NTIA does not issue a determination under this section within 6 months of the filing of a petition for relocation, the petition for relocation is deemed to be denied.

(7) In making its determination under this section, NTIA shall consult with the affected Federal entity and, as appropriate, the Office of Management and Budget and other executive branch agencies.

(b) *Petition after agreement between the parties.* The auction winner may file a petition for relocation pursuant to § 301.140 of this subpart at anytime after the parties have reached agreement on relocation in negotiations or mediation as provided in § 301.120 of this subpart and submit the agreement as evidence of having met the requirements of the petition for relocation.

(c) *Petition after failure to reach an agreement.* If the parties fail to reach an agreement as provided in § 301.120 and non-binding arbitration has occurred pursuant to § 301.130, the auction winner may file a petition for relocation with NTIA after a decision has been rendered by the arbitrator. Any recommended decision by the arbitrator may be requested by NTIA as part of the record in a petition for relocation under § 301.140. The recommended decision may be a factor, among others, in the NTIA determination on the petition for relocation.

§ 301.150 Request for withdrawal.

If the parties reach an agreement in negotiations or mediation or agree with the decision of the arbitrator, the Federal entity may seek voluntary withdrawal of the assignments that are the subject of the relocation.

Dated: January 11, 2001.

Gregory L. Rohde,

Assistant Secretary for Communications and Information.

[FR Doc. 01–1306 Filed 1–17–01; 8:45 am]

BILLING CODE 3510–60–P

DEPARTMENT OF THE INTERIOR

Fish and Wildlife Service

50 CFR Part 17

RIN 1018–AG71

Endangered and Threatened Wildlife and Plants; Determinations of Whether Designation of Critical Habitat is Prudent for 81 Plants and Proposed Designations for 76 Plants From the Islands of Kauai and Niihau, Hawaii

AGENCY: Fish and Wildlife Service, Interior.

ACTION: Proposed rule; reopening of comment period and public hearing.

SUMMARY: The U.S. Fish and Wildlife Service (Service) gives notice of a public hearing on the prudency determinations for 81 plants and the proposed critical habitat designations for 76 plants from the islands of Kauai and Niihau, Hawaii. In addition, the comment period which originally closed on January 8, 2001, will be reopened. The new comment period and hearing will allow all interested parties to submit oral or written comments on the proposal. We are seeking comments or suggestions from the public, other concerned governmental agencies, the scientific community, industry, or any other interested parties concerning the proposed rule. Comments already submitted on the proposed rule need not be resubmitted as they will be fully considered in the final determination.

DATES: The comment period for this proposal now closes on February 19, 2001. Any comments received by the closing date will be considered in the final decision on this proposal. The public hearing will be held from 1:00 p.m. to 3:00 p.m. and 6:00 p.m. to 8:00 p.m. on Tuesday, February 6, 2001, on the island of Kauai, Hawaii. Prior to the public hearing, the Service will be available from 12:30 to 1:00 p.m. and from 5:30 to 6:00 p.m. to provide information and to answer questions.

ADDRESSES: The public hearing will be held at the Radisson Kauai Beach Resort, Pakalana Room, 4331 Kauai Beach Drive, Lihue, Kauai. Comments and materials concerning this proposal should be sent to the Field Supervisor, U.S. Fish and Wildlife Service, Pacific Islands Ecoregion Office, 300 Ala Moana Boulevard, Room 3–122, P.O. Box 50088, Honolulu, Hawaii 96850. Comments and materials received will be available for public inspection, by appointment, during normal business hours at the above address.

FOR FURTHER INFORMATION CONTACT: Paul Henson, at the above address, phone 808–541–3441, facsimile 808–541–3470.

SUPPLEMENTARY INFORMATION:

Background

On November 7, 2000, the Service published a notice of prudency determinations for 81 plants species and proposed designations of critical habitat for 76 plant species from the islands of Kauai and Niihau, Hawaii, pursuant to the Endangered Species Act of 1973, as amended (Act) in the **Federal Register** (65 FR 66808). The original comment period closed on January 8, 2001. The comment period now closes on February 19, 2001. Written comments should be submitted to the Service (see **ADDRESSES** section).

A total of 95 species historically found on Kauai and Niihau were listed as endangered or threatened species under the Act, between 1991 and 1996. Some of these species may also occur on other Hawaiian islands. At the time each plant was listed, we determined that designation of critical habitat was not prudent because designation would increase the degree of threat to the species and/or would not benefit the species.

Due to litigation, we reconsidered our previous prudency determinations for the 95 plants. From this review, we are proposing that critical habitat is prudent for 76 of these species because the potential benefits of designating critical habitat essential for the conservation of these species outweigh the risks of designation. We are proposing that the designation of critical habitat is not prudent for five species. The remaining 14 species historically found on Kauai and/or Niihau, no longer occur on these islands. However, these species do occur on other islands, so proposed prudency determinations will be made in future rules addressing plants on those islands.

This proposed rule also proposes designation of critical habitat for the 76 species. Twenty-three critical habitat units, covering a total of 24,539.23 hectares (60,636.42 acres), are proposed for designation on the islands of Kauai and Niihau.

Section 4(b)(5)(E) of the Act (16 U.S.C. 1531 *et seq.*), requires that a public hearing be held if it is requested within 45 days of the publication of a proposed rule. In response to a request from a government agency of the State of Hawaii, the Service will hold a public hearing on the date and at the address described in the **DATES** and **ADDRESSES** sections above.

Anyone wishing to make an oral statement for the record is encouraged

to provide a written copy of their statement and present it to the Service at the hearing. In the event there is a large attendance, the time allotted for oral statements may be limited. Oral and written statements receive equal consideration. There are no limits to the length of written comments presented at the hearing or mailed to the Service. Legal notices announcing the date, time, and location of the hearing will be published in newspapers concurrently with the **Federal Register** notice.

Comments from the public regarding the accuracy of this proposed rule are sought, especially regarding:

(1) The reasons why critical habitat for any of these species is prudent or not prudent;

(2) The reasons why any particular area should or should not be designated as critical habitat for any of these species;

(3) Specific information on the amount and distribution of habitat for any of these species;

(4) Land use practices and current or planned activities in the subject areas and their possible impacts on proposed critical habitat;

(5) Any economic or other relevant impacts resulting from the proposed designations of critical habitat, including any impacts on small entities or families; and

(6) Economic and other potential values associated with designating critical habitat for the 76 plant species such as those derived from non-consumptive uses (*e.g.,* hiking, camping, birding, enhanced watershed protection, increased soil retention, ''existence values'', and reductions in administrative costs).

Reopening of the comment period will enable the Service to respond to the request for a public hearing on the proposed action. The comment period on this proposal now closes on February 19, 2001. Written comments should be submitted to the Service office listed in the **ADDRESSES** section.

Author

The primary authors of this notice Benton Pang and Christa Russell (see **ADDRESSES** section).

Authority: The authority for this action is the Endangered Species Act of 1973 (16 U.S.C. 1531 *et seq.*).

Dated: January 3, 2001.

Rowan W. Gould,

Acting Regional Director, Region 1, Fish and Wildlife Service.

[FR Doc. 01–659 Filed 1–17–01; 8:45 am]

BILLING CODE 4310–55–P

DEPARTMENT OF THE INTERIOR

Fish and Wildlife Service

50 CFR Part 17

RIN 1018–AH05

Endangered and Threatened Wildlife and Plants; Proposed Designation of Critical Habitat for Sidalcea oregana var. calva (Wenatchee Mountains checker-mallow)

AGENCY: Fish and Wildlife Service, Interior.

ACTION: Proposed rule.

SUMMARY: We, the U.S. Fish and Wildlife Service (Service), propose to designate critical habitat for *Sidalcea oregana* var. *calva* (Wenatchee Mountains checker-mallow), pursuant to the Endangered Species Act of 1973, as amended (Act). An estimated maximum of 2,486 hectares (6,137 acres) lies within the boundary of the proposed critical habitat designation, located in Chelan County, Washington. If this proposal is made final, section 7 of the Act requires Federal agencies to insure that any action they fund, authorize, or carry out does not result in the destruction or adverse modification of critical habitat. Section 4 of the Act requires us to consider economic and other impacts of specifying any particular area as critical habitat. We solicit data and comments from the public on all aspects of this proposal, including data on the economic and other impacts of the designation. We may revise this proposal to incorporate or address new information received during the comment period.

DATES: We will accept comments until March 19, 2001. Public hearing requests must be received by March 5, 2001.

ADDRESSES: Comment Submission: If you wish to comment, you may submit your comments and materials concerning this proposal by any one of several methods:

You may submit written comments and information to Gerry Jackson, Manager, Western Washington Office, U.S. Fish and Wildlife Service, 510 Desmond Drive SE, Suite 102, Lacey, Washington, 98503–1263.

You may send comments by electronic mail (e-mail) to: checkermallow@fws.gov. See the Public Comments Solicited section below for file format and other information about electronic filing.

You may hand-deliver comments to our Western Washington Office at the address given above.

Comments and materials received, as well as supporting documentation used in the preparation of this proposed rule, will be available for inspection, by appointment, during normal business hours at the address listed above.

FOR FURTHER INFORMATION CONTACT: Ted Thomas, Ecologist, Endangered Species Branch, Western Washington Office (see **ADDRESSES** section) (telephone 360/753–4327; facsimile 360/534–9331).

SUPPLEMENTARY INFORMATION:

Background

Sidalcea oregana var. *calva,* the Wenatchee Mountains checker-mallow, is known to occur at six sites (populations). It is a plant found in mid-elevation wetlands and moist meadows in central Washington. The plant communities where the species is found are usually associated with meadows that have surface water or saturated soils during the spring and early summer. The species may also be found in open conifer forests dominated by *Pinus ponderosa* (ponderosa pine) and *Pseudotsuga menziesii* (Douglas-fir), and on the margins of shrub and hardwood thickets adjacent to seeps, springs, or small drainages. Soils are primarily composed of silt loams and clay loams with a high percentage content of organic material, and they are poorly drained.

A member of the mallow family (Malvaceae), *Sidalcea oregana* var. *calva* is an herbaceous perennial with a stout taproot that branches at the root-crown giving rise to several stems. Plants range in height from 20 to 150 centimeters (cm) (8 to 60 inches (in.)). Plants vary from glabrous (lacking hairs and glands) to pubescent (hairy) or stellate (with star-shaped hairs) below, and finely stellate above. Flower clusters with one to many stalked flowers are arranged singly along a common stem. The flowers have pink petals 1 to 2 cm (0.4 to 0.8 in.) long, and are borne on stalks ranging from 1 to 10 millimeters (mm) (0.04 to 0.4 in.) in length. The calyx (outer whorl of floral parts) ranges from uniformly finely stellate to bristly with a mixture of longer, simple to four-rayed, spreading hairs. These hairs are sometimes as long as 2.5 to 3 mm (0.1 to 0.12 in.) (Hitchcock and Cronquist 1961).

Flowering begins in the middle of June and peaks in the middle to end of July. Fruits are ripe in August. The species reproduces only from seed. Based on examination of seed capsules the production of seed appears to be high (Gamon 1987). The somewhat clumped distribution of mature *Sidalcea oregana* var. *calva* plants suggests that seed dispersal is restricted to the areas near to mature plants, unless the seeds

are moved by animals or transported by water.

The physical and biological habitat features essential to the conservation of *Sidalcea oregana* var. *calva* include open meadows with surface water or saturated upper soil profiles in the spring and early summer; open conifer forests dominated by ponderosa pine and Douglas-fir; and the margins of shrub and hardwood thickets. All of these habitats have surface water or saturated soils well into the early summer. Elevations range from 488 to 1,000 meters (m) (1,600 to 3,300 feet (ft)). The species is generally found on flats or benches, but may also occur in small ravines and occasionally on gently sloping uplands.

Concentrations of *Sidalcea oregana* var. *calva* are found in the wetter portions of moist meadow habitat, in open forests in slight topographic depressions, on the perimeter of shrub and hardwood thickets dominated by quaking aspen (*Populus tremuloides*), and along permanent or intermittent streams in sparsely forested draws. Frequently associated plant species include quaking aspen, black hawthorn (*Crataegus douglasii*), common snowberry (*Symphoricarpos albus*), serviceberry (*Amelanchier alnifolia*), few-flowered peavine (*Lathyrus pauciflorus*), northern mule's-ear (*Wyethia amplexicaulis*), sticky purple geranium (*Geranium viscosissimum*), western bistort (*Polygonum bistortoides*), leafy aster (*Aster foliaceus*), Watson's willow-herb (*Epilobium watsonii*), false hellebore (*Veratrum californica*), and rudbeckia (*Rudbeckia occidentalis*) (Washington Department of Natural Resources (WDNR) 2000). One-half of the *Sidalcea oregana* var. *calva* populations are found in association with *Delphinium viridescens* (Wenatchee larkspur), a former Federal category 1 candidate plant species. The latter species was removed from candidate status on February 28, 1996 (61 FR 7610), because it was found to be more abundant or widespread than previously believed.

At the time the final rule for *Sidalcea oregana* var. *calva* was published (64 FR 71680), just five sites were known to exist. During mid-summer 1999, a sixth population was discovered on private property in Pendleton Canyon, an area that was burned and opened up by the Tyee Fire of 1994. This location is less than 8 kilometers (km) (5 miles (mi)) from the Camas Meadow population.

The wetland and moist meadow complex at Camas Meadows, an area managed as a Natural Area Preserve (NAP) by the WDNR, contains the largest population of *Sidalcea oregana* var. *calva* The Camas Meadow NAP includes approximately 539 hectares (ha) (1,333 acres (ac)) (WDNR 2000), and is located in the rural/wildland interface about 16 km (10 mi) south of Leavenworth, Washington. An estimated 3,300 *Sidalcea oregana* var. *calva* individuals occur there. Low density, rural residential home sites have been developed adjacent to the NAP. Also, the Camas Meadows Bible Camp has occupied the southern perimeter of the meadow since the late 1940s, and the U.S. Forest Service (Forest Service) administers properties surrounding the NAP.

Another population is located north of the Camas Meadow NAP, on land administered by WDNR, and has approximately 30 individual plants. At the time the final rule was published (64 FR 71680), this population occurred on private land. The private landowners have since traded this land to the State.

In addition to these two populations of *Sidalcea oregana* var. *calva*, two other populations of *Sidalcea oregana* var. *calva* are known to be present on private lands. One population, of about 200 individuals, is located at the Mountain Home Resort. The second population is located in Pendleton Canyon, and consists of about 60 plants. The last two known populations are located on Forest Service lands, containing less than 10 individual plants combined. The combined number of individual plants for all six populations is approximately 3,600.

The primary threats to *Sidalcea oregana* var. *calva* include habitat fragmentation and destruction due to alterations of hydrology, rural residential development and associated activities, conversion of native wetlands to orchards and other agricultural uses, competition from native and non-native plants, recreation, seed and plant collection, and fire suppression and associated activities. To a lesser extent, the species is threatened by livestock grazing, road construction, and timber harvesting and associated impacts including changes in surface runoff in the small watersheds in which the plant occurs.

Previous Federal Action

Federal action on *Sidalcea oregana* var. *calva* began when we published an updated Notice of Review for plants, published in the **Federal Register** on December 15, 1980 (45 FR 82480). This notice included *Sidalcea oregana* var. *calva* as a category 1 candidate species. Category 1 candidates were defined as those taxa for which we had sufficient information on the biological vulnerability and threats to support preparation of listing rules. The Notice of Review published on September 27, 1985 (50 FR 39526), included *Sidalcea oregana* var. *calva* as a category 2 candidate species. Category 2 candidates were defined as taxa for which available information indicated that a proposal to list as endangered or threatened was possibly appropriate, but for which persuasive data on biological vulnerability and threats were not sufficient to support a proposed rule.

Notices of review published on February 21, 1990 (55 FR 6184), and September 30, 1993 (58 FR 51144), identified the plant as a category 1 candidate species. Upon publication of the February 28, 1996, Notice of Review (61 FR 7596), we ceased using category designations and included *Sidalcea oregana* var. *calva* as a candidate species. Candidate species are those for which we have on file sufficient information on biological vulnerability and threats to support proposals to list the species as threatened or endangered.

On August 1, 1997, we published the proposed rule to list *Sidalcea oregana* var. *calva* as an endangered species (62 FR 41328). The final determination to list *Sidalcea oregana* var. *calva* as an endangered species was published in the **Federal Register** on December 22, 1999 (64 FR 71680). In the final rule, we found that designation of critical habitat for the species was prudent. Due to insufficient funding in our listing budget at the time, critical habitat designation was deferred in order to focus our limited resources on higher priority critical habitat, including court-ordered designations, and other listing actions (64 FR 71685), while still allowing us to put in place protections needed for the protection of *S. oregana* var. *calva* through the listing process.

Critical Habitat

Critical habitat is defined in section 3 of the Act as—(i) the specific areas within the geographic area occupied by a species, at the time it is listed in accordance with the Act, on which are found those physical or biological features (I) essential to the conservation of the species and (II) that may require special management considerations or protection; and (ii) specific areas outside the geographic area occupied by a species at the time it is listed, upon a determination that such areas are essential for the conservation of the species. ''Conservation'' means the use of all methods and procedures that are necessary to bring an endangered or a threatened species to the point at which listing under the Act is no longer necessary.

Critical habitat receives protection under section 7 of the Act through the prohibition against destruction or adverse modification of critical habitat with regard to actions carried out, funded, or authorized by a Federal agency. Section 7 also requires conferences on Federal actions that are likely to result in the destruction or adverse modification of critical habitat. In our regulations at 50 CFR 402.02, we define destruction or adverse modification as ''* * * the direct or indirect alteration that appreciably diminishes the value of critical habitat for both the survival and recovery of a listed species. Such alterations include, but are not limited to, alterations adversely modifying any of those physical or biological features that were the basis for determining the habitat to be critical.'' Aside from the added protection that may be provided under section 7, the Act does not provide other forms of protection to lands designated as critical habitat. Because consultation under section 7 of the Act does not apply to activities on private or other non-Federal lands that do not involve a Federal nexus, critical habitat designation would not afford any additional protections under the Act against such activities.

In order to be included in a critical habitat designation, the habitat must first be ''essential to the conservation of the species.'' Critical habitat designations identify, to the extent known using the best scientific and commercial data available, habitat areas that provide essential life cycle needs of the species (i.e., areas on which are found the primary constituent elements, as defined at 50 CFR 424.12(b)).

Section 4 requires that we designate critical habitat at the time of listing and based on what we know at the time of the designation. When we designate critical habitat at the time of listing or under short court-ordered deadlines, we will often not have sufficient information to identify all areas of critical habitat. We are required, nevertheless, to make a decision and thus must base our designations on what, at the time of designation, we know to be critical habitat.

Within the geographic area occupied by the species, we will designate only areas currently known to be essential. Essential areas should already have the features and habitat characteristics that are necessary to sustain the species. We will not speculate about what areas might be found to be essential if better information became available, or what areas may become essential over time. If the information available at the time of designation does not show that an area provides essential life cycle needs of the species, then the area should not be included in the critical habitat designation. Within the geographic area occupied by the species, we will not designate areas that do not now have the primary constituent elements, as defined at 50 CFR 424.12(b), that provide essential life cycle needs of the species.

Our regulations state that, ''The Secretary shall designate as critical habitat areas outside the geographic area presently occupied by the species only when a designation limited to its present range would be inadequate to ensure the conservation of the species.'' (50 CFR 424.12(e)). Accordingly, when the best available scientific and commercial data do not demonstrate that the conservation needs of the species require designation of critical habitat outside of occupied areas, we will not designate critical habitat in areas outside the geographic area occupied by the species.

The Service's Policy on Information Standards Under the Endangered Species Act, published in the **Federal Register** on July 1, 1994 (Vol. 59, p. 34271), provides criteria, establishes procedures, and provides guidance to ensure that decisions made by the Service represent the best scientific and commercial data available. It requires Service biologists, to the extent consistent with the Act and with the use of the best scientific and commercial data available, to use primary and original sources of information as the basis for recommendations to designate critical habitat. When determining which areas are critical habitat, a primary source of information should be the listing package for the species. Additional information may be obtained from a recovery plan, articles in peer-reviewed journals, conservation plans developed by states and counties, scientific status surveys and studies, and biological assessments or other unpublished materials (i.e. gray literature).

Habitat is often dynamic, and species may move from one area to another over time. Furthermore, we recognize that designation of critical habitat may not include all of the habitat areas that may eventually be determined to be necessary for the recovery of the species. For these reasons, all should understand that critical habitat designations do not signal that habitat outside the designation is unimportant or may not be required for recovery. Areas outside the critical habitat designation will continue to be subject to conservation actions that may be implemented under Section 7(a)(1) and to the regulatory protections afforded by the section 7(a)(2) jeopardy standard and the Section 9 take prohibition, as determined on the basis of the best available information at the time of the action. We specifically anticipate that federally funded or assisted projects affecting listed species outside their designated critical habitat areas may still result in jeopardy findings in some cases. Similarly, critical habitat designations made on the basis of the best available information at the time of designation will not control the direction and substance of future recovery plans, habitat conservation plans, or other species conservation planning efforts if new information available to these planning efforts calls for a different outcome.

Methods

In determining areas that are essential to conserve *Sidalcea oregana* var. *calva*, we used the best scientific information available to us. This information included habitat suitability and site-specific species information, as well as discussions with Wenatchee National Forest and WDNR scientists about the management and conservation of this species. We have emphasized areas of current and historical *Sidalcea oregana* var. *calva* occurrences; maintenance of the genetic interchange necessary for the viability of a regional metapopulation; and maintenance of the integrity of the watershed hydrologic processes on which the wetlands and moist meadows that support the species depend. A metapopulation is a group of spatially separated populations that can occasionally exchange genes. The populations in a metapopulation are usually thought of as undergoing interdependent extinction and colonization, where individual populations may go extinct, but later recolonize from another population. Linking the known populations provides pathways for gene flow as well as opportunities for colonization by the species of areas where it may be extirpated. We believe that the maintenance of a viable regional metapopulation as well as the integrity of the hydrologic processes that control the wetland and moist meadow habitat are essential to the conservation of *Sidalcea oregana* var. *calva*.

We used data on known and historic locations and soil maps to identify areas important to the species. We mapped critical habitat based on orthoquads and aerial photos available from WDNR, and ground-checked these areas. We included areas with wetland vegetation communities dominated by native grasses and forbs and generally free of

woody shrubs, hardwood trees, or conifers that would produce shade and/or compete with *Sidalcea oregana* var. *calva*. Seeps, springs and riparian corridors that have clay loam and silt loam soils were included because of their importance to maintaining the hydrologic processes that are essential to the conservation of the species. Inclusion of these areas also allows for the natural expansion of *Sidalcea oregana* var. *calva* populations that is essential for the conservation of the species.

Primary Constituent Elements

In accordance with section 3(5)(A)(i) of the Act and regulations at 50 CFR 424.12, in determining which areas to propose as critical habitat, we must consider those physical and biological features (primary constituent elements) that are essential to the conservation of the species. These include, but are not limited to, the following: space for individual and population growth, and for normal behavior; food, water, air, light, minerals or nutrients, or physiological requirements; cover or shelter; sites for breeding, reproduction, or rearing of offspring, germination, or seed dispersal; and habitats that are protected from disturbance or are representative of the historic geographical and ecological distribution of a species.

The primary constituent elements of critical habitat for *Sidalcea oregana* var. *calva* are those that are essential for the primary biological needs of the species. The area we propose to designate as critical habitat provides the primary constituent elements for the species, which include: surface water or saturated upper soil profiles; a wetland plant community dominated by native grasses and forbs, and generally free of woody shrubs and conifers that would produce shade and competition for *Sidalcea oregana* var. *calva*; seeps and springs on fine textured soils (clay loams and silt loams), which contribute to the maintenance of hydrologic processes necessary to support meadows which remain moist into the early summer; and elevations of 488 m–1,000 m (1,600–3,300 ft).

Criteria Used To Identify Critical Habitat

In an effort to map areas that have the features essential to the conservation of the species, we used data on known *Sidalcea oregana* var. *calva* locations. We also considered the existing status of lands in designating areas as critical habitat. *Sidalcea oregana* var. *calva* is known to occur on Federal, State, and private lands. We are not aware of any Tribal lands essential to the conservation of *Sidalcea oregana* var. *calva*, or any in or near the proposed critical habitat designation. However, should we learn of any Tribal lands in the vicinity of the critical habitat designation subsequent to this proposal, we will coordinate with the Tribes before making a final determination as to whether any Tribal lands should be included as critical habitat for *Sidalcea oregana* var. *calva*.

In defining critical habitat boundaries, we made an effort to avoid developed areas, such as towns and other similar lands, that are unlikely to contribute to *Sidalcea oregana* var. *calva* conservation. However, limitations in our ability to map critical habitat for *Sidalcea oregana* var. *calva* did not allow us to exclude all developed areas, such as towns, or housing developments, or other lands unlikely to contain the primary constituent elements essential for conservation of *Sidalcea oregana* var. *calva*. Existing features and structures within the boundaries of the mapped unit, such as buildings, roads, aqueducts, railroads, airports, other paved areas, lawns, and other rural residential landscaped areas will not contain one or more of the primary constituent elements and are, therefore, not critical habitat. Federal actions limited to those areas would not trigger a section 7 consultation, unless they affect the species and/or primary constituent elements in adjacent critical habitat.

Proposed Critical Habitat

We are proposing critical habitat in one unit, comprised of 2,484 ha (6,135 ac). The approximate area, by land ownership, of this unit is shown in Table 1; lands proposed are under private, State, and Federal ownership. All of the proposed critical habitat for *Sidalcea oregana* var. *calva* is in Chelan County, Washington, and includes Camas Creek and the adjacent Pendleton Canyon sub-basin. The area proposed for critical habitat includes all of the lands that have the primary constituent elements below 1,000 m (3,300 ft) within the Camas Creek watershed and in the small tributary within Pendleton Canyon before its confluence with Peshastin Creek, and includes: (1) The entire area encompassed by the Camas Meadow Natural Area Preserve, which is administered by the WDNR; (2) two populations located on Forest Service land; (3) the small drainage north of the Camas Land, administered by the WDNR; and (4) the population on private property located in Pendleton Canyon.

Portions of the designated critical habitat are presumably unoccupied by *Sidalcea oregana* var. *calva* at present, although the entire area has not been recently surveyed. Soil maps indicate that the entire area provides suitable habitat for the species, and there may be additional, but currently unknown, populations present here. Because protection of the hydrological processes is necessary to ensure the viability of the wetland habitat of the species, we consider the entire area essential to the survival, eventual recovery, and delisting of *Sidalcea oregana* var. *calva*.

Wetlands and moist meadow habitat (native grassland and forb-dominated vegetation) suitable for *Sidalcea oregana* var. *calva* is generally surrounded by upland conditions, which are dominated by ponderosa pine and Douglas-fir forests. These upland conditions are less suitable as habitat for the species and are not essential to the conservation of the species. Moist meadow openings within sparse ponderosa pine and Douglas-fir forests, however, are suitable habitat and are included in this proposed critical habitat designation.

Pursuant to the definition of critical habitat in section 3 of the Act, any area so designated must also require ''special managment considerations or protections.'' Some areas essential to the conservation of the species may not be designated critical habitat if they already have adequate special management. Adequate special management or protection is provided by a legally operative plan that addresses the maintenance and improvement of the essential elements and provides for the long-term conservation of the species. The Service considers a plan adequate when it meets all of the following three criteria: (1) The plan provides a conservation benefit to the species (*i.e.,* the plan must maintain or provide for an increase in the species' population or the enhancement or restoration of its habitat within the area covered by the plan); (2) the plan provides assurances that the management plan will be implemented (*i.e.,* those responsible for implementing the plan are capable of accomplishing the objectives, have an implementation schedule and/or have adequate funding to implement the management plan); and, (3) the plan provides assurances the conservation plan will be effective (*i.e.,* it identifies biological goals, has provisions for reporting progress, and is of a duration sufficient to implement the plan and achieve the plan's goals and objectives). If an area is covered by a plan that meets these criteria, it does not

constitute critical habitat as defined by the Act.

The Camas Land NAP is managed by the WDNR, and a final Management Plan (Plan) for the area was approved in June, 2000. The NAP was established in 1989 to protect the large populations of *Sidalcea oregana* var. *calva* and *Delphinium viridescens* (Wenatchee larkspur) that occur at Camas Meadow. The general management policy described in the Plan applies to all NAPs managed by the WDNR. These include: (1) Protection of outstanding examples of rare or vanishing terrestrial or aquatic ecosystems, rare plant and animal species and unique geologic features; (2) the role of NAPs as a baseline to compare with similar ecosystems that are under the influence of human activities; and (3) areas that are important to preserving natural features of scientific or educational value. However, the Plan does not provide a specific management plan or prescription designed to conserve *Sidalcea oregana* var. *calva*, beyond permitting natural ecological and physical processes to continue (WDNR 2000). The Plan does call for management actions to enhance wet meadow habitat, which will benefit *Sidalcea oregana* var. *calva* by removing competing vegetation, including controlling noxious weeds; thinning ponderosa pine in the uplands; and improving and replacing culverts. However, these actions have not yet been implemented, and it is too early to assess their effectiveness.

Although the species is listed as endangered by the WDNR's Natural Heritage Program (1994), there is no State Endangered Species Act in the State of Washington. The WDNR designation provides no legal protection for *Sidalcea oregana* var. *calva*, and there are no State laws that specifically protect plants on State lands. Therefore, we believe that this management plan alone does not provide sufficient protection for *Sidalcea oregana* var. *calva*, and have included the Camas Land NAP within the proposed critical habitat designation.

Private residential properties on the periphery of the Camas Land NAP and the Camas Meadow Bible Camp located on the south side of the Camas Land, within the area designated as critical habitat, are not included in the designation. Private residential properties in the vicinity of the Camas Land NAP have been altered by the planting of lawns, installation of septic systems, and horse pastures. These properties are generally located in upland conditions that do not provide the primary constituent elements of critical habitat necessary for the long-term protection and conservation of *Sidalcea oregana* var. *calva*.

TABLE 1.—APPROXIMATE AREA OF PROPOSED CRITICAL HABITAT IN HECTARES (HA) AND ACRES (AC) [1] IN CHELAN COUNTY, WASHINGTON, BY LAND OWNERSHIP

[Area estimates reflect the proposed critical habitat unit boundaries; however, existing features and structures, such as buildings, roads, aqueducts, railroads, airports, other paved areas, lawns, and other rural residential landscaped areas not containing one or more of the primary constituent elements are not designated as critical habitat for *Sidalcea oregana* var. *calva*]

	Federal	Local/state	Private	Total
Areas Known to be Currently Occupied	0.5 ha (1 ac)	38 ha (94 ac)	0.5 ha (1 ac)	39 ha (96 ac)
Areas of Suitable Habitat of Unknown Occupancy	830 ha (2,050 ac)	540 ha (1,334 ac)	1,075 ha (2,655 ac)	2,445 ha (6,039 ac)
Total				2,484 ha (6,135 ac)

[1] Approximate acres have been converted to hectares (1 ha = 2.47 ac). Hectares and acres greater than 1 have been rounded to the nearest 5, except for totals which are sums of rows or columns.

We have determined that the habitat supporting the population found at the Mountain Home Resort (Resort) is not essential to the conservation of the species. This population is disjunct from the remaining populations, and located in an area entirely surrounded with private residences, private timberlands, and a road administered by Chelan County. The habitat on this property that contains *Sidalcea oregana* var. *calva*, and the former candidate species *Delphinium viridescens*, is confined to a small linear area associated with a drainage ditch adjacent to the Mountain Home road and is bordered on the north and south by gravel access roads leading to residences. It is likely that the habitat resulted from the construction of the road and the creation of the drainage ditch. The habitat is now dominated by non-native, sod-forming grasses and forbs mixed with native vegetation (Dottie Knecht, Forest Service, pers. comm. 2000). The class-B Washington State noxious weed, *Potentilla recta* (sulfur cinquefoil) (Washington Administrative Code 16–750–011) is frequently encountered in monitoring plots at this site, although at low cover (D. Knecht, pers. comm. 2000). Moving out of the occupied habitat and up the hill towards the Resort, the vegetation is also dominated by sod-forming pasture and lawn grasses, including *Agrostis alba* (creeping bentgrass), *Alopecuris pratensis* (meadow foxtail), *Phleum pratense* (timothy grass), and *Bromus inermis* (smooth brome). These species are not consistent with the primary constituent elements.

Through observation of the adjacent properties along the Mountain Home road, it is evident that, if the Resort were not present and the land had not been cleared to create a vista, the marginal habitat where the small population is found at this site would be forested with conifers mixed with hardwood trees and shrubs. Such habitat does not contain the vegetative requirements and open conditions of the primary constituent elements.

The population at the Resort is also disjunct from the other populations of the species, which are more than 16 km (10 mi) distant. Because of fragmentation and the patchy distribution of habitat between this population and other populations of the species, the persistence of this population cannot be assured. We believe that the most appropriate conservation strategy for *Sidalcea oregana* var. *calva* is one that focuses on the protection and expansion of the core habitat of the species rather than the protection of isolated populations of doubtful viability. Except through artificial means, there is no opportunity for gene exchange between this population and the other populations. Although no genetic testing has been conducted for this species, a small population, such as that found at the Resort, is likely to have reduced genetic diversity, which can result in decreased

population viability due to inbreeding (Schemske *et al.* 1994).

Although the ability to predict random environmental events (stochastic events) is low, events such as forest fires (*e.g.,* the 1994 Rat Creek and Hatchery Creek Fires) and rain-on-snow flooding do occur. The effects of these stochastic events are most acute in small populations (Schemske *et al.* 1994). As a result of an increased importance of stochastic processes and changes in ecological interactions in declining populations, the probability of a population extirpation is expected to be negatively correlated with its size (Schemske *et al.* 1994).

The population found at Pendleton Canyon is on privately-owned land that has been included as critical habitat because it has the primary constituent elements required by *Sidalcea oregana* var. *calva*. It is located in a wildland setting with none of the modifications typically associated with a residence, unlike the private residences near Camas Meadow or the population of *Sidalcea oregana* var. *calva* at the Resort which lack the primary constituent elements and have been excluded from critical habitat designation.

The Recovery Team for *Sidalcea oregana* var. *calva* will be providing guidance on recovery planning for this species. The Recovery Team may provide additional guidance regarding the areas proposed for critical habitat designation. We will evaluate any of the Recovery Team's recommendations and re-examine our critical habitat designation, if necessary, to provide for the conservation of the species.

Effects of Critical Habitat Designation

Section 7 Consultation

Section 7(a) of the Act requires that Federal agencies, including the Service, must ensure that actions they fund, authorize, or carry out do not destroy or adversely modify critical habitat to the extent that the action appreciably diminishes the value of the critical habitat for the survival and recovery of the species. Individuals, organizations, States, local governments, and other non-Federal entities are affected by the designation of critical habitat only if their actions occur on Federal lands, require a Federal permit, license, or other authorization, or involve Federal funding.

Under section 7(a) of the Act, Federal agencies, including the Service, evaluate their actions with respect to any species that is proposed or listed as endangered or threatened and with respect to its critical habitat, if any is designated or proposed. Regulations implementing this interagency cooperation provision of the Act are codified at 50 CFR part 402. Section 7(a)(4) and regulations at 50 CFR 402.10 requires Federal agencies to confer with us on any action that is likely to jeopardize the continued existence of a proposed species or result in destruction or adverse modification of proposed critical habitat. Conference reports provide conservation recommendations to assist the agency in eliminating conflicts that may be caused by the proposed action. The conservation recommendations in a conference report are advisory.

We may issue a formal conference report if requested by a Federal agency. Formal conference reports on proposed critical habitat contain a biological opinion that is prepared according to 50 CFR 402.14, as if critical habitat were designated. If such designation occurs, we may adopt the formal conference report as a biological opinion, if no significant new information or changes in the action alter the content of the opinion (see 50 CFR 402.10(d)).

When a species is listed or critical habitat is designated, section 7(a)(2) requires Federal agencies to ensure that activities they authorize, fund, or carry out are not likely to jeopardize the continued existence of the species or to destroy or adversely modify its critical habitat. If a Federal action may affect a listed species or its critical habitat, the responsible Federal agency must enter into consultation with us. Through this consultation, we would advise the agencies whether the permitted actions would likely jeopardize the continued existence of the species or destroy or adversely modify critical habitat.

When we issue a biological opinion concluding that a project is likely to result in the destruction or adverse modification of critical habitat, we also provide reasonable and prudent alternatives to the project, if any are identifiable. Reasonable and prudent alternatives are defined at 50 CFR 402.02 as alternative actions identified during consultation that can be implemented in a manner consistent with the intended purpose of the action, that are consistent with the scope of the Federal agency's legal authority and jurisdiction, that are economically and technologically feasible, and that the Director believes would avoid the likelihood of jeopardizing the continued existence of listed species or resulting in the destruction or adverse modification of critical habitat. Reasonable and prudent alternatives can vary from slight project modifications to extensive redesign or relocation of the project. Costs associated with implementing a reasonable and prudent alternative are similarly variable.

Regulations at 50 CFR 402.16 require Federal agencies to reinitiate consultation on previously reviewed actions in instances where critical habitat is subsequently designated and the Federal agency has retained discretionary involvement or control over the action or such discretionary involvement or control is authorized by law. Consequently, some Federal agencies may request reinitiation of consultation or conferencing with us on actions for which formal consultation has been completed, if those actions may affect designated critical habitat or adversely modify or destroy proposed critical habitat.

Activities on private or State lands requiring a permit from a Federal agency, such as a permit from the U.S. Army Corps of Engineers (Corps) under section 404 of the Clean Water Act, or a section 10(a)(1)(B) permit from the Service, or some other Federal action, including funding (*e.g.,* from the Federal Highway Administration or Federal Emergency Management Agency will also be subject to the section 7 consultation process. Federal actions not affecting listed species or critical habitat, and actions on non-Federal lands that are not federally funded, authorized, or permitted do not require section 7 consultation. Not all of the areas within the unit is capable of supporting Sidalcea oregana var. calva or its primary constituent elements, and such areas would not be subject to section 7 consultation. However, in the interests of having a clear boundary that is readily located on the ground, or because of mapping uncertainties, we have included some areas that may not be critical habitat as described below.

To properly portray the effects of critical habitat designation, we must first compare the section 7 requirements for actions that may affect critical habitat with the requirements for actions that may affect a listed species. Section 7 prohibits actions funded, authorized, or carried out by Federal agencies from jeopardizing the continued existence of a listed species or destroying or adversely modifying the listed species' critical habitat. Actions likely to ''jeopardize the continued existence'' of a species are those that would appreciably reduce the likelihood of the species' survival and recovery. Actions likely to ''destroy or adversely modify'' critical habitat are those that would appreciably reduce the value of critical habitat for the survival and recovery of the listed species.

Common to both definitions is an appreciable detrimental effect on both

survival and recovery of a listed species. Given the similarity of these definitions, actions likely to destroy or adversely modify critical habitat would almost always result in jeopardy to the species concerned, particularly when the area of the proposed action is occupied by the species concerned. Designation of critical habitat in areas known to be occupied by *Sidalcea oregana* var. *calva,* and areas where the species is detected in surveys at the time of the action, is not likely to result in a significant regulatory burden above that already in place due to the presence of the listed species. For some previously reviewed actions, in instances where critical habitat is subsequently designated, and in those cases where activities occur on designated critical habitat where *Sidalcea oregana* var. *calva* is not found at the time of the action, an additional section 7 consultation with the Service not previously required may be necessary for actions funded, authorized, or carried out by Federal agencies.

Section 4(b)(8) of the Act requires us to briefly describe and evaluate in any proposed or final regulation that designates critical habitat those activities involving a Federal action that may adversely modify such habitat or that may be affected by such designation. When determining whether any of these activities may adversely modify critical habitat, we base our analysis on the effects of the action on the entire critical habitat area and not just on the portion where the activity will occur. Adverse effects on constituent elements or segments of critical habitat generally do not result in an adverse modification determination unless that loss, when added to the environmental baseline, is likely to appreciably diminish the capability of the critical habitat to satisfy essential requirements of the species. In other words, activities that may destroy or adversely modify critical habitat include those that alter the primary constituent elements (defined above) to an extent that the value of critical habitat for both the survival and recovery of the *Sidalcea oregana* var. *calva* is appreciably diminished.

Activities that, when carried out, funded, or authorized by a Federal agency, may affect critical habitat and require that a section 7 consultation be conducted include, but are not limited to:

(1) Damming, water diversion, channelization, excess groundwater pumping, repair and replacement of culverts, or other actions that appreciably reduce the hydrologic function and surface area of rivers, streams, seeps or springs;

(2) Timber harvesting and road construction that directly or indirectly effects the hydrology of sites harboring the species;

(3) Rural residential construction that include concrete pads for foundations and the installation of septic systems where a permit under section 404 of the Clean Water Act (33 U.S.C. 1344 *et seq.*) would be required from the Corps;

(4) Activities that alter watershed characteristics in ways that would appreciably reduce groundwater recharge or alter natural flooding regimes to alter natural, dynamic wetland communities. Such activities may include manipulation of vegetation such as timber harvesting, road construction, maintaining an unnatural fire regime either through fire suppression, or too frequent or poorly-timed prescribed fires, residential and commercial development, and grazing of livestock or horses that reduces fire frequency or otherwise degrades watershed values;

(5) Activities that appreciably degrade or destroy native wetland communities, such as livestock or horse grazing, land clearing, harvesting of trees or other forest products, introducing or encouraging the spread of non-native plant species; and

(6) Activities that appreciably alter stream channel morphology such as sand and gravel mining, road construction, channelization, impoundment, watershed disturbances, off-road vehicle use, heavy or poorly planned recreational uses, and possibly other uses.

Any of the above activities that appreciably diminish the value of critical habitat to the degree that they affect the survival and recovery of *Sidalcea oregana* var. *calva* may be considered an adverse modification or destruction of critical habitat. We note that such activities may also jeopardize the continued existence of the species.

If you have questions regarding whether specific activities will constitute destruction or adverse modification of critical habitat resulting from a Federal action, contact Gerry Jackson, Manager, Western Washington Office (see **ADDRESSES** section). Requests for copies of the regulations on listed wildlife, and inquiries about prohibitions and permits may be addressed to the U.S. Fish and Wildlife Service, Branch of Endangered Species, 911 N.E. 11th Ave, Portland, Oregon 97232 (telephone 503/231–2063; facsimile 503/231–6243).

Available Conservation Measures

Activities by the landowners of the Mountain Home Resort have resulted in positive conservation measures for the species. The landowners have cooperated and supported the monitoring of this population by the Forest Service since 1994 when, during the Rat Creek and Hatchery Creek fires, approximately one-half of the area occupied by *Sidalcea oregana* var. *calva* and *Delphinium viridescens* was bulldozed and leveled to create a fire safety zone. After the fires, the landowners permitted the Forest Service and volunteers to restore and plant grass seed on their land to reduce erosion in the small drainage area where these two species occur. Within about 2 years, the hydrologic processes had returned to normal and *Delphinium viridescens* resprouted from rhizomes. *Sidalcea oregana* var. *calva* recolonized by seed from neighboring parent plants and the soil seed bank stored in soils not disturbed by bulldozers.

Economic Analysis

Section 4(b)(2) of the Act requires us to designate critical habitat on the basis of the best scientific and commercial information available and to consider the economic and other relevant impacts of designating a particular area as critical habitat. We may exclude areas from critical habitat upon a determination that the benefits of the exclusions outweigh the benefits of specifying the areas as critical habitat. We cannot exclude the areas from critical habitat when the exclusion will result in the extinction of the species. We will conduct an analysis of the economic impacts of designating these areas as critical habitat prior to making a final determination. When completed, we will announce the availability of this economic analysis with a notice in the **Federal Register**; if necessary, we will reopen the comment period at that time.

Public Comments Solicited

We intend that any final action resulting from this proposal be as accurate and as effective as possible. Therefore, we solicit comments or suggestions from the public, other concerned governmental agencies, the scientific community, industry, or any other interested party concerning this proposed rule. We particularly seek comments concerning:

(1) The reasons why any habitat should or should not be determined to be critical habitat as provided by section 4 of the Act, including whether the benefits of designation will outweigh any benefits of exclusion;

(2) Specific information on the amount and distribution of *Sidalcea oregana* var. *calva* and its habitat, and what habitat is essential to the conservation of the species and why;

(3) Land use practices and current or planned activities in the subject areas and their possible impacts on proposed critical habitat;

(4) Any foreseeable economic or other impacts resulting from the proposed designation of critical habitat, in particular, any impacts on small entities or families; and

(5) Economic and other values associated with designating critical habitat for *Sidalcea oregana* var. *calva* such as those derived from nonconsumptive uses (*e.g.,* hiking, camping, birdwatching, enhanced watershed protection, improved air quality, increased soil retention, and ''existence values.'').

If you submit comments by e-mail, please submit them as an ASCII file and avoid the use of special characters and any form of encryption. Please also include ''Attn: [*RIN number*]'' and your name and return address in your e-mail message. If you do not receive a confirmation from the system that we have received your e-mail message, contact us directly by calling our Western Washington Office at telephone number 360/753–9440.

Our practice is to make comments available for public review during regular business hours, including names and home addresses of respondents. Individual respondents may request that we withhold their home address from the rulemaking record, which we will honor to the extent allowable by law. In some circumstances, we would withhold from the rulemaking record a respondent's identity, as allowable by law. If you wish for us to withhold your name and/or address, you must state this prominently at the beginning of your comment. However, we will not consider anonymous comments. We will make all submissions from organizations or businesses, and from individuals identifying themselves as representatives or officials of organizations or businesses, available for public inspection in their entirety.

Peer Review

In accordance with our policy published on July 1, 1994 (59 FR 34270), we will seek the expert opinions of at least three appropriate and independent specialists regarding this proposed rule. The purpose of this review is to ensure listing decisions are based on scientifically sound data, assumptions, and analyses. We will send these peer reviewers copies of this proposed rule immediately following publication in the **Federal Register**. We will invite these peer reviewers to comment, during the public comment period, on the specific assumptions and conclusions regarding the proposed designation of critical habitat.

We will consider all comments and information received during the 60-day comment period on this proposed rule during preparation of a final rulemaking. Accordingly, the final decision may differ from this proposal.

Clarity of the Rule

Executive Order 12866 requires each agency to write regulations/notices that are easy to understand. We invite your comments on how to make this proposed rule easier to understand including answers to questions such as the following: (1) Are the requirements in the proposed rule clearly stated? (2) Does the proposed rule contain technical language or jargon that interferes with the clarity? (3) Does the format of the proposed rule (grouping and order of sections, use of headings, paragraphing, etc.) aid or reduce its clarity? (4) Is the description of the proposed rule in the **SUPPLEMENTARY INFORMATION** section of the preamble helpful in understanding the proposed rule? What else could we do to make the proposed rule easier to understand? Send any comments that concern how we could make this proposed rule easier to understand to the Gerry Jackson, Manager, Western Washington Office (see **ADDRESSES** section of this rule).

Required Determinations

Regulatory Planning and Review

In accordance with Executive Order 12866, this document is a significant rule and was reviewed by the Office of Management and Budget (OMB). We are preparing a draft analysis of this proposed action, which will be available for public comment, to determine the economic consequences of designating the specific areas as critical habitat. The availability of the draft economic analysis will be announced in the **Federal Register** and in local newspapers so that it is available for public review and comments.

(a) This rule will not have an annual economic effect of $100 million or more or adversely affect an economic sector, productivity, jobs, the environment, or other units of government. *Sidalcea oregana* var. *calva* was listed as an endangered species in 1999. In fiscal years 1999 through 2000, we conducted 1 formal section 7 consultation with a Federal agency to ensure that their actions would not jeopardize the continued existence of the species.

Under the Act, critical habitat may not be adversely modified by a Federal agency action; critical habitat does not impose any restrictions on non-Federal persons unless they are conducting activities funded or otherwise sponsored, authorized, or permitted by a Federal agency (see Table 2 below). Section 7 requires Federal agencies to ensure that they do not jeopardize the continued existence of the species. Based upon our experience with the species and its needs, we conclude that any Federal action or authorized action that could potentially cause an adverse modification of the proposed critical habitat would currently be considered as ''jeopardy'' under the Act in areas occupied by *Sidalcea oregana* var. *calva.* Accordingly, the designation of currently occupied areas as critical habitat does not have any incremental impacts on what actions may or may not be conducted by Federal agencies or non-Federal persons that receive Federal authorization or funding. Designation of unoccupied areas as critical habitat may have impacts on what actions may or may not be conducted by Federal agencies or non-Federal persons who receive Federal authorization or funding. We will evaluate any impact through our economic analysis (under section 4 of the Act; see Economic Analysis section of this rule). Non-Federal persons that do not have a Federal ''sponsorship'' of their actions are not restricted by the designation of critical habitat (however, they continue to be bound by the provisions of the Act concerning ''take'' of the species).

TABLE 2. IMPACTS OF *Sidalcea Oregana* VAR. *Calva* LISTING AND CRITICAL HABITAT DESIGNATION

Categories of activities	Activities potentially affected by species listing only	Additional activities potentially affected by critical habitat designation [1]
Federal activities potentially affected [2].	Activities conducted by the Army Corps of Engineers, U.S. Forest Service, Environmental Protection Agency, Federal Highway Administration.	Activities by these Federal Agencies in any unoccupied critical habitat areas.
Private or other non-Federal activities potentially affected [3].	Activities that require a Federal action (permit, authorization, or funding) and may remove or destroy *Sidalcea oregana* var. *calva* habitat by mechanical, chemical, or other means (*e.g.,* grading, discing, ripping, and tilling, water diversion, impounding, groundwater pumping, irrigation, construction, road building, herbicide application, recreational use, etc.) or appreciably decrease habitat value or quality through indirect effects (*e.g.,* edge effects, invasion of exotic plants or animals, fragmentation of habitat).	Funding, authorization, or permitting such actions by Federal Agencies in any unoccupied critical habitat areas.

[1] This column represents activities potentially affected by the critical habitat designation in addition to those activities potentially affected by listing the species.
[2] Activities initiated by a Federal agency.
[3] Activities initiated by a private or other non-Federal entity that may need Federal authorization or funding.

(b) This rule will not create inconsistencies with other agencies' actions. As discussed above, Federal agencies have been required to ensure that their actions do not jeopardize the continued existence of *Sidalcea oregana* var. *calva* since the listing in 1999. The prohibition against adverse modification of critical habitat is not expected to impose any additional restrictions to those that currently exist in areas of occupied habitat. We will evaluate any impact of designating unoccupied habitat areas through our economic analysis. Because of the potential for impacts on other Federal agency activities, we will continue to review this proposed action for any inconsistencies with other Federal agency actions.

(c) This proposed rule, if made final, will not materially affect entitlements, grants, user fees, loan programs, or the rights and obligations of their recipients. Federal agencies are currently required to ensure that their activities do not jeopardize the continued existence of the species, and, as discussed above, we do not anticipate that the adverse modification prohibition (resulting from critical habitat designation) will have any incremental effects in areas of occupied habitat.

(d) This rule will not raise novel legal or policy issues. The proposed rule follows the requirements for determining critical habitat contained in the Act.

Regulatory Flexibility Act (5 U.S.C. 601 et seq.)

In the economic analysis (required under section 4 of the Act), we will determine whether designation of critical habitat will have a significant effect on a substantial number of small entities. Many of these activities sponsored by Federal agencies within the proposed critical habitat areas are carried out by small entities (as defined by the Regulatory Flexibility Act) through contract, grant, permit, or other Federal authorization. As discussed under Regulatory Planning and Review above, this rule is not expected to result in any restrictions in addition to those currently in existence for areas of occupied critical habitat. We will also evaluate whether critical habitat designation of unoccupied areas will significantly affect a substantial number of small entities. As indicated on Table 1 (see Proposed Critical Habitat Designation section), we designated property owned by State and Federal governments, and private property.

Within these areas, the types of Federal actions or authorized activities that we have identified as potential concerns are:

(1) Activities such as damming, water diversion, channelization, excess groundwater pumping, repair and replacement of culverts, or other actions that appreciably reduce the hydrologic function and surface area of rivers, streams, seeps or springs;

(2) Activities such as timber harvesting and road construction that directly or indirectly effects the hydrology of sites harboring the species; and

(3) Activities such as rural residential construction that include concrete pads for foundations and the installation of septic systems where a permit under section 404 of the Clean Water Act (33 U.S.C. 1344 *et seq.*) would be required from the Corps.

(4) Activities that alter watershed characteristics in ways that would appreciably reduce groundwater recharge or alter natural flooding regimes to alter natural, dynamic wetland communities. Such activities may include manipulation of vegetation such as timber harvesting, road construction, maintaining an unnatural fire regime either through fire suppression, or too frequent or poorly-timed prescribed fires, residential and commercial development, and grazing of livestock or horses that reduces fire frequency or otherwise degrades watershed values;

(5) Activities that appreciably degrade or destroy native wetland communities, such as livestock or horse grazing, land clearing, harvesting of trees or other forest products, introducing or encouraging the spread of non-native plant species; and

(6) Activities that appreciably alter stream channel morphology such as sand and gravel mining, road construction, channelization, impoundment, watershed disturbances, off-road vehicle use, heavy or poorly planned recreational uses, and possibly other uses.

Small Business Regulatory Enforcement Fairness Act (5 U.S.C. 804(2))

In the economic analysis, we will determine whether designation of critical habitat will cause (a) any effect on the economy of $100 million or more, (b) any increases in costs or prices for consumers, individual industries, Federal, State, or local government agencies, or geographic regions; or (c) any significant adverse effects on competition, employment, investment, productivity, innovation, or the ability of U.S.-based enterprises to compete with foreign-based enterprises. As discussed above, we anticipate that the designation of critical habitat will not have any additional effects on these activities in areas of critical habitat occupied by the species.

Designation of unoccupied areas as critical habitat may have impacts on what actions may or may not be

conducted, or how they will be conducted, by Federal agencies or non-Federal persons who receive Federal authorization or funding. We will evaluate any impact through our economic analysis.

Unfunded Mandates Reform Act (2 U.S.C. 1501 *et seq.*)

In accordance with the Unfunded Mandates Reform Act (2 U.S.C. 1501 *et seq.*):

(a) We believe this rule will not ''significantly or uniquely'' affect small governments. A Small Government Agency Plan is not required. Small governments will be affected only to the extent that any programs having Federal funds, permits, or other authorized activities must ensure that their actions will not adversely affect the critical habitat. However, as discussed above, these actions are currently subject to equivalent restrictions through the listing protections of the species, and no further restrictions are anticipated to result from critical habitat designation of occupied areas. In our economic analysis, we will evaluate whether designation of unoccupied areas has any significant effect on small governments.

(b) This rule will not produce a Federal mandate of $100 million or greater in any year; that is, it is not a ''significant regulatory action'' under the Unfunded Mandates Reform Act. The designation of critical habitat imposes no obligations on State or local governments.

Takings

In accordance with Executive Order 12630, this rule does not have significant takings implications. A takings implication assessment is not required. As discussed above, the designation of critical habitat affects only Federal agency actions. The rule will not increase or decrease the current restrictions on private property concerning take of *Sidalcea oregana* var. *calva.* Due to current public knowledge of the species' protection under the Act, the prohibition against take of the species both within and outside of the designated areas, and the fact that critical habitat provides no incremental restrictions in areas of occupied critical habitat, we do not anticipate that property values will be affected by the critical habitat designation. Additionally, critical habitat designation does not preclude development of habitat conservation plans and issuance of incidental take permits.

Federalism

In accordance with Executive Order 13132, the rule does not have significant Federalism effects. A Federalism assessment is not required. In keeping with Department of the Interior and Department of Commerce policy, we requested information from and coordinated development of this critical habitat proposal with appropriate State resource agencies in Washington. The designation of critical habitat in areas currently occupied by Sidalcea oregana var. calva imposes no additional restrictions to those currently in place and, therefore, has little incremental impact on State and local governments and their activities. The designation may have some benefit to these governments in that the areas essential to the conservation of the species are more clearly defined, and the primary constituent elements of the habitat necessary to the survival of the species are specifically identified. While making this definition and identification does not alter where and what federally sponsored activities may occur, it may assist these local governments in long-range planning (rather than waiting for case-by-case section 7 consultations to occur).

Civil Justice Reform

In accordance with Executive Order 12988, the Office of the Solicitor has determined that this rule does not unduly burden the judicial system and meets the requirements of sections 3(a) and 3(b)(2) of the Order. We propose to designate critical habitat in accordance with the provisions of the Act and plan a public hearing on the proposed designation during the comment period. The rule uses standard property descriptions and identifies the primary constituent elements within the designated areas to assist the public in understanding the habitat needs of *Sidalcea oregana* var. *calva.*

Paperwork Reduction Act of 1995 (44 U.S.C. 3501 *et seq.*)

This rule does not contain any information collection requirements that requires Office of Management and Budget approval under the Paperwork Reduction Act.

National Environmental Policy Act

We determined that we do not need to prepare an Environmental Assessment and/or an Environmental Impact Statement as defined by the National Environmental Policy Act of 1969 in connection with regulations adopted pursuant to section 4(a) of the Endangered Species Act, as amended. We published a notice outlining our reasons for this determination in the **Federal Register** on October 25, 1983 (48 FR 49244).

Government-to-Government Relationship With Tribes

In accordance with the President's memorandum of April 29, 1994, ''Government-to-Government Relations with Native American Tribal Governments'' (59 FR 22951) and 512 DM 2, we understand that federally recognized Tribes must be related to on a Government-to-Government basis.

We are not aware of any Tribal lands essential for the conservation of *Sidalcea oregana.* var *calva.* therefore, we are not proposing to designate critical habitat for *Sidalcea oregana* var. *calva* on Tribal lands.

References Cited

Gamon, J. G. 1987. Report on the status of *Sidalcea oregana* (Nutt.) Gray var. *calva* C.L. Hitchcock. Unpublished report to the U.S. Fish and Wildlife Service, Olympia Washington. 41 pp.

Schemske, D.W., B.C. Husband, M.H. Ruckleshaus, C. Goodwillie, I.M. Parker, and J.G. Bishop. 1994. Evaluating approaches to the Conservation of Rare and Endangered Plants. Ecology, 75(3). Pp. 584–606.

Hitchcock, C.L., A. Cronquist, M. Ownbey, and J.W. Thompson. 1961. Part 3. Vascular plants of the Pacific Northwest. University of Washington Press, Seattle. 614 pp.

Washington Department of Natural Resources. 2000. Management plan for Camas Meadows Natural Area Preserve. Unpublished report. 52 pp + appendices.

Washington Natural Heritage Program. 1994. Endangered, threatened, and sensitive vascular plants of Washington, Department of Natural Resources, Olympia, Washington. 52 pp.

Author

The primary author of this proposed rule is Ted Thomas (see **ADDRESSES** section).

List of Subjects in 50 CFR Part 17

Endangered and threatened species, Exports, Imports, Reporting and recordkeeping requirements, Transportation.

Proposed Rule Promulgation

Accordingly, we propose to amend part 17, subchapter B of chapter I, title 50 of the Code of Federal Regulations as set forth below:

PART 17—[AMENDED]

1. The authority citation for part 17 continues to read as follows:

Authority: 16 U.S.C. 1361–1407; 16 U.S.C. 1531–1544; 16 U.S.C. 4201–4245; Pub. L 99–625, 100 Stat. 3500; unless otherwise noted.

2. In § 17.12(h) revise the entry for *Sidalcea oregana* var. *calva* under ''FLOWERING PLANTS'' to read as follows:

§ 17.12 Endangered and threatened plants.

* * * * *

(h) * * *

Species		Historic range	Family	Status	When listed	Critical habitat	Special rules
Scientific name	Common name						
FLOWERING PLANTS							
*	*	*	*	*	*		*
Sidalcea oregana var. *calva*.	Wenatchee Mountains checker-mallow.	U.S.A. (WA)	Malvaceae—(Mallow).	E	673	17.96(a)	N/A
*	*	*	*	*	*		*

3. In § 17.96, as proposed to be amended at 65 FR 66865, November 7, 2000, amend paragraph (b) by adding an entry for *Sidalcea oregana* var. *calva* after the entry for *Kokia drynarioides* under the family Malvaceae to read as follows:

§ 17.96 Critical habitat-plants.

* * * * *

(b) * * *

Family Malvaceae: *Sidalcea oregana* var. *calva* (Wenatchee Mountains checker-mallow).

Washington, Chelan County. From USGS 7.5′ quadrangle maps Peshastin and Tip Top, Washington. T. 23 N., R 18 E., beginning at a point on Camas Creek in the NW¼ of NW¼ of section 35 at approximately 47°26′52″N latitude and 120°38′57″ W longitude proceeding downstream (northwesterly), expanding in all directions to include the entire wetland complex that comprises the Camas Meadow Natural Area Preserve, to a point approximately 0.4 km (0.25 mi) from the confluence of Pendleton Creek and Peshastin Creek, located at 47°31′06″ and 120°37′18″ W longitude. From this last point, the western boundary of the designated critical habitat parallels Peshastin Creek to a point at the southwest of the designated area located at 47°28′46″ N latitude and 120°38′57″ W longitude. The maximum elevation of the designated critical habitat is 1,000 m (3,300 ft) and the lowest elevation is 488 m (1,600 ft).

Within this area, critical habitat includes water courses and wetland habitat out to the beginning of upland habitat. Critical habitat does not include existing features and structures, such as buildings, roads, aqueducts, railroads, airports, other paved areas, lawns, and other rural residential landscaped areas not containing one or more of the primary constituent elements.

Known primary constituent elements of critical habitat for *Sidalcea oregana* var. *calva* include: surface water or saturated upper soil profiles; a wetland plant community dominated by native grasses and forbs, and generally free of woody shrubs and conifers that would produce shade and competition for *Sidalcea oregana* var. *calva*; seeps and springs on fine textured soils (clay loams and silt loams), which contribute to the maintenance of hydrologic processes necessary to support meadows which remain moist into the early summer; and elevations of 488 m-1,000 m (1,600–3,300 ft).

Note: Map follows:

* * * * *

BILLING CODE 4310–55–P

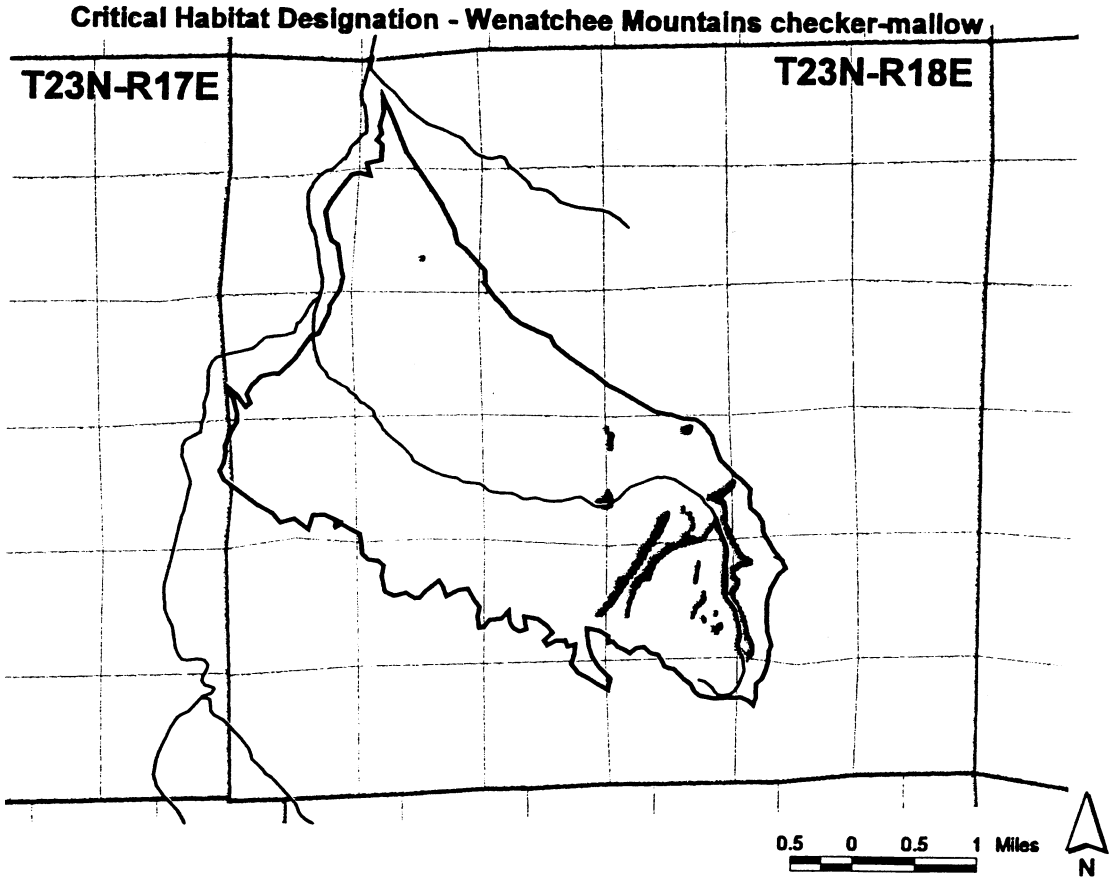

Dated: December 27, 2000.

Kenneth L. Smith,

Assistant Secretary for Fish and Wildlife and Parks.

[FR Doc. 01–1333 Filed 1–17–01; 8:45 am]

BILLING CODE 4310–55–C

Notices

Federal Register

Vol. 66, No. 12

Thursday, January 18, 2001

This section of the FEDERAL REGISTER contains documents other than rules or proposed rules that are applicable to the public. Notices of hearings and investigations, committee meetings, agency decisions and rulings, delegations of authority, filing of petitions and applications and agency statements of organization and functions are examples of documents appearing in this section.

DEPARTMENT OF AGRICULTURE

Forest Service

Intent to Prepare an Environmental Impact Statement for Southwestern Region, Arizona, Coconino County, Coconino National Forests

AGENCY: Forest Service, USDA.

SUMMARY: The Coconino National Forest is planning to prepare an environmental impact statement on a proposal to improve grassland and woodland conditions for wildlife and manage livestock grazing use on the Pickett Lake and Padre Canyon Grazing Allotments during the next 10 years.

DATES: Comments in response to this Notice of Intent concerning the scope of the analysis should be received in writing by on or before February 20, 2001.

ADDRESSES: Send written comments to USDA Forest Service, Coconino National Forest, Peaks Ranger Station, 5075 N Hwy 89, Flagstaff, AZ 86004. Electronic mail may be sent to mhannemann@fs.fed.us.

Responsible Official: The Forest Supervisor of the Coconino National Forest, Supervisor's Office 2323 Greenlaw Lane, Flagstaff, AZ 86004, will decide what actions are most appropriate for managing the Pickett and Padre Range Allotments.

FOR FURTHER INFORMATION CONTACT: Mike Hannemann, Interdisciplinary Team Leader, Peaks Ranger District, (520) 526–0866.

SUPPLEMENTARY INFORMATION: This proposal includes 14,774 acres of pinyon, juniper and ponderosa pine treatments. Ponderosa pine cuts would be on trees <6″ in diameter at breast height (DBH). Slash crushing and seeding will be done in pinyon and juniper treatment areas where slash is heavy and dense trees have removed the grass seed source from the area. Approximately $258,810 will be spent on cutting the trees. Approximately $95,500 will be spent on slash crushing, harrowing and seeding. Approximately $126,500 would be spent on archaeological surveys on the tree cutting areas. The Forest Service will look for grants and partners to supplement normal Forest Service funds to complete the pinyon and juniper treatments, slash crushing, harrowing and seeding.

This proposal also has a Forest Service permit of up to 850 cattle from June 1 to September 30 on the 34,814 acres Pickett Lake Allotment and up to 125 cattle from August 1 to September 30 on the 20,993 acres Padre Canyon Allotment. This is a 10% reduction in cattle use on Pickett Lake Allotment and a 31% reduction in cattle use on the Padre Canyon Allotment. In addition, this proposal has a combined grazing system option of up to 913 cattle from June 1 to September 30 on both allotment areas, a 14% overall reduction in cattle use. In addition to maintaining current range structures, approximately $25,600 will be spent on one mile of barbwire fence, four miles of pipeline and five drinkers. The Forest Service will spend approximately $13,700 primarily for materials and the permittee will spend approximately $11,900 primarily for installation of the improvements.

Preliminary issues include the effect of grazing on the environment, especially watershed conditions and pronghorn antelope habitat.

The Proposed action was mailed to 104 individuals, organizations and cooperating resource agencies for review and comment on January 5, 2001. From comments received, the Team will develop statements to capture the substantive issues and developed alternatives other than the proposed action. If you would like a copy of the proposed action please contact our office. Your comments will be included in our environmental analysis.

It is anticipated that environmental analysis and preparation of the draft and final environmental impact statements will take about six months. The Draft Environmental Impact Statement can be expected April of 2001 and the Final EIS in summer. The comment period on the draft environmental impact statement extends 45 days from the date the Environmental Protection Agency publishes the notice of availability in the **Federal Register**.

The Forest Service believes, at this early stage, it is important to give reviewers notice of several court rulings related to public participation in the environmental review process. To be the most helpful, comments on the draft environmental impact statement should be as specific as possible and may address the adequacy of the statement or the merits of the alternatives discussed (see Council of Environmental Quality Regulations for implementing the procedural provisions of the National Environmental Policy Act at 40 CFR 1503.3).

In addition, Federal court decisions have established that reviewers of draft environmental impact statements must structure their participation in the environmental review of the proposal so that it is meaningful and alerts an agency to the reviewers' position and contentions. *Vermont Yankee Nuclear Power Corp.* v. *NRDC* 435 US 519, 553 (1978). Environmental objections that could have been raised at the draft state may be waived if not raised until after completion of the final environmental impact statement. *City of Angoon* v. *Hodel 9th Circuit,* 1986) and *Wisconsin Heritages, Inc* v. *Harris,* 490F. Supp. 1334, 1338 (E.D. Wis. 1980). The reason for this is to ensure that substantive comments and objections are made available to the Forest Service at a time when it can meaningfully consider them in the final environmental impact statement.

To assist the Forest Service in identifying and considering issues and concerns on the proposal action, comments on the draft environmental impact statement should be as specific as possible. It is also helpful if comments refer to specific pages or chapters of the draft statement. Comments may also address the adequacy of the draft environmental impact statement or the merits of the alternatives formulated and discussed in the statement. Reviewers may wish to refer to the Council of Environmental Quality Regulations for implementing the procedural provisions of the National Environmental Policy Act at 40 CFR 1503.3 in addressing these points.

Dated: January 5, 2001.

Jim Golden,

Forest Supervisor.

[FR Doc. 01–1391 Filed 1–17–01; 8:45 am]

BILLING CODE 3410–11–M

DEPARTMENT OF AGRICULTURE

Forest Service

Intergovernmental Advisory Committee Meeting

AGENCY: Forest Service, USDA.

ACTION: Notice of meeting.

SUMMARY: The Intergovernmental Advisory Committee (IAC) will meet on February 1, 2001, at the Hilton Hotel, 921 SW 6th Avenue, Portland, Oregon 97204–1296. The purpose of the meeting is to continue discussions on the implementation of the Northwest Forest Plan (NFP). The meeting will begin at 9:30 a.m. and continue until 3:30 p.m. Agenda items to be discussed include, but are not limited to: IAC Topics for advice, the Aquatic Riparian Effectiveness Monitoring Plan, and an update on the survey and Manage Record of Decision. The IAC meeting will be open to the public and is fully accessible for people with disabilities. Interpreters are available upon request in advance. Written comments may be submitted for the record at the meeting. Time will also be scheduled for oral public comments. Interested persons are encouraged to attend.

FOR FURTHER INFORMATION CONTACT: Questions regarding this meeting may be directed to Steve Odell, Executive Director, Regional Ecosystem Office, 333 SW, 1st Avenue, P.O. Box 3623, Portland, OR 97208 (Phone: 503–808–2166).

Dated: January 11, 2001.

Stephen J. Odell,

Designated Federal Official.

[FR Doc. 01–1467 Filed 1–17–01; 8:45 am]

BILLING CODE 3410–11–M

DEPARTMENT OF COMMERCE

Bureau of Export Administration

Action Affecting Export Privileges; Michel V. Diago; Order Amending the Order Denying Permission To Apply for or Use Export Licenses

On, September 7, 1997, the acting director of the Office of Exporter Services entered an Order (the 1994 Order) against Michel V. Daigo denying his export privileges until February 25, 2003, based upon his February 25, 1993, conviction in the Untied States District Court for the Northern District of California of violating the Export Administration Act of 1979 as amended (50 U.S.C.A. app. 2401–2420 (1991, Supp. 1993, and Public Law 103–277, July 5, 1994) [1] the Act). The 1994 Order was issued under the authority of Section1 1(h) of the Act and Sections 766.25 and 750.8(a) of the Export Administration Regulations (currently codified at 15 CFR Parts 730–774 (1999)) (the Regulations). The 1994 Order was published in the **Federal Register** (50 FR 47299, September 15, 1994).

In the Matter of: MICHAEL V. DIAGO, 1183 Calle del Arroyo, Sonoma, California 95476.

On, October 18, 1994 Diago, through counsel, filed an appeal from the Order with the Under Secretary for Export Administration (Under Secretary), pursuant to Part 789 (currently Part 756) of the Regulations. On December 22, 2000, the Under Secretary issued his final decision on that appeal and granted partial relief from the terms of the 1994 Order by terminating the denial period as of December 31, 2000.

Accordingly, the 1994 Order is hereby amended to as follows:

Ordered

I. The date ''February 25, 2003'' in fourth paragraph and in the paragraphs labeled II and V of the 1994 Order is amended to read December 31, 2000.

II. A copy of this Order shall be delivered to Diago. This Order shall be published in the **Federal Register.**

Dated: January 2, 2001.

Eileen Albanese,

Director, Office of Exporter Services.

[FR Doc. 01–1392 Filed 1–17–01; 8:45 am]

BILLING CODE 3510–DT–M

DEPARTMENT OF COMMERCE

International Trade Administration

Antidumping or Countervailing Duty Order, Finding, or Suspended Investigation; Opportunity to Request Administrative Review

AGENCY: Import Administration, International Trade Administration, Department of Commerce.

ACTION: Notice of opportunity to request administrative review of antidumping or countervailing duty order, finding, or suspended investigation.

Background

Each year during the anniversary month of the publication of an antidumping or countervailing duty order, finding, or suspension of investigation, an interested party, as defined in section 771(9) of the Tariff Act of 1930, as amended (the Act), may request, in accordance with section 351.213 (2000) of the Department of Commerce (the Department) regulations, that the Department conduct an administrative review of that antidumping or countervailing duty order, finding, or suspended investigation.

Opportunity to Request a Review:

Not later than the last day of January 2001, interested parties may request an administrative review of the following orders, findings, or suspended investigations, with anniversary dates in January for the following periods:

	Period
Antidumping duty proceedings	
Brazil: Brass Sheet and Strip, A–351–603	1/1/00–12/31/00
Brazil: Stainless Steel Wire Rod, A–351–819	1/1/00–12/31/00
Canda: Brass Sheet and Strip, A–122–601	1/1/00–12/31/00
France: Anhydrous Sodium Metasilicate (ASM), A–427–098	1/1/00–12/31/00
France: Stainless Steel Wire Rods, A–427–811	1/1/00–12/31/00
Taiwan: Stainless Steel Cooking Ware, A–583–603	1/1/00–12/31/00
The People's Republic of China: Potassium Permanganate, A–570–001	1/1/00–12/31/00
The Republic of Korea: Stainless Steel Cooking Ware, A–580–601	1/1/00–12/31/00

[1] The Act expired on August 20, 1994, Executive Order 12924 (3 CFR 1994 Comp. 917 (1995)), extended by Presidential Notices of August 15, 1995 (3 CFR, 1995 Comp. 501 (1996)), August 14, 1996 (3 CFR 1996 Comp. 298 (1997)), August 13, 1997 (3 CFR 1997 Comp. 306 (1998)), and August 13, 1998 (3 CFR, 1998 Comp. 294 (1999)), continued the Export Administration Regulations in effect under IEEPA. The Act was renewed and signed into law by the President on November 13, 2000.

	Period
Countervailing Duty Proceedings	
Brazil: Brass Sheet and Strip, C–351–604	1/1/00–12/31/00
Taiwan: Stainless Steel Cooking Ware, C–583–604	1/1/00–12/31/00
The Republic of Korea: Stainless Steel Cooking Ware, C–580–602	1/1/00–12/31/00
Suspension Agreements	
Japan: Sodium Azide, A–588–839	1/1/00–12/31/00

In accordance with section 351.213(b) of the regulations, an interested party as defined by section 771(9) of the Act, may request in writing that the Secretary conduct an administrative review. For both antidumping and countervailing duty reviews, the interested party must specify the individual producers or exporters covered by an antidumping finding or an antidumping or countervailing duty order or suspension agreement for which it is requesting a review, and the requesting party must state why it desires the Secretary to review those particular producers or exporters. If the interested party intends for the Secretary to review sales of merchandise by an exporter (or a producer if that producer also exports merchandise from other suppliers) which were produced in more than one country of origin and each country of origin is subject to a separate order, then the interested party must state specifically, on an order-by-order basis, which exporter(s) the request is intended to cover.

Six copies of the request should be submitted to the Assistant Secretary for Import Administration, International Trade Administration, Room 1870, U.S. Department of Commerce, 14th Street & Constitution Avenue, NW., Washington, DC 20230. The Department also asks parties to serve a copy of their requests to the Office of Antidumping/Countervailing Enforcement, Attention: Sheila Forbes, in room 3065 of the main Commerce Building. Further, in accordance with section 351.303(f)(l)(i) of the regulations, a copy of each request must be served on every party on the Department's service list.

The Department will publish in the **Federal Register** a notice of ''Initiation of Administrative Review of Antidumping or Countervailing Duty Order, Finding, or Suspended Investigation'' for requests received by the last day of January 2001. If the Department does not receive, by the last day of January 2001, a request for review of entries covered by an order, finding, or suspended investigation listed in this notice and for the period identified above, the Department will instruct the Customs Service to assess antidumping or countervailing duties on those entries at a rate equal to the cash deposit of (or bond for) estimated antidumping or countervailing duties required on those entries at the time of entry, or withdrawal from warehouse, for consumption and to continue to collect the cash deposit previously ordered.

This notice is not required by statute but is published as a service to the international trading community.

Dated: January 11, 2001.

Holly A. Kuga,

Acting Deputy Assistant Secretary, Group II for Import Administration.

[FR Doc. 01–1518 Filed 1–17–01; 8:45 am]

BILLING CODE 3510–DS–P

DEPARTMENT OF COMMERCE

National Oceanic and Atmospheric Administration

Evaluation of Coastal Zone Management Programs

AGENCY: Office of Ocean and Coastal Resource Management, National Ocean Service, National Oceanic and Atmospheric Administration (NOAA), DOC.

ACTION: Notice of intent to evaluate.

SUMMARY: The NOAA Office of Ocean and Coastal Resource Management (OCRM) announces its intent to evaluate the performance of the Commonwealth of the Northern Mariana Islands Coastal Management Program, the California San Francisco Bay Conservation and Development Commission/State Coastal Conservancy Coastal Program, and the Puerto Rico Coastal Management Program.

These evaluations will be conducted pursuant to section 312 of the Coastal Zone Management Act of 1972 (CZMA), as amended and regulations at 15 CFR Part 923.

The CZMA requires continuing review of the performance of states with respect to coastal program implementation. Evaluation of Coastal Zone Management Programs require findings concerning the extent to which a state has met the national objectives, adhered to its coastal program document approved by the Secretary of Commerce, and adhered to the terms of financial assistance awards funded under the CZMA.

The evaluations will include a site visit, consideration of public comments, and consultations with interested Federal, State, and local agencies and members of the public. Public meetings will be held as part of the site visits.

Notice is hereby given of the dates of the site visits for the listed evaluations, and the dates, local times, and locations of the public meetings during the site visits.

The Commonwealth of the Northern Mariana Islands Coastal Management Program evaluation site visit will be from February 26–March 9, 2001. One public meeting will be held during the week. The public meeting will be held on Tuesday, March 6, 2001, at 5:30 p.m., at the Joeten Kiyu Library, Saipan.

The California San Francisco Bay Conservation and Development Commission/State Coastal Conservancy Coastal Program site visit will be from March 5–9, 2001. One public meeting will be held during the week. The public meeting will be held on Wednesday, March 7, 2001, from 4–6 p.m., in the McAteer-Petris Room, at the BCDC offices, 50 California Street, Suite 2600, San Francisco, California.

The Puerto Rico Coastal Management Program evaluation site visit will be from March 12–16, 2001. One public meeting will be held during the week. The public meeting will be held on Tuesday, March 13, 2001, at 6 p.m., at The Department of Natural and Environmental Resources Auditorium, Avenue Munoz Rivera, Stop 3½, San Juan, Puerto Rico.

Copies of States' most recent performance reports, as well as OCRM's notifications and supplemental request letters to the States, are available upon request from OCRM. Written comments from interested parties regarding these Programs are encouraged and will be accepted until 15 days after the public meeting. Please direct written comments to Margo E. Jackson, Deputy Director, Office of Ocean and Coastal Resource Management, NOS/NOAA, 1305 East-West Highway, 10th Floor, Silver Spring, Maryland 20910. When the evaluations are completed, OCRM will place a notice in the **Federal Register**

announcing the availability of the Final Evaluation Findings.

FOR FURTHER INFORMATION CONTACT: Margo E. Jackson, Deputy Director, Office of Ocean and Coastal Resource Management, NOS/NOAA, 1305 East-West Highway, Silver Spring, Maryland 20910, (301) 713–3155, Extension 114.

(Federal Domestic Assistance Catalog 11.419 Coastal Zone Management Program Administration)

Dated: January 10, 2001.

Capt. Ted I. Lillestolen,

Deputy Assistant Administrator for Ocean Services and Coastal Zone Management.

[FR Doc. 01–1525 Filed 1–17–01; 8:45 am]

BILLING CODE 3510–08–M

DEPARTMENT OF DEFENSE

Department of the Air Force

Air University Board of Visitors; Notice of Meeting

The Air University Board of Visitors will hold an open meeting on April 22–25, 2001, with the first business session beginning at 8:30 a.m. in the Air University Commander's Conference Room at Headquarters Air University, Maxwell Air Force Base, Alabama. (Five seats are available.)

The purpose of the meeting is to give the board an opportunity to review Air University educational programs and to present to the Commander, a report of their findings and recommendations concerning these programs.

For further information on this meeting, contact Dr. Dorothy Reed, Chief of Academic Affairs, Air University Headquarters, Maxwell Air Force Base, Alabama 36112–6335, (334) 953–5159.

Janet A. Long,

Air Force Federal Register Liaison Officer.

[FR Doc. 01–1393 Filed 1–17–01; 8:45 am]

BILLING CODE 5001–05–P

DEPARTMENT OF DEFENSE

Department of the Air Force

Air Force Institute of Technology (AFIT) Subcommittee of the Air University Board of Visitors; Notice of Meeting

The AFIT Subcommittee of the Air University Board of Visitors will hold an open meeting on March 25–27, 2001, with the first business session beginning at 8:30 a.m. in the Commandant's Conference Room, Building 125, Wright-Patterson Air Force Base, Ohio. (Five seats are available.)

The purpose of the meeting is to give the Board an opportunity to review Air Force Institute of Technology's educational programs and to present to the Commandant a report of their findings and recommendations concerning these programs.

For further information on this meeting, contact Ms. Beverly Houtz in the Directorate of Resources, Air Force Institute of Technology, (937) 255–5760.

Janet A. Long,

Air Force Federal Register Liaison Officer.

[FR Doc. 01–1394 Filed 1–17–01; 8:45 am]

BILLING CODE 5001–05–P

DEPARTMENT OF EDUCATION

Submission for OMB Review; Comment Request

AGENCY: Department of Education.

SUMMARY: The Leader, Regulatory Information Management Group, Office of the Chief Information Officer invites comments on the submission for OMB review as required by the Paperwork Reduction Act of 1995.

DATES: Interested persons are invited to submit comments on or before February 20, 2001.

ADDRESSES: Written comments should be addressed to the Office of Information and Regulatory Affairs, Attention: Lauren Wittenberg, Acting Desk Officer, Department of Education, Office of Management and Budget, 725 17th Street, NW., Room 10235, New Executive Office Building, Washington, DC 20503 or should be electronically mailed to the internet address Lauren_Wittenberg@omb.eop.gov.

FOR FURTHER INFORMATION CONTACT: Section 3506 of the Paperwork Reduction Act of 1995 (44 U.S.C. Chapter 35) requires that the Office of Management and Budget (OMB) provide interested Federal agencies and the public an early opportunity to comment on information collection requests. OMB may amend or waive the requirement for public consultation to the extent that public participation in the approval process would defeat the purpose of the information collection, violate State or Federal law, or substantially interfere with any agency's ability to perform its statutory obligations. The Leader, Regulatory Information Management Group, Office of the Chief Information Officer, publishes that notice containing proposed information collection requests prior to submission of these requests to OMB. Each proposed information collection, grouped by office, contains the following: (1) Type of review requested, *e.g.,* new, revision, extension, existing or reinstatement; (2) Title; (3) Summary of the collection; (4) Description of the need for, and proposed use of, the information; (5) Respondents and frequency of collection; and (6) Reporting and/or Recordkeeping burden. OMB invites public comment.

Dated: January 11, 2001.

John Tressler,

Leader, Regulatory Information Management, Office of the Chief Information Officer.

Office of Educational Research and Improvement

Type of Review: Reinstatement.

Title: National Assessment of Adult Literacy.

Frequency: One time.

Affected Public: Businesses or other for-profit.

Reporting and Recordkeeping Hour Burden:

Responses: 956

Burden Hours: 703

Abstract: The 2002 National Adult Assessment of Literacy (NAAL) will assess the current status of the English language skills of adults in the United States, as well as how literacy proficiencies have changed since the 1992 National Adult Literacy Survey (NALS). The sample consists of adults 16 years of age and older who reside in private households at the time of the assessment.

Requests for copies of the proposed information collection request may be accessed from *http://edicsweb.ed.gov,* or should be addressed to Vivian Reese, Department of Education, 400 Maryland Avenue, SW., Room 4050, Regional Office Building 3, Washington, DC 20202–4651. Requests may also be electronically mailed to the internet address OCIO_IMG_Issues@ed.gov or faxed to 202–708–9346. Please specify the complete title of the information collection when making your request. Comments regarding burden and/or the collection activity requirements should be directed to Kathy Axt at her internet address Kathy_Axt@ed.gov. Individuals who use a telecommunications device for the deaf (TDD) may call the Federal Information Relay Service, (FIRS) at 1–800–877–8339.

[FR Doc. 01–1443 Filed 1–17–01; 8:45 am]

BILLING CODE 4000–01–M

DEPARTMENT OF EDUCATION

[CFDA NO. 84.334]

Office of Postsecondary Education; Notice Inviting Applications for New Awards for Fiscal Year 2001—Gaining Early Awareness and Readiness for Undergraduate Programs—GEAR UP

Purpose of Program: The purpose of this program is to increase the number of low-income students who are prepared to enter and succeed in college. Through improved academic preparation and early awareness activities, eligible students are provided comprehensive mentoring, counseling, outreach and supportive services, including information to students and their parents about the benefits of postsecondary education and the availability of Federal financial assistance to attend college. Through the scholarship component, which is mandatory for State grants and recommended for Partnership grants, eligible students may receive scholarships for higher education.

Eligible Applicants: 1. For Partnership grants, eligible applicants include at least—

- One institution of higher education. This may be any degree-granting two-year or four-year college or university;
- One local educational agency (school district) on behalf of one or more schools with a 7th grade and the high school(s) that the students at these middle schools would normally attend. Generally, at least 50 percent of the students attending the participating school with a 7th grade must be eligible for free or reduced-price lunches. However, as an alternative, Partnerships may choose to work with one or more grade levels of students, beginning not later than the 7th grade, who reside in public housing; and
- Two additional organizations, such as businesses, professional associations, community-based organizations, State Agencies, elementary schools, philanthropic organizations, religious groups, and other public or private organizations.

2. For State grants, eligible applicants are State Agencies as designated by the State's Governor, one per State.

Applications Available: January 19, 2001.

Deadline for Transmittal of Applications: March 30, 2001.

Deadline for Intergovernmental Review: May 29, 2001.

Available Funds: Approximately $35,500,000 for Partnership grants and $23,000,000 for State grants. Federal funds shall provide not more than 50 percent of the total cost of any project funded by a grant under this program, except as provided for under 34 CFR 694.7. The non-Federal share of project costs may be in-cash or in-kind, fairly valued, including services, supplies or equipment.

Estimated Average Awards: No minimum, maximum or average award has been established for Partnership grants. The size of each Partnership grant will depend on the number of students served. However, there is a maximum annual Federal contribution of $800 per student for Partnership grants.

State grants have a $2.5 million maximum and no minimum award.

Estimated Number of Awards: Approximately 9–12 State grant awards and approximately 75–90 Partnership grant awards, depending on the size and configuration of each Partnership.

Note: The Department is not bound by any estimates in this notice.

Project Period: Up to 60 months.

Applicable Regulations: (a) The Education Department General Administrative Regulations (EDGAR) in 34 CFR parts 74, 75, 77, 79, 80, 86, 97, 98 and 99. (b) The regulations for this program in 34 CFR part 694.

Authorized Activities: Section 404D, 404E, 404F, and 404G of the Higher Education Act of 1965, as amended. [20 U.S.C. 1070a-24]

Selection Criteria: The Secretary uses the selection criteria in accordance with 34 CFR 75.209 and 75.210 to evaluate applications for Gaining Early Awareness and Readiness for Undergraduate Programs. The application package includes the selection criteria and the points assigned to the criteria.

Page Limits: The application narrative (Part 4 of the application) is limited to the equivalent of no more than 40 pages using the following standards:

- A ''page'' is 8.5″ x 11″, on one side only, with 1″ margins at the top, bottom, and both sides.
- Double space (no more than three lines per vertical inch) all text in the application narrative, including titles, headings, footnotes, quotations, references, and captions, as well as all text in charts, tables, figures, and graphs.
- Use a font that is either 12-point or larger or no smaller than 10 pitch (characters per inch).

The page limit does not apply to Part 1, the cover sheet; Part 2, the Table of Contents; Part 3 the Abstract; or Part 5, the budget section, including the narrative budget justification; the assurances and certifications; or the resumes, the bibliography, or the letters of support. However, you must include all of the application narrative (Part 4) in the page limit. Reviewers will not read any pages of your application that exceed the page limit if you apply these standards or exceed the equivalent of the page limit.

Priorities

Competitive Priorities

Competitive Preference Priority 1

Under 34 CFR 75.105(c)(2)(i) and 34 CFR 694.15(b), the Secretary will give preference to Partnership projects that establish or maintain financial assistance programs that award scholarships to participating students, either in accordance with section 404E of the Higher Education Act of 1965, or in accordance with GEAR UP regulations 34 CFR 694.11. The Secretary will award up to five (5) points in addition to any points the applicant earns under the selection criteria, to applicants who meet this priority, depending on how well the application meets the priority.

Competitive Preference Priority 2

Under 34 CFR 75.105(c)(2)(ii) and 34 CFR 694.15(a), the Secretary gives competitive preference to an application for a Partnership or State grant that serves a substantial number or percentage of students who reside in or attend school in an Empowerment Zone, Supplemental Empowerment Zone, or Enterprise Community, under 34 CFR 75.105(2)(ii) and 34 CFR 694.15(a). This preference means that an applicant meeting this criterion would be placed above another application of comparable merit, and the preference will be used in the selection process as a tie-breaker.

For Applications Contact: Education Publications Center (EDPUBS), P.O. Box 1398, Jessup, Maryland 20794–1398. Telephone (toll free) 1–877–433–7827. Fax: (301) 470–1244. If you use a telecommunications device for the deaf (TDD) you may call toll free 1–877–576–7734. You may also contact EDPUBS at its web site: http://www.ed.gov/pubs/edpubs.html.

Or you may contact EDPUBS at its e-mail address: edpubs@inet.ed.gov.

If you request an application from EDPUBS, be sure to identify this competition as follows: CFDA number 84.334.

FOR FURTHER INFORMATION CONTACT: U.S. Department of Education, Office of Postsecondary Education, Gaining Early Awareness and Readiness for Undergraduate Programs, 1990 K Street, NW., Room 6252, Washington, DC

20006–8524, telephone 202–502–7676, fax (202) 502–7675, or e-mail gearup@ed.gov

If you use a telecommunications device for the deaf (TDD), you may call the Federal Information Relay Service (FIRS) at 1–800–877–8339.

Individuals with disabilities may obtain this document or a copy of the GEAR UP application package in an alternative format (*e.g.,* Braille, large print, audiotape, or computer diskette) upon request to the contact number listed under **FOR FURTHER INFORMATION CONTACT.** However, the Department is not able to reproduce in an alternative format the standard forms included in the application package.

Electronic Access to This Document

You may view this document, as well as all other Department of Education documents published in the **Federal Register** in text or Adobe Portable Document Format (PDF) on the Internet at either of the following sites:

http://ocfo.ed.gov/fedreg.htm
http://www.ed.gov/new.html

To use PDF you must have Adobe Acrobat Reader, which is available free at either of the previous sites. If you have any questions about using PDF, call the U.S. Government Printing Office (GPO) at (202) 512–1530 or, toll free, at 1–888–293–6498.

Note: The official version of this document is the document published in the **Federal Register**. Free Internet access to the offical edition of the **Federal Register** and the Code of Federal Regulations is available on GPO Access at: *http://www.access.gpo.gov/nara/index.html.*

Program Authority: 20 U.S.C. 1070a–21—20 U.S.C. 1070a–28.

Dated: January 12, 2001.

A. Lee Fritschler,

Assistant Secretary, Office of Postsecondary Education.

[FR Doc. 01–1529 Filed 1–17–01; 8:45 am]

BILLING CODE 4000–01–P

DEPARTMENT OF EDUCATION

[CFDA No.: 84.128G]

Migrant and Seasonal Farmworkers Program; Notice Inviting Applications for New Awards for Fiscal Year (FY) 2001

Purpose of Program: To provide grants for vocational rehabilitation services to individuals with disabilities who are migrant or seasonal farmworkers, as determined in accordance with rules prescribed by the Secretary of Labor, and to the family members who are residing with those individuals (whether or not those family members are individuals with disabilities).

Eligible Applicants: A State designated agency; nonprofit agencies working in collaboration with a State agency; and a local agency working in collaboration with a State agency.

Applications Available: January 30, 2001.

Deadline for Transmittal of Applications: March 30, 2001.

Deadline for Intergovernmental Review: May 30, 2001.

Estimated Available Funds: $528,000.

Estimated Range of Awards: $150,000–$170,000.

Estimated Average Size of Awards: $165,000.

Estimated Number of Awards: 3.

Note: The Department is not bound by any estimates in this notice.

Reasonable Accommodations: We will consider, and may fund, requests for additional funding as an addendum to an application to reflect the costs of reasonable accommodations necessary to allow individuals with disabilities to be employed on the project as personnel on project activities.

Project Period: Up to 60 months.

Applicable Regulations: The Education Department General Administrative Regulations (EDGAR) in 34 CFR parts 74, 75, 77, 79, 80, 81, 82, 85, and 86.

Note: The regulations in 34 CFR part 79 apply to applicants except federally recognized Indian tribes.

Note: The regulations in 34 CFR part 86 apply to institutions of higher education only.

Priority: This competition focuses on projects designed to meet the priority in the notice of final competitive preference for this program, published in the **Federal Register** on November 22, 2000 (65 FR 70408). Under 34 CFR 75.105 (c)(2)(i) the Assistant Secretary adds a competitive preference to applications that are otherwise eligible for funding under this program.

The maximum score under the selection criteria for this program is 100 points; however, we will also use the following competitive preference so that up to an additional 10 points may be earned by an applicant for a total possible score of 110 points.

Up to 10 points may be earned based on the extent to which an application includes effective strategies for employing and advancing in employment qualified individuals with disabilities as project employees in projects awarded under this program. In determining the effectiveness of those strategies, we will consider the applicant's prior success, as described in the application, in employing and advancing in employment qualified individuals with disabilities.

Therefore, within this competitive preference, applicants can be awarded up to a total of 10 points in addition to those awarded under the published selection criteria for this program (The selection criteria to be used for this competition will be provided in the application package for this competition). That is, an applicant meeting this competitive preference could earn a maximum total of 110 points.

Application Procedures:

Note: Some of the procedures in these instructions for transmitting applications differ from those in the Education Department General Administrative Regulations (EDGAR) (34 CFR 75.102). Under the Administrative Procedure Act (5 U.S.C. 553) the Department generally offers interested parties the opportunity to comment on proposed regulations. However, these amendments make procedural changes only and do not establish new substantive policy. Therefore, under 5 U.S.C. 553(b)(A), the Secretary has determined that proposed rulemaking is not required.

Pilot Project for Electronic Submission of Applications

The U.S. Department of Education is expanding its pilot project of electronic submission of applications to include certain formula grant programs, as well as additional discretionary grant competitions. The Migrant and Seasonal Farmworkers Program (CFDA 84.128G) is one of the programs included in the pilot project. If you are an applicant under the Migrant and Seasonal Farmworkers Program, you may submit your application to us in either electronic or paper format.

The pilot project involves the use of the Electronic Grant Application System (e-APPLICATION, formerly e-GAPS) portion of the Grant Administration and Payment System (GAPS). We request your participation in this pilot project. We shall continue to evaluate its success and solicit suggestions for improvement.

If you participate in this e-APPLICATION pilot, please note the following:

- Your participation is voluntary.
- You will not receive any additional point value or penalty because you submit a grant application in electronic or paper format.
- You can submit all documents electronically, including the Application for Federal Assistance (ED 424), Budget Information—Non-Construction Programs (ED 524), and all necessary assurances and certifications.

• Fax a signed copy of the Application for Federal Assistance (ED 424) after following these steps:

1. Print ED 424 from the e-APPLICATION system.

2. Make sure that the institution's Authorizing Representative signs this form.

3. Before faxing this form, submit your electronic application via the e-APPLICATION system. You will receive an automatic acknowledgement, which will include a PR/Award number (an identifying number unique to your application).

4. Place the PR/Award number in the upper right hand corner of ED 424.

5. Fax ED 424 to the Application Control Center within three working days of submitting your electronic application. We will indicate a fax number in e-APPLICATION at the time of your submission.

• We may request that you give us original signatures on all other forms at a later date. You may access the electronic grant application for the Migrant and Seasonal Farmworkers Program at: http://e-grants.ed.gov.

We have included additional information about the e-APPLICATION pilot project (see Parity Guidelines between Paper and Electronic Applications) in the application package.

For Applications Contact: Education Publications Center (ED Pubs), P.O. Box 1398, Jessup, MD 20794–1398. Telephone (toll free): 1–877–433–7827. FAX: (301) 470–1244. If you use a telecommunications device for the deaf (TDD), you may call (toll free): 1–877–576–7734.

You may also contact ED Pubs via its Web site: http://www.ed.gov/pubs/edpubs.html.

Or you may contact ED Pubs at its e-mail address: edpubs@inet.ed.gov.

If you request an application from ED Pubs, be sure to identify this competition as follows: CFDA number 84.128G.

Individuals with disabilities may obtain a copy of the application package in an alternative format by contacting the Grants and Contracts Services Team (GCST), U.S. Department of Education, 400 Maryland Avenue, SW., room 3317, Switzer Building, Washington, DC 20202–2550. Telephone: (202) 205–8351. If you use a telecommunications device for the deaf (TDD), you may call the Federal Information Relay Service (FIRS) at 1–800–877–8339. However, the Department is not able to reproduce in an alternative format the standard forms included in the application package.

FOR FURTHER INFORMATION CONTACT: Mary E. Chambers, U.S. Department of Education, 400 Maryland Avenue, SW., room 3322, Switzer Building, Washington, DC 20202–2647. Telephone (202) 205–8435. If you use a telecommunications device for the deaf (TDD), you may call the Federal Information Relay Service (FIRS) at 1–800–877–8339.

Individuals with disabilities may obtain a copy of this document in an alternative format (*e.g.*, Braille, large print, audiotape, or computer diskette) on request to the contact person listed in the preceding paragraph.

Electronic Access to This Document

You may view this document, as well as other Department of Education documents published in the **Federal Register**, in text or Adobe Portable Document Format (PDF) on the Internet at either of the following sites:

http://ocfo.ed.gov/fedreg.htm
http://www.ed.gov/news.html

To use the PDF you must have Adobe Acrobat Reader, which is available free at either of the previous sites. If you have questions about using PDF, call the U.S. Government Printing Office (GPO), toll free, at 1–888–293–6498; or in the Washington, DC, area at (202) 512–1530.

Note: The official version of this document is the document published in the **Federal Register**. Free Internet access to the official edition of the **Federal Register** and the Code of Federal Regulations is available on GPO Access at: http://www.access.gpo.gov/nara/index.html

Program Authority: 29 U.S.C. 774.

Dated: January 12, 2001.

Judith E. Heumann,

Assistant Secretary for Special Education and Rehabilitative Services.

[FR Doc. 01–1528 Filed 1–17–01; 8:45 am]

BILLING CODE 4000–01–P

DEPARTMENT OF EDUCATION

Recognition of Accrediting Agencies, State Agencies for the Approval of Public Postsecondary Vocational Education, and State Agencies for the Approval of Nurse Education

AGENCY: National Advisory Committee on Institutional Quality and Integrity, Department of Education (The Advisory Committee).

What Is the Purpose of This Notice?

The purpose of this notice is to invite written comments on accrediting agencies whose applications to the Secretary for initial or renewed recognition will be reviewed at the Advisory Committee meeting to be held on May 23–25, 2001. The notice also invites written comments on agencies submitting interim reports that will be reviewed at the May meeting. Further, the notice invites written comments on one Federal agency seeking degree-granting authority.

Where Should I Submit My Comments?

Please submit your written comments by March 5, 2001 to Carol Griffiths, Chief, Accrediting Agency Evaluation, Accreditation and State Liaison. You may contact her at the U.S. Department of Education, 1990 K Street, NW, 7th Floor, Room 7105, Washington, DC 20006–8509, telephone: (202) 219–7011. Individuals who use a telecommunications device for the deaf (TDD) may call the Federal Information Relay Service at 1–800–877–8339.

What Is the Authority for the Advisory Committee?

The National Advisory Committee on Institutional Quality and Integrity is established under Section 114 of the Higher Education Act (HEA), as amended, 20 U.S.C. 1011c. One of the purposes of the Advisory Committee is to advise the Secretary of Education on the recognition of accrediting agencies and State approval agencies.

Will This Be My Only Opportunity To Submit Written Comments?

Yes, this notice announces the only opportunity you will have to submit written comments. However, a subsequent **Federal Register** notice will announce the meeting and invite individuals and/or groups to submit requests to make oral presentations before the Advisory Committee on the agencies that the Committee will review. That notice, however, does not offer a second opportunity to submit written comment.

What Happens to the Comments That I Submit?

We will review your comments, in response to this notice, as part of our evaluation of the agencies' compliance with the Secretary's Criteria for Recognition of Accrediting Agencies. The Criteria are regulations found in 34 CFR part 602 (for accrediting agencies) and in 34 CFR part 603 (for State approval agencies).

We will also respond to your comments, as appropriate, in the staff analyses we present to the Advisory Committee at its May 2001 meeting. Therefore, in order for us to give full consideration to your comments, it is important that we receive them by March 5, 2001. In all instances, your comments about agencies seeking initial

or continued recognition must relate to the Criteria for the Recognition. In addition, your comments for any agency whose interim report is scheduled for review must relate to the issues raised and the Criteria for Recognition cited in the Secretary's letter that requested the interim report. You may obtain a copy of the Secretary's letter by calling (202) 219–7011.

What Happens to Comments Received After the Deadline?

We will treat any negative comments received after the deadline as complaints. If such comments, upon investigation, reveal that the accrediting agency is not acting in accordance with the Criteria for Recognition, we will take action either before or after the meeting, as appropriate. We will also notify the commentors of the disposition of those comments.

What Agencies Are on the Agenda for the Meeting?

The Secretary of Education recognizes accrediting agencies and State approval agencies for public postsecondary vocational education and nurse education if the Secretary determines that they meet the Criteria for Recognition. Recognition means that the Secretary considers the agency to be a reliable authority as to the quality of education offered by institutions or programs that are encompassed within the scope of recognition he grants to the agency. The following agencies will be reviewed during the May 2001 meeting of the Advisory Committee:

Nationally Recognized Accrediting Agencies

Petition for Initial Recognition

1. Teacher Education Accreditation Council (Requested scope of recognition: The accreditation of professional education programs in institutions offering baccalaureate and graduate degrees for the preparation of teachers and other professional personnel for elementary and secondary schools).

Petitions for Renewal of Recognition

1. Accrediting Council for Independent Colleges and Schools (Requested scope of recognition: The accreditation of private postsecondary institutions offering business and business-related programs and the accreditation and preaccreditation (''Recognized Candidate'') of junior and senior colleges of business (including senior colleges with master's degree programs), as well as independent, freestanding institutions offering only graduate business and business-related programs at the master's degree level).

2. American College of Nurse-Midwives, Division of Accreditation (Current scope of recognition: The accreditation and preaccreditation (''Preaccreditation'') of basic certificate and graduate nurse-midwifery education programs for registered nurses, as well as the accreditation and preaccreditation of pre-certification nurse-midwifery education programs) (Requested scope of recognition: The current scope of recognition plus the accreditation of midwifery education programs for non-nurses at the post-baccalaureate or higher academic level that lead to certificates or graduate degrees).

3. American Council on Pharmaceutical Education (Requested scope of recognition: The accreditation and preaccreditation (''Precandidate'' and ''Candidate'') of professional degree programs in pharmacy leading to the degrees of Baccalaureate in Pharmacy and Doctor of Pharmacy).

4. Association for Clinical Pastoral Education, Inc., Accreditation Commission (Requested scope of recognition: The accreditation of clinical pastoral education (CPE) centers and CPE and supervisory CPE programs).

5. American Dental Association, Commission on Dental Accreditation (Requested scope of recognition: The accreditation of predoctoral dental education programs (programs leading to the D.D.S. or D.M.D. degree); dental auxiliary education programs (dental assisting, dental hygiene and dental laboratory technology); and advanced dental educational programs (general practices residency, advanced general dentistry, and the specialties of dental public health, endodontics, oral pathology, orthodontics, oral and maxillofacial surgery, pedodontics, periodontics, and prosthodontics)).

6. American Occupational Therapy Association, Accreditation Council for Occupational Therapy Education (Current scope of recognition: The accreditation of entry-level professional occupational therapy educational programs awarding baccalaureate degrees, post-baccalaureate certificates, professional master's degrees, and combined baccalaureate/master's degrees, and also for the accreditation of occupational therapy assistant programs leading to an associate degree or certificate) (Requested scope of recognition: The current scope of recognition plus the accreditation of entry-level doctoral degree professional occupational therapy educational programs and the accreditation of programs offered principally through distance education).

7. Council on Chiropractic Education, Commission on Accreditation (Requested scope of recognition: The accreditation of Doctor of Chiropractic programs and single-purpose institutions offering the Doctor of Chiropractic program).

8. Commission on Opticianry Accreditation (Requested scope of recognition: The accreditation of two-year programs for the ophthalmic dispenser and one-year programs for the ophthalmic laboratory technician).

9. Joint Review Committee on Education in Radiologic Technology (Requested scope of recognition: The accreditation of educational programs for radiographers and radiation therapists).

10. Joint Review Committee on Educational Programs in Nuclear Medicine Technology (Requested scope of recognition: The accreditation of higher education programs for the nuclear medicine technologist).

11. Southern Association of Colleges and Schools, Commission on Colleges (Requested scope of recognition: The accreditation and preaccreditation (''Candidate for Accreditation'') of degree-granting institutions of higher education in Alabama, Florida, Georgia, Kentucky, Louisiana, Mississippi, North Carolina, South Carolina, Tennessee, Texas, and Virginia).

12. Western Association of Schools and Colleges, Accrediting Commission for Senior Colleges and Universities (Requested scope of recognition: The accreditation and preaccreditation (''Candidate for Accreditation'') of senior colleges and universities in California, Hawaii, the United States territories of Guam and American Samoa, the Republic of Palau, the Federated States of Micronesia, the Commonwealth of the Northern Marianna Islands, and the Republic of the Marshall Islands).

Interim Reports (An interim report is a follow-up report on an accrediting agency's compliance with specific criteria for recognition that was requested by the Secretary when the Secretary granted renewed recognition to the agency.)

1. American Physical Therapy Association, Commission on Accreditation in Physical Therapy Education.

2. American Psychological Association, Committee on Accreditation.

3. Commission on Collegiate Nursing Education.

4. National Accrediting Commission of Cosmetology Arts and Sciences.

5. National Association of Nurse Practitioners in Women's Health, Council on Accreditation.

6. Transnational Association of Christian Colleges and Schools, Accreditation Commission.

State Agencies Recognized for the Approval of Public Postsecondary Vocational Education

Interim Report

1. Kansas Board of Regents.

Federal Agency Seeking Degree-Granting Authority

In accordance with the Federal policy governing the granting of academic degrees by Federal agencies (approved by a letter from the Director, Bureau of the Budget, to the Secretary, Health, Education, and Welfare, dated December 23, 1954), the Secretary is required to establish a review committee to advise the Secretary concerning any legislation that may be proposed that would authorize the granting of degrees by a Federal agency. The review committee forwards its recommendation concerning a Federal agency's proposed degree-granting authority to the Secretary, who then forwards the committee's recommendation and the Secretary's recommendation to the Office of Management and Budget for review and transmittal to the Congress. The Secretary uses the Advisory Committee as the review committee required for this purpose. Accordingly, the Advisory Committee will review the following institution at this meeting:

Proposed Master's Degree-Granting Authority

1. U.S. Marine Corps University, Quantico, VA (request to award a master's degree in Strategic Studies).

Where Can I Inspect Petitions and Third-Party Comments Before and After the Meeting?

Subject to the provisions of 5 U.S.C. 522, petitions, interim reports, and those third-party comments received in advance of the meeting, will, upon written request, be made available, on appointment, for inspection and copying at the U.S. Department of Education, 1990 K Street, NW., 7th Floor, Room 7105, Washington, DC 20006–8509, telephone (202) 219–7011 until May 4, 2001. They will be available again after the May 23–25 Advisory Committee meeting.

Authority: 5 U.S.C. Appendix 2.

Dated: January 11, 2001.

A. Lee Fritschler,

Assistant Secretary for Postsecondary Education.

[FR Doc. 01–1473 Filed 1–17–01; 8:45 am]

BILLING CODE 4000–01–P

DEPARTMENT OF ENERGY

Management of Certain Plutonium Residues and Scrub Alloy Stored at the Rocky Flats Environmental Technology Site

AGENCY: U.S. Department of Energy.

ACTION: Amended Record of Decision.

SUMMARY: The Department of Energy (DOE) has decided to revise its approach to managing approximately 315 kg of plutonium fluoride residues (containing approximately 142 kg of plutonium) that currently are stored at the Rocky Flats Environmental Technology Site (Rocky Flats Site). In an earlier Record of Decision (63 FR 66136, December 1, 1998), DOE decided that these plutonium fluoride residues would be shipped to the Savannah River Site (SRS) for processing and storage pending disposition. Due to the opening of the Waste Isolation Pilot Plant (WIPP) in New Mexico on March 26, 1999, and other circumstances, including delays in securing shipping container certification required prior to transporting the plutonium fluoride residues to SRS, DOE has now decided to prepare the plutonium fluoride residues appropriately and ship them to WIPP for disposal. This will help avoid delays in meeting the closure schedule for the Rocky Flats Site.

ADDRESSES: The potential environmental impacts of alternative approaches for management of these residues are analyzed in the Final Environmental Impact Statement on Management of Certain Plutonium Residues and Scrub Alloy Stored at the Rocky Flats Environmental Technology Site (hereinafter referred to as the Residues EIS) (DOE/EIS–0277F, August 1998) and were part of the basis for three prior Records of Decision issued for the plutonium-bearing residues at the Rocky Flats Site. Copies of the Residues EIS; the first and second Records of Decision (63 FR 66136, December 1, 1998, and 64 FR 8068, February 18, 1999, respectively); the first Amended Record of Decision (64 FR 47780, September 1, 1999); and this Amended Record of Decision and the Supplement Analysis (referenced herein) can be accessed from the DOE's NEPA Web site at *http://www.tis.eh.doe.gov/nepa,* under NEPA Analyses, or can be obtained by contacting the Center for Environmental Management Information, P.O. Box 23769, Washington, DC 20026–3769, telephone 1–800–736–3282 (in Washington, DC: 202–863–5084).

For further information concerning the management of plutonium residues and scrub alloy currently stored at the Rocky Flats Site, contact: Dr. W. Eric Huang, Program Manager, Rocky Flats Office (EM–33), Office of Site Closure, Environmental Management, U.S. Department of Energy, 19901 Germantown Road, Germantown, MD 20874, Telephone: 301–903–4630.

For further information concerning DOE's National Environmental Policy Act (NEPA) process, contact: Ms. Carol Borgstrom, Director, Office of NEPA Policy and Compliance (EH–42), U.S. Department of Energy, 1000 Independence Avenue, SW., Washington, DC 20585, Telephone (202) 586–4600, or leave a message at 1–800–472–2756.

SUPPLEMENTARY INFORMATION:

I. Background

In August 1998, DOE issued the Residues EIS that assessed the potential environmental impacts of processing certain plutonium residues and scrub alloy stored at the Rocky Flats Site near Golden, Colorado, in preparation for disposal or other disposition. These materials were produced in conjunction with nuclear weapons activities conducted by DOE during the Cold War and the materials are no longer needed. Currently, DOE is cleaning up and disposing of (where appropriate) such materials. The plutonium residues analyzed in the Residues EIS included approximately 315 kg of plutonium fluoride residues containing approximately 45 percent plutonium by weight (approximately 142 kg of plutonium). In the Residues EIS, the plutonium fluoride residues were included as part of a category called ''wet residues,'' having an average of approximately 7 percent plutonium by weight. (Residues EIS Table 2–1.)

The Residues EIS analyzed three alternative technologies and a no-action alternative for processing plutonium fluoride residues stored at the Rocky Flats Site. The selected alternative for the plutonium fluoride residues in the first Record of Decision in 1998 was the preferred alternative in the Residues EIS, which is Purex processing and storage at SRS pending disposition (italicized below).

• *Alternative 1.* Dissolving the plutonium fluoride residues in acid and precipitating the plutonium with oxalic acid, at the Rocky Flats Site. The

recovered plutonium would be packaged for storage at the Rocky Flats Site. (This is the no-action alternative.)

• *Alternative 2.* Blending down the plutonium fluoride residues at the Rocky Flats Site with an inert material so that each container would meet the safeguards termination limit for plutonium fluorides (0.2 percent plutonium by weight). The blended material would then be packaged into pipe overpack components and subsequently packaged into 55-gallon drums for transportation and disposal at the Waste Isolation Pilot Plant[1] (WIPP).

• *Alternative 3.* Two technologies for separation of plutonium from plutonium fluoride residues were analyzed.

—*Repackaging the plutonium fluoride residues at the Rocky Flats Site for transportation to SRS and separation of the plutonium there using the Purex process. The processed plutonium would be stored at SRS pending disposition as mixed oxide nuclear fuel or disposed of as vitrified high-level waste in a geologic repository.*

—Dissolving the plutonium fluoride residues in acid and precipitating the plutonium with oxalic acid at the Rocky Flats Site (this is the same as the no-action alternative). The recovered plutonium then would be dispositioned as mixed oxide nuclear fuel or disposed of as vitrified high-level waste in a geologic repository.

II. Original Decision

In addition to this amended Record of Decision, DOE has issued two Records of Decision and an earlier amended Record of Decision for the final Residues EIS. The first Record of Decision, issued on November 25, 1998 (63 FR 66136, December 1, 1998), addressed materials from each of the categories of Rocky Flats plutonium residues (*i.e.,* ash, salt, wet, and direct repackage) and scrub alloy. This first Record of Decision (Section VII.D.1) stated that DOE had decided to transport the plutonium fluoride residues to SRS and use the F-Canyon, where the Purex plutonium separation process is located, to separate plutonium (*i.e.,* one of the two sub-alternatives of Alternative 3 in the Residues EIS). The separated plutonium would then have been subject to disposition as mixed oxide fuel or disposed of as vitrified high-level waste pursuant to decisions that DOE made after completion of the Surplus Plutonium Disposition Environmental Impact Statement (DOE/EIS–0283, November 1999; Record of Decision, 65 FR 1608, January 11, 2000).

The first Record of Decision (Section VII.D.2) explained that the Purex plutonium separation process at SRS was selected for the plutonium fluoride residues because it posed less technical risk and would cost less than the establishment of a new acid dissolution/plutonium oxide recovery capability at the Rocky Flats Site (Alternative 1). The Record of Decision further explained that blend down[2] (to meet the safeguards termination limit) (Alternative 2) would result in a very large increase in the amount of transuranic waste requiring disposal, which would increase the cost of disposing of the material.

III. Events Since Issuance of the First Record of Decision

Since issuance of the first Record of Decision in 1998, DOE has been preparing to ship the plutonium fluoride residues to SRS for separation and has not undertaken any activity that would alter the chemical or physical conditions of these residues. Initially, DOE had planned to begin shipment of the plutonium fluoride residues to SRS by January 2000 and to complete these shipments by September 2000. Removal of these materials from the Rocky Flats Site by September 2000 would have supported near-term closure of the Protected Area[3] of the Site and, subsequently, closure of the entire Site by 2006.

Before shipping plutonium fluoride residues to SRS, however, DOE must certify the shipping container for plutonium fluoride residues, and additional testing required before certification would take at least 15 months to complete. Further delay in implementing the earlier decision (*i.e.,* plutonium separation using the Purex process at SRS) would in turn delay closure of the Protected Area and associated buildings, extend decommissioning schedules, and ultimately delay closure of the entire Rocky Flats Site. A delay in the closure of the Rocky Flats Site would be costly due to extended site security needs and site services, eliminating the cost advantages of implementing the earlier decision.

At the time the Residues EIS was being prepared, DOE believed that it was impractical to apply a variance to safeguards termination limits for plutonium fluoride residues due to the high plutonium concentration and the relative ease of recovering the plutonium from the residue matrix. Although the amount of the plutonium fluoride residues was small (315 kg), the amount of plutonium present in these residues (about 142 kg) subjected them at that time to a set of safeguards requirements to maintain control of the residues and to ensure that the plutonium in them was not stolen or diverted for illicit use (*e.g.,* to construct a nuclear weapon). Therefore, the Residues EIS only analyzed the impacts of blending and repackaging the plutonium fluorides to meet the safeguards termination limits for them (0.2 weight percent), and did not analyze an alternative to blend these particular residues down to less than 10 weight percent plutonium.

The Rocky Flats Site has since developed a blending matrix of inert material that would result in a blended material from which plutonium recovery is difficult. This development, in addition to the application of other conditions, has allowed the Rocky Flats Site to obtain a ''variance'' to the safeguards termination limits from DOE's Office of Defense Nuclear Nonproliferation. The other conditions applied include a modification of the packaging components of the pipe overpack container to make it more difficult to divert any plutonium and a re-evaluation of the recovery processing steps required to separate plutonium from the plutonium fluoride residues in their present condition. All these special conditions have made the application of a variance for the plutonium fluoride residues and their shipment to WIPP practical.

WIPP's opening in March 1999 and the issuance of WIPP's hazardous waste permit by the New Mexico Environment Department in November 1999 provided DOE with the option to dispose of a blended-down plutonium fluoride residues matrix at WIPP. Because the plutonium fluoride residues contain hazardous constituents, these residues would be subject to the requirements of WIPP's hazardous waste permit.

IV. Decision

After consideration of the potential environmental impacts identified in the Residues EIS, the new circumstances discussed above, and a Supplement

[1] The Waste Isolation Pilot Plant, located near Carlsbad, New Mexico, is DOE's geologic repository for disposal of defense-related transuranic wastes. Transuranic waste contains alpha-emitting radionuclides with half-lives greater than 20 years in concentrations greater than 100 nanocuries per gram of waste at time of assay.

[2] Blend down is a process in which an inert material is mixed with a plutonium-bearing residue to reduce its plutonium concentration.

[3] The Protected Area is the area at the Rocky Flats Site that is encompassed by physical barriers, subject to access control, surrounding a material access area or area containing special nuclear material.

Analysis (DOE/EIS–0277–SA–1), discussed below, DOE has decided to blend down the plutonium fluoride residues with inert material to less than 10 percent, apply a variance to the safeguards termination limits, and dispose of these residues at WIPP.

V. Basis for the Decision

The delay in obtaining the certification for the shipping container needed to transport the plutonium fluoride residues to SRS could prevent DOE from closing the Rocky Flats Site by 2006. DOE now has the ability to blend down this category of residues to less than 10 weight percent of plutonium and meet the variance requirements for safeguards termination limits. For the reasons described below in Section VI, DOE has concluded that blending the plutonium fluoride residues down to less than 10% plutonium by weight and shipping them to WIPP for disposal would have low impacts, well within those analyzed in the Residues EIS.

DOE's decision complies with Section 309 of the Fiscal Year 2001 Energy and Water Development Appropriations Act (Pub. L. 106–377), which specifies that: ''None of the funds in this Act may be used to dispose of transuranic waste in WIPP which contains concentrations of plutonium in excess of 20 percent by weight for the aggregate of any material category on the date of enactment of this Act, or is generated after such date. For the purposes of this section, the material categories of transuranic waste at the Rocky Flats Environmental Technology Site include: (1) Ash residues, (2) salt residues, (3) wet residues, (4) direct repackage residues, and (5) scrub alloy as referenced in the 'Final Environmental Impact Statement on Management of Certain Plutonium Residues and Scrub Alloy Stored at the Rocky Flats Environmental Technology Site.' '' (Plutonium fluoride residues are part of the ''wet residues'' category, which overall contains approximately 7 percent plutonium by weight.)

Furthermore, disposal of the plutonium fluoride residues at WIPP now provides the least technical risk and most cost-effective approach to the management of plutonium fluoride residues, and supports the Rocky Flats closure schedule of 2006. Therefore, there are no longer cost, waste management, or schedule advantages in shipping the plutonium fluoride residues to SRS for separation.

VI. Prior NEPA Analysis

DOE prepared a Supplement Analysis for the Final Environmental Impact Statement on Management of Certain Plutonium Residues and Scrub Alloy Stored at the Rocky Flats Environmental Technology Site (DOE/EIS–0277–SA–1). This Supplement Analysis was developed to determine whether the activities and impacts associated with blending down the plutonium fluoride residues to less than 10 percent plutonium by weight with a matrix of inert material, applying a safeguard termination limit variance, and disposing of the resulting blend at WIPP were encompassed within previous NEPA reviews or would present any significant new information or circumstances relevant to environmental concerns.

The results of this Supplement Analysis indicated that the activities and potential environmental impacts associated with the new action are encompassed within the activities and impacts analyzed under Alternative 2 (blend down) of the Residues EIS. In addition, the overall impacts for the new action will be very small for both the public and workers and within the levels of impacts considered in the Residues EIS. Worker exposure during the new blend down activities would be reduced to 8 person-rem from 365 person-rem estimated in the Residues EIS. The number of Latent Cancer Fatalities (LCF) for the total worker population would be smaller for the new action (0.003) than for Alternative 2 (0.142). The difference in LCF for the total worker population between Alternative 2 and the new action is a result of two factors. The first is a reduced duration of the blend down operation as blending down to less than 10 weight percent plutonium rather than 0.2 weight percent plutonium will result in a shorter period in which the material is handled. Secondly, enhanced worker shielding will reduce worker exposure during the blend-down activities. Additionally, the new action has fewer drums for transportation reducing the potential for traffic accidents during transportation of plutonium fluoride residues to WIPP. Accordingly, DOE determined that carrying out the new action would not constitute a substantial change in actions previously analyzed and would not constitute significant new circumstances or information relevant to environmental concerns and bearing on the previously analyzed action or its impacts. Therefore, DOE did not need to undertake additional NEPA analysis before issuing this amendment to the 1998 Record of Decision.

VII. Conclusion

This Amended Record of Decision is effective upon being made public, in accordance with DOE's NEPA implementation regulations (10 CFR 1021.315).

Issued in Washington, D.C., this 11th day of January 2001.

Carolyn L. Huntoon,

Assistant Secretary for Environmental Management.

[FR Doc. 01–1478 Filed 1–17–01; 8:45 am]

BILLING CODE 6450–01–P

DEPARTMENT OF ENERGY

Environmental Management Site-Specific Advisory Board, Rocky Flats

AGENCY: Department of Energy.

ACTION: Notice of open meeting.

SUMMARY: This notice announces a meeting of the Environmental Management Site-Specific Advisory Board (EM SSAB), Rocky Flats. The Federal Advisory Committee Act (Pub. L. 92–463, 86 Stat. 770) requires that public notice of these meetings be announced in the **Federal Register.**

DATES: Thursday, February 1, 2001, 6 p.m. to 9:30 p.m.

ADDRESSES: Arvada Center for the Arts and Humanities, 6901 Wadsworth Boulevard, Arvada, CO.

FOR FURTHER INFORMATION CONTACT: Ken Korkia, Board/Staff Coordinator, Rocky Flats Citizens Advisory Board, 9035 North Wadsworth Parkway, Suite 2250, Westminster, CO, 80021; telephone (303) 420–7855; fax (303) 420–7579.

SUPPLEMENTARY INFORMATION:

Purpose of the Board: The purpose of the Board is to make recommendations to DOE and its regulators in the areas of environmental restoration, waste management, and related activities.

Tentative Agenda:

1. Quarterly update by the Environmental Protection Agency.
2. Presentation and discussion on recent worker contamination and safety violations at the site.
3. Draft recommendations on Radionuclide Soil Action Level review process.
4. Other Board business may be conducted as necessary.

Public Participation: The meeting is open to the public. Written statements may be filed with the Board either before or after the meeting. Individuals who wish to make oral statements pertaining to agenda items should contact Ken Korkia at the address or telephone number listed above. Requests must be received at least five days prior to the meeting and reasonable provisions will be made to include the presentation in the agenda. The Deputy

Designated Federal Officer is empowered to conduct the meeting in a fashion that will facilitate the orderly conduct of business. Each individual wishing to make public comment will be provided a maximum of five minutes to present their comments.

Minutes: The minutes of this meeting will be available for public review and copying at the Public Reading Room located at the Office of the Rocky Flats Citizens Advisory Board, 9035 North Wadsworth Parkway, Suite 2250, Westminister, CO 80021; telephone (303)420–7855. Hours of operations for the Public Reading Room are 9 a.m. to 4 p.m., Monday–Friday, except Federal holidays. Minutes will also be made available by writing or calling Deb Thompson at the address or telephone number listed above.

Issued at Washington, DC on January 12, 2001.

Rachel M. Samuel,

Deputy Advisory Committee Management Officer.

[FR Doc. 01–1480 Filed 1–17–01; 8:45 am]

BILLING CODE 6450–01–P

DEPARTMENT OF ENERGY

Environmental Management Site-Specific Advisory Board, Semi-Annual Chairs Meeting

AGENCY: Department of Energy.

ACTION: Notice of open meeting.

SUMMARY: This notice announces a meeting of the Environmental Management Site-Specific Advisory Board (EM SSAB), Semi-Annual Chairs Meeting. The Federal Advisory Committee Act (Pub. L. 92–463, 86 Stat. 770) requires that public notice of these meetings be announced in the **Federal Register**.

DATES: Thursday, February 8, 2001, 6:45 a.m.–5:30 p.m.
Friday, February 9, 2001, 8 a.m.–5:30 p.m.
Saturday, February 10, 2001 8 a.m.–1:30 p.m.

ADDRESSES: St. Tropez All Suite Hotel, 455 East Harmon Avenue, Las Vegas, Nevada 89101, Phone: (702) 369–5400 or (800) 666–5400.

FOR FURTHER INFORMATION CONTACT: Martha Crosland, Designated Federal Officer, U.S. Department of Energy, 1000 Independence Avenue, SW., Washington, DC 20585, (202) 586–5793.

SUPPLEMENTARY INFORMATION:

Purpose of the Board: The purpose of the Board is to make recommendations to DOE and its regulators in the areas of future use, cleanup levels, waste disposition, and cleanup priorities.

Tentative Agenda

Thursday, February 8, 2001: EM SSAB Chairs Meeting (Day 1)

6:45 a.m.–5:30 p.m, Joint tour of the Nevada Test Site and Yucca Mountain
6:00 p.m.–7:00 p.m., Opening reception at the St. Tropez Hotel

Friday, February 9, 2001: EM SSAB Chairs Meeting (Day 2)

6:30–8:00 a.m., Continental Breakfast buffet in Truffles Lounge
8:00–8:20 a.m., Opening/Welcoming Remarks/Overview of Agenda (Martha Crosland, DOE/HQ; Carl Gertz, DOE/NV AMEM; etc.)
8:20–8:25 a.m., Introduction of Facilitators and Review of Ground Rules (Ted McAdam, *et.al.*)
8:25–9:30 a.m., Round Robin Ice Breaker. SSAB Chairs will introduce participants from their Boards and briefly list their Boards' Top Three Issues of Concern
9:30–9:40 a.m., Overview of Survey Results and Objectives of Topic-Specific Round Robins and Facilitated Discussions
9:40–10:30 a.m., Topic #1 Round Robin (five minutes for each SSAB). What is your Board's desired composition and how are new members recruited and selected? How effective is that process?
10:30–10:45 a.m., Morning break
10:45–11:25 a.m., Topic #1 Facilitated Discussion
11:25 a.m.–12:05 p.m., Topic #2 Round Robin (four minutes for each SSAB). How does your Board develop its annual work plan? How does your Board set its agenda?
12:05–12:40 p.m., Topic #2 Facilitated Discussion
12:40–1:45 p.m., Buffet lunch served in the hotel
1:45–2:25 p.m., Topic #3 Round Robin (four minutes for each SSAB). How are your Boards's committees structured? How do your Board's committees function? Do non-members participate in committee work?
2:25–3:00 p.m., Topic #3 Facilitated Discussion
3:00–3:15 p.m., Afternoon Break
3:15–3:55 p.m., Topic #4 Round Robin (four minutes for each SSAB). How does your Board develop its recommendations/advice? To whom are your recommendations addressed?
3:55–4:30 p.m., Topic #4 Facilitated Discussion
4:30–5:15 p.m., Review and Approval of Stewardship Core Value Statements
5:15–5:30 p.m., Public Comment
5:30–7:00 p.m., Free time
7:00 p.m. Dine Around Las Vegas. Groups depart for area restaurants—transportation to be provided

Saturday, February 10, 2001: EM SSAB Chairs Meeting (Day 3)

6:30–8:00 a.m., Continental Breakfast Buffet in Truffles Lounge
8:00–8:10 a.m., Welcome and Recap of Previous Day's Work (Martha Crosland or Ted McAdam)
8:10–8:50 a.m., Topic #5 Round Robin (five minutes for each SSAB). How does your Board conduct public outreach and how effective is that effort?
8:50–9:25 a.m., Topic #5 Facilitated Discussion
9:35–10:15 a.m., Topic #6 Round Robin (five minutes for each SSAB). How does your Board conduct self-evaluations, who else evaluates the Board's performance, and how effective is/are that/those process(es)?
10:15–10:55 a.m., Topic #6 Facilitated Discussion
10:55–11:10 a.m., Morning break
11:10a.m.–12:10 p.m., Facilitated Discussion of Issues of Concern to Each Site. Issues discussed will be based on those recorded during the Friday morning Ice Breaker Round Robin discussion.
12:10–12:30 p.m., Updates from DOE Headquarters
- Revised DOE Public Participation Policy Public Review & Comment
- Status Report Regarding Changes at DOE Under the New Administration (Betty Nolan)

12:30–12:45 p.m., Critique of the SSAB Chairs Meeting
12:45–1:00 p.m., Future SSAB Meetings and Workshops—Martha Crosland
1:00–1:15 p.m., Public comment
1:15–1:30 p.m., Closing remarks
1:30 p.m., Adjourn

(Agenda topics may change up to the day of the meetings: please contact Martha Crosland, Designated Federal Officer, (202) 586–5793 for the current agenda.

Public Participation: The meeting is open to the public. Written statements may be filed with the Board facilitator either before or after the meeting. Individuals who wish to make oral statements pertaining to agenda items should contact the Board Chair at their specific site, or Martha Crosland. Requests must be received five days prior to the meeting and reasonable provision will be made to include the presentation in the agenda. The Designated Federal Officer, Martha Crosland, U.S. Department of Energy, is empowered to conduct the meeting in a

fashion that will facilitate the orderly conduct of business. Each individual wishing to make public comment will be provided a maximum of five minutes to present their comments.

Minutes: A written summary of this meeting will be available for public review and copying at the Freedom of Information Public Reading Room, 1E–190, Forrestal Building, 1000 Independence Avenue, SW, Washington, DC, 20585 between 9 a.m. and 4 p.m., Monday–Friday, except Federal holidays. The meeting summary will also be available by writing the EM–SSAB Chair or Designated Deputy Federal Officer of every EM–SSAB that participated in the meeting.

Issued at Washington, DC on January 11, 2001.

Rachel Samuel,

Deputy Advisory Committee Management Officer.

[FR Doc. 01–1481 Filed 1–17–01; 8:45 am]

BILLING CODE 6450–01–P

DEPARTMENT OF ENERGY

[FE Docket No. 00–53–NG, et al.]

Office of Fossil Energy; Chinook Pipeline Company (The Successor to Xeno, Inc.), et al.; Orders Granting and Transferring Authority To Import and Export Natural Gas

AGENCY: Office of Fossil Energy, DOE.

ACTION: Notice of orders.

SUMMARY: The Office of Fossil Energy (FE) of the Department of Energy gives notice that during December 2000, it issued Orders granting and transferring authority to import and export natural gas. These Orders are summarized in the attached appendix and may be found on the FE website at http://www.fe.doe.gov, or on the electronic bulletin board at (202) 586–7853. They are also available for inspection and copying in the Office of Natural Gas & Petroleum Import & Export Activities, Docket Room 3E–033, Forrestal Building, 1000 Independence Avenue, S.W., Washington, D.C. 20585, (202) 586–9478. The docket room is open between the hours of 8 a.m. and 4:30 p.m., Monday through Friday, except Federal holidays.

Issued in Washington, D.C., on January 9, 2001.

Clifford P. Tomaszewski,

Manager, Natural Gas Regulation, Office of Natural Gas & Petroleum, Import & Export Activities, Office of Fossil Energy.

Attachment.

APPENDIX.—ORDERS GRANTING AND TRANSFERRING IMPORT/EXPORT AUTHORIZATIONS

[DOE/FE Authority]

Order No.	Date Issued	Importer/Exporter FE Docket No.	Import volume	Export volume	Comments
1615–A	12/04/00	Chinook Pipeline Company (The Successor to Xeno, Inc.) 00–53–NG.			Transfer of blanket export authority.
992–A	12/08/00	Engage Energy Canada, L.P. (The Successor to Westcoast Gas Services Inc.) 94–74–NG.			Transfer of long-term import authority.
993–A	12/08/00	Engage Energy Canada, L.P. (The Successor to Westcoast Gas Services Inc.) 94–75–NG.			Transfer of long-term import authority.
994–A	12/08/00	Engage Energy Canada, L.P. (The Successor to Westcoast Gas Services Inc.) 94–76–NG.			Transfer of long-term import authority.
996–A	12/08/00	Engage Energy Canada, L.P. (The Successor to Westcoast Gas Services Inc.) 94–78–NG.			Transfer of long-term import authority.
1656	12/08/00	Pemex Gas Y Petroquimica Basica 00–93–NG.	(1)160 Bcf		Import and export a combined total to and from Canada and Mexico, beginning on January 1, 2001, and extending through December 31, 2002.
1657	12/08/00	Hunt Oil Company of Canada, Inc. 00–95–NG.	6 Bcf		Import from Canada beginning on December 1, 2000, and extending through November 30, 2002.
1658	12/15/00	Engage Energy Canada, L.P. 00–96–NG.	1,000 Bcf	1,000 Bcf	Import from Canada, including LNG and export to Canada, beginning on January 1, 2001, and extending through December 31, 2002.
1659	12/18/00	The Montana Power Company 00–94–NG.	20 Bcf		Import from Canada beginning on February 7, 2001, and extending through February 6, 2003.
1660	12/21/00	Coast Energy Group, A Division of Cornerstone Propane L.P. 00–99–NG.	40 Bcf		Import and export a combined total to and from Canada and Mexico, beginning on January 1, 2001, and extending through December 31, 2002.
1661	12/22/00	Sprague Energy Corp. 00–98–NG	50 Bcf		Import from Canada beginning on January 1, 2001, and extending through December 31, 2002.
1662	12/26/00	Wisconsin Gas Company 00–97–NG.	200 Bcf		Import from Canada beginning on January 1, 2001, and extending through December 31, 2002.

APPENDIX.—ORDERS GRANTING AND TRANSFERRING IMPORT/EXPORT AUTHORIZATIONS—Continued

[DOE/FE Authority]

Order No.	Date Issued	Importer/Exporter FE Docket No.	Import volume	Export volume	Comments
1663	12/27/00	IDACORP Energy Solutions L.P. 00–100–NG.	730 Bcf		Import and export a combined total to and from Canada, beginning on December 20, 2000, and extending through December 19, 2002.

[FR Doc. 01–1479 Filed 1–17–01; 8:45 am]

BILLING CODE 6450–01–P

DEPARTMENT OF ENERGY

Federal Energy Regulatory Commission

[Docket No. RP01–208–000]

Amoco Production Company, et al.; Notice of Emergency Petition

DATE: January 11, 2001.

Take notice that on January 5, 2001, Amoco Production Company, BP Exploration & Oil Inc., Chevron U.S.A. Inc., ExxonMobil Gas Marketing Company, a division of Exxon Mobil Corporation, and Shell Offshore Inc. (Producers) tendered for filing an emergency petition requesting the Commission to issue an immediate temporary restraining order, prior to January 9, 2001, to prevent Southern Natural Gas Company from shutting in natural gas supply upstream of the Toca processing plants, located in Louisiana. In addition, the Producers request the Commission to schedule an emergency technical conference to explore all of the issues as soon as possible.

Producers states that copies of the filing have been served upon each person designated on the official service list compiled by the Secretary in this proceeding.

Any person desiring to be heard or to protest said filing should file a motion to intervene or a protest with the Federal Energy Regulatory Commission, 888 First Street, NE., Washington, DC 20426, in accordance with sections 385.214 or 385.211 of the Commission's Rules and Regulations. All such motions or protests must be filed on or before January 16, 2001. Protests will be considered by the Commission in determining the appropriate action to be taken, but will not serve to make protestants parties to the proceedings. Any person wishing to become a party must file a motion to intervene. Copies of this filing are on file with the Commission and are available for public inspection in the Public Reference Room. This filing may be viewed on the web at http://www.ferc.fed.us/online/rims.htm (call 202–208–2222 for assistance). Comments and protests may be filed electronically via the internet in lieu of paper. See, 18 CFR 385.2001(a)(1)(iii) and the instructions on the Commission's web site at *http://www.ferc.fed.us/efi/doorbell.htm.*

David P. Boergers,

Secretary.

[FR Doc. 01–1424 Filed 1–17–01; 8:45 am]

BILLING CODE 6717–01–M

DEPARTMENT OF ENERGY

Federal Energy Regulatory Commission

[Docket No. RP01–46–002]

Carnegie Interstate Pipeline Company; Notice of Compliance Filing

January 11, 2001.

Take notice that on January 8, 2001, Carnegie Interstate Pipeline Company (CIPCO), tendered for filing as part of its FERC Gas Tariff, Original Volume No. 1, the following revised tariff sheets, with an effective date of November 1, 2000:

Substitute first Revised Tariff Sheet No. 116

CIPCO states that this tendered sheet is filed in compliance with Order No. 587–L, issued in Docket No. RM96–1–014 by the Commission on June 30, 2000 and implements 18 CFR 284.(c)(ii), regarding the netting and trading of imbalances on CIPCO's system, and further responds to the Commission's directive in its Order of December 21, 2000, herein.

CIPCO states that a copy of the filing is being served on each of CIPCO's jurisdictional customers and interested state commissions.

Any person desiring to protest said filing should file a protest with the Federal Energy Regulatory Commission, 888 First Street, NE., Washington, DC 20426, in accordance with Section 385.211 of the Commission's Rules and Regulations. All such protests must be filed in accordance with Section 154.210 of the Commission's Regulations. Protests will be considered by the Commission in determining the appropriate action to be taken, but will not serve to make protestants parties to the proceedings. Copies of this filing are on file with the Commission and are available for public inspection in the Public Reference Room. This filing may be viewed on the web at http://www.ferc.fed.us/online/rims.htm (call 202–208–222 for assistance). Comments and protests may be filed electronically via the internet in lieu of paper. See, 18 CFR 385.2001(a)(1)(iii) and the instructions on the Commission's web site at http://www.ferc.fed.us/efi/doorbell.htm.

David P. Boergers,

Secretary.

[FR Doc. 01–1422 Filed 1–17–01; 8:45 am]

BILLING CODE 6717–01–M

DEPARTMENT OF ENERGY

Federal Energy Regulatory Commission

[Docket No. ER00–3661–001]

Central Hudson Gas & Electric; Notice of Filing

January 11, 2001.

Take notice that on December 11, 2000, Central Hudson Gas and Electric Corporation (Central Hudson), tendered for filing its FERC Rate Schedule No. 201 which sets forth the terms and charges for transmission facilities provided by the Company to Consolidated Edison company of New York, Inc., and Niagara Mohawk Power Corporation for the transmission of output from the Roseton Generating Station.

Rate Schedule FERC No. 201 is issued in compliance with the October 10, 2000 order issued in Docket No. ER00–3661–000, which required the Company to file rate schedule designations as required in Order No. 614. Accordingly, Rate Schedule FERC No. 201 supersede Rate Schedule FERC No. 42.

Central Hudson states that a copy of its filing was served on Con Edison, Niagara Mohawk and the State of New York Public Service Commission.

Any person desiring to be heard or to protest such filing should file a motion to intervene or protest with the Federal Energy Regulatory Commission, 888 First Street, NE., Washington, DC 20426, in accordance with rules 211 and 214 of the Commission's Rules of Practice and Procedure (18 CFR 385.211 and 385.214). All such motions and protests should be filed on or before January 22, 2001. Protests will be considered by the Commission to determine the appropriate action to be taken, but will not serve to make protestants parties to the proceedings. Any person wishing to become a party must file a motion to intervene. Copies of this filing are on file with the Commission and are available for public inspection. This filing may also be viewed on the Internet at http://www.ferc.fed.us/online/rims.htm (call 202–208–2222 for assistance). Comments and protests may be filed electronically via the internet in lieu of paper. See, 18 CFR 385.2001(a)(1)(iii) and the instructions on the Commission's web site at http://www.ferc.fed.us/efi/doorbell.htm.

David P. Boergers,

Secretary.

[FR Doc. 01–1417 Filed 1–17–01; 8:45 am]

BILLING CODE 6717–01–M

DEPARTMENT OF ENERGY

Federal Energy Regulatory Commission

[Docket No. RP01–37–002]

Equitrans, L.P.; Notice of Compliance Filing

January 11, 2001.

Take notice that on January 8, 2001, Equitrans, L.P. (Equitrans), tendered for filing as part of its FERC Gas Tariff, Original Volume No. 1, the following revised tariff sheet, with an effective date of November 1, 2000:

Substitute Original Sheet No. 255

Equitrans states that this tendered sheet is filed in compliance with Order No. 587–L, issued in Docket No. RM96–1–014 by the Commission on June 30, 2000 and implements 18 CFR 284.(c)(ii), regarding the netting and trading of imbalances on Equitrans' system, and further responds to the Commission's directive in its Order of December 21, 2000, herein.

Equitrans states that a copy of the filing is being served on each of Equitrans' jurisdictional customers and interested state commissions.

Any person desiring to protest said filing should file a protest with the Federal Energy Regulatory Commission, 888 First Street, NE., Washington, DC 20426, in accordance with section 385.211 of the Commission's Rules and Regulations. All such protests must be filed in accordance with section 154.210 of the Commission's Regulations. Protests will be considered by the Commission in determining the appropriate action to be taken, but will not serve to make protestants parties to the proceedings. Copies of this filing are on file with the Commission and are available for public inspection in the Public Reference Room. This filing may be viewed on the web at http://www.ferc.fed.us/online/rims.htm (call 202–208–2222 for assistance). Comments and protests may be filed electronically via the internet in lieu of paper. See, 18 CFR 385.2001(a)(1)(iii) and the instructions on the Commission's web site at http://www.ferc.fed.us/efi/doorbell.htm.

David P. Boergers,

Secretary.

[FR Doc. 01–1423 Filed 1–17–01; 8:45 am]

BILLING CODE 6717–01–M

DEPARTMENT OF ENERGY

Federal Energy Regulatory Commission

Notice of Application for Amendment of License and Soliciting Comments, Motions To Intervene, and Protests

January 11, 2001.

a. *Application Type:* Application to Amend License for the Big Creek Nos. 2A, 8 & Eastwood Power Station Project.

b. *Project No:* 67–089.

c. *Date Filed:* January 12, 2000, and supplemented on November 9, 2000.

d. *Applicant:* Southern California Edison Company (SCE).

e. *Name of Project:* Big Creek Nos. 2A, 8 & Eastwood Power Station Project.

f. *Location:* The project is located on the South Fork San Joaquin River and Big Creek in Fresno County, California. The project utilizes lands of the Sierra National Forest.

g. *Filed Pursuant to:* Federal Power Act, 16 U.S.C. 791(a)–825(r).

h. *Applicant Contact:* Mr. Stephen E. Pickett, Vice President and General Counsel, Southern California Edison Company, 2244 Walnut Grove Avenue, P.O. Box 800, Rosemead, CA 91770, (626) 302–4459.

i. *FERC Contact:* Any questions on this notice should be addressed to Mr. Vedula Sarma at (202) 219–3273 or by e-mail at vedula.sarma@ferc.fed.us.

j. *Deadline for filing comments and/or motions:* February 16, 2001.

All documents (original and eight copies) should be filed with: David P. Boergers, Secretary, Federal Energy Regulatory Commission, 888 First Street, NE., Washington, DC 20426. Comments and protests may be filed electronically via the internet in lieu of paper. See, 18 CFR 385.2001(a)(1)(iii) and the instructions on the Commission's web site at http://www.ferc.fed.us/efi/doorbell.htm.

Please include the project number (P–67–089) on any comments or motions filed.

k. *Description of Filing:* SCE proposes to remove 1.7 miles of transmission line from Big Creek #2A–Big Creek #8, and 5.6 miles of transmission line from Big Creek #8–Big Creek #3 from the project's license since they are part of the SCE's Transmission System Network. SCE also proposes to revise the project boundary by removing a telephone line, caretaker building, warehouse, microwave tower, and other miscellaneous project features because they are no longer used for project purposes. The proposed modifications would reduce the amount of federal lands used by the project by 158.4 acres.

l. *Locations of the Application:* A copy of the application is available for inspection and reproduction at the Commission's Public Reference Room, located at 888 First Street, NE, Room 2A, Washington, DC 20426, or by calling (202) 208–1371. This filing may be viewed on http://www.ferc.fed.us/online/rims.htm [call (202) 208–2222 for assistance]. A copy is also available for inspection and reproduction at the address in item h above.

m. Individuals desiring to be included on the Commission's mailing list should so indicate by writing to the Secretary of the Commission.

Comments, Protests, or Motions to Intervene—Anyone may submit comments, a protest, or a motion to intervene in accordance with the requirements of Rules of Practice and Procedure, 18 CFR 385.210, .211, .214. In determining the appropriate action to take, the Commission will consider all protests or other comments filed, but only those who file a motion to intervene in accordance with the Commission's Rules may become a party to the proceeding. Any comments, protests, or motions to intervene must be received on or before the specified comment date for the particular application.

Filing and Service of Responsive Documents—Any filings must bear in all capital letters the titles ''COMMENTS'', ''RECOMMENDATIONS FOR TERMS AND CONDITIONS'', ''PROTEST'', OR

''MOTION TO INTERVENE'', as applicable, and the Project Number of the particular application to which the filing refers. Any of the above-named documents must be filed by providing the original and the number of copies provided by the Commission's regulation to: The Secretary, Federal Energy Regulatory Commission, 888 First Street, NE., Washington, DC 20426. A copy of any motion to intervene must also be served upon each representative of the Applicant specified in the particular application.

Agency Comments—Federal, state, and local agencies are invited to file comments on the described application. A copy of the application may be obtained by agencies directly from the Applicant. If an agency does not file comments within the time specified for filing comments, it will be presumed to have no comments. One copy of an agency's comments must also be sent to the Applicant's representatives.

David P. Boergers,

Secretary.

[FR Doc. 01–1425 Filed 1–17–01; 8:45 am]

BILLING CODE 6717–01–M

DEPARTMENT OF ENERGY

Federal Energy Regulatory Commission

[Docket No. RP96–312–038]

Tennessee Gas Pipeline Company; Notice of a Change in Rates

January 11, 2001.

Take notice that on January 3, 2001, Tennessee Gas Pipeline Company (Tennessee), tendered for filing a notice of a change in rates for the October 18, 2000 Negotiated Rate Agreement between Tennessee and Dynegy Energy Marketing and Trade (Dynegy). The notice substitutes a fixed rate in place of a Margin calculation for certain volumes for TGP Service Package No. 35092. The fixed prices are effective from January 2, 2001 through January 31, 2001.

Any person desiring to protest said filing should file a protest with the Federal Energy Regulatory Commission, 888 First Street, NE., Washington, DC 20426, in accordance with Section 385.211 of the Commission's Rules and Regulations. All such protests must be filed on or before January 18, 2001. Protests will be considered by the Commission in determining the appropriate action to be taken, but will not serve to make protestants parties to the proceedings. Copies of this filing are on file with the Commission and are available for public inspection in the Public Reference Room. This filing may be viewed on the web at http://www.ferc.fed.us/online/rims.htm (call 202–208–2222 for assistance). Comments and protests may be filed electronically via the internet in lieu of paper. See, 18 CFR 385.2001(a)(1)(iii) and the instructions on the Commission's web site at http://www.ferc.fed.us/efi/doorbell.htm.

David P. Boergers,

Secretary.

[FR Doc. 01–1421 Filed 1–17–01; 8:45 am]

BILLING CODE 6717–01–M

DEPARTMENT OF ENERGY

Federal Energy Regulatory Commission

[Docket No. EG01–96–000, et al.]

PSEG Nuclear LLC, et al.; Electric Rate and Corporate Regulation Filings

January 11, 2001.

Take notice that the following filings have been made with the Commission:

1. PSEG Nuclear LLC

[Docket No. EG01–96–000]

Take notice that on December 29, 2000, PSEG Nuclear LLC (PSEG Nuclear or Applicant), having its principal place of business at 80 Park Plaza, T–16, Newark, New Jersey, filed with the Federal Energy Regulatory Commission an application for redetermination of exempt wholesale generator status pursuant to Part 365 of the Commission's regulations.

PSEG Nuclear is a limited liability company organized under the laws of the State of Delaware. PSEG Nuclear will be engaged, directly or indirectly through an affiliate as defined in Section 2(a)(11)(B) of the Public Utility Holding Company Act of 1935, exclusively in owning, or both owning and operating eligible generating facilities, and engaging in sales of electric energy at wholesale.

Comment date: February 1, 2001, in accordance with Standard Paragraph E at the end of this notice. The Commission will limit its consideration of comments to those that concern the adequacy or accuracy of the application.

2. Duke Energy Audrain, LLC

[Docket No. EG01–97–000]

Take notice that on January 3, 2001, Duke Energy Audrain, LLC (Duke Audrain) filed an application with the Federal Energy Regulatory Commission (the Commission) for determination of exempt wholesale generator status pursuant to Section 32 of the Public Utility Holding Company Act of 1935, as amended, and Part 365 of the Commission's regulations.

Duke Audrain is a Delaware limited liability company that will be engaged directly and exclusively in the business of owning and operating all or part of one or more eligible facilities to be located in Audrain County, Missouri. The eligible facilities will consist of an approximately 640 MW natural gas-fired, simple cycle electric generation plant and related interconnection facilities. The output of the eligible facilities will be sold at wholesale.

Comment date: February 1, 2001, in accordance with Standard Paragraph E at the end of this notice. The Commission will limit its consideration of comments to those that concern the adequacy or accuracy of the application.

3. Guadalupe Power Partners, LP

[Docket No. EG01–98–000]

Take notice that on January 4, 2001, Guadalupe Power Partners, LP (GPP), filed with the Federal Energy Regulatory Commission an application for redetermination of exempt wholesale generator status pursuant to Part 365 of the Commission's regulations.

GPP is a Delaware limited partnership which will own and/or operate a natural gas-fired electric generating facility with an expected generating capacity of 1,000 MW to be located in Guadalupe County, Texas within the region governed by the Electric Reliability Council of Texas (ERCOT) and sell electricity at wholesale.

Comment date: February 1, 2001, in accordance with Standard Paragraph E at the end of this notice. The Commission will limit its consideration of comments to those that concern the adequacy or accuracy of the application.

4. Hamakua Energy Partners, L.P.

[Docket No. EG01–99–000]

Take notice that on January 8, 2001, Hamakua Energy Partners, L.P., a Hawaii limited partnership, with its principal office located at J. A. Jones Drive, Charlotte, North Carolina 28287, filed with the Federal Energy Regulatory Commission (Commission) information with respect to a change in facts relative to its status as an exempt wholesale generator and an Application for determination that it remains an exempt wholesale generator pursuant to Part 365 of the Commission's regulations and Section 32 of the Public Utility Holding Company Act of 1935, as amended. Applicant is a Hawaii limited partnership that will be engaged directly and exclusively in operating an

approximately 63 MW net naphtha and distillate oil-fired power plant (the Facility) located in Honakaa, in the northern coastal region of the island of Hawaii, and selling energy at wholesale from the Facility.

Comment date: February 1, 2001, in accordance with Standard Paragraph E at the end of this notice. The Commission will limit its consideration of comments to those that concern the adequacy or accuracy of the application.

5. MEP Pleasant Hill Operating, LLC

[Docket No. EG01–100–000]

Take notice that on January 8, 2000, MEP Pleasant Hill Operating, LLC (MEPPH Operating), filed with the Federal Energy Regulatory Commission (Commission) an application for determination of exempt wholesale generator status pursuant to Part 365 of the Commission's regulations and Section 32(a) of the Public Utility Holding Company Act of 1935. MEPPH Operating and CPN Pleasant Hill Operating, LLC (CPNPH Operating) will operate and sell power at wholesale from generation facilities under construction in Cass County, Missouri.

Comment date: February 1, 2001, in accordance with Standard Paragraph E at the end of this notice. The Commission will limit its consideration of comments to those that concern the adequacy or accuracy of the application.

6. North Carolina Power Holdings, LLC

[Docket No. EG01–101–000]

Take notice that on January 8, 2001, North Carolina Power Holdings, LLC (NCPH), a limited liability company with its principal place of business at 1400 Smith Street, Houston, Texas 77002, filed with the Federal Energy Regulatory Commission (Commission) an application for determination of exempt wholesale generator status pursuant to Part 365 of the Commission's regulations.

NCPH states that it will be engaged directly and exclusively in the business of owning two 35 MW generation facilities located in Elizabethtown and Lumberton, North Carolina. NCPH will sell its capacity exclusively at wholesale. A copy of the filing was served upon the Securities and Exchange Commission and the North Carolina Utilities Commission.

Comment date: February 1, 2001, in accordance with Standard Paragraph E at the end of this notice. The Commission will limit its consideration of comments to those that concern the adequacy or accuracy of the application.

7. Ogden Martin Systems of Fairfax, Inc.

[Docket No. ES01–11–002]

Take notice that on January 5, 2001, Ogden Martin Systems of Fairfax, Inc. filed with the Commission an amendment to its application in the above-referenced proceeding, seeking to increase the amount of debt it may issue from $142 million to $160 million.

Comment date: January 23, 2001, in accordance with Standard Paragraph E at the end of this notice.

8. Duke Energy Audrain, LLC

[Docket No. ER01–884–000]

Take notice that on January 3, 2001, Duke Energy Audrain, LLC (Duke Audrain), tendered for filing pursuant to Section 205 of the Federal Power Act its proposed FERC Electric Tariff No. 1.

Duke Audrain seeks authority to sell energy and capacity, as well as ancillary services, at market-based rates, together with certain waivers and preapprovals. Duke Audrain also seeks authority to sell, assign, or transfer transmission rights that it may acquire in the course of its marketing activities.

Duke Audrain seeks an effective date sixty (60) days from the date of filing for its proposed rate schedules.

Comment date: January 24, 2001, in accordance with Standard Paragraph E at the end of this notice.

9. American Electric Power Service Corporation

[Docket No. ER01–67–001]

Take notice that on January 8, 2001, American Electric Power Service Corporation tendered for filing, on behalf of the operating companies of the American Electric Power System (AEP), a proposed amendment to the Open Access Transmission Tariff accepted for filing by the Commission in Docket No. ER98–2786–000. The amendment is being submitted in response to a December 7, 2000 deficiency letter in this docket.

AEP requests waiver of notice to permit an effective date of December 1, 2000 for such amendments.

Copies of the filing have been served upon AEP's transmission customers and the stat utility regulatory commissions of Arkansas, Indiana, Kentucky, Louisiana, Michigan, Ohio, Oklahoma, Tennessee, Texas, Virginia and West Virginia.

Comment date: January 29, 2001, in accordance with Standard Paragraph E at the end of this notice.

10. American Electric Power Service Corporation

[Docket No. ER01–257–001]

Take notice that on January 8, 2001, the American Electric Power Service Corporation (AEPSC), tendered for filing an Amendment to Filing in No. Docket ER01–257–000. In AEPSC's initial filing on October 25, 2000, AEPSC failed to provide designations for a Transaction Confirmation Agreement (Confirmation Agreement) which was submitted for filing by the AEP Companies in the above referenced docket. Pursuant to the Commissions' Order No. 614 in Docket No. RM99–12–000, AEPSC respectfully designates the Confirmation Agreement with the City of Vernon, California as Service Agreement No. 269 under the Wholesale Market Tariff of the AEP Operating Companies (Power Sales Tariff).

The Power Sales Tariff was accepted for filing effective October 10, 1997, and has been designated AEP Companies' FERC Electric Tariff Original Volume No. 5. AEPSC respectfully requests waiver of notice to permit this the Confirmation Agreement to be made effective as initially requested on or prior to October 1, 2000.

A copy of the filing was served upon the Parties and the State Utility Regulatory Commissions of Arkansas, Indiana, Kentucky, Louisiana, Michigan, Ohio, Oklahoma, Tennessee, Texas, Virginia and West Virginia.

Comment date: January 29, 2001, in accordance with Standard Paragraph E at the end of this notice.

11. Atlantic City Electric Company, Baltimore Gas & Electric Company, Delmarva Power & Light Company, Metropolitan Edison Company, PP&L Inc., PECO Energy Company, Potomac Electric Power Company, Public Service Electric and Gas Company, UGI Utilities, Inc.

[Docket No. ER01–897–000]

Take notice that on January 5, 2001, Potomac Electric Power Company (Pepco), tendered for filing a Notice of Assignment pursuant to which PPL Montour, LLC (PPLM) and Allegheny Energy Supply Conemaugh, LLC (AESC) will, as part of Pepco's transfer of its ownership interests in the Conemaugh Generating Station to PPLM and AESC, replace Pepco as a Generating Station Owner under the Conemaugh Generating Station Interconnection Agreement (Agreement) which is designated as follows: Atlantic City Electric Company Rate Schedule FERC No. 75; Baltimore Gas & Electric Company Rate Schedule FERC No. 58; Delmarva Power & Light Company Rate

Schedule FERC No. 124; Metropolitan Edison Company Rate Schedule FERC No. 77; PP&L Inc. Rate Schedule FERC No. 168; PECO Energy Company Rate Schedule FERC No. 123; Potomac Electric Power Company Rate Schedule FERC No. 46; Public Service Electric and Gas Company Rate Schedule FERC No. 166; and, UGI Utilities, Inc. Rate Schedule FERC No. 9.

The Agreement will become effective at the time Pepco's ownership interest in the Conemaugh Generating Station is transferred to PPLM and AESC.

Comment date: January 26, 2001, in accordance with Standard Paragraph E at the end of this notice.

12. Arizona Public Service Company

[Docket No. ER01–898–000]

Take notice that on January 5, 2001, Arizona Public Service Company (APS), tendered for filing umbrella Service Agreements to provide Short-Term Firm and Non-Firm Point-to-Point Transmission Service to Morgan Stanley Capital Group, Inc., under APS' Open Access Transmission Tariff.

A copy of this filing has been served on Morgan Stanley Capital Group, Inc., and the Arizona Corporation Commission.

Comment date: January 26, 2001, in accordance with Standard Paragraph E at the end of this notice.

13. Louisville Gas and Electric Company, Kentucky Utilities Company

[Docket No. ER01–899–000]

Take notice that on January 5, 2001, Louisville Gas and Electric Company (LG&E) and Kentucky Utilities Company (KU), 220 West Main Street, Louisville, Kentucky 40202, tendered for filing with the Commission a notice that LG&E and KU were withdrawing from the Midwest Independent System Operator, Inc. (MISO), a motion requesting the Commission to authorize and approve such withdrawal effective upon the earliest date on which the Commission authorizes and approves the withdrawal from the MISO of either Commonwealth Edison Company or Illinois Power Company, and a motion requesting the Commission to authorize the recovery of LG&E's and KU's associated costs.

Comment date: January 26, 2001, in accordance with Standard Paragraph E at the end of this notice.

14. Pennsylvania Electric Company

[Docket No. ER01–900–000]

Take notice that on January 5, 2001, Potomac Electric Power Company (Pepco), tendered for filing a Notice of Assignment pursuant to which PPL Montour, LLC (PPLM) and Allegheny Energy Supply Conemaugh, LLC (AESC) will replace Pepco under the 115 kV Seward-Conemaugh Interconnection Facilities Agreement (Agreement), Penelec Rate Schedule No. 63, as part of Pepco's transfer of its ownership interests in the Conemaugh Generating Station to PPLM and AESC.

The Agreement will become effective at the time Pepco's ownership interest in the Conemaugh Generating Station is transferred to PPLM and AESC.

Comment date: January 26, 2001, in accordance with Standard Paragraph E at the end of this notice.

15. Pennsylvania Electric Company

[Docket No. ER01–901–000]

Take notice that on January 5, 2001, Potomac Electric Power Company (Pepco), tendered for filing a Notice of Assignment pursuant to which PPL Montour, LLC (PPLM) and Allegheny Energy Supply Conemaugh, LLC (AESC) will replace Pepco under the Conemaugh Generating Station Operating Agreement (Agreement), Penelec Rate Schedule No. 100, as part of Pepco's transfer of its ownership interests in the Conemaugh Generating Station to PPLM and AESC.

The Agreement will become effective at the time Pepco's ownership interest in the Conemaugh Generating Station is transferred to PPLM and AESC.

Comment date: January 26, 2001, in accordance with Standard Paragraph E at the end of this notice.

16. California Power Exchange Corporation

[Docket No. ER01–902–000]

Take notice that on January 5, 2001, the California Power Exchange Corporation (CalPX), tendered for filing its proposed Tariff Amendment No. 22, consisting of a revised Sheet No. 59 and a new Sheet No. 59A to its Tariff. The purpose of Tariff Amendment No. 22 is to change the credit requirements pertaining to its current full requirements customers, namely Pacific Gas and Electric Company, Southern California Edison Company, and San Diego Gas Electric Company (IOUs). Tariff Amendment No. 22 modifies the credit rating requirements pertaining to the IOUs as a result of the Commission's December 15, 2000 order (93 FERC ¶ 61,294) and as a result of recent changes in institutional credit ratings for PG&E and Edison.

To permit the IOU's to continue trading in the CalPX Markets, CalPX requests waiver of the Commission's notice requirements to permit the tendered filing to become effective as of the date of this filing.

CalPX states that it has served this filing on its participants and on the California Public Utilities Commission and has also posted this filing on its website (*www.calpx.com*).

Comment date: January 26, 2001, in accordance with Standard Paragraph E at the end of this notice.

17. Central Hudson Gas & Electric Corporation

[Docket No. ER01–903–000]

Take notice that on January 8, 2001, Central Hudson Gas and Electric Corporation (Central Hudson), tendered for filing its Rate Schedule FERC No. 202 which sets forth the terms and charges for substation service provided by the Company to Consolidated Edison Company of New York, Inc.

Rate Schedule FERC No. 202, which supersedes Rate Schedule FERC No. 43, also provides the development of actual costs for 1999 related to the provision of the aforementioned substation service.

Central Hudson indicates that the actual costs amounted to $274,659 for 1999 and will be the basis, excluding the New York State Gross Earnings Tax which was eliminated effective January 1, 2000, on which the estimated charges of $272,599 for 2000 will be billed.

Central Hudson states that a copy of its filing was served on Con Edison and the State of New York Public Service Commission.

Comment date: January 29, 2001, in accordance with Standard Paragraph E at the end of this notice.

18. MEP Pleasant Hill Operating, LLC

[Docket No. ER01–905–000]

Take notice that on January 8, 2001, MEP Pleasant Hill Operating, LLC (MEPPH Operating), an indirect wholly owned subsidiary of UtiliCorp United Inc., tendered for filing a rate schedule to engage in sales at market-based rates and two service agreements thereunder. MEPPH Operating included in its filing a proposed code of conduct.

Comment date: January 29, 2001, in accordance with Standard Paragraph E at the end of this notice.

19. Xcel Energy Services

[Docket No. ER01–907–000]

Take notice that on January 8, 2001, Xcel Energy Services Inc. (XES), on behalf of Cheyenne Light, Fuel & Power (CLF&P), tendered for filing a letter approving its application for membership in the Western Systems Power Pool (WSPP).

CLF&P requests the Commission to allow its membership in the WSPP to become effective on January 9, 2001.

Comment date: January 29, 2001, in accordance with Standard Paragraph E at the end of this notice.

20. Allegheny Energy Service Corporation, on Behalf of Monongahela Power Company, The Potomac Edison Company, West Penn Power Company (Allegheny Power)

[Docket No. ER01–908–000]

Take notice that on January 8, 2001, Allegheny Energy Service Corporation on behalf of Monongahela Power Company, The Potomac Edison Company and West Penn Power Company (Allegheny Power), filed Service Agreement No. 334 to add Strategic Energy, L.L.C. to Allegheny Power's Open Access Transmission Service Tariff.

The proposed effective date under the agreement is January 5, 2001.

Copies of the filing have been provided to the Public Utilities Commission of Ohio, the Pennsylvania Public Utility Commission, the Maryland Public Service Commission, the Virginia State Corporation Commission, and the West Virginia Public Service Commission.

Comment date: January 29, 2001, in accordance with Standard Paragraph E at the end of this notice.

21. Consumers Energy Company

[Docket No. ER01–909–000]

Take notice that on January 8, 2001, Consumers Energy Company (Consumers), tendered for filing executed Firm and Non-Firm Point to Point Transmission Service Agreements with Nordic Electric, LLC (Customer) pursuant to the Joint Open Access Transmission Service Tariff filed on December 31, 1996 by Consumers and The Detroit Edison Company (Detroit Edison).

Both Agreements have effective dates of January 1, 2001.

Copies of the filed agreements were served upon the Michigan Public Service Commission, Detroit Edison, and the Customer.

Comment date: January 29, 2001, in accordance with Standard Paragraph E at the end of this notice.

22. Consumers Energy Company

[Docket No. ER01–910–000]

Take notice that on January 8, 2001, Consumers Energy Company (Consumers), tendered for filing executed Firm and Non-Firm Point to Point Transmission Service Agreements with Commonwealth Edison Company and the City of Holland, Michigan Board of Public Works (Customers) pursuant to Consumers' Open Access Transmission Service Tariff filed on July 9, 1996 by Consumers.

All four Agreements have effective dates of January 1, 2001.

Copies of the filed agreements were served upon the Michigan Public Service Commission and the Customers.

Comment date: January 29, 2001, in accordance with Standard Paragraph E at the end of this notice.

23. Niagara Mohawk Power Corporation

[Docket No. ER01–906–000]

Take notice that on January 8, 2001, Niagara Mohawk Power Corporation (Niagara Mohawk), tendered for filing an amendment to Niagara Mohawk's firm transmission service agreement with AES NY, L.L.C., FERC Rate Schedule No. 165, pursuant to Section 35.13 of the Code of Federal Regulations, 18 CFR 35.13.

Comment date: January 29, 2001, in accordance with Standard Paragraph E at the end of this notice.

24. San Diego Gas & Electric Company, Complainant, v. Sellers of Energy and Ancillary Services Into Markets Operated by the California Independent System Operator and the California Power Exchange, Respondents

[Docket No. EL00–95–011]

Take notice that on January 8, 2001, Southern California Edison Company (Edison) tendered for filing pursuant to Ordering Paragraph (A) of the commission's December 15, 2000 Order Directing Remedies for California Wholesale Electric Markets (the Order), 93 FERC ¶ 61,294, its compliance filing.

Comment date: February 1, 2001, in accordance with Standard Paragraph E at the end of this notice.

Standard Paragraphs

E. Any person desiring to be heard or to protest such filing should file a motion to intervene or protest with the Federal Energy Regulatory Commission, 888 First Street, NE., Washington, DC 20426, in accordance with Rules 211 and 214 of the Commission's Rules of Practice and Procedure (18 CFR 385.211 and 385.214). All such motions or protests should be filed on or before the comment date. Protests will be considered by the Commission in determining the appropriate action to be taken, but will not serve to make protestants parties to the proceeding. Any person wishing to become a party must file a motion to intervene. Copies of these filings are on file with the Commission and are available for public inspection. This filing may also be viewed on the Internet at http://www.ferc.fed.us/online/rims.htm (call 202–208–2222 for assistance).

David P. Boergers,

Secretary.

[FR Doc. 01–1477 Filed 1–17–01; 8:45 am]

BILLING CODE 6717–01–P

DEPARTMENT OF ENERGY

Federal Energy Regulatory Commission

[Docket No. EC01–46–000, et al.]

Virginia Electric and Power Company, et al.; Electric Rate and Corporate Regulation Filings

January 10, 2001.

Take notice that the following filings have been made with the Commission:

1. Virginia Electric and Power Company

[Docket No. EC01–46–000]

Take notice that on January 8, 2001, Virginia Electric and Power Company (the Company) filed Exhibit G to supplement its Section 203 application in the above-captioned proceeding (the Application). In the Application, the Company committed to submit other federal and state applications in Exhibit G to the Commission when those applications are complete.

The Applicant states that copies of the filing have been served upon the utility commissions of the states of Virginia and North Carolina and the Company's wholesale requirements customers.

Comment date: January 24, 2001, in accordance with Standard Paragraph E at the end of this notice.

2. San Joaquin Cogen Limited

[Docket No. ER01–896–000]

Take notice that on January 5, 2001, San Joaquin Cogen Limited (San Joaquin), an Exempt Wholesale Generator that owns and operates a natural gas-fired cogeneration facility in Lathrop, California tendered for filing a Power Purchase/Sale Transaction Confirmation (Agreement) in the above-captioned docket.

San Joaquin requests that the Agreement be permitted to become effective January 1, 2001.

Comment date: January 26, 2001, in accordance with Standard Paragraph E at the end of this notice.

3. FirstEnergy Operating Companies

[Docket No. ER00–3771–003]

Take notice that on January 5, 2001, The Cleveland Electric Illuminating Company, Ohio Edison Company, Pennsylvania Power Company and The

Toledo Edison Company (collectively, the FirstEnergy Operating Companies), tendered for filing a red-lined version of their FERC Electric Tariff, First Revised Volume No. 3, in which they are offering to make available ancillary services and interconnected operations services. The FirstEnergy Operating Companies state that this tariff identifies modifications to a tariff submitted in September 2000 that were required by the Order Accepting for Filing, as Modified, Proposed Tariff and Service Agreement which was issued in this proceeding on November 22, 2000.

Comment date: January 26, 2001, in accordance with Standard Paragraph E at the end of this notice.

4. Southern Company Services, Inc.

[Docket Nos. ER99–3531–002; ER99–4384–002]

Take notice that on January 5, 2001, Southern Company Services, Inc., as agent for Alabama Power Company, Georgia Power Company, Gulf Power Company, Mississippi Power Company and Savannah Electric and Power Company (collectively Southern Companies), tendered for filing a refund report in compliance with the Commission's November 22, 2000, Letter Order in the above-referenced proceeding. The refund results from settlement rates associated with Southern Companies' generator balancing service tariff.

Comment date: January 26, 2001, in accordance with Standard Paragraph E at the end of this notice.

5. Florida Power & Light Company

[Docket No. ER01–874–000]

Take notice that on January 3, 2001, Florida Power & Light Company (FPL), tendered for filing Service Agreements between El Paso Merchant Energy, L.P.; DTE Energy Trading, Inc.; and Rainbow Energy Marketing Corporation for service pursuant to FPL's Market Based Rates Tariff

FPL requests that the Service Agreements be made effective on December 7, 2000.

Comment date: January 24, 2001, in accordance with Standard Paragraph E at the end of this notice.

6. Cinergy Services, Inc.

[Docket No. ER01–875–000]

Take notice that on January 3, 2001, Cinergy Services, Inc. (Provider), tendered for filing a Firm Point-To-Point Service Agreement under Cinergy's Open Access Transmission Service Tariff (OATT) entered into between Provider and Cinergy Services, Inc., (Customer).

This service agreement has a yearly firm transmission service with LGE Energy via the Gibson Unit Nos. 1–5 Generating Station.

Provider and Customer are requesting an effective date of January 1, 2001.

Comment date: January 24, 2001, in accordance with Standard Paragraph E at the end of this notice.

7. Cinergy Services, Inc.

[Docket No. ER01–876–000]

Take notice that on January 3, 2001, Cinergy Services, Inc. (Provider), tendered for filing a Firm Point-To-Point Service Agreement under Cinergy's Open Access Transmission Service Tariff (OATT) entered into between Provider and Cinergy Services, Inc., (Customer).

This service agreement has a yearly firm transmission service with LGE Energy via the Gibson Unit Nos. 1–5 Generating Station.

Provider and Customer are requesting an effective date of January 1, 2001.

Comment date: January 24, 2001, in accordance with Standard Paragraph E at the end of this notice.

8. Cinergy Services, Inc.

[Docket No. ER01–877–000]

Take notice that on January 3, 2001, Cinergy Services, Inc. (Provider), tendered for filing a Firm Point-To-Point Service Agreement under Cinergy's Open Access Transmission Service Tariff (OATT) entered into between Provider and Cinergy Services, Inc., (Customer).

This service agreement has a yearly firm transmission service with LGE Energy via the Gibson Unit Nos. 1–5 Generating Station.

Provider and Customer are requesting an effective date of January 1, 2001.

Comment date: January 24, 2001, in accordance with Standard Paragraph E at the end of this notice.

9. Cinergy Services, Inc.

[Docket No. ER01–878–000]

Take notice that on January 3, 2001, Cinergy Services, Inc. (Provider), tendered for filing a Non-Firm Point-To-Point Service Agreement under Cinergy's Open Access Transmission Service Tariff (OATT) entered into between Cinergy and Engage Energy America Corp., (Customer).

Provider and Customer are requesting an effective date of December 11, 2000.

Comment date: January 24, 2001, in accordance with Standard Paragraph E at the end of this notice.

10. Cinergy Services, Inc.

[Docket No. ER01–879–000]

Take notice that on January 3, 2001, Cinergy Services, Inc. (Provider), tendered for filing a Firm Point-To-Point Service Agreement under Cinergy's Open Access Transmission Service Tariff (OATT) entered into between Provider and Engage Energy America Corp., (Customer).

Provider and Customer are requesting an effective date of December 11, 2000.

Comment date: January 24, 2001, in accordance with Standard Paragraph E at the end of this notice.

11. Cinergy Services, Inc.

[Docket No. ER01–880–000]

Take notice that on January 3, 2001, Cinergy Services, Inc. (Provider), tendered for filing a service agreement and a Network Operating Agreement under Cinergy's Open Access Transmission Service Tariff (OATT) entered into between Provider and Strategic Energy, L.L.C., (Customer).

Provider and Customer are requesting an effective date of December 14, 2000.

Comment date: January 24, 2001, in accordance with Standard Paragraph E at the end of this notice.

12. Cinergy Services, Inc.

[Docket No. ER01–881–000]

Take notice that on January 3, 2001, Cinergy Services, Inc. (Provider), tendered for filing a service agreement and a Network Operating Agreement under Cinergy's Open Access Transmission Service Tariff (OATT) entered into between Provider and FirstEnergy Services Corp., (Customer).

Provider and Customer are requesting an effective date of December 14, 2000.

Comment date: January 24, 2001, in accordance with Standard Paragraph E at the end of this notice.

13. Cinergy Services, Inc.

[Docket No. ER01–882–000]

Take notice that on January 3, 2001, Cinergy Services, Inc. (Provider), tendered for filing a service agreement and a Network Operating Agreement under Cinergy's Open Access Transmission Service Tariff (OATT) entered into between Provider and Newenergy, Inc., (Customer).

Provider and Customer are requesting an effective date of December 14, 2000.

Comment date: January 24, 2001, in accordance with Standard Paragraph E at the end of this notice.

14. Cinergy Services, Inc.

[Docket No. ER01–883–000]

Take notice that on January 3, 2000, Cinergy Services, Inc. (Provider),

tendered for filing a service agreement and a Network Operating Agreement under Cinergy's Open Access Transmission Service Tariff (OATT) entered into between Provider and Allegheny Energy Supply Company, LLC (Customer).

Provider and Customer are requesting an effective date of December 14, 2000.

Comment date: January 24, 2001, in accordance with Standard Paragraph E at the end of this notice.

15. PJM Interconnection, L.L.C.

[Docket No. ER01–885–000]

Take notice that on January 3, 2001, PJM Interconnection, L.L.C. (PJM), tendered for filing an executed interim interconnection service agreement between PJM and PSEG Fossil L.L.C.

PJM requests a waiver of the Commission's 60-day notice requirement to permit the effective dates agreed to by the parties.

Copies of this filing were served upon PSEG Fossil L.L.C. and the state electric utility regulatory commissions within the PJM control area.

Comment date: January 24, 2001, in accordance with Standard Paragraph E at the end of this notice.

16. Southern Indiana Gas and Electric Company

[Docket No. ER01–886–000]

Take notice that on January 4, 2001, Southern Indiana Gas and Electric Company (SIGECO), on tendered for filing service agreements for firm and non-firm transmission service under Part II of its Transmission Services Tariff with Engage Energy America Corp. and for firm transmission service with Aquila Energy Marketing Corporation, respectively.

Copies of the filing were served upon each of the parties to each service agreements.

Comment date: January 24, 2001, in accordance with Standard Paragraph E at the end of this notice.

17. New England Power Company

[Docket No. ER01–888–000]

Take notice that on January 3, 2001, New England Power Company (NEP), tendered for filing a service agreement between NEP and American Paper Mills of Vermont, Inc. (American) for Firm Local Generation Delivery Service under NEP's FERC Electric Tariff, Original Volume No. 9.

Copies of the filing have been served upon American and the Vermont Public Service Board.

Comment date: January 24, 2001, in accordance with Standard Paragraph E at the end of this notice.

18. Boston Edison Company

[Docket No. ER01–890–000]

Take notice that on January 4, 2001, Boston Edison Company, tendered for filing with the Commission an unexecuted Interconnection Agreement Between Sithe Mystic Development LLC and Boston Edison Company.

Comment date: January 25, 2001, in accordance with Standard Paragraph E at the end of this notice.

19. Allegheny Energy Service Corporation on behalf of Allegheny Energy Supply Company, LLC

[Docket No. ER01–891–000]

Take notice that on January 4, 2000, Allegheny Energy Service Corporation on behalf of Allegheny Energy Supply Company, LLC (Allegheny Energy Supply), tendered for filing Service Agreement No. 107 to add one (1) new Customer to the Market Rate Tariff under which Allegheny Energy Supply offers generation services.

Allegheny Energy Supply proposes to make service available as of January 3, 2001 to Calpine Energy Services, L.P.

Copies of the filing have been provided to the Public Utilities Commission of Ohio, the Pennsylvania Public Utility Commission, the Maryland Public Service Commission, the Virginia State Corporation Commission, the West Virginia Public Service Commission, and all parties of record.

Comment date: January 25, 2001, in accordance with Standard Paragraph E at the end of this notice.

20. Entergy Services, Inc.

[Docket No. ER01–892–000]

Take notice that on January 4, 2001, Entergy Services, Inc., on behalf of Entergy Arkansas, Inc., Entergy Gulf States, Inc., Entergy Louisiana, Inc., Entergy Mississippi, Inc., and Entergy New Orleans, Inc., (collectively, the Entergy Operating Companies), tendered for filing a Non-Firm Point-To-Point Transmission Service Agreement and a Short-Term Firm Point-To-Point Transmission Service Agreement both between Entergy Services, Inc., as agent for the Entergy Operating Companies, and Plum Point Energy Associates, LLC.

Comment date: January 25, 2001, in accordance with Standard Paragraph E at the end of this notice.

21. Carolina Power & Light Company

[Docket No. ER01–893–000]

Take notice that on January 4, 2001, Carolina Power & Light Company (CP&L), tendered for filing an executed Service Agreement between CP&L and the following eligible buyer, Powerex Corp. Service to this eligible buyer will be in accordance with the terms and conditions of CP&L's Market-Based Rates Tariff, FERC Electric Tariff No. 4, for sales of capacity and energy at market-based rates.

CP&L requests an effective date of January 2, 2001 for this Service Agreement.

Copies of the filing were served upon the North Carolina Utilities Commission and the South Carolina Public Service Commission.

Comment date: January 25, 2001, in accordance with Standard Paragraph E at the end of this notice.

22. Entergy Services, Inc.

[Docket No. ER01–894–000]

Take notice that on January 5, 2001, Entergy Services, Inc. (Entergy), on behalf of Entergy Arkansas, Inc., Entergy Gulf States, Inc., Entergy Louisiana, Inc., Entergy Mississippi, Inc., and Entergy New Orleans, Inc. (collectively, the Entergy Operating Companies), tendered for filing a Second Revised Network Integration Transmission Service Agreement between Entergy, as agent for the Entergy Operating Companies, and East Texas Electric Cooperative, Inc., Sam Rayburn G&T Electric Cooperative, Inc., and Tex-La Electric Cooperative of Texas, Inc., (NITSA). Entergy states that this filing includes the Second Amendment to the NITSA and additionally reconciles alterations to the NITSA filed in Docket No. ER00–3610–000 and Docket Nos. EL99–6–001, ER99–231–001, ER99–232–001, and ER99–487–001 (consolidated).

Comment date: January 26, 2001, in accordance with Standard Paragraph E at the end of this notice.

23. The Dayton Power and Light Company

[Docket No. ER01–895–000]

Take notice that on January 5, 2001, The Dayton Power and Light Company (Dayton), tendered for filing a service agreement establishing Enron Power Marketing, Inc. as a customer under the terms of Dayton's FERC Electric Tariff, Original Volume No. 10.

Dayton requests an effective date of one day subsequent to this filing for the service agreements. Accordingly, Dayton requests waiver of the Commission's notice requirements.

Copies of this filing were served upon Enron Power Marketing, Inc. and the Public Utilities Commission of Ohio.

Comment date: January 26, 2001, in accordance with Standard Paragraph E at the end of this notice.

Standard Paragraphs

E. Any person desiring to be heard or to protest such filing should file a motion to intervene or protest with the Federal Energy Regulatory Commission, 888 First Street, NE., Washington, DC 20426, in accordance with rules 211 and 214 of the Commission's Rules of Practice and Procedure (18 CFR 385.211 and 385.214). All such motions or protests should be filed on or before the comment date. Protests will be considered by the Commission in determining the appropriate action to be taken, but will not serve to make protestants parties to the proceeding. Any person wishing to become a party must file a motion to intervene. Copies of these filings are on file with the Commission and are available for public inspection. This filing may also be viewed on the Internet at http://www.ferc.fed.us/ online/rims.htm (call 202–208–2222 for assistance).

David P. Boergers,

Secretary.

[FR Doc. 01–1416 Filed 1–17–01; 8:45 am]

BILLING CODE 6717–01–P

DEPARTMENT OF ENERGY

Federal Energy Regulatory Commission

Notice of Application Accepted for Filing and Soliciting Motions To Intervene and Protests

January 11, 2001.

Take notice that the following hydroelectric application has been filed with the Commission and is available for public inspection:

a. *Type of Application:* New Major License.

b. *Project No.:* 2031–046.

c. *Date Filed:* August 30, 2000.

d. *Applicant:* Springville City.

e. *Name of Project:* Bartholomew Hydroelectric Project.

f. *Location:* Northeast of Springville City, within Bartholomew Canyon and on Hobble Creek, in Utah County, Utah. The project is partially situated on federal lands within the Unita National Forest.

g. *Filed Pursuant to:* Federal Power Act, 16 U.S.C. 791(a)–825(r).

h. *Applicant Contact:* Matthew Cassel at Psomas Consultants, 2825 East Cottonwood Parkway, #120, Salt Lake City, Utah 84121; (801) 270–5777.

i. *FERC Contact:* Jim Haimes, *james.haimes@ferc.fed.us*; (202) 219–2780.

j. *Deadline for Filing Motions to Intervene and Protest:* 60 days from the issuance date of this notice.

All documents (original and eight copies) should be filed with: David P. Boergers, Secretary, Federal Energy Regulatory Commission, 888 First Street, NE, Washington, DC 20426. Comments and protests may be filed electronically via the internet in lieu of paper. See, 18 CFR 385.2001(a)(1)(iii) and the instructions on the Commission's web site at http://www.ferc.fed.us/efi/doorbell.htm.

The Commission's Rules of Practice and Procedure require all persons and entities filing requests to intervene in the subject proceeding to serve a copy of each document they file with the Commission on each person on the official service list for the subject project. Further, if an intervener files comments or documents with the Commission relating to the merits of an issue that may affect the responsibilities of a particular resource agency, they must also serve a copy of the document on that resource agency.

k. This application is not ready for environmental analysis at this time.

l. *Description of the Project:* The project, which does not include a dam or reservoir, operates using relatively small quantities of water removed from underground springs or small creeks located at high elevations and then transported via buried penstocks to three powerhouses and a powerhouse addition having a combined installed capacity of 2,000 kilowatts (kW). The project produces an average of approximately 4,653,000 kilowatt-hours of energy per year, primarily during the high runoff season each spring. Flows used to generate electricity either are diverted to the licensee's water distribution system for domestic and industrial consumption or are released into Hobble Creek.

The project also includes the following two transmission facilities: (1) A 5.9-mile-long line, which includes one 1-mile-long, underground segment and a 4.9-mile-long overhead segment, from Upper Bartholomew powerhouse to Hobble Creek powerhouse; and (2) a 6.9-mile-long, 12.47-kilovolt, underground cable from Lower Bartholomew powerhouse to Springville City's electric distribution system.

Although there are no developed recreational facilities within the boundaries of the subject project, Springville City owns and operates a 200-unit campground and an 18-hole golf course in the general vicinity of Hobble Creek powerhouse. In addition, the Rotary Club operates a park on City-owned property. This facility includes a ball field and a picnic area with approximately 20 tables/grills. Further, the Forest Service operates two small campgrounds along the right fork Hobble Creek.

m. A copy of the application is available for inspection and reproduction at the Commission's Public Reference Room, Room 2A, located at 888 First Street, NE, Washington, DC 20426, or by calling (202) 208–1371. The application may be viewed on the web at http://www.ferc.fed.us/online/rims.htm (call (202) 208–2222 for assistance). A copy is also available for inspection and reproduction at the address in item h above.

n. Anyone may submit a protest or a motion to intervene in accordance with the requirements of Rules of Practice and Procedure, 18 CFR 385.210, 385.211, and 385.214. In determining the appropriate action to take, the Commission will consider all protests filed, but only those who file a motion to intervene in accordance with the Commission's Rules may become a party to the proceeding. Any protests or motions to intervene must be received on or before the specified deadline date for the particular application.

o. All filings must: (1) bear in all capital letters the title ''PROTEST'' or ''MOTION TO INTERVENE;'' (2) set forth in the heading the name of the applicant and the project number of the application to which the filing responds; (3) furnish the name, address, and telephone number of the person protesting or intervening; and (4) otherwise comply with the requirements of 18 CFR 385.2001 through 385.2005. Agencies may obtain copies of the application directly from the applicant. A copy of any protest or motion to intervene must be served upon each representative of the applicant specified in the subject application.

David P. Boergers,

Secretary.

[FR Doc. 01–1426 Filed 1–17–01; 8:45 am]

BILLING CODE 6717–01–M

DEPARTMENT OF ENERGY

Federal Energy Regulatory Commission

Notice of Request for Extension of Time To Commence and Complete Project Construction and Soliciting Comments, Motions To Intervene, and Protests

January 11, 2001.

Take notice that the following application has been filed with the Commission and is available for public inspection:

a. *Application Type:* Request for Extension of Time to Commence Project Construction.

b. *Project No.:* 3701–031.

c. *Date Filed:* December 27, 2000.

d. *Applicant:* Yakima-Tieton Irrigation District.

e. *Name of Project:* Tieton Dam Hydroelectric Project.

f. *Location:* The proposed project would be located at the Bureau of Reclamation's Tieton Dam and Reservoir on the Tieton River, in Yakima County, Washington. The Bureau's dam and reservoir and a portion of the project's proposed transmission line occupy U.S. Forest Service lands.

g. *Filed Pursuant to:* Public Law 104–244.

h. *Applicant Contact:* Richard Dieker, Secretary/Manager, Yakima-Tieton Irrigation District, Tieton Headquarters, 470 Camp 4 Road, Yakima, WA 98908, (509) 678–4101.

i. *FERC Contact:* Any questions on this notice should be addressed to Mr. Lynn R. Miles, at (202) 219–2671, or e-mail address: lynn.miles@ferc.fed.us

j. *Deadline for filing comments and or motions:* February 16, 2001.

All documents (original and eight copies) should be filed with: David P. Boergers, Secretary, Federal Energy Regulatory Commission, Mail Code: 888 First Street, NE., Washington, DC 20426. Comments and protests may be filed electronically via the internet in lieu of paper. See, 18 CFR 385.2001(a)(1)(iii) and the instructions on the Commission's web site at http://www.ferc.fed.us/efi/doorbell.htm.

Please include the project numbers (3701–031) on any comments or motions filed.

k. *Description of the Request:* The licensee has requested that the Commission grant its third and final extension of time request to commence project construction for an additional two-year period. The deadline to commence project construction for FERC Project No. 3701 would be extended to May 31, 2003. The deadline for completion of construction would be extended to May 31, 2005. The licensee's request is filed pursuant to sections 4.200(c) and 4.202(a) of the Commission's regulations..

l. *Locations of the Application:* A copy of the application is available for inspection and reproduction at the Commission's Public Reference Room, located at 888 First Street, NE., Room 2A, Washington, DC 20425, or by calling (202) 208–1371.

This filing may be viewed on http://www.ferc.fed.us/online/rims.htm (call (202) 208–2222 for assistance). A copy is also available for inspection and reproduction at the address in item h above.

m. Individuals desiring to be included on the Commission's mailing list should so indicate by writing to the Secretary of the Commission.

Comments, Protests, or Motions to Intervene—Anyone may submit comments, a protest, or a motion to intervene in accordance with the requirements of Rules of Practice and Procedure, 18 CFR 385.210, .211, .214. In determining the appropriate action to take, the Commission will consider all protests or other comments filed, but only those who file a motion to intervene in accordance with the Commission's Rules may become a party to the proceeding. Any comments, protests, or motions to intervene must be received on or before the specified comment date for the particular application.

Filing and Service of Responsive Documents—Any filings must bear in all capital letters the title ''COMMENTS'', ''RECOMMENDATIONS FOR TERMS AND CONDITIONS'', ''PROTESTS'', OR ''MOTION TO INTERVENE'', as applicable, and the Project Number of the particular application to which the filing refers. Any of the above-named documents must be filed by providing the original and the number of copies provided by the Commission's regulations to: The Secretary, Federal Energy Regulatory Commission, 888 First Street, NE., Washington, DC 20426. A copy of any motion to intervene must also be served upon each representative of the Applicant specified in the particular application.

Agency Comments—Federal, state, and local agencies are invited to file comments on the described application. A copy of the application may be obtained by agencies directly from the Applicant. If an agency does not file comments within the time specified for filing comments, it will be presumed to have no comments. One copy of an agency's comments must also be sent to the Applicant's representatives.

David P. Boergers,

Secretary.

[FR Doc. 01–1427 Filed 1–17–01; 8:45 am]

BILLING CODE 6717–01–M

DEPARTMENT OF ENERGY

Federal Energy Regulatory Commission

Notice of Application Accepted for Filing and Soliciting Motions To Intervene, Protests, and Comments

January 11, 2001.

Take notice that the following hydroelectric application has been filed with the Commission and is available for public inspection:

a. *Type of Application:* Preliminary Permit.

b. *Project No.:* 11862–000.

c. *Date filed:* November 3, 2000.

d. *Applicant:* Crest Energy Company.

e. *Name of Project:* Eagle Mountain Project.

f. *Location:* In Riverside County, California. The project would utilize federal land managed by the Bureau of Land Management.

g. *Filed Pursuant to:* Federal Power Act, 16 U.S.C. 791(a)–825(r).

h. *Applicant Contact:* Mr. Arthur W. Lowe, Eagle Crest Energy Corporation, P.O. Box 2155, Palm Desert, CA 92261, (760) 779–0040.

i. *FERC Contact:* Robert Bell, (202) 219–2806.

j. *Deadline for filing motions to intervene, protests and comments:* 60 days from the issuance date of this notice.

All documents (original and eight copies) should be filed with: David P. Boergers, Secretary, Federal Energy Regulatory Commission, 888 First Street, NE., Washington, DC 20426. ''Comments and protests may be filed electronically via the internet in lieu of paper. See, 18 CFR 385.2001(a)(1)(iii) and the instructions on the Commission's web site at http://www/ferc.fed.us/efi/doorbell.htm''

The Commission's Rules of Practice and Procedure require all interveners filing documents with the Commission to serve a copy of that document on each person in the official service list for the project. Further, if an intervener files comments or documents with the Commission relating to the merits of an issue that may affect the responsibilities of a particular resource agency, they must also serve a copy of the document on that resource agency.

k. *Description of Project:* The proposed pumped storage project would consist of: (1) A proposed 1,150-foot-long, 77-foot-high upper reservoir dam; (2) a proposed 450-foot-long, 27-foot-high upper reservoir dam; (3) a proposed upper reservoir having a surface area of 210 acres, with a storage capacity of 23,600 acre-feet and a

normal water surface elevation of 2,472 feet msl; (4) a proposed lower reservoir having a surface area of 150 acres, with storage capacity of 26,000 acre-feet and normal water surface elevation of 1,100 feet msl located within the East Pit of the inactive Eagle Mountain Mine; (5) two proposed intake and outlet structures; (6) a proposed 4,400-foot-long, 29-foot-diameter tunnel; (7) a proposed powerhouse containing three generating units having a total installed capacity of 1,000 MW; (8) a proposed 8,500-foot-long, 29-foot-diameter tailrace tunnel; (9) a proposed 83-mile-long, 500 kV transmission line; and (10) appurtenant facilities.

The project would have an annual generation of 6,000 GWh that would be sold to a local utility.

1. A copy of the application is available for inspection and reproduction at the Commission's Public Reference Room, located at 888 First Street, NE., Room 2A, Washington, DC 20426, or by calling (202) 208–1371. The application may be viewed on http://www.ferc.fed.us/online/rims.htm (call (202) 208–2222 for assistance). A copy is also available for inspection and reproduction at the address in item h above.

Preliminary Permit—Anyone desiring to file a competing application for preliminary permit for a proposal project must submit the competing application itself, or a notice of intent to file such an application, to the Commission on or before the specified comment date for the particular application (See 18 CFR 4.36). Submission of a timely notice of intent allows an interested person to file the competing preliminary permit application no later than 30 days after the specified comment date for the particular application. A competing preliminary permit application must conform with 18 CFR 4.30(b) and 4.36.

Preliminary Permit—Any qualified development applicant desiring to file a competing development application must submit to the Commission, on or before a specified comment date for the particular application, either a competing development application or a notice of intent to file such an application. Submission of a timely notice of intent to file a development application allows an interested person to file the competing application no later than 120 days after the specified comment date for the particular application. A competing license application must conform with 18 CFR 4.30(b) and 4.36.

Notice of intent—A notice of intent must specify the exact name, business address, and telephone number of the prospective applicant, and must include an unequivocal statement of intent to submit, if such an application may be filed, either a preliminary permit application or a development application (specify which type of application). A notice of intent must be served on the applicant(s) named in this public notice.

Proposed Scope of Studies under Permit—A preliminary permit, if issued, does not authorize construction. The term of the proposed preliminary permit would be 36 months. The work proposed under the preliminary permit would include economic analysis, preparation of preliminary engineering plans, and a study of environmental impacts. Based on the results of these studies, the Applicant would decide whether to proceed with the preparation of a development application to construct and operate the project.

Comments, Protests, or Motions to Intervene—Anyone may submit comments, a protest, or a motion to intervene in accordance with the requirements of Rules of Practice and Procedure, 18 CFR 385.210, .211, .214. In determining the appropriate action to take, the Commission will consider all protests or other comments filed, but only those who file a motion to intervene in accordance with the Commission's Rules may become a party to the proceeding. Any comments, protests, or motions to intervene must be received on or before the specified comment date for the particular application.

Filing and Service of Responsive Documents—Any filings must bear in all capital letters the title ''COMMENTS'', ''NOTICE OF INTENT TO FILE COMPETING APPLICATION'', ''COMPETING APPLICATION'', ''PROTEST'', ''MOTION TO INTERVENE'', as applicable, and the Project Number of the particular application to which the filing refers. Any of the above-named documents must be filed by providing the original and the number of copies provided by the Commission's regulations to: The Secretary, Federal Energy Regulatory Commission, 888 First Street, NE., Washington, DC 20426. An additional copy must be sent to Director, Division of Hydropower Administration and Compliance, Federal Energy Regulatory Commission, as the above-mentioned address. A copy of any notice of intent, competing application or motion to intervene must also be served upon each representative of the Applicant specified in the particular application.

Agency Comments—Federal, state, and local agencies are invited to file comments on the described application. A copy of the application may be obtained by agencies directly from the Applicant. If an agency does not file comments within the time specified for filing comments, it will be presumed to have no comments. One copy of an agency's comments must also be sent to the Applicant's representatives.

David P. Boergers,

Secretary.

[FR Doc. 01–1429 Filed 1–17–01; 8:45 am]

BILLING CODE 6717–01–M

DEPARTMENT OF ENERGY

Federal Energy Regulatory Commission

Notice of Application Accepted for Filing and Soliciting Motions To Intervene, Protests, and Comments

January 11, 2001.

Take notice that the following hydroelectric application has been filed with the Commission and is available for public inspection:

a. *Type of Application:* Preliminary Permit.

b. *Project No.:* 11865–000.

c. *Date filed:* November 20, 2000.

d. *Applicant:* Kabatica General Partners.

e. *Name of Project:* Lower Rocky Creek Project.

f. *Location:* On Rocky Creek, in Whatcom County, Washington. The project would utilize federal lands within Mt. Baker-Snoqualmie National Forest.

g. *Filed Pursuant to:* Federal Power Act, 16 U.S.C. 791(a)–825(r).

h. *Applicant Contact:* Mr. Dan Mahar, Kabatica General Partners, 2210 Huron Street, Bellingham, WA 98226, (360) 739–8128.

i. *FERC Contact:* Robert Bell, (202) 219–2806.

j. *Deadline for filing motions to intervene, protests and comments:* 60 days from the issuance date of this notice.

All documents (original and eight copies) should be filed with: David P. Boergers, Secretary, Federal Energy Regulatory Commission, 888 First Street NE., Washington, DC 20426. ''Comments and protests may be filed electronically via the Internet in lieu of paper. See, 18 CFR 385.2001(a)(1)(iii) and the instructions on the Commission's web site at http://www.ferc.fed.us/efi/doorbell.htm''

The Commission's Rules of Practice and Procedure require all interveners filing documents with the Commission to serve a copy of that document on each person in the official service list

for the project. Further, if an intervener files comments or documents with the Commission relating to the merits of an issue that may affect the responsibilities of a particular resource agency, they must also serve a copy of the document on that resource agency.

k. *Description of Project:* The proposed project would consist of: (1) An existing 60-foot-long, 60-foot-high Rocky Creek Diversion Dam with a negligible impoundment; (2) a proposed intake; (3) a proposed 300-foot-long, 4-foot-diameter steel penstock; (4) a proposed powerhouse containing a generating having an installed capacity of 1 MW; (5) a proposed tailrace; (6) a proposed 2-mile-long 34 kV underground transmission line; and (7) appurtenant facilities.

The project would have an annual generation of 25 MWh that would be sold to a local utility.

1. A copy of the application is available for inspection and reproduction at the Commission's Public Reference Room, located at 888 First Street NE., Room 2A, Washington, DC 20426, or by calling (202) 208–1371. The application may be viewed on http://www.ferc.fed.us/online/rims.htm (call (202) 208–2222 for assistance). A copy is also available for inspection and reproduction at the address in item h above.

Preliminary Permit—Anyone desiring to file a competing application for preliminary permit for a proposed project must submit the competing application itself, or a notice of intent to file such an application, to the Commission on or before the specified comment date for the particular application (see CFR 4.36). Submission of a timely notice of intent allows an interested person to file the competing preliminary permit application no later than 30 days after the specified comment date for the particular application. A competing preliminary permit application must conform with 18 CFR 4.30(b) and 4.36.

Preliminary Permit—Any qualified development applicant desiring to file a competing development application must submit to the Commission, on or before a specified comment date for the particular application, either a competing development application or a notice of intent to file such an application. Submission of a timely notice of intent to file a development application allows an interested person to file the competing application no later than 120 days after the specified comment date for the particular application. A competing license application must conform with 18 CFR 4.30(b) and 4.36.

Notice of intent—A notice of intent must specify the exact name, business address, and telephone number of the prospective applicant, and must include an unequivocal statement of intent to submit, if such an application may be filed, either a preliminary permits application or a development application (specify which type of application). A notice of intent must be served on the applicant(s) named in this public notice.

Proposed Scope of Studies under Permit—A preliminary permit, if issued, does not authorize construction. The term of the proposed preliminary permit would be 36 months. The work proposed under the preliminary permit would include economic analysis, preparation of preliminary engineering plans, and a study of environmental impacts. Based on the results of these studies, the Applicant would decide whether to proceed with the preparation of a development application to construct and operate the project.

Comments, Protests, or Motions to Intervene—Anyone may submit comments, a protest, or a motion to intervene in accordance with the requirements of Rules of Practice and Procedure, 18 CFR 385.210, .211, .214. In determining the appropriate action to take, the Commission will consider all protests or other comments filed, but only those who file a motion to intervene in accordance with the Commission's Rules may become a party to the proceeding. Any comments, protests, or motions to intervene must be received on or before the specified comment date for the particular application.

Filing and Service of Responsive Documents—Any filings must bear in all capital letters the title ''COMMENTS'', ''NOTICE OF INTENT TO FILE COMPETING APPLICATION'', ''COMPETING APPLICATION'', ''PROTEST'', ''MOTION TO INTERVENE'', as applicable, and the Project Number of the particular application to which the filing refers. Any of the above-named documents must be filed by providing the original and the number of copies provided by the Commission's regulations to: The Secretary, Federal Energy Regulatory Commission, 888 First Street, NE., Washington, DC 20426. An additional copy must be sent to Director, Division of Hydropower Administration and Compliance, Federal Energy Regulatory Commission, at the above-mentioned address. A copy of any notice of intent, competing application or motion to intervene must also be served upon each representative of the Applicant specified in the particular application.

Agency Comments—Federal, state, and local agencies are invited to file comments on the described application. A copy of the application may be obtained by agencies directly from the Applicant. If an agency does not file comments within the time specified for filing comments, it will be presumed to have no comments. One copy of an agency's comments must also be sent to the Applicant's representatives.

David P. Boergers,

Secretary.

[FR Doc. 01–1430 Filed 1–17–01; 8:45 am]

BILLING CODE 6717–01–M

DEPARTMENT OF ENERGY

Federal Energy Regulatory Commission

Notice of Application Accepted for Filing and Soliciting Motions To Intervene, Protests, and Comments

January 11, 2001.

Take notice that the following hydroelectric application has been filed with the Commission and is available for public inspection:

a. *Type of Application:* Preliminary Permit.

b. *Project No.:* 11866–000.

c. *Dated filed:* November 30, 2000.

d. *Applicant:* Davis Hydro.

e. *Name of Project:* Rock Creek Diversion Dam Project.

f. *Location:* On the North Fork Feather River, In Plumas County, California. The project would utilize no federal lands. This project is for additional capacity to the licensed Rock Creek and Cresta Dams Project, FERC No. 1962.

g. *Filed Pursuant to:* Federal Power Act, 16 U.S.C. 791(a)–825(r).

h. *Applicant Contact:* Mr. Richard Ely, d.b.a. Davis Hydro, 27264 Meadowbrook Drive, Davis, CA 95616, (530) 753–8864.

i. *FERC Contact:* Robert Bell, (202) 219–2806.

j. *Deadline for filing motions to intervene, protests and comments:* 60 days from the issuance date of this notice.

All documents (original and eight copies) should be filed with: David P. Boergers, Secretary, Federal Energy Regulatory Commission, 888 First Street, NE, Washington, D.C. 20426. Comments and protests may be filed electronically via the internet in lieu of paper. See, 18 CFR 385.2001(a)(1)(iii) and the instructions on the Commission's web site at http://www.ferc.fed.us/efi/doorbell.htm.

The Commission's Rules of Practice and Procedure require all interveners

filing documents with the Commission to serve a copy of that document on each person in the official service list for the project. Further, if an intervener files comments or documents with the Commission relating to the merits of an issue that may effect the responsibilities of a particular resource agency, they must also serve a copy of the document on that resource agency.

k. *Description of Project:* The proposed project would consist of: (1) The existing 550-foot-long, 126-foot-high Rock Creek Diversion Dam; (2) the existing reservoir having a surface area of 80 acres and a storage capacity of 4,669 acre-feet and a normal water surface elevation of 2,216 feet msl; (3) a proposed intake; (4) a proposed powerhouse containing three generating units having a total installed capacity of 900 kW; (5) a proposed 1,300-foot-long 60 kV transmission line; and (9) appurtenant facilities.

The project would have an annual generation of 6 GWh that would be sold to a local utility.

1. A copy of the application is available for inspection and reproduction at the Commission's Public Reference Room, located at 888 First Street, NE, Room 2A Washington, D.C. 20426, or by calling (202) 208–1371. The application may be viewed on http://www.ferc.fed.us/online/rims.htm (call (202) 208–2222 for assistance). A copy is also available for inspection and reproduction at the address in item h above.

Preliminary Permit—Anyone desiring to file a competing application for preliminary permit for a proposed project must submit the competing application itself, or a notice of intent to file such an application, to the Commission or before the specified comment date for the particular application (see 18 CFR 4.36). Submission of a timely notice of intent allows an interested person to file the competing preliminary permit application no later than 30 days after the specified comment date for the particular application. A competing preliminary permit application must conform with 18 CFR 4.30(b) and 4.36.

Preliminary Permit—Any qualified development applicant desiring to file a competing development application must submit to the Commission, on or before a specified comment date for the particular application, either a competing development application or a notice of intent to file such an application. Submission of a timely notice of intent to file a development application allows an interested person to file the competing application no later than 120 days after the specified comment date for the particular application. A competing license application must conform with 18 CFR 4.30(b) and 4.36.

Notice of intent—A notice of intent must specify the exact name, business address, and telephone number of the prospective applicant, and must include an unequivocal statement of intent to submit, if such an application may be filed, either a preliminary permit application or a development application (specify which type of application). A notice of intent must be served on the applicant(s) named in this public notice.

Proposed Scope of Studies under Permit—A preliminary permit, if issued, does not authorize construction. The term of the proposed preliminary permit would be 36 months. The work proposed under the preliminary permit would include economic analysis, preparation of preliminary engineering plans, and a study of environmental impacts. Based on the results of these studies, the Applicant would decide whether to proceed with the preparation of a development application to construct and operate the project.

Comments, Protests, or Motions to Intervene—Anyone may submit comments, a protest, or a motion to intervene in accordance with the requirements of Rules of Practice and Procedure, 18 CFR 385.210, .211, .214. In determining the appropriate action to take, the Commission will consider all protests or other comments filed, but only those who file a motion to intervene in accordance with the Commission's Rules may become a party to the proceeding. Any comments, protests, or motions to intervene must be received on or before the specified comment date for the particular application.

Filing and Service of Responsive Documents—Any filings must bear in all capital letters the title ''COMMENTS'', ''NOTICE OF INTENT TO FILE COMPETING APPLICATION'', ''COMPETING APPLICATION'', ''PROTEST'', ''MOTION TO INTERVENE'', as applicable, and the Project number of the particular application to which the filing refers. Any of the above-named documents must be filed by providing the original and the number of copies provided by the Commission's regulations to: The Secretary, Federal Energy Regulatory Commission, 888 First Street, NE., Washington, DC 20426. An additional copy must be sent to Director, Division of Hydropower Administration and Compliance, Federal Energy Regulatory Commission, at the above-mentioned address. A copy of any notice of intent, competing application or motion to intervene must also be served upon each representative of the Applicant specified in the particular application.

Agency Comments—Federal, state, and local agencies are invited to file comments on the described application. A copy of the application may be obtained by agencies directly from the Applicant. If an agency does not file comments within the time specified for filing comments, it will be presumed to have no comments. One copy of an agency's comments must also be sent to the Applicant's representatives.

David P. Boergers,

Secretary.

[FR Doc. 01–1431 Filed 1–17–01; 8:45 am]

BILLING CODE 6717–01–M

DEPARTMENT OF ENERGY

Federal Energy Regulatory Commission

Notice of Application Accepted for Filing and Soliciting Motions To Intervene, Protests, Comments, Recommendations, and Terms and Conditions

January 11, 2001.

Take notice that the following hydroelectric application has been filed with the Commission and is available for public inspection.

a. *Type of Application:* Conduit Exemption.

b. *Project No.:* 11867–000.

c. *Date Filed:* December 26, 2000.

d. *Applicant:* The Metropolitan Water District of Southern California.

e. *Name of Project:* Diamond Valley Lake Small Conduit Hydroelectric Project.

f. *Location:* In Riverside County, California. The project would be located in the Wadsworth Pumping Plant and would utilize water from Diamond Valley Lake. Diamond Valley Lake, an off-stream reservoir, stores water from the Colorado River Aqueduct that the Wadsworth Plant pumps into it from a forebay on the San Diego Canal. The California Aqueduct will be a source of water for the Lake by gravity flow, when construction of the Inland Feeder pipeline is complete. The project would not occupy federal or tribal lands.

g. *Filed Pursuant to:* Federal Power Act 16 USC 791(a)–825(r).

h. *Applicant Contact:* Mr. Joseph E. Tait, Assistant General Manager, The Metropolitan Water District of Southern California, P.O. Box 54153, Los Angeles, CA 90054–0153, (213) 217–6860.

i. *FERC Contact:* James Hunter, (202) 219–2839.

j. *Status of Environmental Analysis:* This application is ready for environmental analysis at this time—see the following paragraphs about filing responsive documents.

k. Deadline for filing motions to intervene, protests and comments: February 16, 2001.

All documents (original and eight copies) should be filed with: David P. Boergers, Secretary, Federal Energy Regulatory Commission, 888 First Street, NE, Washington, DC 20426. Comments and protests may be filed electronically via the internet in lieu of paper. See, 18 CFR 385.2001(a)(1)(iii) and the instructions on the Commission's web site at http://www.ferc.fed.us/efi/doorbell.htm.

Please include the project number (P–11867–000) on any comments, protests, or motions filed.

The Commission's Rules of Practice and Procedure require all interveners filing documents with the Commission to serve a copy of that document on each person in the official service list for the project. Further, if an intervener files comments or documents with the Commission relating to the merits of an issue that may affect the responsibilities of a particular resource agency, they must also serve a copy of the document on that resource agency.

l. *Description of Project:* The project would consist of modifying the 12 existing pumps in the Wadsworth Plant to operate in a reverse turbine-generating mode. Energy currently dissipated in pressure control valves as water is released from the Lake into the Canal could then be captured. Each pump/generator would have an installed capacity of 3.3 megawatts (MW), for a total installed capacity of 39.6 MW. The average annual generation would be 30 gigawatt hours.

m. *Available Locations of Application:* A copy of the application is available for inspection and reproduction at the Commission's Public Reference and Files Maintenance Branch, located at 888 First Street, NE., Room 2A, Washington, DC 20426, or by calling (202) 208–1371. This filing may be viewed on *http://www.ferc.fed.us/online/rims.htm* (call (202) 208–2222 for assistance). A copy is also available for inspection and reproduction at the address shown in item h above.

Development Application—Any qualified applicant desiring to file a competing application must submit to the Commission, on or before the specified deadline date for the particular application, a competing development application, or a notice of intent to file such an application. Submission of a timely notice of intent allows an interested person to file the competing development application no later than 120 days after the specified deadline date for the particular application. Applications for preliminary permits will not be accepted in response to this notice.

Notice of intent—A notice of intent must specify the exact name, business address, and telephone number of the prospective applicant, and must include an unequivocal statement of intent to submit, if such an application may be filed, either a preliminary permit application or a development application (specify which type of application). A notice of intent must be served on the applicant(s) named in the public notice.

Protests or Motions to Intervene—Anyone may submit a protest or a motion to intervene is accordance with the requirements of Rules of Practice and Procedure, 18 CFR 385.210, 385.211, and 385.214. In determining the appropriate action to take, the Commission will consider all protests filed, but only those who file a motion to intervene in accordance with the Commission's Rules may become a party to the proceeding. Any protests or motions to intervene must be received on or before the specified deadline date for the particular application.

Filing and Service of Responsive Documents—The application is ready for environmental analysis at this time, and the Commission is requesting comments, reply comments, recommendations, terms and conditions, and prescriptions.

The Commission directs, pursuant to Section 4.34(b) of the Regulations (see Order No. 533 issued May 8, 1991, 56 FR 23108, May 20, 1991) that all comments, recommendations, terms and conditions and prescriptions concerning the application be filed with the Commission within 30 days from the issuance date of this notice. All reply comments must be filed with the Commission within 75 days from the date of this notice.

Anyone may obtain an extension of time for these deadlines from the Commission only upon a showing of good cause or extraordinary circumstances in accordance with 18 CFR 385.2008.

All filings must (1) bear in all capital lettters the title ''PROTEST'', ''MOTION TO INTERVENE'', ''NOTICE OF INTENT TO FILE COMPETING APPLICATION,'' ''COMPETING APPLICATION,'' ''COMMENTS,'' or ''REPLY COMMENTS,'' ''RECOMMENDATIONS,'' ''TERMS AND CONDITIONS,'' or ''PRESCRIPTIONS;'' (2) set forth in the heading the name of the applicant and the project number of the application to which the filing responds; (3) furnish the name, address, and telephone number of the person protesting or intervening; and (4) otherwise comply with the requirements of 18 CFR 385.2001 through 385.2005. All comments, recommendations, terms and conditions or prescriptions must set forth their evidentiary basis and otherwise comply with the requirements of 18 CFR 4.34(b). Agencies may obtain copies of the application directly from the applicant. Any of these documents must be filed by providing the original and the number of copies required by the Commission's regulations to: The Secretary, Federal Energy Regulatory Commission, 888 First Street, NE., Washington, DC 20426. A copy of any protest or motion to intervene must be served upon each representative of the applicant specified in the particular application. A copy of all other filings in reference to this application must be accompanied by proof of service on all persons listed in the service list prepared by the Commission in this proceeding, in accordance with 18 CFR 4.34(b) and 385.2010.

David P. Boegers,

Secretary.

[FR Doc. 01–1432 Filed 1–17–01; 8:45 am]

BILLING CODE 6717–01–M

DEPARTMENT OF ENERGY

Federal Energy Regulatory Commission

[Project No. 11730–000]

Alverno Hydroelectric Project; Notice of Teleconference

January 11, 2001.

A teleconference will be convened by staff of the Office of Energy Projects on January 23, 2001, at 2:00 p.m. EST to discuss measures to protect fish and wildlife resources made by the U.S. Fish and Wildlife Service and Michigan Department of Natural Resources under section 10(j) of the Federal Power Act. On October 20, 2000, a notice of availability of draft environmental assessment (DEA) was issued for the Alverno Hydroelectric Project.

In letters dated November 8, 2000, to the U.S. Fish and Wildlife Service and the Michigan Department of natural Resources, the Commission's staff explained that the resource agency recommended measures to protect fish and wildlife resources were considered in the DEA, but did not recommend adopting all of them. We will discuss

the resource agency recommendations that staff did not recommended for adoption.

Anyone wishing to participate by teleconference should call 1–888–928–9122. They will need to give the operator the passcode ''COSTELLO'' and the leader ''JOHN COSTELLO''.

If you have any questions about the teleconference, please call John Costello at (202) 219–2914 or e-mail at john.costello@ferc.fed.us.

David P. Boergers,

Secretary.

[FR Doc. 01–1428 Filed 1–17–01; 8:45 am]

BILLING CODE 6717–01–M

DEPARTMENT OF ENERGY

Federal Energy Regulatory Commission

Notice of Third Interstate Natural Gas Facility-Planning Seminar

January 11, 2001.

The Office of Energy Projects will hold the third in a series of public meetings around the country for the purposes of exploring and enhancing strategies for constructive public participation in the earliest stages of natural gas facility planing. This seminar will be held in Tampa, Florida on Thursday, February 15, 2001. We are inviting interstate natural gas companies; Federal, state and local agencies; landowners and non-governmental organizations with an interest in developing new ways of doing business to join us in this effort. We will discuss the facility planning process, not the merits of any pending or planned pipeline projects.

The staff of the Commission's Office of Energy Projects will give a briefing on the results of our first two seminars in Albany, NY and Chicago, IL. We will discuss problems that were identified and potential solutions that were offered in the seminars.

Join us as we continue to explore new strategies being employed by the natural gas industry, agencies, and citizens to learn about each others' concerns and to engage the public and agencies in participatory project design. Interactive discussions will be held with panelists from various Federal and state agencies, representatives from natural gas companies, and private landowners or citizen representatives who have had relevant experiences. There will be substantial opportunity for the sharing of experiences and knowledge during both the panel discussions and in the interactive ''brainstorming'' session. So, bring your ideas with you and prepare to share them.

The objectives of the meeting are:

- Build upon the discussions from the first two seminars in Albany, NY and Chicago, IL.
- Explore steps taken to identify the parties directly involved with and affected by natural gas facility siting and/or permitting, so they can work together and resolve issues.
- Explore the best avenues for involving people and agencies toward fostering settlements through creative issue resolution.
- To encourage the submission of filings with no or few contested issues in order to reduce the Commission's processing time.
- Discuss the potential benefits of an interstate natural gas pipeline project.

Note: One of our panels this time will focus on the potential benefits of pipelines from each parties' perspective.

We are building on what was learned at our prior meetings and continuing to work toward developing a toolbox of the best available techniques for increasing public involvement and developing solutions to issues during the pre-filing planning process. This will help to plan projects with less opposition that can achieve faster action from the Commission with less controversy and fewer conditions.

The meeting in Tampa, Florida will be held at the Holiday Inn City Centre, located in Tampa, Florida. The meeting is scheduled to start at 9:30 a.m. and finish at 4 p.m. A preliminary agenda and directions to the Holiday Inn City Centre are enclosed. Also, see attachment 2 regarding the selection of locations of future meetings.

If you plan to attend, please email our team at: gasoutreach@ferc.fed.us by February 6, 2001. Or, you can respond via facsimile to Pennie Lewis-Partee at 202–208–0353. Please include in the response the names, addresses, and telephone numbers of all attendees from your organization. We will send an acknowledgment of your request.

To help us enhance our panel discussions, please consider issues and/or questions you would like to have addressed at the meetings and email them to us. If you have any questions, you may contact any of the staff listed below:

Richard Hoffmann, 202/208–0066
Lauren O'Donnell, 202/208–0325
Jeff Shenot, 202/219–2178
Howard Wheeler, 202/208–2299

J. Mark Robinson,

Director, Division of Environmental & Engineering Review, Office of Energy Projects.

Attachments (2).

Agenda

3rd Interstate Natural Gas Facility Planning Seminar, Federal Energy Regulatory Commission, Holiday Inn City Centre, Tampa, Florida

February 15, 2001—9:30 a.m. to 4 p.m.

9:30 a.m.—Introductions

Welcome: Mark Robinson, Director, Division of Environmental & Engineering Review, Office of Energy Projects, FERC, Rich Hoffmann, Office of Energy Projects (OEP), FERC

9:45—The Pipeline Planning/Approval Process—Lauren O'Donnell, OEP, What's the role of FERC?

10:00—Summary of Comments from the Albany and Chicago Meeetings—Rich Hoffmann

10:30—Panel 1. Perspectives on Project Announcement, Route Planning, and How To Work Together—Howard Wheeler, OEP, Moderator.

[Discussion of factors re: announcement of the project, planning of the route, types of surveys needed; extent of disturbance, and who to tell. What are the needs of the various stakeholders?]

Representative from Duke Energy John Ryan, League of Environmental Organizations, Ken Huntington, Florida Department of Environmental Protection

[10-minute discussion by each panelist with interactive Q&A session with panelists and audience for remainder of Panel]

12:00—Lunch

1:00—Panel 2. What are the Benefits (real and potential) of a natural gas project and right-of-way?—Lauren O'Donnell, Moderator

[Discussion of the various types of benefits of a pipeline project to the company, the individual, local area, region and/or state. How to identify them, how to advertize them.]

Pal Mulieri, County Commissioner, Pasco County, FL, John Shafer, Enron, Citizen/NGO Representative

[10 minute discussion by each panelist with interactive Q&A session with panelists and audience for remainder of Panel]

2:00—Discussion by Kearns & West, Inc., on Stakeholder Involvement.—Ann Gunning

2:15—Brainstorming Session * * *

OEP Staff will lend an all-participants discussion of issues regarding:

- How best to involve landowners and communities.
- How best to work with applicants and agencies;
- How to coordinate with multiple agencies/jurisdictions;
- How to get information on the need for a project; and
- How to describe workspace/right-of-way requirements.

3:55—Summary of the Day

Directions to: Holiday Inn City Centre [813–223–1351]

- Holiday Inn City Centre is located at 111 West Fortune Street, Tampa, FL 33602
- Take Interstate I–275 to exit #25—Ashley Street; Keep bearing right (Fortune St. will ''Y'' into Ashley St.—stay right); Holiday Inn is on the right side of the street.

Future Meetings?

Between now and September of 2001, we will conduct additional seminars at locations around the country. Locations for the meetings will be selected based on the history of past, present and especially future pipeline projects where interstate natural gas markets are developing or expanding.

Areas we are considering for meetings include:

Boston, Massachusetts/Portland, Maine Area.—March/April, 2001

Seattle/Puget Sound Washington—May/June, 2001 and/or

Reno, Nevada or Salt Lake City, Utah—July/August, 2001

If you care to voice your opinion about these or other areas, please follow the instructions for contacting us in the notice.

[FR Doc. 01–1420 Filed 1–17–01; 8:45 am]

BILLING CODE 6717–01–M

DEPARTMENT OF ENERGY

Federal Energy Regulatory Commission

[Docket Nos. ER00–3591–000, ER00–1969–001, ER01–94–000, and ER01–180–000]

New York Independent System Operator, Inc.; Supplemental Notice of Technical Conference

January 11, 2001.

The December 11, 2000, notice in this proceeding indicated that a technical conference will be held on January 22 and 23, 2001. That conference will be held in Hearing Rooms 5 and 6 (which will be combined to form one large room) at the offices of the Federal Energy Regulatory Commission, 888 First Street, NE., Washington, DC 20426. The conference will commence at 9:30 a.m. on January 22, 2001.

The agenda for the conference is set forth below. To facilitate efficient discussion, the various industry sectors should designate a spokesperson for their sector, although additional views may be stated as necessary. By 5:00 p.m. on January 18, 2001, participants should inform Stanley Wolf at 202–208–0891 or *stanley.wolf@ferc.fed.us* or Penny Murrell at 202–208–0531 or *penny.murrell@ferc.fed.us*, who the spokesperson for the industry sectors are, and for which sessions/topics listed below. If the industry sector cannot reach consensus on its selection of spokespersons, members of that sector may separately inform Mr. Wolf or Ms. Murrell of their selections. Staff may select some or all of these to participate in the discussions. Rather than repeat at length prior pleadings, spokespersons are requested to merely refer to such pleadings where appropriate.

David P. Boergers,

Secretary.

Technical Conference Schedule

Day 1: Morning Session 9:30–12:30

I. State of the Markets—Panel—3 hours

This panel will be comprised of a representative from each sector including, NYISO, Transmisison Owners, the Public Service Commission of New York State, Generators, Power Marketers, Endusers, and Public Power and Environment. The discussion will focus on the overall state of NYISO's markets; how things are going overall; whether the markets are generally working; what the major problems are in the markets; whether there are structural issues; whether there are any major problems with market rules and, if so, the solutions to the problems. This session will include a presentation by NYISO's Project Priority Team on the current status of its efforts to identify and assign priorities to the tasks facing the NYISO, focusing on preparations for the Summer 2001.

Lunch

Day 1: Afternoon Session 1:30–6:00

II. Energy Markets: What needs to be in place by Summer 2001? 3½ hours

This session will start with a presentation by NYISO on the changes that are proposed to be in place by Summer 2001. Discussions can include the details of the specific projects and whether the priorities proposed for theses projects are reasonable. The discussion may include the following topics:

NYISO ''hybrid'' fixed block generation pricing proposal
Out of merit commitment
Prorata curtailments
System security and adequacy during Summer 2001
Other reliability concerns
NO_X issues
Demand Response Mechanism
Billing issues
Data posting requirements
Communication and market information issues

III. Non-Spinning Reserves Markets—1 hour

This presentation will begin with a presentation by NYISO regarding the state of its NSR markets and the projects underway to make this a more competitive market. Discussions will follow concerning the short-term and long-term problems associated with these markets and the changes that are necessary to address these problems. Topics include:

Competitiveness of 10-minute non-spinning reserves markets
Physical self-supply of operating reserves
Use of western resources to meet operating reserves requirements
Locational pricing

Day 2: Morning Session 9:30–12:00

IV. Market Protection Measures—2½ hours

This session will include a presentation by NYISO regarding the use of its authority under its TEP. Discussions should follow regarding the extent of NYISO's price corrections and issuances of Extraordinary Corrective Actions (ECAs) under this authority and whether certain authority of the TEP should continue temporarily or if certain authority should be made a permanent part of the tariff. Participants may also discuss participant proposals concerning various market protection measures such as: circuit breaker, bid caps, in-city mitigation, and expanded rate correction authority

Lunch

Day 2: Afternoon Session 1:00–4:30

V. Energy Markets: Longer-term Fixes—2 hours

This session will start with a presentation by NYISO regarding the longer term changes necessary in its energy markets. Discussions can focus on the projects that will need to be in place in the longer term and whether the priorities established for these changes are reasonable. Topics include:

Central East constraint
Generation
Seams Issues (RTOs)—Impact of NYISO practices and procedures on regional transactions
Balancing Market Evaluation (BME) performance and improvements
Virtual bidding, trading hubs and other proposals enhancing liquidity

VI. Next Steps—1½ hours

This session will be used to finalize a list of priorities for projects in the energy and NSR markets and to establish deadlines for their completion. This session will also be used to establish any further procedures required, including setting dates for initial and reply comments.

[FR Doc. 01–1418 Filed 1–17–01; 8:45 am]

BILLING CODE 6717–01–M

ENVIRONMENTAL PROTECTION AGENCY

[FRL–6934–2]

Science Advisory Board; Notification of Public Advisory Committee Meeting

Pursuant to the Federal Advisory Committee Act, Public Law 92–463, notice is hereby given that the Science Advisory Board's (SAB's) Executive Committee will meet on the dates and times noted below. All times noted are Eastern Time. The meetings are open to the public, however, seating is limited and available on a first come basis.

1. Executive Committee—Teleconference Meeting—February 1, 2001

The U.S. EPA's Science Advisory Board (SAB) will conduct a public teleconference meeting on Thursday, February 1, 2001 between the hours of 1 and 3 p.m. Eastern Time. The meeting will be coordinated through a conference call connection in Room 6013 in the U.S. EPA, Ariel Rios Building, 1200 Pennsylvania Avenue, NW., Washington, DC 20460. The public is encouraged to attend the meeting in the conference room noted above. However, the public may also attend through a telephonic link, to the extent that lines are available. Additional instructions about how to participate in the conference call can be obtained by calling Ms. Diana Pozun no earlier than one week prior to the meeting (beginning on January 25) at (202) 564–4544, or via e-mail at *pozun.diana@epa.gov.*

Purpose of the Meeting: In this meeting, the Executive Committee plans to review reports from some of its Committees/Subcommittee, most likely including the following:

(a) Natural Attenuation Research Subcommittee of the Environmental Engineering Committee (EEC) ''Review of EPA's Natural Attenuation Research Program'' (see 65 FR 60189, dated October 10, 2000 for details).

(b) Radiation Advisory Committee (RAC): ''An SAB Advisory: A Review of ORIA's Use and Adaptation of GENII Environmental Radiation Dosimetry System, GENII Version 2 (v.2)'' (see 65 FR 18095, dated April 6, 2000 for details).

Availability of Review Materials: Drafts of the reports that will be reviewed at the meeting will be available to the public on the SAB website (http://www.epa.gov/sab) by close-of-business on January 16, 2001.

For Further Information: Any member of the public wishing further information concerning this meeting or wishing to submit brief oral comments must contact Dr. Donald Barnes, Designated Federal Officer, Science Advisory Board (1400A), U.S. Environmental Protection Agency, 1200 Pennsylvania Avenue, NW., Washington, DC 20460; telephone (202) 564–4533; FAX (202) 501–0323; or via e-mail at *barnes.don@epa.gov.* Requests for oral comments must be in writing (e-mail preferred) and received by Dr. Barnes no later than noon Eastern Time on January 25, 2001.

2. Executive Committee—February 5–6, 2001

The U.S. EPA Science Advisory Board's (SAB's) Executive Committee will conduct a public meeting on Monday and Tuesday, February 5–6, 2001. The meeting will convene each day at 8:30 a.m. in Room 6013, U.S. Environmental Protection Agency, Ariel Rios Building, 1200 Pennsylvania Avenue, NW, Washington, DC 20460. The meeting will adjourn no later than 5 p.m. each day.

Purpose of the Meeting: At this meeting, the Executive Committee will receive updates from its committees and subcommittees concerning their recent and planned activities. As part of these updates, some committees will present draft reports for Executive Committee review and approval. We anticipate that the following report will be completed by the SAB Subcommittee involved and be ready for Executive Committee review at this meeting, however, to determine if this, or any other reports are under consideration at this meeting, please contact Ms. Diana Pozun at (202) 564–4544 or *pozun.diana@epa.gov.* Draft report(s) will appear on the Science Advisory Board website (*www.epa.gov/sab*) approximately two weeks prior to the meeting.

(a) Dioxin Reassessment Review Committee (DRRC) of the Science Advisory Board (SAB) ''Review of EPA's Draft Exposure and Human Health Reassessment of 2,3,7,8-Tetrachlorodibenzo-p-Dioxin (TCDD) and Related Compounds'' (see 65 FR 60190, dated October 10, 2000 for details).

As part of this two day meeting, the Executive Committee will also: (a) Meet with various Agency officials to discuss matters of mutual interest; (b) receive briefings from Agency staff on various topics; and (c) discuss future business of the Board including projects for FY2001.

Availability of Materials: The draft meeting agenda and drafts of any reports that will be reviewed at the meeting will be available to the public on the SAB website (http://www.epa.gov/sab) by close-of-business on January 22, 2001.

For Further Information: Any member of the public wishing further information concerning this meeting should contact Dr. Donald G. Barnes, Designated Federal Officer (DFO) for the Executive Committee at U.S. EPA Science Advisory Board (1400A), 1200 Pennsylvania Avenue NW., Washington, DC 20460; phone (202) 564–4533; fax (202) 501–0323; or via e-mail at <barnes.don@epa.gov>. Those wishing to submit brief oral comments should contact Dr. Barnes, *in writing,* no later than close of business January 29, 2001.

Providing Oral or Written Comments at SAB Meetings

It is the policy of the Science Advisory Board to accept written public comments of any length, and to accommodate oral public comments whenever possible. The Science Advisory Board expects that public statements presented at its meetings will not be repetitive of previously submitted oral or written statements. *Oral Comments:* In general, each individual or group requesting an oral presentation at a face-to-face meeting will be limited to a total time of ten minutes. For teleconference meetings, opportunities for oral comment will usually be limited to no more than three minutes per speaker and no more than fifteen minutes total. Deadlines for getting on the public speaker list for a meeting are given above. Speakers should bring at least 35 copies of their comments and presentation slides for distribution to the reviewers and public at the meeting. *Written Comments:* Although the SAB accepts written comments until the date of the meeting (unless otherwise stated), written

comments should be received in the SAB Staff Office at least one week prior to the meeting date so that the comments may be made available to the committee for their consideration. Comments should be supplied to the appropriate DFO at the address/contact information noted above in the following formats: one hard copy with original signature, and one electronic copy via e-mail (acceptable file format: WordPerfect, Word, or Rich Text files (in IBM–PC/Windows 95/98 format). Those providing written comments and who attend the meeting are also asked to bring 25 copies of their comments for public distribution.

General Information: Additional information concerning the Science Advisory Board, its structure, function, and composition, may be found on the SAB website (*http://www.epa.gov/sab*) and in The FY2000 Annual Report of the Staff Director which is available from the SAB Publications Staff at (202) 564–4533 or via fax at (202) 501–0256. Committee rosters, draft Agendas and meeting calendars are also located on our website.

Meeting Access: Individuals requiring special accommodation at this meeting, including wheelchair access to the conference room, should contact Dr. Barnes at least five business days prior to the meeting so that appropriate arrangements can be made.

Dated: January 11, 2001.

Donald G. Barnes,

Staff Director, Science Advisory Board.

[FR Doc. 01–1520 Filed 1–17–01; 8:45 am]

BILLING CODE 6560–50–P

ENVIRONMENTAL PROTECTION AGENCY

[0PP–60059; FRL–6762–9]

Notice of Receipt of Request for Cancellation of Registration of Bacillus thuringiensis (B.t.) subspecies tolworthi Cry9C and the Genetic Material Necessary for its Production in Corn

AGENCY: Environmental Protection Agency (EPA)

ACTION: Notice.

SUMMARY: In accordance with section 6(f)(1) of the Federal Insecticide, Fungicide, and Rodenticide Act (FIFRA), as amended, EPA is issuing a notice of receipt of a request by Aventis CropScience USA LP the sole U.S. registrant, to cancel their registration of *Bacillus thuringiensis* (B.t.) subspecies tolworthi Cry9C and the genetic material necessary for its production in corn.

DATES: Unless the request is withdrawn, the Agency will approve these use deletions and the deletions will become effective on February 20, 2001.

FOR FURTHER INFORMATION CONTACT: By mail: Phil Hutton, Biopesticides and Pollution Prevention Division, Office of Pesticide Programs (7511C), Environmental Protection Agency, 1200 Pennsylvania Ave., NW., Washington, DC 20460; telephone number: (703) 308–8260; e-mail address: hutton.phil@epa.gov.

SUPPLEMENTARY INFORMATION:

I. General Information

Section 6(f)(1) of FIFRA, provides that a registrant of a pesticide product may at any time request that any of its pesticide registrations be canceled. The Act further provides that, before acting on the request, EPA must publish a notice of receipt of any such request in the **Federal Register**. Thereafter, the Administrator may approve such a request.

II. Background

On May 12, 1998, EPA issued a registration to Plant Genetic Systems (America) Inc. for StarLink™ corn (original EPA Registration No. 70218–1). StarLink™ contains the active ingredient *Bacillus thuringiensis* subsp. tolworthi Cry9C protein and the genetic material necessary for its production in corn. EPA issued the registration, but restricted the use of the pesticide to field corn used for feed, industrial non-food uses, and seed increase because the Agency could not find that there was a reasonable certainty of no harm from its use in human food, based on a concern that the protein Cry9C could be allergenic. The Agency's assessment of Cry9C revealed that it has particular characteristics in common with known allergens: it is relatively heat stable and does not readily breakdown in simulated digestive fluids. This raises the possibility that it could be a human allergen. However, EPA determined that, notwithstanding its concern with respect to human ingestion of Cry9C, Cry9C was ''safe'' and when used as animal feed, would not present unreasonable risks to human health. Because the protein does not transfer to meat and poultry products, use in animal feed would not result in human dietary exposure to the protein/potential allergen.

On October 29, 1998, the StarLink™ corn registration was conveyed from Plant Genetic Systems (America) to AgrEvo USA. AgrEvo USA and Rhone Poulenc Ag Company subsequently formed Aventis CropScience USA LP (Aventis). As of February 22, 2000, the StarLink™ corn registration is now held by Aventis under registration number 264–669.

Test data from several sources demonstrate that StarLink™ corn was diverted into human food. Data from Aventis, Kraft Corporation, and the Food and Drug Administration confirmed the presence of Aventis' Cry9c DNA (the genetic material necessary for the production of Cry9C) in Taco Bell taco shells when tested using polymerase chain reaction (PCR) primers. The PCR primers used are unique to the Aventis *cry9c* gene.

III. Intent to Cancel Registration

This notice announces receipt by the Agency of an application from Aventis, to cancel the registration for StarLink™ corn (EPA Registration No. 264–669). The active ingredient in this product is *Bacillus thuringiensis* subsp. tolworthi Cry9C protein and the genetic material necessary for its production in corn.

The 30–day comment period will permit other interested members of the public to comment prior to the Agency's approval of the deletions. Users of this product who desire continued use should contact both the EPA contact person listed above, and the registrant at the following address: Dr. Sally Van Wert, Aventis CropScience, P.O. Box 12014, 2 T.W. Alexander Drive, Research Triangle Park, NC 27709; telephone: (919) 549–2379, to discuss withdrawal of the application for cancellation before February 20, 2001. It should be noted however, that this cancellation is being proposed because Aventis has failed to ensure that StarLink™ corn will not be diverted to human food, it is incumbent on any proponent of further use to demonstrate either: (1) That further use will not be diverted to human food, or (2) that StarLink™ corn is safe for human consumption because it will not present an unreasonable allergenic risk.

IV. Existing Stocks Provision

For the purpose of this notice, existing stocks are defined as those stocks of Cry9C corn grain and corn seed (EPA Registration No. 264–669) that exist before the date on which the registration of this product is canceled. Under section 6(a)(1), the Administrator may permit the continued sale or use of existing stocks of a pesticide whose registration has been canceled, if she determines that such sale or use would be consistent with the purposes of FIFRA (7 U.S.C. 136d(a)(1)). Sales of corn grain produced by farmers growing

StarLink™ corn or that corn in the required 660 foot buffer may only be sold or used for domestic animal feed or industrial non-food uses and cannot be sold for planting. No StarLink™ seed corn may be sold or distributed. Because of significant concerns regarding the potential for StarLink™ corn to enter the human food stream of commerce, the U.S. Department of Agriculture has undertaken an incentive program to ensure that all StarLink™ corn currently on the farm is either fed to livestock on the farm, or is directed only to domestic animal feed or industrial non-food uses.

This existing stocks disposition does not prohibit growers from using existing stocks of StarLink™ grain as animal feed. Nor will feeding animals StarLink™ corn render meat or milk derived from such animals adulterated. The existing tolerance exemption for the Cry9C protein and the genetic material necessary for its production, found at 40 CFR 180.1192, is not revoked by this Notice.

List of Subjects

Environmental protection, Pesticides and pests, Product registrations.

Dated: January 8, 2001.

Susan B. Hazen,

Deputy Director, Office of Pesticide Programs.

[FR Doc. 01–1522 Filed 1–17–01; 8:45 am]

BILLING CODE 6560–50–S

ENVIRONMENTAL PROTECTION AGENCY

[FRL–6933–9]

Implementation Guidance for Radionuclides

AGENCY: Environmental Protection Agency.

ACTION: Notice, request for comments on the draft radionuclides implementation guidance.

SUMMARY: The United States Environmental Protection Agency (EPA) published the final National Primary Drinking Water Regulation for Radionuclides on December 7, 2000, in the **Federal Register** (65 FR 76708). The EPA has also prepared the Draft Implementation Guidance for the Radionuclides Rule. This Notice is announcing the availability of this draft document and asking for comments from stakeholders and the public. These comments will be considered in developing the Final Implementation Guidance document. The EPA encourages the full participation of all stakeholders and the public throughout this process.

The Draft Implementation Guidance for the Radionuclides Rule is a comprehensive reference to assist States in implementing the Rule. The draft guidance was developed based on the Final Rule, with input and review from EPA Headquarters and Regional staff, and comments from States and the public on a previous version of the document. Along with summaries of the Rule and implementation timelines, the document contains: A detailed explanation of the rule requirements; guidance for violation determinations, and significant non-compliance definitions; Safe Drinking Water Information (SDWIS) reporting requirements; guidance for State primacy revision applications, and special primacy requirements; and a series of ''stand-alone'' fact sheet guidance materials for States and Public Water Systems. The guidance document describes the new standards for uranium, as well as the revisions to the radionuclides monitoring framework.

The Appendices to the document provide further information and tools to assist States and EPA Regional Offices with primacy revisions and Rule implementation, including: Violation tables to assist with compliance determination; a sample Extension Agreement between EPA and the States to document how implementation responsibilities will be shared if States do not submit a primacy applications by the deadline; a primacy revision crosswalk; a ''stand-alone'' State reporting guidance; rule training materials; and beta and photon emitter conversion tables.

DATES: Comments must be submitted on or before March 30, 2001.

ADDRESSES: Address all comments concerning this Notice to Ed Thomas, Office of Ground Water and Drinking Water (MC–4606), U.S. Environmental Protection Agency, 1200 Pennsylvania Avenue, NW., Washington, DC 20460. See **SUPPLEMENTARY INFORMATION** section for information to request a copy of the draft guidance and electronic addresses.

FOR FURTHER INFORMATION CONTACT: For general information related to the Radionuclides Rule, contact: Ed Thomas, at (202) 260–0910 or e-mail to *thomas.edwin@epamail.epa.gov.*

SUPPLEMENTARY INFORMATION: Copies of the draft guidance may be obtained by contacting the Safe Drinking Water Hotline at 800–426–4791, or at EPA's Office of Ground Water and Drinking Water's (OGWDW) Web Site: *http://www.epa.gov/safewater/rads/implement.html,* or by contacting Ed Thomas of OGWDW at (202) 260–0910 or by e-mail at *thomas.edwin@epamail.epa.gov.*

Cynthia C. Dougherty,

Director, Office of Ground Water and Drinking Water, Environmental Protection Agency.

[FR Doc. 01–1521 Filed 1–17–01; 8:45 am]

BILLING CODE 6560–50–P

FEDERAL DEPOSIT INSURANCE CORPORATION

Sunshine Act Meeting

Pursuant to the provisions of the ''Government in the Sunshine Act'' (5 U.S.C. 552b), notice is hereby given that the Federal Deposit Insurance Corporation's Board of Directors will meet in open session at 9:00 a.m. on Friday, January 19, 2001, to consider the following matters:

Summary Agenda: No substantive discussion of the following items is anticipated. These matters will be resolved with a single vote unless a member of the Board of Directors requests that an item be moved to the discussion agenda.

Summary reports, status reports, and reports of actions taken pursuant to authority delegated by the Board of Directors.

Memorandum and resolution re: Final Amendments to Part 308—Rules of Practice and Procedure, to implement the requirements of the Program Fraud Civil Remedies Act.

Memorandum re: Information Sharing and Confidentiality Agreement Pursuant to Section 307 of Gramm-Leach-Bliley Act.

Discussion Agenda: Memorandum and Resolution Re: Proposed Amendments to Part 325—Capital Standards for Nonfinancial Equity Investments.

The meeting will be held in the Board Room on the sixth floor of the FDIC Building located at 550—17th Street, N.W., Washington, D.C.

The FDIC will provide attendees with auxiliary aids (*e.g.*, sign language interpretation) required for this meeting. Those attendees needing such assistance should call (202) 416–2089 (Voice); (202) 416–2007 (TTY), to make necessary arrangements.

Requests for further information concerning the meeting may be directed to Mr. Robert E. Feldman, Executive Secretary of the Corporation, at (202) 898–6757.

Dated: January 12, 2001.

Federal Deposit Insurance Corporation.

Robert E. Feldman,

Executive Secretary.

[FR Doc. 01–1604 Filed 1–16–01; 10:58 pm]

BILLING CODE 6714–01–M

FEDERAL ELECTION COMMISSION

Sunshine Act Notice

AGENCY: Federal Election Commission

* * * * *

DATE & TIME: Tuesday, January 23, 2001 at 10 a.m.

PLACE: 999 E Street, NW., Washington, DC.

STATUS: This meeting will be closed to the public.

ITEMS TO BE DISCUSSED:

Compliance matters pursuant to 2 U.S.C. 437g.

Audits conducted pursuant to 2 U.S.C. 437g, 438(b), and Title 26, U.S.C.

Matters concerning participation in civil actions or proceedings or arbitration.

Internal personnel rules and procedures or matters affecting a particular employee.

* * * * *

DATE & TIME: Thursday, January 25, 2001 at 10 a.m.

PLACE: 999 E Street, NW., Washington, DC (Ninth Floor).

STATUS: This meeting will be open to the public.

ITEMS TO BE DISCUSSED:

Correction and Approval of Minutes.

Advisory Opinion 2000–40: Representative Jim McDermott.

Administrative Matters.

PERSON TO CONTACT FOR INFORMATION: Mr. Ron Harris, Press Officer, Telephone: (202) 694–1220.

Mary W. Dove,

Acting Secretary of the Commission.

[FR Doc. 01–1638 Filed 1–16–01; 2:12 pm]

BILLING CODE 6715–01–M

FEDERAL MARITIME COMMISSION

Notice of Agreement(s) Filed

The Commission hereby gives notice of the filing of the following agreement(s) under the Shipping Act of 1984. Interested parties can review or obtain copies of agreements at the Washington, DC offices of the Commission, 800 North Capitol Street, NW., Room 940. Interested parties may submit comments on an agreement to the Secretary, Federal Maritime Commission, Washington, DC 20573, within 10 days of the date this notice appears in the **Federal Register**.

Agreement No.: 011642–004.

Title: East Coast United States/East Coast of South America Vessel Sharing Agreement.

Parties: A.P. Moller-Maersk Sealand, P&O Nedlloyd Limited, P&O Nedlloyd B.V., Oceanica AGW Com. E Rep. Ltda., Compania Sud Americana de Vapores, S.A., Companhia Libra de Navegacao S.A., Alianca Navegacao e Logistica Ltda., Hamburg-Sud.

Synopsis: The proposed amendment: deletes Euroatlantic Container Line and Braztrans Transportes Maritimos Limitada as parties to the agreement; adds Companhia Libra de Navegacao S.A. as a party to the agreement; revises slot allocations; and reflects the various trade names used by certain parties.

Dated: January 12, 2001.

By Order of the Federal Maritime Commission.

Bryant L. VanBrakle,

Secretary.

[FR Doc. 01–1514 Filed 1–17–01; 8:45 am]

BILLING CODE 6730–01–P

FEDERAL MARITIME COMMISSION

Ocean Transportation Intermediary License; Reissuances

Notice is hereby given that the following Ocean Transportation Intermediary license has been reissued by the Federal Maritime Commission pursuant to section 19 of the Shipping Act of 1984, as amended by the Ocean Shipping Reform Act of 1998 (46 U.S.C. app. 1718) and the regulations of the Commission pertaining to the licensing of Ocean Transportation Intermediaries, 46 CFR part 515.

License No.	Name/address	Date reissued
4619N	Amad Corporation d/b/a Amad Forwarding Corporation, 3550 N.W. 33rd Street, Miami, FL 33142	November 8, 2000.

Sandra L. Kusumoto,

Director, Bureau of Consumer Complaints and Licensing.

[FR Doc. 01–1513 Filed 1–17–01; 8:45 am]

BILLING CODE 6730–01–P

FEDERAL MARITIME COMMISSION

Ocean Transportation Intermediary License; Revocations

The Federal Maritime Commission hereby gives notice that the following ocean transportation intermediary licenses have been revoked pursuant to section 19 of the Shipping Act of 1984 (46 U.S.C. app. 1718) and the regulations of the Commission pertaining to the licensing of Ocean Transportation Intermediaries, effective on the corresponding dates shown below:

License Number: 7404N.

Name: Apollo Forwarders, Inc.

Address: 509 First Street, Rodeo, CA 94572.

Date Revoked: November 15, 2000.

Reason: Failed to maintain a valid bond.

License Number: 4061F.

Name: Caribwrap Inc. d/b/a Five Star Forwarding.

Address: 8140 N.W. 74th Avenue, Suite #18, Miami, FL 33166.

Date Revoked: November 15, 2000.

Reason: Failed to maintain a valid bond.

License Number: 4550F.

Name: Cynthia A. Keefe d/b/a 'Round The World Exports.

Address: 213 Lynnhaven Drive, North Syracuse, NY 13212.

Date Revoked: November 19, 2000.

Reason: Failed to maintain a valid bond.

License Number: 7394N.

Name: Gateways International, Inc. d/b/a Bekins Wide World.

Address: 2030 First Avenue, Suite 200, Seattle, WA 98121–2112.

Date Revoked: November 18, 2000.

Reason: Failed to maintain a valid bond.

License Number: 2062N and 2062F.

Name: N. Abbe International, Inc.

Address: 2 World Trade Center, Suite 2844, New York, NY 10048

Date Revoked: October 18, 2000 and November 22, 2000.

Reason: Failed to maintain valid bonds.

License Number: 798R.

Name: Mary Morris Reid d/b/a Reid & Company.

Address: 150 Marine Street, Lake Charles, LA 70601.

Date Revoked: December 4, 2000.

Reason: Failed to maintain a valid bond.

License Number: 4292F.
Name: Satt International Forwarding Inc.
Address: 147–35 Farmers Blvd., Suite 202, Jamaica, NY 11434–5217.
Date Revoked: November 15, 2000.
Reason: Failed to maintain a valid bond.

License Number: 4351F.
Name: Shin Wha Park d/b/a Grand Bell Maritime, U.S.A.
Address: 623 E. Artesia Blvd., Carson, CA 90746.
Date Revoked: November 15, 2000.
Reason: Failed to maintain a valid bond.

License Number: 4574F.
Name: Zaky Transportation Services, Inc.
Address: 8600 N.W. 66th Street, Miami, FL 33166.
Date Revoked: November 18, 2000.
Reason: Failed to maintain a valid bond.

Sandra L. Kusumoto,
Director, Bureau of Consumer Complaints and Licensing.

[FR Doc. 01–1512 Filed 1–17–01; 8:45 am]

BILLING CODE 6730–01–P

FEDERAL RESERVE SYSTEM

Agency Information Collection Activities: Proposed Collection; Comment Request

AGENCY: Board of Governors of the Federal Reserve System

SUMMARY:

Background

On June 15, 1984, the Office of Management and Budget (OMB) delegated to the Board of Governors of the Federal Reserve System (Board) its approval authority under the Paperwork Reduction Act, as per 5 CFR 1320.16, to approve of and assign OMB control numbers to collection of information requests and requirements conducted or sponsored by the Board under conditions set forth in 5 CFR 1320 appendix A.1. Board-approved collections of information are incorporated into the official OMB inventory of currently approved collections of information. Copies of the OMB 83–Is and supporting statements and approved collection of information instruments are placed into OMB's public docket files. The Federal Reserve may not conduct or sponsor, and the respondent is not required to respond to, an information collection that has been extended, revised, or implemented on or after October 1, 1995, unless it displays a currently valid OMB control number.

Request for Comment on Information Collection Proposal

The following information collection, which is being handled under this delegated authority, has received initial Board approval and is hereby published for comment. At the end of the comment period, the proposed information collection, along with an analysis of comments and recommendations received, will be submitted to the Board for final approval under OMB delegated authority. Comments are invited on the following:

A. Whether the proposed collection of information is necessary for the proper performance of the Federal Reserve's functions; including whether the information has practical utility;

B. the accuracy of the Federal Reserve's estimate of the burden of the proposed information collection, including the validity of the methodology and assumptions used;

C. ways to enhance the quality, utility, and clarity of the information to be collected; and

D. ways to minimize the burden of information collection on respondents, including through the use of automated collection techniques or other forms of information technology.

DATES: Comments must be submitted on or before March 19, 2001.

ADDRESSES: Comments, which should refer to the OMB control number or agency form number, should be addressed to Jennifer J. Johnson, Secretary, Board of Governors of the Federal Reserve System, 20th and C Streets, NW., Washington, DC 20551, or mailed electronically to regs.comments@federalreserve.gov. Comments addressed to Ms. Johnson may be delivered to the Board's mail room between 8:45 a.m. and 5:15 p.m., and to the security control room outside of those hours. Both the mail room and the security control room are accessible from the courtyard entrance on 20th Street between Constitution Avenue and C Street, NW. Comments received may be inspected in room M–P–500 between 9 a.m. and 5 p.m., except as provided in section 261.14 of the Board's Rules Regarding Availability of Information, 12 CFR 261.14(a).

A copy of the comments may also be submitted to the OMB desk officer for the Board: Alexander T. Hunt, Office of Information and Regulatory Affairs, Office of Management and Budget, New Executive Office Building, Room 3208, Washington, DC 20503.

FOR FURTHER INFORMATION CONTACT: A copy of the proposed form and instructions, the Paperwork Reduction Act Submission (OMB 83–I), supporting statement, and other documents that will be placed into OMB's public docket files once approved may be requested from the agency clearance officer, whose name appears below. Mary M. West, Federal Reserve Board Clearance Officer (202–452–3829), Division of Research and Statistics, Board of Governors of the Federal Reserve System, Washington, DC 20551. Telecommunications Device for the Deaf (TDD) users may contact Diane Jenkins (202–452–3544), Board of Governors of the Federal Reserve System, Washington, DC 20551.

Proposal to Approve Under OMB Delegated Authority the Implementation of the Following Survey:

1. *Report Title:* Central Bank Survey of Foreign Exchange and Derivatives Market Activity.
Agency Form Number: FR 3036.
OMB Control Number: 7100–0285.
Frequency: one-time.
Reporters: Financial institutions that serve as intermediaries in the wholesale foreign exchange and derivatives market, dealers, and brokers.
Annual Reporting Hours: 9,458 hours.
Estimated Average Hours Per Response: Turnover survey: 50 hours; outstandings survey: 15 hours for FR 2436 reporters, 60 hours for non-FR 2436 reporters.
Number of Respondents: 161. Small businesses are not affected.
General Description of Report: This information collection is voluntary (12 U.S.C. 248(a), 353–359, and 461) and is given confidential treatment (5 U.S.C. 552(b)(4)).
Abstract: The survey is the latest in an ongoing series of surveys conducted by central banks every three years. The survey will be conducted in April and June of 2001 by the Federal Reserve Bank of New York. Data from the survey will provide information about the size and structure of the global markets for foreign exchange and financial derivatives transactions. The survey is part of a data collection effort conducted by over fifty other central banks and monetary authorities. The data will be useful to the Federal Reserve Board, other government agencies, and market participants for determining public policy relating to financial markets. Aggregate results from each central bank's survey will be provided to the Bank for International Settlements for the production of global market statistics.

Board of Governors of the Federal Reserve System, January 11, 2001.

Jennifer J. Johnson,
Secretary of the Board.

[FR Doc. 01–1437 Filed 1–17–01; 8:45 am]

BILLING CODE 6210–01–P

FEDERAL RESERVE SYSTEM

Change in Bank Control Notices; Acquisition of Shares of Bank or Bank Holding Companies

The notificants listed below have applied under the Change in Bank Control Act (12 U.S.C. 1817(j)) and § 225.41 of the Board's Regulation Y (12 CFR 225.41) to acquire a bank or bank holding company. The factors that are considered in acting on the notices are set forth in paragraph 7 of the Act (12 U.S.C. 1817(j)(7)).

The notices are available for immediate inspection at the Federal Reserve Bank indicated. The notices also will be available for inspection at the office of the Board of Governors. Interested persons may express their views in writing to the Reserve Bank indicated for that notice or to the offices of the Board of Governors. Comments must be received not later than January 31, 2001.

A. Federal Reserve Bank of Atlanta (Cynthia C. Goodwin, Vice President) 104 Marietta Street, N.W., Atlanta, Georgia 30303–2713:

1. Nancy Barr Dixon, Eufaula, Alabama; Michael Charles Dixon, Sr., Eufaula, Alabama; Hope Cotton Dixon, Eufaula, Alabama; Michael Charles Dixon, Jr., Eufaula, Alabama; Claudia Dixon Balkcom, Atlanta, Georgia; Heather Barr Dixon, Eufaula, Alabama; Marian Christine Dixon, Birmingham, Alabama; Rebecca Janie Mac Dixon, Auburn, Alabama; Robert Mack Dixon, Eufaula, Alabama; Mary Elliott Dixon, Eufaula, Alabama; Mary Clayton Dixon, Eufaula, Alabama; Eric Ross Fenichel, Atlanta, Georgia; Janie Dixon King, Eufaula, Alabama; William Daniel King, Eufaula, Alabama; Robert Mack Dixon, Jr., Eufaula, Alabama; Preston Copeland Dixon, Birmingham, Alabama; James Franklin Dixon, III, Birmingham, Alabama; Rita Hallett Dixon, Birmingham, Alabama; Thomas Seay Lawson, Jr., Montgomery, Alabama; Sarah Clayton Lawson, Montgomery, Alabama; and Preston Copeland Clayton, Jr., Eufaula, Alabama; all to retain voting shares of Eufaula BancCorp, Inc., Eufaula, Alabama, and thereby indirectly retain voting shares of Southern Bank of Commerce, Eufaula, Alabama, and First American Bank of Walton County, Santa Rosa Beach, Florida.

Board of Governors of the Federal Reserve System, January 11, 2001.

Robert deV. Frierson,

Associate Secretary of the Board.

[FR Doc. 00–1434 Filed 1–17–01; 8:45 am]

BILLING CODE 6210–01–S

FEDERAL RESERVE SYSTEM

Formations of, Acquisitions by, and Mergers of Bank Holding Companies

The companies listed in this notice have applied to the Board for approval, pursuant to the Bank Holding Company Act of 1956 (12 U.S.C. 1841 et seq.) (BHC Act), Regulation Y (12 CFR Part 225), and all other applicable statutes and regulations to become a bank holding company and/or to acquire the assets or the ownership of, control of, or the power to vote shares of a bank or bank holding company and all of the banks and nonbanking companies owned by the bank holding company, including the companies listed below.

The applications listed below, as well as other related filings required by the Board, are available for immediate inspection at the Federal Reserve Bank indicated. The application also will be available for inspection at the offices of the Board of Governors. Interested persons may express their views in writing on the standards enumerated in the BHC Act (12 U.S.C. 1842(c)). If the proposal also involves the acquisition of a nonbanking company, the review also includes whether the acquisition of the nonbanking company complies with the standards in section 4 of the BHC Act (12 U.S.C. 1843). Unless otherwise noted, nonbanking activities will be conducted throughout the United States. Additional information on all bank holding companies may be obtained from the National Information Center website at www.ffiec.gov/nic/.

Unless otherwise noted, comments regarding each of these applications must be received at the Reserve Bank indicated or the offices of the Board of Governors not later than February 9, 2001.

A. Federal Reserve Bank of Richmond (A. Linwood Gill, III, Vice President) 701 East Byrd Street, Richmond, Virginia 23261–4528:

1. First Bancorp, Troy, North Carolina; to merge with Century Bancorp, Inc., Thomasville, North Carolina, and thereby indirectly acquire voting shares of Home Savings, Inc., SSB, Thomasville, North Carolina.

B. Federal Reserve Bank of Chicago (Phillip Jackson, Applications Officer) 230 South LaSalle Street, Chicago, Illinois 60690–1414:

1. American Bancorporation, Cedar Falls, Iowa; to become a bank holding company by acquiring 100 percent of the voting shares of The Newburg Corporation, Saint Ansgar, Iowa, and thereby indirectly acquire voting shares of Cedar Valley State Bank, Saint Ansgar, Iowa.

Board of Governors of the Federal Reserve System, January 11, 2001.

Robert deV. Frierson,

Associate Secretary of the Board.

[FR Doc. 00–1435 Filed 1–17–01; 8:45 am]

BILLING CODE 6210–01–S

FEDERAL RESERVE SYSTEM

Notice of Proposals to Engage in Permissible Nonbanking Activities or to Acquire Companies that are Engaged in Permissible Nonbanking Activities

The companies listed in this notice have given notice under section 4 of the Bank Holding Company Act (12 U.S.C. 1843) (BHC Act) and Regulation Y (12 CFR Part 225) to engage *de novo*, or to acquire or control voting securities or assets of a company, including the companies listed below, that engages either directly or through a subsidiary or other company, in a nonbanking activity that is listed in § 225.28 of Regulation Y (12 CFR 225.28) or that the Board has determined by Order to be closely related to banking and permissible for bank holding companies. Unless otherwise noted, these activities will be conducted throughout the United States.

Each notice is available for inspection at the Federal Reserve Bank indicated. The notice also will be available for inspection at the offices of the Board of Governors. Interested persons may express their views in writing on the question whether the proposal complies with the standards of section 4 of the BHC Act. Additional information on all bank holding companies may be obtained from the National Information Center website at www.ffiec.gov/nic/.

Unless otherwise noted, comments regarding the applications must be received at the Reserve Bank indicated or the offices of the Board of Governors not later than January 31, 2001.

A. Federal Reserve Bank of Chicago (Phillip Jackson, Applications Officer) 230 South LaSalle Street, Chicago, Illinois 60690–1414:

1. Northwest Suburban Bancorp, Inc., Mount Prospect, Illinois; to engage *de novo* in purchasing loan participations from its subsidiary banks, pursuant to § 225.28(b)(1) of Regulation Y.

Board of Governors of the Federal Reserve System, January 11, 2001.

Robert deV. Frierson,

Associate Secretary of the Board.

[FR Doc. 00–1436 Filed 1–16–01; 8:45 am]

BILLING CODE 6210–01–S

FEDERAL RESERVE SYSTEM

Notice of Proposals To Engage in Permissible Nonbanking Activities or To Acquire Companies That Are Engaged in Permissible Nonbanking Activities

The companies listed in this notice have given notice under section 4 of the Bank Holding Company Act (12 U.S.C. 1843) (BHC Act) and Regulation Y, (12 CFR Part 225) to engage de novo, or to acquire or control voting securities or assets of a company, including the companies listed below, that engages either directly or through a subsidiary or other company, in a nonbanking activity that is listed in § 225.28 of Regulation Y (12 CFR 225.28) or that the Board has determined by Order to be closely related to banking and permissible for bank holding companies. Unless otherwise noted, these activities will be conducted throughout the United States.

Each notice is available for inspection at the Federal Reserve Bank indicated. The notice also will be available for inspection at the offices of the Board of Governors. Interested persons may express their views in writing on the question whether the proposal complies with the standards of section 4 of the BHC Act. Additional information on all bank holding companies may be obtained from the National Information Center website at www.ffiec.gov/nic/.

Unless otherwise noted, comments regarding the applications must be received at the Reserve Bank indicated or the offices of the Board of Governors not later than February 1, 2001.

A. Federal Reserve Bank of Kansas City (D. Michael Manies, Assistant Vice President) 925 Grand Avenue, Kansas City, Missouri 64198–0001:

1. First Ainsworth Company, Ainsworth, Nebraska; to engage in extending credit and servicing loans pursuant to § 225.28(b)(1) of Regulation Y.

Board of Governors of the Federal Reserve System, January 12, 2001.

Robert deV. Frierson,

Associate Secretary of the Board.

[FR Doc. 01–1523 Filed 1–17–01; 8:45 am]

BILLING CODE 6210–01–P

FEDERAL RESERVE SYSTEM

Sunshine Act Meeting

Agency Holding the Meeting: Board of Governors of the Federal Reserve System.

TIME AND DATE: 11:00 a.m., Monday, January 22, 2001.

PLACE: Marriner S. Eccles Federal Reserve Board Building, 20th and C Streets, N.W., Washington, D.C. 20551

STATUS: Closed

MATTERS TO BE CONSIDERED:

1. Personnel actions (appointments, promotions, assignments, reassignments, and salary actions) involving individual Federal Reserve System employees.

2. Any items carried forward from a previously announced meeting.

CONTACT PERSON FOR MORE INFORMATION: Lynn S. Fox, Assistant to the Board; 202–452–3204.

SUPPLEMENTARY INFORMATION: You may call 202–452–3206 beginning at approximately 5 p.m. two business days before the meeting for a recorded announcement of bank and bank holding company applications scheduled for the meeting; or you may contact the Board's Web site at http://www.federalreserve.gov for an electronic announcement that not only lists applications, but also indicates procedural and other information about the meeting.

Dated: January 12, 2001.

Robert deV. Frierson,

Associate Secretary of the Board.

[FR Doc. 01–1573 Filed 1–12–01; 4:17 pm]

BILLING CODE 6210–01–P

DEPARTMENT OF HEALTH AND HUMAN SERVICES

Centers for Disease Control and Prevention

[Program Announcement 01017]

National Partnerships for Human Immunodeficiency Virus (HIV) Prevention With a Focus on Business and Labor, Youth-at-High Risk, and Migrant Workers; Notice of Availability of Funds

A. Purpose

The Centers for Disease Control and Prevention (CDC) announces the availability of fiscal year (FY) 2001 funds for a cooperative agreement program for National Partnerships for Human Immunodeficiency Virus (HIV) Prevention. This program addresses the ''Healthy People 2010'' focus areas of HIV Educational and Community-Based Programs, and Sexually Transmitted Diseases. For a conference copy of ''Healthy People 2010'', visit the internet site:

http://www.health.gov/healthypeople.

The purpose of the program is to develop local, regional, State, and national leadership and support for HIV prevention programs and policies, and to provide technical assistance and service delivery in support of capacity building and skills development for Community-based organizations (CBOs), State and local health departments, and other organizations conducting HIV prevention activities at the local, regional, state, and national levels. This announcement is intended to help address gaps in leadership and technical assistance in the development and delivery of HIV prevention services.

For the purpose of this announcement the following definitions apply:

Leadership activities are defined as the development of communication and mobilization strategies including network development, partnership formation and coalition building, to raise and maintain community, as well as national awareness of HIV prevention needs and programs in specified populations. Leadership activities may also include developing and implementing strategies for needs assessments, policy analysis and service integration in collaboration with the private sector, federal partners, health departments, CBOs and Community planning groups (CPGs).

Technical assistance activities are defined as the provision of information and skills, consultation and training for individuals and organizations to improve the delivery and effectiveness of HIV prevention interventions. Service delivery activities may also be included under the technical assistance activity. Technical assistance funds available under this announcement must support assistance that improves the capacity of recipient agencies to design, develop, implement, and/or evaluate effective HIV prevention interventions for one or more of the three populations described below.

B. Eligible Applicants

To be eligible for funding under this announcement, applicants must be (1) a tax-exempt, non-profit national business or labor related, youth related, or migrant worker related organization; or (2) an academic institution working in a contractual relationship with a community-based partner; or (3) a federally recognized Indian tribal government, a non-federally recognized tribe or other organization that qualifies under the Indian Civil Rights Act, State Charter Tribes, Urban Indian Health Programs, Indian Health Boards, and/or Inter-Tribal Councils.

If you are applying to conduct activities internationally, you must demonstrate having at least two years of experience conducting leadership or

technical assistance activities in an international setting.

Indian Tribal governments, non-federally recognized tribes and other organizations that qualify under the Indian Civil Rights Act, State Charter Tribes, Urban Indian Health Programs, Indian Health Boards, and Inter-Tribal Councils may apply under each category provided that these entities meet the eligibility criteria described under each category.

Proof of non-profit tax-exempt status must be provided with the application. CDC will not accept an application without proof of tax-exempt status. Non-profit tax-exempt status is determined by the Internal Revenue Service (IRS) Code, Section 501(c)(3). Tax-exempt status may be proved by providing a current copy of the 501(c)(3) non-profit tax-exempt of the current IRS Determination Letter.

Note: Public Law 104–65 states that an organization described in section 501(c)(4) of the Internal Revenue Code of 1986 that engages in lobbying activities is not eligible to receive Federal funds constituting an Federal funds constituting an award, grant, cooperative agreement, contract, loan, or any other form. Below is additional eligibility criteria for each category.

Category I—Business- or Labor-Related Organization Programs

A. A business- or labor-related organization is a professional or voluntary organization, that (1) has businesses, business leaders, or labor leaders as a focus or constituency; or (2) is a labor union; or (3) is a trade association. In addition, the organization (4) has a formal or informal network, chapters, affiliates, constituent organizations, or offices in at least two U.S. States or territories; and (5) has access to or relationships with national or regional corporate, business, union, or labor leaders and managers (*e.g.,* human resource managers). For example, a labor union with chapters in at least two States would meet the definition of a national business- or labor-related organization, whereas an individual State chapter of a national labor union would not.

B. Has a documented two year record of providing technical assistance or leadership activities focusing on HIV prevention with business and labor organizations and their employees or members.

Category II—Youth-Related Organization Programs

A. A youth-related organization is an organization that has youth, and/or service providers who work with youth, as a focus or constituency. The organization must have a formal or informal network, chapters, affiliates, constituent organizations, or offices in at least two U.S. States or territories. For example, an agency with a linked network of youth-serving providers with members residing in at least 2 States or Territories would meet the definition of a youth-related organization, whereas an individual chapter of a national organization would not.

B. Has a documented two year record of providing technical assistance, prevention services and/or leadership activities focusing on HIV prevention for Gay, Lesbian, Bisexual, Transgender and Questioning (GLBTQ) youth, homeless/run-away or street youth, and/or young women of color.

C. Has a young person, age 24 or younger from the target population, on the Board of Directors that oversees programmatic activities, or has an Advisory Committee to the Board of Directors that is made up of young people age 24 or younger from the target population.

Category III—Migrant Worker-Related Programs

A. A migrant worker-related organization is an organization that has migrant workers and/or the service providers who work with migrant workers, as a focus or constituency. The organization must have a formal or informal network, chapters, affiliates, constituent organizations, or offices in at least two U.S. States or territories. For example, an agency with a linked network of migrant worker-serving providers with members residing in at least two States or Territories would meet the definition of a migrant farmworker-related organization, whereas an individual chapter of a national organization would not.

B. Has a documented two year record of providing culturally tailored technical assistance or leadership activities focusing on HIV prevention for migrant workers.

C. Availability of Funds

Approximately $2.2 million is available in FY 2001 to fund approximately 9 awards. It is expected that the average award will be $225,000 ranging from $200,000 to $300,000. It is expected that the awards will begin on or about April 1, 2001, and will be made for a 12-month budget period within a project period of up to four years. Funding estimates may change.

Continuation awards within an approved project period will be made on the basis of satisfactory progress as evidenced by required reports, satisfactory site visits and the availability of funds.

Applicants may apply for funding in up to two categories, and within each category applicants may apply for one or both of the two activities, as defined in the section on ''Recipient Activities''. A separate application package and budget must be submitted for EACH category.

1. Category I—Business- or Labor-related Organization Programs up to three awards, including:

—Up to two that address Activity A (Leadership Activities); and
—Up to two that address Activity B (Technical Assistance Activities).

2. Category II—Youth-related Organization Programs up to three awards, including:

—Up to two that address Activity A (Leadership Activities), and
—Up to two that address Activity B (Technical Assistance Activities).

3. Category III—Migrant Farmworker-related Programs up to three awards, including:

—Up to two that address Activity A (Leadership Activities), and
—Up to two that address Activity B (Technical Assistance Activities).

Use of Funds

1. Funds available under this announcement must support activities that engage and develop their constituent communities for the purpose of increasing awareness, leadership, participation, and support for HIV prevention and/or increase the ability of organizations to design, develop, implement, and evaluate effective HIV prevention interventions.

2. These Federal funds may not supplant or duplicate existing funding for these activities.

3. The applicant must perform a substantial portion of the program activities and cannot serve merely as a fiduciary agent. Applications requesting funds to support only managerial and administrative functions will not be accepted.

4. No funds will be provided for direct patient care, including substance abuse treatment, medical treatment, or medications.

5. Before using funds awarded through this cooperative agreement to develop HIV prevention materials, recipients must check with the CDC National Prevention Information Network (NPIN) to determine if suitable materials are already available. Also, materials developed by recipients must be made available for dissemination through the CDC NPIN. Successful applicants will be contacted by NPIN for

information on program resources for use in referrals and resource directories. Also, grantees should send three copies of all educational materials developed under this cooperative agreement to NPIN for inclusion in NPIN's databases.

Funding Preferences

Preference for funding in all categories will be given to:

1. Ensuring that leadership development and/or technical assistance is available to the designated target populations as a primary focus; and

2. Addressing gaps in current national/regional or local technical assistance services (gaps may be defined by geography; target population, race/ethnicity, risk behavior; or intervention type).

3. Ensuring that technical assistance activities will address a variety of intervention types (*e.g.,* small group intervention, counseling and testing, prevention case management) and strategies or programs that raise awareness about HIV.

4. Ensuring that technical assistance activities will address diverse target population groups.

Additional Funding Preference for Category I—Business and Labor:

Preference for funding will be given to ensuring that both business and labor organizations are funded in at least one of the two designated activities.

D. Program Requirements

In conducting activities to achieve the purpose of this program, the recipient will be responsible for the activities under 1. (Recipient Activities), and CDC will be responsible for the activities listed under 2. (CDC Activities).

1. Recipients in All Categories Must Conduct the Following Activities

a. Incorporate cultural competency and linguistic appropriateness into all technical assistance and skills building efforts, including those involving the development, production, dissemination, and marketing of health communication or prevention messages;

b. Use epidemiologic data, behavioral research, and program evaluation, to inform technical assistance and intervention development which meet the needs of the designated populations;

c. Coordinate program activities with relevant public sector partners, including national, regional, State, and local HIV prevention programs and Capacity Building Assistance (CBA) providers to prevent duplication of efforts. (Please see Attachment III for a list of the Division of HIV/AIDS Prevention Capacity-Building and Technical Assistance Providers. Also, see Section G. ''Submission and Deadline'' for online availability of complete program announcement, attachments, and forms);

d. Review and ensure consistency with applicable State and local comprehensive HIV prevention community plans when conducting program activities at the State and local levels;

e. Facilitate the dissemination of successful prevention interventions and program models through meetings, workshops, conferences, and communications with project officers;

f. Compile ''lessons learned'' from the project and share these with the CDC;

g. Monitor and conduct process evaluations on all major program activities and services supported with CDC HIV prevention funds under this cooperative agreement;

h. Submit CDC forms for initiating and completing technical assistance services. Forms will be provided by CDC.

2. Category I—Business- or Labor-Related Organization Programs—Recipient Activities

a. Activity A—Leadership Activities

(1) Develop and promote, at the national, State, and local levels, and when appropriate, at the international level, leadership in and support for HIV prevention policies and strategies, that promote private-public partnerships to enhance HIV/AIDS awareness and prevention;

(2) Influence and strengthen, at the national, State, and local levels, and when appropriate, international level, private sector engagement in shaping societal and community norms that dispel HIV/AIDS stigma, reduce discrimination against persons with HIV/AIDS, and facilitate HIV prevention by encouraging the adoption and maintenance of safer behaviors;

(3) Support the private sector development of policies and programs addressing HIV/AIDS and HIV prevention education in the workplace, at the national, State, regional, local, and when appropriate, international levels.

b. Activity B—Technical Assistance Activities

(1) Provide businesses and business- and labor-related organizations with technical assistance related to:

- Adopting and implementing appropriate CDC-recommended policies on HIV/AIDS in the workplace
- Educating managers and labor leaders about these policies
- Educating workers about HIV/AIDS in the workplace
- Educating workers and their families about HIV prevention, and
- Contributing to community efforts to control HIV transmission;

(2) Facilitate State and local HIV prevention community planning groups, health departments, CBOs, and other HIV prevention providers in working with business, labor, and business-and labor-related organizations to strengthen and promote HIV prevention efforts in the community;

(3) Facilitate business, labor and business-and labor-related organizations in working with State and local HIV prevention community planning groups, health departments, CBOs, and other HIV prevention providers to strengthen and promote HIV prevention efforts in the community.

These services are to be provided through the use of information transfer, skills building, technical consultation, technical services, and technology transfer. These services should be culturally appropriate and based in science.

(4) Implement a plan for developing and maintaining ongoing technical assistance and service delivery collaboration with CDC-funded CBOs, other CBOs, and State and local Health Departments.

(5) Implement a system that responds to technical assistance and service delivery requests. The system must include mechanisms for assessing and prioritizing requests; linking requests to other technical assistance and service resources and to services provided by other Technical Assistance providers.

(6) Identify and complement the technical assistance and service delivery efforts for the target population available locally. Cooperate with other national, regional, State, and local technical assistance and service providers to (a) avoid duplication of effort and (b) ensure that capacity-building assistance is allocated according to gaps in available services and the needs of organizations serving youth at high risk for acquiring and transmitting HIV and other STDs.

(7) Coordinate program activities with appropriate national, regional, State, and local governmental and non-governmental HIV prevention partners (*e.g.,* health departments, CBOs and CPGs). (Note: For this announcement, the term ''coordinate'' means exchanging information and altering activities for mutual benefit.)

(8) Incorporate cultural competency, age, linguistic and educational appropriateness into all capacity-building activities;

3. Category II—Youth-Related Organization Programs—Recipient Activities

a. Activity A—Leadership

(1) Develop and promote, at the national, State, and local levels, and when appropriate, at the international level, leadership support for HIV prevention policies, programs and services for HIV prevention for young women of color; homeless, run-away and/or street youth; and/or Gay, Lesbian, Bisexual, Transgender and Questioning (GLBTQ) youth;

(2) Influence and strengthen, at the national, State, and local levels, and when appropriate, at the international level, societal and community norms that dispel HIV/AIDS stigma, reduce discrimination against persons with HIV/AIDS, and facilitate HIV prevention by supporting the adoption and maintenance of safer behaviors in youth.

b. Activity B—Technical Assistance

1. Include CDC-funded CBOs, other CBOs, Health Department staff, State education agencies, and other potential consumers of the proposed services in planning and evaluating the proposed technical assistance and service delivery program.

2. Ensure the effective and efficient provision of technical assistance and/or delivery of effective services to address HIV prevention for the designated youth populations. (Examples include, but are not limited to, intervention replication or adaptation, use of behavioral and social sciences to increase intervention effectiveness, increasing the cultural competence and linguistic appropriateness of interventions, service integration, developing effective health communications messages, conducting population-based needs assessments, and evaluation planning and implementation.) Recipients should work closely with CDC to identify interventions for the designated youth populations that have a sound basis in science or proven program experience and are suitable for dissemination.

For a compilation of intervention types (*e.g.* small group interventions, counseling and testing, prevention case management) and other proven interventions please refer to the CDC Compendium of Effective Programs, titled, ''Compendium of HIV Prevention Interventions with Evidence of Effectiveness'' November 1999, CDC Prevention Research Synthesis to reach the designated population (*e.g.* young women of color, GLBTQ youth, runaway, homeless, or street youth). The ''Compendium of HIV Prevention Interventions with Evidence of Effectiveness'' may be found in Attachment II and on the CDC home page Internet address. (See Section G. ''Submission and Deadline'' for online availability of complete program announcement, attachments, and forms).

These services are to be provided through the use of information transfer, skills building, technical consultation, technical services, and technology transfer. These services should be culturally appropriate and based in science.

3. Implement a plan for developing and maintaining ongoing technical assistance and service delivery collaboration with CDC-funded CBOs, other CBOs, and State and local Health Departments.

4. Implement a system that responds to technical assistance and service delivery requests. The system must include mechanisms for assessing and prioritizing requests; linking requests to other technical assistance and service resources and to services provided by other Technical Assistance providers.

5. Identify and complement the technical assistance and service delivery efforts for the target population available locally. Cooperate with other national, regional, State, and local technical assistance and service providers including Capacity Building Assistance (CBA) providers, to (a) avoid duplication of effort and (b) ensure that capacity-building assistance is allocated according to gaps in available services and the needs of organizations serving youth at high risk for acquiring and transmitting HIV and other STDs.

6. Coordinate program activities with appropriate national, regional, State, and local governmental and non-governmental HIV prevention partners (*e.g.,* health departments, CBOs, CBA providers) and CPGs.

(**Note:** For this announcement, the term ''coordinate'' means exchanging information and altering activities for mutual benefit.)

7. Incorporate cultural competency, age, linguistic and educational appropriateness into all capacity-building activities;

8. Assist State and local HIV prevention community planning groups, health departments, CBOs, and other HIV prevention providers in working with youth and youth serving organizations to strengthen and promote HIV prevention among youth in the community.

9. Assist youth serving organizations in working with State and local HIV prevention community planning groups, health departments, CBOs, and other HIV prevention providers to strengthen and promote HIV prevention among youth in the community.

10. Participate in the CDC-coordinated Capacity-Building Assistance Network to enhance communication, coordination, and training.

4. Category III—Migrant Worker-Related Programs—Recipient Activities

a. Activity A—Leadership

1. Develop and promote, at the national, State, regional and local levels, and when appropriate, at the international level, leadership support for HIV prevention policies, programs and services for HIV prevention for migrant workers.

2. Influence and strengthen, at the national, State, and local levels, and when appropriate, at the international level, societal and community norms that dispel HIV/AIDS stigma, reduce discrimination against migrant workers with HIV/AIDS, and facilitate HIV prevention by supporting the adoption and maintenance of safer behaviors in migrant workers.

b. Activity B—Technical Assistance

1. Include CDC-funded CBOs, other CBOs, Health Department staff, State education agencies, and other potential consumers of the proposed services in planning and evaluating the proposed technical assistance and service delivery program.

2. Ensure the effective and efficient provision of technical assistance and/or delivery of effective services to address HIV prevention for migrant workers.

(Examples include, but are not limited to, intervention replication or adaptation, use of behavioral and social sciences to increase intervention effectiveness, increasing the cultural competence and linguistic appropriateness of interventions, service integration, developing effective health communications messages, conducting population-based needs assessments, and evaluation planning and implementation.) Recipients should work closely with CDC to identify interventions for the migrant worker population that have a sound basis in science or proven program experience and are suitable for dissemination.

These services are to be provided through the use of information transfer, skills building, technical consultation, technical services, and technology transfer. These services should be culturally and linguistically appropriate and based in science.

3. Implement a plan for developing and maintaining ongoing technical assistance and service delivery

collaboration with CDC-funded CBOs, other CBOs, and State and local Health Departments.

4. Implement a system that responds to requests for technical assistance and service delivery. The system must include mechanisms for assessing and prioritizing requests; linking requests to other technical assistance and service resources and to services provided by other Technical Assistance providers.

5. Identify and complement the technical assistance and service delivery efforts for the target population available locally. Cooperate with other national, regional, State, and local technical assistance and service providers to (a) avoid duplication of effort, and (b) ensure that technical assistance is allocated according to gaps in available services and the needs of organizations serving migrant workers at risk for acquiring and transmitting HIV and other STDs.

6. Coordinate program activities with appropriate national, regional, State, and local governmental and non-governmental HIV prevention partners (*e.g.,* health departments, CBOs, CBA providers), other technical assistance providers and CPGs. (Note: For this announcement, the term ''coordinate'' means exchanging information and altering activities for mutual benefit.)

7. Incorporate cultural and linguistic competency, and educational appropriateness into all technical assistance and prevention activities;

8. Assist State and local HIV prevention community planning groups, health departments, CBOs, and other HIV prevention providers in working with migrant workers and/or organizations serving migrant workers to strengthen and promote HIV prevention among this community.

9. Assist migrant serving organizations in working with State and local HIV prevention community planning groups, health departments, CBOs, and other HIV prevention providers to strengthen and promote HIV prevention among youth in the community.

2. CDC Activities

a. Serve as the coordinator for technical assistance and service provision as part of CDC's overall capacity-building programs and network by ensuring coordination and collaboration with other capacity building and technical assistance providing grantees.

b. Provide consultation to recipients regarding planning, developing, implementing and evaluating technical assistance services. CDC will provide consultation and assistance and may also employ contractors; national, regional, and local organizations; and peer-to-peer assistance from CDC-funded partners.

c. Provide up-to-date scientific information on the risk factors for HIV infection, prevention measures, and program strategies for the prevention of HIV infection. Work closely with recipients to identify interventions that have a sound basis in science or proven program experience and are suitable for dissemination.

d. Facilitate and promote collaboration through the exchange of program information, coalition maintenance strategies, and technical assistance/capacity-building assistance among CBOs; State and local health departments; HIV prevention community planning Groups; national, regional, and local organizations; and other HIV prevention partners.

e. Support train-the-trainer opportunities that enhance capacity-building/technical assistance delivery systems.

f. Facilitate and collaborate in the dissemination of successful capacity-building/technical assistance strategies and successful innovations through meetings of grantees, workshops, and conferences.

g. Collaborate with recipients to standardize a system for tracking and reporting all technical assistance requests and delivery.

h. Coordinate an evaluation of the overall assistance program.

E. Application Content for All Applicants

Use the information in the Program Requirements, Other Requirements, and Evaluation Criteria sections to develop the application content. Your application will be evaluated on the evaluation criteria listed, so it is important to follow them in laying out your application. The narrative should be no more than 40 double-spaced pages (excluding the budget and attachments). Number each page, including appendices and attachments sequentially and provide a complete ''Table of Contents'' to the application and its attachments. Please begin each separate section of the application on a new page. The original and each copy of the application set must be submitted unstapled and unbound.

All material must be typewritten with a font of 10 pitch or 12 point on 8½″ by 11″ paper, with at least 1″ margins, headings and footers; and printed on one side only. Materials which should be part of the basic plan will not be accepted if placed in the attachments. Attachments should be unbound and printed in black and white.

In developing the application, follow the format and instructions outlined below.

1. Proof of Eligibility

Include documents as specified below as proof of eligibility. Applicants must complete this section. Failure to provide the required documentation will result in your application being disqualified and returned to you without further review.

a. Indicate if your organization is a national, regional or local organization. Attach the specific charge from your organization's Articles of Incorporation, Bylaws, or a resolution from its executive board or governing body to operate nationally, regionally (in multiple states or territories), or internationally and proof of informal networks which allows your organization to work in multiple states and/or regions.

b. Indicate if your organization is (1) business or labor related, or a labor union/trade association, (2) youth related, (3) migrant worker related, (4) an academic institution working in a contractual relationship with a community-based partner or (5) a federally recognized Indian tribal government or a non-federally recognized tribe or other organization that qualifies under the Indian Civil Rights Act, State Charter Tribe, Urban Indian Health Program, Indian Health Board, or Inter-Tribal Council.

c. Does your organization have a currently valid 501(c)(3) non-profit tax-exempt status? Attach to this section a copy of the current, valid Internal Revenue Service (IRS) determination letter of your organization's 501(c)(3) non-profit tax-exempt status.

If you are applying as an academic institution: Include a ''Memoranda of Understanding'' which provides a detailed description and time-line of the activities to be conducted by the community-based partner with which you are contracting.

If you are applying to conduct international activities: Include documented evidence which demonstrates that you have at least two years of experience conducting leadership or technical assistance activities in an international setting.

If your organization conducts Business-or Labor-related programs:

(a) Submit documentation proving that your organization has businesses, business leaders, or labor leaders as a focus or constituency: or (1) is a labor union; or (2) is a trade association. In addition, the organization (3) has a

formal or informal network, chapters, affiliates, constituent organizations, or offices in at least two U.S. States or territories; and (4) has access to national or regional corporate, business, union, or labor leaders and managers (e.g., human resource managers).

(b) Submit the following documents to demonstrate that your organization has a two year record of providing technical assistance, conducting leadership activities focusing on HIV prevention with business and labor organizations and their employees or members and/or delivering HIV prevention services: (1) Attach to this section a list of clients, including the organization name, location (i.e., city and State), dates of service, and type(s) of assistance provided, (2) Provide copies of memoranda of understanding, agreements, or contracts and/or consultants, (3) training agendas, (4) newspaper articles, (5) correspondence from recipients of assistance, (6) program brochures, (7) extracts from previous grants to support comparable activities.

If your organization conducts youth-related programs:

(a) Submit documentation demonstrating that your organization has a formal or informal network, chapters, affiliates, constituent organizations, or offices in at least two U.S. States or territories.

(b) Attach the following documents as evidence that your organization has a two year record of providing technical assistance, conducting leadership activities focusing on HIV prevention for youth and/or delivering HIV prevention services: (1) Attach to this section a list of clients, including the organization name, location (i.e., city and State), dates of service, and type(s) of assistance provided, (2) Provide copies of memoranda of understanding, agreements, or contracts/consultants, (3) training agendas, (4) newspaper articles, (5) correspondence from recipients of assistance, (6) program brochures, (7) extracts from previous grants to support comparable activities.

(c) Attach a complete list of the members of your board, governing body or advisory committee along with their positions on the board, age and gender as evidence that a person age 24 or younger participates on the Board that oversees programmatic activities, or that your organization has an Advisory Committee to the Board that is made up of young people age 24 or younger.

If your organization conducts Migrant Worker-related programs:

(a) Submit evidence of having a formal or informal network, chapters, affiliates, constituent organizations, or offices in at least two U.S. States or territories.

(b) Attach the following documents as evidence that your organization has a documented two year record of providing culturally tailored technical assistance, conducting leadership activities focusing on HIV prevention for migrant workers and/or delivering HIV prevention services: (1) Attach to this section a list of clients, including the organization name, location (i.e., city and State), dates of service, and type(s) of assistance provided, (2) Provide copies of memoranda of understanding, agreements, or contracts/consultants, (3) training agendas, (4) newspaper articles, (5) correspondence from recipients of assistance, (6) program brochures, (7) extracts from previous grants to support comparable activities.

2. Abstract (not to exceed two pages)

Summarize your proposed program activities. Include the following:

a. category and activity for which the application is being made;

b. brief summary of the need for the proposed activities and how the target audience perceives risk behaviors and preventive measures;

c. brief description of organizational history and capacity;

d. proposed first budget period objectives;

e. brief summary of proposed plan of operation;

f. brief description of planned collaborations with governmental and non-governmental organizations;

g. brief summary of plans for evaluating the activities of this project (only process evaluation is required); and

3. Organizational History and Capacity

4. Assessment of Need

5. Long-term Goals

6. Program Proposal

a. Objectives
b. Plan of Operation
c. Prioritize Program Activities
d. Coordination/Collaboration
e. Communications
f. Time Line

7. Scientific, Theoretical, or Conceptual Foundation for Proposed Activities

8. Plan for Process Evaluation

9. Project Management and Staffing

10. Budget Breakdown and Justification

For the personnel section, indicate the job title, annual salary/rate of pay, and percentage of time spent on this program.

For contracts contained within the application budget, identify the contractor, if known, describe the services to be performed, justify the use of a third party, and provide a breakdown of and justification for the estimated costs of the contracts, the kinds of organizations or parties to be selected, the period of performance, and the method of selection.

Note: If indirect costs are requested, you must provide a copy of your organization's current negotiated Federal indirect cost rate agreement.

11. Attachments

Provide the following as attachments:

a. Proof of nonprofit status;

b. An organizational chart and listing of existing and proposed staff, including volunteer staff;

c. Description of collaborating organizations or institutions, if appropriate and original, signed letters from the chief executive officers of each such organization or institution assuring their understanding of the intent of this program announcement, the proposed program, their role in the proposed program, and the responsibilities of recipients;

d. A description of any funding being received from CDC or other sources to conduct activities related to HIV and similar to those proposed which includes:

(1) A summary of funds and income received to conduct HIV/AIDS programs. This summary must include the name of the sponsoring organization/source of income, level of funding, a description of how the funds have been used, and the budget period. In addition, identify proposed personnel devoted to the project you are proposing and personnel supported by other funding sources and the activities they support.

(2) A summary of the objectives and activities of the funded programs described above.

(3) A description of how funds requested in this application will be used differently or in ways that will expand upon the funds already received, applied for, or being received; and

(4) An assurance that the funds being requested will not duplicate or supplant funds received from any other Federal or non-Federal source. CDC awarded funds can be used to expand or enhance services supported with other Federal or non-Federal funds.

e. Independent audit statements from a certified public accountant for the previous 2 years.

F. Evaluation Criteria

Each application will be evaluated individually against the following

criteria by an independent review group appointed by CDC.

1. Organizational History and Capacity: (15 Total Points)

a. The extent to which the applicant describes their role as a national, regional, local or international entity and how they meet the eligibility criteria defined in this program announcement; describes their existing organizational structure, including constituent or affiliate organizations or networks, how that structure will support the proposed program activities, and how the proposed program will have the capacity to reach targeted communities or groups in multiple States or territories. (3 points)

b. The extent to which the applicant describes their past and current experience in developing and implementing similar programs in the appropriate category and activity; for leadership activities, describes capacity for and expertise in leadership development; for technical assistance activities, describes capacity and expertise in providing technical assistance; for HIV service deliver, describes capacity and expertise in delivering HIV prevention services. (3 points)

c. The extent to which the applicant describes their knowledge of HIV transmission and behavioral and social interventions for preventing HIV transmission, and experience in developing and implementing effective HIV prevention strategies and activities appropriate to the target audience; discusses their capacity and expertise in providing educational or prevention services to the target populations at risk for HIV. (3 points)

d. The degree to which the applicant describes their capacity to provide culturally competent and linguistically appropriate services that respond effectively to the cultural, gender, age, environmental, social and multilingual character of the target audiences, including any history of providing such services. (3 points)

e. The degree to which the applicant describes their experience and ability to (1) collaborate with other governmental and non-governmental organizations, including other national agencies or organizations, State and local health departments, CPGs, and State and local non-governmental organizations that provide HIV prevention services; and (2) coordinate program development with existing governmental and private prevention efforts. (2 points)

f. For any of the above areas in which the applicant does not have capacity or expertise, the degree to which the applicant describes measures to ensure that the proposed program obtains that capacity (*e.g.,* through a collaborating organization or a subcontractor). (1 point)

2. Assessment of Need (10 Total Points)

The extent to which the applicant clearly identifies the need that will be addressed by the proposed program; describes how the need for the proposed program was assessed; includes epidemiologic and other data used to identify the need, an inventory of resources currently available that address the identified need, and an analysis of the gap between the identified need and the resources currently available to address the need (*i.e.,* how will proposed activities or program address an important unmet HIV prevention need or risk-group?). State why the funds being applied for in this application are necessary to address the need.

3. Long-term Goals: (5 Total Points)

The extent to which the applicant describes the broad goals that the proposed program aims to achieve over the course of the project period; and describes how these goals relate to the prevention of HIV infection, either directly or indirectly.

4. Program Proposal (25 Total Points)

The extent to which the applicant describes the proposed program, including:

a. *Objectives:* Provides specific, realistic, time-phased and measurable objectives to be accomplished during the first budget period. Describes how these objectives relate to the program's long-term goals. Describes possible barriers to or facilitators for reaching these objectives. (5 points)

b. *Plan of Operation:* Describes in detail the methods (i.e., strategies and activities) used to achieve the proposed goals and objectives, and perform the required recipient activities. Identifies program staff responsible for conducting the proposed activities. Describes specifically how general and activity-specific requirements will be addressed. Describes their roles and responsibilities and those of each collaborating institution, organization, subcontractor or CBA provider in performing the proposed activities. (5 points)

c. *Prioritize Program Activities:* Describes how program activities will be prioritized to place emphasis on the target populations or communities that are disproportionately affected by HIV/AIDS. (4 points)

d. *Coordination/Collaboration:* Describes how they will work and coordinate with other national, regional, State, and local governmental and nongovernmental organizations, including CBA providers, the private sector, as well as other HIV prevention providers, to conduct the proposed activities. Describes how they will ensure consistency with applicable State and local comprehensive HIV prevention community plans when conducting program activities at the State and local levels. (4 points)

e. *Communications:* Describes how they will share successful approaches with other organizations and how ''lessons learned'' will be compiled and disseminated. (3 points)

f. *Time Line:* Provides a time line that indicates the approximate dates by which activities will be accomplished. (4 points)

5. Scientific, Theoretical, or Conceptual Foundation for Proposed Activities: (15 Total Points)

The extent to which the applicant provides a detailed description of the scientific, theoretical, or conceptual foundation on which the proposed activities are based and which support the potential effectiveness of these activities for addressing the stated need.

6. Plan of Evaluation: (15 Total Points)

The extent to which the applicant describe how activities to monitor progress to determine if the objectives are being achieved, and determine if the methods used to deliver the proposed activities are effective. Describes how data will be collected, analyzed, and used to improve the program.

7. Project Management and Staffing: (15 Total Points)

The extent to which the applicant describes how the proposed program will be managed and staffed, including the location of the program within the organization. Describe in detail each existing or proposed position by job title, function, general duties, and activities. Include the level of effort and allocation of time for each project activity by staff positions. If the identity of any key personnel who will fill a position is known, provide their curriculum vitae (not to exceed two pages per person) as an attachment. Note experience and training related to the proposed project.

8. Budget Breakdown and Justification: (Not Scored)

The extent to which the applicant provides a detailed budget for each proposed activity. Justifies all operating expenses in relation to the stated objectives and planned priority

activities. Provides specific information about the program purpose of each budget item and itemizes calculations wherever appropriate. CDC may not approve or fund all proposed activities.

For the personnel section, indicates the job title, annual salary/rate of pay, and percentage of time spent on this program.

G. Submission and Deadline

Application: Submit the original and two copies of PHS 5161–1 (OMB Number 0937–0189) and Assurance of Compliance with the ''Requirements of AIDS-related written materials, pictorials, audiovisuals, questionnaires, survey instruments, and educational sessions in Centers for Disease Control and Prevention (CDC) Assistance Programs''.

Forms are available at the following Internet addresses: *www.cdc.gov/ * * *.* Forms or in the application kit.

The PHS 5161–1 form is available at

http://forms.psc.gov/forms/phs/ps5161–1.pdf

The Assurance of Compliance Form is available at

http://www.cdc.gov/od/pgo/forms/hivpanel.htm

On or before February 23, 2001 submit the application to the Grants Management Specialist identified in the ''Where to Obtain Additional Information'' section of this announcement.

Deadline: Applications shall be considered as meeting the deadline if they are either:

(a) Received on or before the deadline date; or

(b) Postmarked on or before the deadline date and received in time for submission to the independent review group.

(Applicants must request a legibly dated U.S. Postal Service postmark or obtain a legibly dated receipt from a commercial carrier or U.S. Postal Service. Private metered postmarks shall not be acceptable as proof of timely mailing.)

Late Applications: Applications which do not meet the criteria in (a) or (b) above are considered late applications, will not be considered, and will be returned to the applicant.

H. Other Requirements

Technical Reporting Requirements

Provide CDC with original plus two copies of:

1. Progress reports quarterly including technical assistance and service delivery requested and delivered;

2. financial status report, no more than 90 days after the end of the budget period; and

3. final financial and performance reports, no more than 90 days after the end of the project period.

Send all reports to the Grants Management Specialist identified in the ''Where to Obtain Additional Information'' section of this announcement.

The following additional requirements are applicable to this program. For a complete description of each, see Attachment I in the application kit. (List all applicable requirements by number and title. The Grants Management Branch will include the applicable descriptions in the application kit.)

AR–4 HIV/AIDS Confidentiality Provisions
AR–5 HIV Program Review Panel Requirements
AR–7 Executive Order 12372 Review
AR–8 Public Health System Reporting Requirements
AR–9 Paperwork Reduction Act Requirements
AR–10 Smoke-Free Workplace Requirements
AR–11 Healthy People 2010
AR–12 Lobbying Restrictions
AR–14 Accounting System Requirements
AR–15 Proof of Non-Profit Status

I. Authority and Catalog of Federal Domestic Assistance Number

This program is authorized under section 317(k)(2) of the Public Health Service Act, [42 U.S.C. 247b(k)(2)], as amended. The Catalog of Federal Domestic Assistance number is 93.941.

J. Where to Obtain Additional Information

This and other CDC announcements can be found on the CDC home page Internet address—*http://www.cdc.gov* click on ''Funding'' then ''Grants and Cooperative Agreements.''

To receive additional written information and to request an application kit, call 1–888–GRANTS4 (1–888 472–6874).

You will be asked to leave your name and address and will be instructed to identify the Announcement number of interest.

If you have questions after reviewing the contents of all the documents, business management technical assistance may be obtained from: Julia L. Valentine, Grants Management Specialist, Grants Management Branch, Procurement and Grants Office, Centers for Disease Control and Prevention, 2920 Brandywine Road, Room 3000, Atlanta, GA 30341–4146, Telephone number: 770–488–2732, Email address: jxv1@cdc.gov.

For program technical assistance, contact: Karena Sapsis, Public Health Advisor, Training and Technical Support Systems Branch, Division of HIV/AIDS Prevention, National Center for HIV, STD and TB Prevention, Centers for Disease Control and Prevention, 1600 Clifton Rd., NE Mailstop E–40, Atlanta, GA 30333, Telephone: (404)639–5221 email: kes0@cdc.gov.

Dated: January 11, 2001.

Sandra R. Manning,

Acting Director, Procurement and Grants Office, Centers for Disease Control and Prevention (CDC).

[FR Doc. 01–1468 Filed 1–17–01; 8:45 am]

BILLING CODE 4163–18–P

DEPARTMENT OF HEALTH AND HUMAN SERVICES

Centers for Disease Control and Prevention

Disease, Disability, and Injury Prevention and Control Special Emphasis Panel (SEP): National Partnerships for HIV Prevention with a Focus on Business and Labor, Youth, and Migrant Workers

In accordance with section 10(a)(2) of the Federal Advisory Committee Act (Pub. L. 92–463), the Centers for Disease Control and Prevention (CDC) announces the following meeting.

Name: Disease, Disability, and Injury Prevention and Control Special Emphasis Panel (SEP): National Partnerships for HIV Prevention with a Focus on Business and Labor, Youth, and Migrant Workers, Program Announcement #01017, meeting.

Times and Dates: 11 a.m.– p.m., March 4, 2001 (Open), 8:30 a.m.–4:30 p.m., March 5, 2001 (Closed), 8:30 a.m.–8:45 a.m., March 6, 2001 (Open), 8:45 a.m.–4:30 p.m., March 6, 2001 (Closed).

Place: National Center for HIV, STD, and TB Prevention, CDC, 8 Corporate Square Blvd., Conference Room 1A, B, and C, and 2A and 2C, Atlanta, Georgia 30329.

Status: Portions of the meeting will be closed to the public in accordance with provisions set forth in section 552b(c)(4) and (6), Title 5 U.S.C., and the Determination of the Associate Director for Management and Operations, CDC, pursuant to Public Law 92–463.

Matters to be Discussed: The meeting will include the review, discussion, and evaluation of applications received in response to Program Announcement #01017.

Contact Person for more Information: Elizabeth A. Wolfe, Prevention Support Office, National Center for HIV, STD, and TB Prevention, CDC, Corporate Square Office Park, 8 Corporate Square Boulevard, M/S E07, Atlanta, Georgia 30329, telephone 404/639–8025.

The Director, Management Analysis and Services office has been delegated the

authority to sign Federal Register notices pertaining to announcements of meetings and other committee management activities, for both the Centers for Disease Control and Prevention and the Agency for Toxic Substances and Disease Registry.

Dated: January 11, 2001.

Carolyn J. Russell,

Director, Management Analysis and Services Office, Centers for Disease Control and Prevention CDC.

[FR Doc. 01–1469 Filed 1–17–01; 8:45 am]

BILLING CODE 4163–18–P

DEPARTMENT OF HEALTH AND HUMAN SERVICES

Centers for Disease Control and Prevention

Advisory Council for the Elimination of Tuberculosis: Meeting

In accordance with section 10(a)(2) of the Federal Advisory Committee Act (Pub. L. 92–463), the Centers for Disease Control and Prevention (CDC) announces the following council meeting.

Name: Advisory Council for the Elimination of Tuberculosis (ACET).

Times and Dates: 8:30 a.m.–5 p.m., February 13, 2001; 8:30 a.m.–12 p.m., February 14, 2001.

Place: Corporate Square, Building 8, 1st Floor Conference Room, Atlanta Georgia 30333.

Status: Open to the public, limited only by the space available. The meeting room accommodates approximately 100 people.

Purpose: This council advises and makes recommendations to the Secretary of Health and Human Services, the Assistant Secretary for Health, and the Director, CDC, regarding the elimination of tuberculosis. Specifically, the Council makes recommendations regarding policies, strategies, objectives, and priorities; addresses the development and application of new technologies; and reviews the extent to which progress has been made toward eliminating tuberculosis.

Matters to be Discussed: Agenda items include issues pertaining to the Institute of Medicine Report ''Ending Neglect'', TB Drug Susceptibility Testing and TB in Low Incidence Areas.

Contact Person for More Information: Paulette Ford, National Center for HIV, STD, and TB Prevention, 1600 Clifton Road, NE, M/S E–07, Atlanta, Georgia 30333, telephone 404/639–8008.

The Director, Management Analysis and Services Office, has been delegated the authority to sign Federal Register Notices pertaining to announcements of meetings and other committee management activities, for both the Centers for Disease Control and Prevention and the Agency for Toxic Substances and Disease Registry.

Dated: January 11, 2001.

Carolyn J. Russell,

Director, Management Analysis and Services Office, Centers for Disease Control and Prevention.

[FR Doc. 01–1471 Filed 1–17–01; 8:45 am]

BILLING CODE 4163–18–P

DEPARTMENT OF HEALTH AND HUMAN SERVICES

Administration for Children and Families

Proposed Information Collection Activity; Comment Request

Proposed Projects

Title: Title IV–E Foster Care and Adoption Assistance Financial Report.

OMB No.: 0970–0205.

Description: This form is used by States and Puerto Rico to facilitate the reporting of expenditures for the Foster Care and Adoption Assistance programs. State agencies (including Puerto Rico) use this form to report data on a quarterly basis. The form provides specific data regarding financial disbursements, obligations and estimates. It provides States with a mechanism to request grant awards and certify the availability of State matching funds. Failure to collect this data would seriously compromise the Administration for Children and Families' ability to issue grant awards and monitor expenditures. This form is also used to prepare ACF budget submission to Congress.

Respondents: States and Puerto Rico.

ANNUAL BURDEN ESTIMATES

Instrument	Number of respondents	Number of responses per respondent	Average burden hours per response	Total burden hours
IV–E–1	52	4/YR	25	5200

Estimated Total Annual Burden Hours: 5200.

In compliance with the requirements of section 3506(c)(2)(A) of the Paperwork Reduction Act of 1995, the Administration for Children and Families is soliciting public comment on the specific aspects of the information collection described above. Copies of the proposed collection of information can be obtained and comments may be forwarded by writing to the Administration for Children and Families, Office of Information Services, 370 L'Enfant Promenade, SW., Washington, DC 20447, Attn: ACF Reports Clearance Officer. All requests should be identified by the title of the information collection.

The Department specifically requests comments on: (a) Whether the proposed collection of information is necessary for the proper performance of the functions of the agency, including whether the information shall have practical utility; (b) the accuracy of the agency's estimate of the burden of the proposed collection of information; (c) the quality, utility, and clarity of the information to be collected; and (d) ways to minimize the burden of the collection of information on respondents, including through the use of automated collection techniques or other forms of information technology. Consideration will be given to comments and suggestions submitted within 60 days of this publication.

Dated: January 11, 2001.

Bob Sargis,

Reports Clearance Officer.

[FR Doc. 01–1433 Filed 1–17–01; 8:45 am]

BILLING CODE 4184–01–M

DEPARTMENT OF HEALTH AND HUMAN SERVICES

Food and Drug Administration

[Docket No. 00D–1598]

Draft Guidance for Industry: Voluntary Labeling Indicating Whether Foods Have or Have Not Been Developed Using Bioengineering; Availability

AGENCY: Food and Drug Administration, HHS.

ACTION: Notice.

SUMMARY: The Food and Drug Administration (FDA (we)) is announcing the availability of a draft guidance for industry entitled ''Voluntary Labeling Indicating Whether Foods Have or Have Not Been Developed Using Bioengineering.'' FDA developed this draft guidance to assist manufacturers, who wish to voluntarily label their foods (human and animal) as being made with or without bioengineering or the use of bioengineered ingredients, to ensure that labeling is truthful and not misleading. FDA is taking this action in response to requests from food manufacturers and as part of the Clinton administration's initiatives to strengthen science-based regulation of bioengineered foods and consumer access to information.

DATES: Submit written comments concerning the draft guidance to ensure adequate consideration in the preparation of a revised guidance, if warranted, by March 19, 2001. However, you may submit written comments at any time. Submit written comments concerning the collection of information by March 19, 2001.

ADDRESSES: Submit written comments on the draft guidance and the collection of information to the Dockets Management Branch (HFA–305), Food and Drug Administration, 5630 Fishers Lane, rm. 1061, Rockville, MD 20852. Identify the comments with the docket number found in brackets in the heading of this document. Submit written requests for single copies of the draft guidance entitled ''Draft Guidance for Industry: Voluntary Labeling Indicating Whether Foods Have or Have Not Been Developed Using Bioengineering'' to the Office of Nutritional Products, Labeling, and Dietary Supplements (HFS–800), Center for Food Safety and Applied Nutrition, Food and Drug Administration, 200 C St. SW., Washington, DC 20204. Send one self-addressed adhesive label to assist that office in processing your request, or include a fax number to which the draft guidance may be sent. Alternatively, you may request a copy of the draft guidance by calling 202–205–4561, or you may fax your request to 202–205–4594. See the **SUPPLEMENTARY INFORMATION** section for electronic access to the draft guidance.

FOR FURTHER INFORMATION CONTACT:

Regarding human food issues: Catalina Ferre-Hockensmith, Center for Food Safety and Applied Nutrition (HFS–822), Food and Drug Administration, 200 C St. SW., Washington, DC 20204, 202–205–4168.

Regarding animal feed issues: William D. Price, Center for Veterinary Medicine (HFV–200), Food and Drug Administration, 7500 Standish Pl., Rockville, MD 20855, 301–827–6652.

SUPPLEMENTARY INFORMATION:

I. Background

In the **Federal Register** of May 29, 1992 (57 FR 22984), FDA published its ''Statement of Policy: Foods Derived from New Plant Varieties'' (the 1992 policy). The 1992 policy applies to foods (human and animal) developed from new plant varieties, including varieties that are developed using recombinant deoxyribonucleic acid (rDNA) technology, which is often referred to as ''genetic engineering,'' ''biotechnology,'' or ''bioengineering.'' The 1992 policy provides guidance to industry on scientific and regulatory issues related to bioengineered foods and solicited written comments from interested persons. It includes guidance on questions to be answered by developers of foods from new plant varieties to ensure that the new products are safe and comply with applicable legal requirements.

In the 1992 policy, we also address the labeling of foods derived from new plant varieties, including plants developed by bioengineering. The 1992 policy does not establish special labeling requirements for bioengineered foods as a class of foods. The 1992 policy states that we have no basis for concluding that bioengeered foods differ from other foods in any meaningful or uniform way, or that, as a class, foods developed by the new techniques present any different or greater safety concern than foods developed by traditional plant breeding.

Although we do not require special labeling for bioengineered foods, as a class of foods, in the 1992 policy we advised that labeling requirements that apply to foods in general also apply to foods produced using biotechnology. Section 403(i) of the Federal Food, Drug, and Cosmetic Act (the act) (21 U.S.C. 343(i)) requires that each food bear a common or usual name or, in the absence of such a name, an appropriately descriptive term. In addition, under section 201(n) of the act (21 U.S.C. 321(n)), the labeling of food must reveal all facts that are material in light of representations made in the labeling or in light of consequences that may result from the use of the foods. Thus:

- If a bioengineered food is significantly different from its traditional counterpart, such that the common or usual name no longer adequately describes the new food, the name must be changed to describe the difference.
- If an issue exists for the food or a constituent of the food regarding how the food is used or consequences of its use, a statement must be made on the labeling to describe the issue.
- If a bioengineered food has a significantly different nutritional property, its labeling must reflect the difference.
- If a new food includes an allergen that consumers would not expect to be present based on the name of the food, the presence of that allergen must be disclosed in the labeling.

In the **Federal Register** of April 28, 1993 (58 FR 25837), we requested data and information (the 1993 information request) on certain labeling issues that had arisen from the labeling guidance in the 1992 policy. In 1999, we held three public meetings (64 FR 57470, October 25, 1999). The purpose of those meetings was for us to share our current approach and experience over the previous 5 years regarding bioengineered foods, to solicit views on whether our policies should be modified, and to gather information to be used to assess the most appropriate means of providing information to the public about bioengineered products in the food supply. We received more than 50,000 written comments about our policy regarding safety and labeling of bioengineered foods. The theme related to labeling in those comments and the testimony at the meetings was that there are very strongly held but divergent views as to whether bioengineered foods should be required to bear special labeling. However, there was general agreement that providing more information to consumers about bioengineered foods would be useful. A number of comments supported the need for guidance from FDA regarding appropriate ways that industry could voluntarily provide information on a food label about bioengineering.

We have reviewed information in the comments received in response to the 1992 policy and the 1993 information request as well as the comments from the meetings held in 1999. Most of the comments that addressed labeling requested mandatory disclosure of the fact that the food or its ingredients was bioengineered or was produced from bioengineered food. However, these comments did not provide data or other information regarding consequences to consumers from eating the foods or any other basis for us to find under section 201(n) of the act that such a disclosure was a material fact. Many of the comments expressed concern about possible long-term consequences from consuming bioengineered foods, but they did not contend that any of the bioengineered foods already on the market have adverse health effects. The comments were mainly expressions of concern about the unknown. We are still not aware of any data or other information that would form a basis for concluding that the fact that a food or its ingredients was produced using bioengineering is a material fact that must be disclosed under sections 403(a) and 201(n) of the act. We are, therefore, reaffirming our decision to not require special labeling of all bioengineered foods.

We are providing guidance to assist manufacturers who wish to label their foods voluntarily as being made with or without the use of bioengineered ingredients. While the use of bioengineering is not a material fact, many consumers are interested in the information, and some manufacturers may want to respond to this consumer desire. We developed this guidance using information from the comments and from focus groups, as well as other resources. The guidance is intended to help manufacturers ensure that their labeling is truthful and not misleading. In addition, because the act defines food as articles used for food or drink for man or other animals, this guidance applies to animal feeds as well as to human foods.

The guidance addresses the use of statements in the labeling of foods that are bioengineered or contain bioengineered ingredients. It is intended to provide guidance on how a manufacturer may make statements in the labeling about bioengineered foods and ingredients, without such statements being false or misleading.

The guidance also addresses the use of statements in the labeling that indicate that the food, or its ingredients, was not bioengineered. The agency is soliciting comments on the entire guidance document, but it is particularly interested in comments on how the draft guidance deals with statements like ''GMO free,'' ''GM free,'' ''biotech free,'' and ''no genetically engineered materials.'' For example, we are seeking comment on whether, and how, statements like ''GM free'' or ''no genetically engineered material'' can be made without being false or misleading. In the guidance document, FDA advises that the term ''free'' may be difficult to use without being false or misleading. If it implies ''zero,'' it may be very difficult to substantiate. The adventitious presence of bioengineered material may make a ''zero'' claim inaccurate. Further, these terms would be misleading if they imply that the food is superior because the food is not bioengineered. We have concluded that the use, or absence of use, of bioengineering in the production of a food is not a fact that is material either with respect to consequences resulting from the use of the food or due to representations on the labeling.

We suggest in the guidance that terms like ''GM free'' and ''biotech free'' either not be used in bioengineering labeling statements or be in a context that makes clear that a zero level of bioengineered material is not implied. We recognize that the terms are popular among those manufacturers who have already made label statements that a food was not bioengineered. FDA requests comments on whether statements like ''GM free,'' ''biotech free,'' and ''no genetically engineered materials'' can be made without being false or misleading, and, if so, how. Does such a statement imply zero content of bioengineered material? If so, would a clarifying statement help the consumer to understand that there may be some low level of bioengineered material present? Should substantiation of no detectable bioengineered material be required in the absence of a clarifying statement? Does ''biotech free'' or another similar term imply that the labeled food is superior to foods that are not so labeled? If so, would a clarifying statement, for example, a statement that the absence of the use of bioengineering does not make the food superior to food not so labeled or to a bioengineered food or ingredient, clarify the term adequately? Would such a clarifying statement be needed in all instances or are there some uses of ''GM free'' and similar terms that would not imply that the labeled food is superior, and why? We specifically request comment on these as well as any other aspects of how to avoid false or misleading statements in the labeling about the absence of use of bioengineering in the production of a food or its ingredients.

This Level 1 draft guidance represents our current thinking on the voluntary labeling indicating whether foods have or have not been developed using bioengineering. It does not create or confer any rights for or on any person and does not operate to bind FDA or the public. An alternative approach may be used if such an approach satisfies the requirements of applicable statutes, and regulations. The draft guidance is being distributed for comment purposes in accordance with FDA's good guidance practices (65 FR 56468, September 19, 2000).

II. Paperwork Reduction Act of 1995

Under the Paperwork Reduction Act of 1995 (the PRA) (44 U.S.C. 3501–3520), Federal agencies must obtain approval from the Office of Management and Budget (OMB) for each collection of information they conduct or sponsor. ''Collection of information'' is defined in 44 U.S.C. 3502(3) and 5 CFR 1320.3(c) and includes agency requests or requirements that members of the public submit reports, keep records, or provide information to a third party. Section 3506(c)(2)(A) of the PRA (44 U.S.C. 3506(c)(2)(A)) requires Federal agencies to provide a 60-day notice in the **Federal Register** concerning each proposed collection of information before submitting the collection to OMB for approval. To comply with this requirement, FDA is publishing notice of the proposed collection of information set forth in this document.

With respect to the following collection of information, FDA invites comments on: (1) Whether the proposed collection of information is necessary for the proper performance of FDA's functions, including whether the information will have practical utility; (2) the accuracy of FDA's estimate of the burden of the proposed collection of information, including the validity of the methodology and assumptions used; (3) ways to enhance the quality, utility, and clarity of the information to be collected; and (4) ways to minimize the burden of the collection of information on respondents, including through the use of automated collection techniques, when appropriate, and other forms of information technology.

Title: Suggested Documentation for Substantiating Whether Foods Have or Have Not Been Developed Using Bioengineering

Description: The 1992 policy stated that the method of development of a new plant variety, including plants developed using bioengineering, is not information that is material under section 201(n) of the act and, therefore, would not be required in the labeling of

food. This conclusion is consistent with our historic interpretation of section 201(n) of the act, in that the method of plant breeding is not required to be disclosed in labeling. In the 1993 information request, we requested additional information on labeling issues that had risen from our 1992 policy. Subsequently, in 1999, we held three public meetings to get public input on our existing policy with regard to its premarket review of foods produced through biotechnology and the labeling of such products. In response to comments that we received on our 1992 policy, the 1993 information request, and the public meetings, we decided to develop guidance for voluntary labeling indicating whether foods have or have not been developed using bioengineering. This guidance will assist manufacturers in labeling foods that have or have not been developed using bioengineering so that the labeling statement is truthful, not misleading, and scientifically valid. The information that the manufacturers will collect is documentation of handling practices so that they can truthfully label their products to indicate, if they so choose, whether the food has or has not been developed using bioengineering.

In general, FDA anticipates that manufacturers that claim that a product is not developed using bioengineered material would substantiate the claim. If validated testing is not available to ensure the absence of bioengineered material for a specific food, we suggest that manufacturers document handling practices to substantiate a claim that a food was not developed using bioengineering, rather than using a ''free'' claim. Thus, to substantiate handling practices, the manufacturers would have to document the source of such foods. Examples of documentation that we anticipate will demonstrate handling practices and procedures about how the food was processed are recordkeeping, certifications or affidavits from farmers, processors, and others in the food production and distribution chain. We are neither suggesting that firms maintain a certain set list of documents nor are we suggesting that anything less or different would likely be considered unacceptable. Rather, we are leaving it to each firm's discretion to maintain appropriate documentation to demonstrate that the food was produced using traditional methods.

Description of Respondents: Manufacturers of foods that were and were not produced using bioengineering.

FDA estimates the burden of this collection of information as follows:

TABLE 1.—ESTIMATED ANNUAL REPORTING BURDEN [1]

No. of Respondents	Annual Frequency per Response	Total Annual Responses	Hours per Response	Operating and Maintenance Costs	Total Hours
893	21	18,753	1	$1,781,400	18,753

[1] There are no capital costs associated with this collection of information.

TABLE 2.—ESTIMATED ANNUAL RECORDKEEPING BURDEN [1]

No. of Recordkeepers	Annual Frequency per Recordkeeper	Total Annual Records	Hours per Recordkeeper	Operating and Maintenance Costs	Total Hours
68	26	1,768	1	$53,040	1,768

[1] There are no capital costs associated with this collection of information.

FDA estimates that almost all of the organic producers and manufacturers who have issued statements that they will not use bioengineered ingredients will choose to label, and therefore, will incur the reporting burden. We determined the estimates for the annual reporting burden by using the approximately 18,753 products (16,985 organic products and 1,768 non-organic products) from producers who may not use bioengineered ingredients in their products. These manufacturers include producers who market to a niche of consumers who choose not to use products with bioengeered ingredients and manufacturers who have stated that they do not use bioengineered ingredients in their products. We estimated that the numbers of firms that will choose to label is 893 (825 firms for organic products and 68 for non-organic products). We estimated that the manufacturers of these products would choose to state on their label and in their labeling that those products were not developed using bioengineering. Such labeling would increase their paperwork burden. The estimates on the annual reporting burden (table 1 of this document) are based on agency knowledge of, and experience with, food labeling. The 18,753 product estimate may be too low if FDA has been unable to identify all producers that could use non-bioengineering labels or if FDA's labeling guidance encourages producers who have not issued bioengineering statements to now use such statements on the label. On the other hand, this may be an overestimate if some producers, who have been making statements indicating that they will try to use foods that were not developed using bioengineering, choose not to label their products.

We believe that the burden associated with the voluntary labeling of foods that have not been developed using bioengineering would be a one-time burden for the small number of firms that would decide, voluntarily, to add this additional information to the labels for their products, separate from any other label changes for their products. We estimate that at least 90 percent of firms would coordinate the addition of the statement on the label that their products were not developed using bioengineering with other changes in their labels, in which case the voluntary cost of transmitting the information to consumers in labeling would be included almost entirely in the cost of other voluntary or required labeling changes. The incremental cost for these 803 firms (893 x 90 percent) would be approximately $50 per label for 16,878 labels, or $843,900 total. For the remaining 90 firms that would not coordinate changes with other labeling changes, we estimate that the cost would be approximately $500 per label for 1,875 labels, or $937,500 total. The estimated total operating and

maintenance costs in table 1 of this document are, therefore, $1,781,400.

When determining the annual recordkeeping burden (table 2 of this document), we estimated that the number of firms that would maintain records to substantiate labeling that their products were not developed using bioengineering is the same as the number of respondents with the reporting burden minus the number of firms marketing organic products (i.e., 68). We did not include products that are labeled ''organic'' in the estimated annual recordkeeeping burden because according to a proposal in the **Federal Register** of March 13, 2000 (65 FR 13512), issued by the Agriculture Marketing Service of the U.S. Department of Agriculture, a food labeled as ''organic'' would not be permitted to contain bioengineered materials. Therefore, the 16,985 organic products available today would be able to bear a voluntary labeling statement that the food was not developed using bioengineering. Thus, there is no additional paperwork burden to substantiate a claim that a product is not developed using bioengineering for these products. Because most of the non-organic products whose producers have stated they will not use bioengineered ingredients are made by large firms for whom the verification process is not likely to impose a significant burden relative to the size of their operation, we assume that the paperwork processing time associated with testing or source verification for these products is approximately 1 hour for a total of 1,768 hours per year. Therefore, FDA estimated that the total recordkeeping burden would be 1,768 hours per year. Based on our experience, we have estimated that the overhead and maintenance cost are $30 per hour. The estimated total operating and maintenance cost in table 2 of this document are, therefore, $53,040 total.

III. Comments

Interested persons may submit to the Dockets Management Branch (address above) written comments on the draft guidance by March 19, 2001, to ensure adequate consideration in the preparation of a revised guidance, if warranted. However, interested persons may submit written comments at any time. Two copies of any comments are to be submitted, except that individuals may submit one copy. Comments are to be identified with the docket number found in brackets in the heading of this document. Submit to the Dockets Management Branch written comments concerning this collection of information by March 19, 2001. The guidance and received comments are available for public examination in the Dockets Management Branch between 9 a.m. and 4 p.m., Monday through Friday.

IV. Electronic Access

An electronic version of the draft guidance also is available on the Internet at http://www.cfsan.fda.gov/dms/.

Dated: November 15, 2000.

Margaret M. Dotzel,

Associate Commissioner for Policy.

[FR Doc. 01–1047 Filed 1–17–01; 8:45 am]

BILLING CODE 4160–01–F

DEPARTMENT OF HEALTH AND HUMAN SERVICES

Health Resources and Services Administration

Agency Information Collection Activities: Proposed Collection: Comment Request

In compliance with the requirement for opportunity for public comment on proposed data collection projects (section 3506(c)(2)(A) of Title 44, United States Code, as amended by the Paperwork Reduction Act of 1995, Pub. L. 104–13), the Health Resources and Services Administration (HRSA) publishes periodic summaries of proposed projects being developed for submission to OMB under the Paperwork Reduction Act of 1995. To request more information on the proposed project or to obtain a copy of the data collection plans and draft instruments, call the HRSA Reports Clearance Officer on (301) 443–1129.

Comments are invited on: (a) Whether the proposed collection of information is necessary for the proper performance of the functions of the agency, including whether the information shall have practical utility; (b) the accuracy of the agency's estimate of the burden of the proposed collection of information; (c) ways to enhance the quality, utility, and clarity of the information to be collected; and (d) ways to minimize the burden of the collection of information on respondents, including through the use of automated collection techniques or other forms of information technology.

Proposed Project: Organ Procurement and Transplantation Network (42 CFR Part 121, OMB No. 0915–0184): Extension

The operation of the Organ Procurement and Transplantation Network (OPTN) necessitates certain recordkeeping and reporting requirements in order to perform the functions related to organ transplantation under contract to HHS. This is a request for an extension of the current recordkeeping and reporting requirements associated with the OPTN. These data will be used by HRSA in monitoring the contracts for the OPTN and the Scientific Registry and in carrying out other statutory responsibilities. Information is needed to match donor organs with recipients, to monitor compliance of member organizations with OPTN rules and requirements, and to ensure that all qualified entities are accepted for membership in the OPTN.

The estimated annual response burden is as follows:

ESTIMATED ANNUAL REPORTING AND RECORDKEEPING BURDEN

Section and activity	Number of respondents	Responses per respondent	Total responses	Hours per response	Total burden hours
121.3(b)(2)—OPTN membership and application requirements for OPOs, hospitals, histocompatibility laboratories	30	1	30	40	1,200
121.6(c)—Submitting criteria for organ acceptance	900	1	900	0.1	90
121.6(c)—Sending criteria to OPOs	900	1	900	0.1	90
121.7(b)(4)—Reasons for Refusal	900	0.5	34,200	0.1	3,420
121.7(e)—Transplant to prevent organ wastage	900	0.5	420	0.1	42
121.9(b)—Designated Transplant Program Requirements	10	1	10	2	20

ESTIMATED ANNUAL REPORTING AND RECORDKEEPING BURDEN—Continued

Section and activity	Number of respondents	Responses per respondent	Total responses	Hours per response	Total burden hours
Total	940	38.8	36,460	.1	4,862

Send comments to Susan G. Queen, Ph.D., HRSA Reports Clearance Officer, Room 14–33, Parklawn Building, 5600 Fishers Lane, Rockville, MD 20857. Written comments should be received within 60 days of this notice.

Dated: January 10, 2001.

Jane M. Harrison,

Director, Division of Policy Review and Coordination.

[FR Doc. 01–1390 Filed 1–17–01; 8:45 am]

BILLING CODE 4160–15–P

DEPARTMENT OF HEALTH AND HUMAN SERVICES

National Institutes of Health

National Center For Research Resources; Notice of Closed Meeting

Pursuant to section 10(d) of the Federal Advisory Committee Act, as amended (5 U.S.C. Appendix 2), notice is hereby given of the following meeting.

The meeting will be closed to the public in accordance with the provisions set forth in sections 552b(c)(4) and 552b(c)(6), Title 5 U.S.C., as amended. The grant applications and the discussions could disclose confidential trade secrets or commercial property such as patentable material, and personal information concerning individuals associated with the grant applications, the disclosure of which would constitute a clearly unwarranted invasion of personal privacy.

Name of Committee: National Center for Research Resources, Special Emphasis Panel, Research Centers in Minority Institutions.

Date: February 22, 2001.

Time: 6 p.m. to 7 p.m.

Agenda: To review and evaluate grant applications.

Place: Residence Inn, 7335 Wisconsin Avenue, Bethesda, MD 20814.

Contact Person: C. William Angus, PhD, Scientific Review Administrator, Office of Review, National Center for Research Resources, 6705 Rockledge Drive, MSC 7965, Room 6018, Bethesda, MD 20892—7965, 301–435–0812.

(Catalogue of Federal Domestic Assistance Program Nos. 93.306, Comparative Medicine, 93.306; 93.333, Clinical Research, 93.333; 93.371, Biomedical Technology; 93.389, Research Infrastructure, National Institutes of Health, HHS)

Dated: January 9, 2001.

LaVerne Y. Stringfield,

Director, Office of Federal Advisory Committee Policy.

[FR Doc. 01–1459 Filed 1–17–01; 8:45 am]

BILLING CODE 4140–01–M

DEPARTMENT OF HEALTH AND HUMAN SERVICES

National Institutes of Health

National Institute of General Medical Sciences; Notice of Closed Meeting

Pursuant to section 10(b) of the Federal Advisory Committee Act, as amended (5 U.S.C. appendix 2), notice is hereby given of the following meeting.

The meeting will be closed to the public in accordance with the provisions set forth in sections 552b(c)(4) and 552b(c)(6), title 5 U.S.C., as amended. The grant applications and the discussions could disclose confidential trade secrets or commercial property such as patentable material, and personal information concerning individuals associated with the grant applications, the disclosure of which would constitute a clearly unwarranted invasion of personal privacy.

Name of Committee: National Institute of General Medical Sciences Special Emphasis Panel.

Date: January 10, 2001.

Time: 3 PM to 4:30 PM.

Agenda: To review and evaluate grant applications.

Place: Natcher Building, Room 1AS–13, Bethesda, MD 20892, (Telephone Conference Call).

Contact Person: Laura Moen, PhD, Scientific Review Administrator, Office of Scientific Review, National Institute of General Medical Sciences, National Institutes of Health, Natcher Building, Room 1AS–13H, Bethesda, MD 20892, 301–594–3998.

This notice is being published less than 15 days prior to the meeting due to the timing limitations imposed by the review and funding cycle.

(Catalogue of Federal Domestic Assistance Program Nos. 93.375, Minority Biomedical Research Support; 93.821, Cell Biology and Biophysics Research; 93.859, Pharmacology, Physiology, and Biological Chemistry Research; 93.862, Genetics and Developmental Biology Research; 93.88, Minority Access to Research Careers; 93.96, Special Minority Initiatives, National Institutes of Health, HHS)

Dated: January 8, 2001.

LaVerne Y. Stringfield,

Director, Office of Federal Advisory Committee Policy.

[FR Doc. 01–1451 Filed 1–17–01; 8:45 am]

BILLING CODE 4140–01–M

DEPARTMENT OF HEALTH AND HUMAN SERVICES

National Institutes of Health

National Institute of Arthritis and Musculoskeletal and Skin Diseases; Notice of Closed Meeting

Pursuant to section 10(d) of the Federal Advisory Committee Act, as amended (5 U.S.C. appendix 2), notice is hereby given of the following meeting.

The meeting will be closed to the public in accordance with the provisions set forth in sections 552b(c)(4) and 552b(c)(6), title 5 U.S.C., as amended. The grant applications and the discussions could disclose confidential trade secrets or commercial property such as patentable material, and personnel information concerning individuals associated with the grant applications, the disclosure of which would constitute a clearly unwarranted invasion of personal privacy.

Name of Committee: Arthritis and Musculoskeletal and Skin Diseases Special Grants Review Committee.

Date: February 20, 2001.

Time: 8:30 AM to 3:30 PM.

Agenda: To review and evaluate grant applications.

Place: Double Tree Hotel, 1750 Rockville Pike, Rockville, MD 20852.

Contact Person: John R. Lymangrover, PhD, Scientific Review Administrator, National Institutes of Health, NIAMS, Natcher Bldg., Room 5As25N, Bethesda, MD 20892, 301–594–4952.

(Catalogue of Federal Domestic Assistance Program Nos. 93.846, Arthritis, Musculoskeletal and Skin Diseases Research, National Institutes of Health, HHS)

Dated: January 9, 2001.

LaVerne Y. Stringfield,

Director, Office of Federal Advisory Committee Policy.

[FR Doc. 01–1452 Filed 1–12–01; 8:45 am]

BILLING CODE 4140–01–M

DEPARTMENT OF HEALTH AND HUMAN SERVICES

National Institutes of Health

National Institute of Dental & Craniofacial Research; Notice of Closed Meetings

Pursuant to section 10(d) of the Federal Advisory Committee Act, as amended (5 U.S.C. Appendix 2), notice is hereby given of the following meetings.

The meetings will be closed to the public in accordance with the provisions set forth in sections 552b(c)(4) and 552b(c)(6), title 5 U.S.C., as amended. The grant applications and the discussions could disclose confidential trade secrets or commercial property such as patentable material, and personal information concerning individuals associated with the grant applications, the disclosure of which would constitute a clearly unwarranted invasion of personal privacy.

Name of Committee: National Institute of Dental and Craniofacial Research Special Emphasis Panel 00–20, Review of R01s.

Date: January 12, 2001.

Time: 3:00 p.m. to 5:00 p.m.

Agenda: To review and evaluate grant applications and/or proposals.

Place: Natcher Building, Rm. 4AN44F, Bethesda, MD 20892, (Telephone Conference Call).

Contact Person: Anna Sandberg, PhD., Scientific Review Administrator, National Institute of Dental & Craniofacial Res., 45 Center Drive, Natcher Building, Rm. 4AN44F, Bethesda, MD 20892, (301) 594–3089.

This notice is being published less than 15 days prior to the meeting due to the timing limitations imposed by the review and funding cycle.

Name of Committee: National Institute of Dental and Craniofacial Research Special Emphasis Panel 01–19, Review of P01.

Date: January 24, 2001.

Time: 2:30 p.m. to 5:00 p.m.

Agenda: To review and evaluate grant applications and/or proposals.

Place: Natcher Building, Rm. 4AN44F, Bethesda, MD 20892, (Telephone Conference Call).

Contact Person: H. George Hausch, PhD., Chief, 4500 Center Drive, Natcher Building, Rm. 4AN44F, National Institutes of Health, Bethesda, MD 20892, (301) 594–2372.

This notice is being published less than 15 days prior to the meeting due to the timing limitations imposed by the review and funding cycle.

Name of Committee: National Institute of Dental and Craniofacial Research Special Emphasis Panel 00–16, Review of R13 Grants.

Date: January 31, 2001.

Time: 12:00 p.m. to 3:00 p.m.

Agenda: To review and evaluate grant applications.

Place: 45 Center Drive, Bethesda, MD 20892, (Telephone Conference Call).

Contact Person: H. George Hausch, PhD., Chief, 4500 Center Drive, Natcher Building, Rm. 4AN44F, National Institutes of Health, Bethesda, MD 20892, (301) 594–2372.

Name of Committee: National Institute of Dental and Craniofacial Research Special Emphasis Panel 00–14, Review of R01 Grants.

Date: April 16, 2001.

Time: 8:30 a.m. to 5:00 p.m.

Agenda: To review and evaluate grant applications.

Place: Marriott Pooks Hill, 5151 Pooks Hill Road, Bethesda, MD 20814.

Contact Person: Philip Washko, PhD., DmD, Scientific Review Administrator, 45 Center Drive, Natcher Building, Rm. 4AN44F, National Institutes of Health, Bethesda, MD 20892, (301) 594–2372.

(Catalogue of Federal Domestic Assistance Program Nos. 93.121, Oral Diseases and Disorders Research, National Institutes of Health, HHS)

Dated: January 9, 2001.

LaVerne Y. Stringfield,

Director, Office of Federal Advisory Committee Policy.

[FR Doc. 01–1453 Filed 1–17–01; 8:45 am]

BILLING CODE 4140–01–M

DEPARTMENT OF HEALTH AND HUMAN SERVICES

National Institutes of Health

National Institute of Neurological Disorders and Stroke; Notice of Closed Meetings

Pursuant to section 10(d) of the Federal Advisory Committee Act, as amended (5 U.S.C. Appendix 2), notice is hereby given of the following meetings.

The meetings will be closed to the public in accordance with the provisions set forth in sections 552b(c)(4) and 552b(c)(6), Title 5 U.S.C., as amended. The grant applications and the discussions could disclose confidential trade secrets or commercial property such as patentable material, and personal information concerning individuals associated with the grant applications, the disclosure of which would constitute a clearly unwarranted invasion of personal privacy.

Name of Committee: National Institute of Neurological Disorders and Stroke Initial Review Group Neurological Sciences and Disorders A.

Date: February 18–19, 2001.

Time: 8:30 am to 5:00 pm.

Agenda: To review and evaluate grant applications.

Place: Holiday Inn—Fort Lauderdale Beach, 909 Fort Lauderdale Beach Blvd., Fort Lauderdale, FL 33304.

Contact Person: Richard D. Crosland, PhD, Scientific Review Administrator, Scientific Review Branch, Division of Extramural Research, NINDS/NIH/DHHS, Neuroscience Center, 6001 Executive Blvd., Suite 3208, MSC 9529, Bethesda, MD 20892–9529, 301–496–9223.

Name of Committee: National Institute of Neurological Disorders and Stroke Initial Review Group Neurological Sciences and Disorders B.

Date: February 22–23, 2001.

Time: 8:00 am to 6:00 pm.

Agenda: To review and evaluate grant applications.

Place: La Posada De Santa Fe Resort and Spa, 330 East Palace Avenue, Santa Fe, NM 87501.

Contact Person: Paul A. Sheehy, PhD, Scientific Review Administrator, Scientific Review Branch, Division of Extramural Research, NINDS/NIH/DHHS, Neuroscience Center, 6001 Executive Blvd., Suite 3208, MSC 9529, Bethesda, MD 20892–9529, 301–496–9223.

Name of Committee: National Institute of Neurological Disorders and Stroke Initial Review Group Neurological Sciences and Disorders C.

Date: February 22–23, 2001.

Time: 8:00 am to 5:00 pm.

Agenda: To review and evaluate grant applications.

Place: La Fonda on the Plaza, 100 East San Francisco Street, Santa Fe, NM 87501.

Contact Person: Alan L. Willard, PhD, Scientific Review Administrator, Scientific Review Branch, Division of Extramural Research, NINDS/NIH/DHHS, Neuroscience Center, 6001 Executive Blvd., Suite 3208, MSC 9529, Bethesda, MD 20892–9529, 301–496–9223.

(Catalogue of Federal Domestic Assistance Program Nos. 93.853, Clinical Research Related to Neurological Disorders; 93.854, Biological Basis Research in the Neurosciences, National Institutes of Health, HHS)

Dated: January 9, 2001.

LaVerne Y. Stringfield,

Director, Office of Federal Advisory Committee Policy.

[FR Doc. 01–1454 Filed 1–17–01; 8:45 am]

BILLING CODE 4140–01–M

DEPARTMENT OF HEALTH AND HUMAN SERVICES

National Institutes of Health

National Institute of Arthritis and Musculoskeletal and Skin Diseases; Notice of Closed Meeting

Pursuant to section 10(d) of the Federal Advisory Committee Act, as amended (5 U.S.C. Appendix 2), notice is hereby given of the following meeting.

The meeting will be closed to the public in accordance with the provisions set forth in sections 552b(c)(4) and 552b(c)(6), Title 5 U.S.C., as amended. The grant applications and the discussions could disclose

confidential trade secrets or commercial property such as patentable material, and personal information concerning individuals associated with the grant applications, the disclosure of which would constitute a clearly unwarranted invasion of personal privacy.

Name of Committee: National Institute of Arthritis and Musculoskeletal and Skin Diseases Special Emphasis Panel.
Date: February 7, 2001.
Time: 8:30 am to 5 pm.
Agenda: To review and evaluate grant applications.
Place: Bethesda Marriott, 5151 Pooks Hill Rd, Bethesda, MD 20814.
Contact Person: Aftab A. Ansari, PHD, National Institutes of Health, NIAMS, Natcher Building, 45 Center Drive, Room 5AS25N, Bethesda, MD 20892, 301–594–4952.

(Catalogue of Federal Domestic Assistance Program Nos. 93.846, Arthritis, Musculoskeletal and Skin Diseases Research, National Institutes of Health, HHS)

Dated: January 9, 2001.

LaVerne Y. Stringfield,

Director, Office of Federal Advisory Committee Policy.

[FR Doc. 01–1455 Filed 1–17–01; 8:45 am]

BILLING CODE 4140–01–M

DEPARTMENT OF HEALTH AND HUMAN SERVICES

National Institutes of Health

National Institute of Arthritis and Musculoskeletal and Skin Diseases; Notice of Closed Meeting

Pursuant to section 10(d) of the Federal Advisory Committee Act, as amended (5 U.S.C. Appendix 2), notice is hereby given of the following meeting.

The meeting will be closed to the public in accordance with the provisions set forth in sections 552b(c)(4) and 552b(c)(6), Title 5 U.S.C., as amended. The grant applications and the discussions could disclose confidential trade secrets or commercial property such as patentable material, and personal information concerning individuals associated with the grant applications, the disclosure of which would constitute a clearly unwarranted invasion of personal privacy.

Name of Committee: National Institute of Arthritis and Musculoskeletal and Skin Diseases Special Emphasis Panel.
Date: January 22, 2001.
Time: 2:00 pm to 2:30 pm.
Agenda: To review and evaluate grant applications.
Place: 45 Natcher Bldg., Rm 5As25u, Bethesda, MD 20892, (Telephone Conference Call).
Contact Person: Tommy L. Broadwater, PhD, Chief, Grants Review Branch, National Institutes of Health, NIAMS, Natcher Bldg., Room 5As25U, Bethesda, MD 20892, 301–594–4952.

This notice is being published less than 15 days prior to the meeting due to the timing limitations imposed by the review and funding cycle.

(Catalogue of Federal Domestic Assistance Program Nos. 93.846, Arthritis, Musculoskeletal and Skin Diseases Research, National Institutes of Health, HHS)

Dated: January 9, 2001.

LaVerne Y. Stringfield,

Director, Office of Federal Advisory Committee Policy.

[FR Doc. 01–1456 Filed 1–17–01; 8:45 am]

BILLING CODE 4140–01–M

DEPARTMENT OF HEALTH AND HUMAN SERVICES

National Institutes of Health

National Institute of Arthritis and Musculoskeletal and Skin Diseases; Notice of Closed Meeting

Pursuant to section 10(d) of the Federal Advisory Committee Act, as amended (5 U.S.C. Appendix 2), notice is hereby given of the following meeting.

The meeting will be closed to the public in accordance with the provision set forth in sections 552b(c)(4) and 552b(c)(6), Title 5 U.S.C., as amended. The grant applications and the discussions could disclose confidential trade secrets or commercial property such as patentable material, and personal information concerning individuals associated with the grant applications, the disclosure of which would constitute a clearly unwarranted invasion of personal privacy.

Name of Committee: National Institute of Arthritis and Musculoskeletal and Skin Diseases Special Emphasis Panel.
Date: January 10, 2001.
Time: 10:30 am to 12:30 pm.
Agenda: To review and evaluate grant applications.
Place: 45 Natcher Bldg, Rm 5As25u, Bethesda, MD 20892.
Contact Person: Tommy L. Broadwater, PHD, Chief, Grants Review Branch, National Institutes of Health, NIAMS, Natcher Bldg., Room 5As25U, Bethesda, MD 20892, 301–594–4952.

This notice is being published less than 15 days prior to the meeting due to the timing limitations imposed by the review and funding cycle.

(Catalogue of Federal Domestic Assistance Program Nos. 93.846, Arthritis, Musculoskeletal and Skin Diseases Research, National Institutes of Health, HHS)

Dated: January 9, 2001.

LaVerne Y. Stringfield,

Director, Office of Federal Advisory Committee Policy.

[FR Doc. 01–1457 Filed 1–17–01; 8:45 am]

BILLING CODE 4140–01–M

DEPARTMENT OF HEALTH AND HUMAN SERVICES

National Institutes of Health

National Institute of Mental Health; Notice of Closed Meeting

Pursuant to section 10(d) of the Federal Advisory Committee Act, as amended (5 U.S.C. Appendix 2), notice is hereby given of the following meeting.

The meeting will be closed to the public in accordance with the provisions set forth in sections 552b(c)(4) and 552b(c)(6), title 5 U.S.C., as amended. The grant applications and the discussions could disclose confidential trade secrets or commercial property such as patentable material, and personal information concerning individuals associated with the grant applications, the disclosure of which would constitute a clearly unwarranted invasion of personal privacy.

Name of Committee: National Institute of Mental Health, Special Emphasis Panel.
Date: January 29, 20001.
Time: 1 p.m. to 2 p.m.
Agency: To review and evaluate grant applications.
Place: Neuroscience Center, National Institutes of Health, 6001 Executive Blvd., Bethesda, MD 20892, (Telephone Conference Call).
Contact Person: Henry J. Haigler, PhD., Scientific Review Administrator, Division of Extramural Activities, National Institute of Mental Health, NIH, Neuroscience Center, 6001 Executive Blvd., Rm. 6150, MSC 9608, Bethesda, MD 20892–9608, 301/443–7216.

This notice is being published less than 15 days prior to the meeting due to the timing limitations imposed by the review and funding cycle.

(Catalogue of Federal Domestic Assistance Program Nos. 93.242, Mental Health Research Grants; 93.281, Scientist Development Award, Scientist Development Award for Clinicians, and Research Scientist Award; 93.282, Mental Health National Research Service Awards for Research Training, National Institutes of Health, HHS)

Dated: January 9, 2001.

LaVerne Y. Stringfield,

Director, Office of Federal Advisory Committee Policy.

[FR Doc. 01–1460 Filed 1–17–01; 8:45 am]

BILLING CODE 4140–01–M

DEPARTMENT OF HEALTH AND HUMAN SERVICES

National Institutes of Health

National Institute on Drug Abuse; Notice of Closed Meetings

Pursuant to section 10(d) of the Federal Advisory Committee Act, as amended (5 U.S.C. Appendix 2), notice is hereby given of the following meetings.

The meetings will be closed to the public in accordance with the provisions set forth in sections 552b(c)(4) and 552b(c)(6), Title 5 U.S.C., as amended. The contract proposals and the discussions could disclose confidential trade secrets or commercial property such as patentable material, and personal information concerning individuals associated with the contract proposals, the disclosure of which would constitute a clearly unwarranted invasion of personal privacy.

Name of Committee: National Institute on Drug Abuse Special Emphasis Panel, ''Novel Drug Delivery System for the Mouse''.

Date: January 11, 2001.

Time: 11 a.m. to 1 p.m.

Agenda: To review and evaluate contract proposals.

Place: Neuroscience Center, National Institutes of Health, 6001 Executive Blvd., Bethesda, MD 20892, (Telephone Conference Call).

Contact Person: Richard C. Harrison, Chief, Contract Review Branch, Office of Extramural Affairs, National Institute on Drug Abuse, National Institutes of Health, 6001 Executive Boulevard, Room 3158, MSC 9547, Bethesda, MD 20892–9547, 301–435–1437.

This notice is being published less than 15 days prior to the meeting due to the timing limitations imposed by the review and funding cycle.

Name of Committee: National Institute on Drug Abuse, Special Emphasis Panel, ''Chemical Libraries for Drug Development''.

Date: January 18, 2001.

Time: 1 p.m. to 3 p.m.

Agenda: To review and evaluate contract proposals.

Place: Neuroscience Center, National Institutes of Health, 6001 Executive Blvd., Bethesda, MD 20892, (Telephone Conference Call).

Contact Person: Eric Zatman, Contract Review Specialist, Office of Extramural Affairs, National Institute on Drug Abuse, National Institutes of Health, DHHS, 6001 Executive Boulevard, Room 3158, MSC 9547, Bethesda, MD 20892–9547, 301–435–1438.

This notice is being published less than 15 days prior to the meeting due to the timing limitations imposed by the review and funding cycle.

Name of Committee: National Institute on Drug Abuse Special Emphasis Panel, ''Development of Science Education Materials or Programs''.

Date: January 31, 2001.

Time: 9 a.m. to 5 p.m.

Agenda: To review and evaluate contract proposals.

Place: Gaithersburg Marriott Washingtonian Center, 9751 Washingtonian Boulevard, Gaithersburg, MD 20878.

Contact Person: Lyle Furr, Contract Review Specialist, Office of Extramural Affairs, National Institute on Drug Abuse, National Institutes of Health, DHHS, 6001 Executive Boulevard, Room 3158, MSC 9547, Bethesda, MD 20892–9547, 301–435–1439.

(Catalogue of Federal Domestic Assistance Program Nos. 93.277, Drug Abuse Scientist Development Award for Clinicians, Scientist Development Awards, and Research Scientist Awards; 93.278, Drug Abuse National Research Service Awards for Research Training; 93.279, Drug Abuse Research Programs, National Institutes of Health, HHS)

Dated: January 10, 2001.

LaVerne Y. Stringfield,

Director, Office of Federal Advisory Committee Policy.

[FR Doc. 01–1461 Filed 1–17–01; 8:45 am]

BILLING CODE 4140–01–M

DEPARTMENT OF HEALTH AND HUMAN SERVICES

National Institutes of Health

National Institute of Diabetes and Digestive and Kidney Diseases; Notice of Closed Meetings

Pursuant to section 10(d) of the Federal Advisory Committee Act, as amended (5 U.S.C. Appendix 2), notice is hereby given of the following meetings.

The meetings will be closed to the public in accordance with the provisions set forth in sections 552b(c)(4) and 552b(c)(6), Title 5 U.S.C. as amended. The grant applications and the discussions could disclose confidential trade secrets or commercial property such as patentable material, and personal information concerning individuals associated with the grant applications, the disclosure of which would constitute a clearly unwarranted invasion of personal privacy.

Name of Committee: National Institute of Diabetes and Digestive and Kidney Diseases Special Emphasis Panel, ZDK1 GRB–5(C2)B.

Date: January 24, 2001.

Time: 3 p.m. to 5 p.m.

Agenda: To review and evaluate contract proposals.

Place: 2 Democracy Plaza, Room 654, Bethesda, MD 20892, (Telephone Conference Call).

Contact Person: Francisco O. Calvo, PhD., Acting Chief, Review Branch, DEA, NIDDK, Room 655, 6707 Democracy Boulevard, National Institutes of Health, Bethesda, MD 20892–6600, (301) 594–8897.

This notice is being published less than 15 days prior to the meeting due to the timing limitations imposed by the review and funding cycle.

Name of Committee: National Institute of Diabetes and Digestive and Kidney Diseases Special Emphasis Panel, ZDK1 GRB–2(C2)B.

Date: February 15, 2001.

Time: 4 p.m. to 5 p.m.

Agenda: To review and evaluate contract proposals.

Place: 2 Democracy Plaza, 6707 Democracy Boulevard, Room 643, Bethesda, MD 20892, (Telephone Conference Call).

Contact Person: Shan S. Wong, PhD., Scientific Review Administrator, Review Branch, DEA, NIDDK, Room 643, 6707 Democracy Boulevard, National Institutes of Health, Bethesda, MD 20892, (301) 594–7797.

This notice is being published less than 15 days prior to the meeting due to the timing limitations imposed by the review and funding cycle.

Name of Committee: National Institute of Diabetes and Digestive and Kidney Diseases Initial Review Group Diabetes, Endocrinology and Metabolic Diseases B Subcommittee.

Date: March 8–9, 2001.

Time: 8 a.m. to 5 p.m.

Agenda: To review and evaluate grant applications.

Place: Four Points by Sheraton Bethesda, 8400 Wisconsin Avenue, Bethesda, MD 20814.

Contact Person: Michele L. Barnard, PhD., Scientific Review Administrator, Review Branch, DEA, NIDDK, National Institutes of Health, Room 657, 6707 Democracy Boulevard, Bethesda, MD 20892, (301) 594–8898.

(Catalogue of Federal Domestic Assistance Program Nos. 93.847, Diabetes, Endocrinology and Metabolic Research; 93.848, Digestive Diseases and Nutrition Research; 93.849, Kidney Diseases, Urology and Hematology Research, National Institutes of Health, HHS)

Dated: January 10, 2001.

LaVerne Y. Stringfield,

Director, Office of Federal Advisory Committee Policy.

[FR Doc. 01–1462 Filed 1–17–01; 8:45 am]

BILLING CODE 4140–01–M

DEPARTMENT OF HEALTH AND HUMAN SERVICES

National Institutes of Health

National Library of Medicine; Notice of Meeting

Pursuant to section 10(d) of the Federal Advisory Committee Act, as amended (5 U.S.C. Appendix 2), notice is hereby given of a meeting of the Board of Regents of the National Library of Medicine.

The meeting will be open to the public as indicated below, with attendance limited to space available. Individuals who plan to attend and need special assistance, such as sign

language interpretation or other reasonable accommodations, should notify the Contact Person listed below in advance of the meeting.

The meeting will be closed to the public in accordance with the provisions set forth in sections 552b(c)(4) and 552b(c)(6), Title 5 U.S.C., as amended. The grant applications and/or contract proposals and the discussions could disclose confidential trade secrets or commercial property such as patentable material, and personal information concerning individuals associated with the grant applications and/or contract proposals, the disclosure of which would constitute a clearly unwarranted invasion of personal privacy.

Name of Committee: Board of Regents of the National Library of Medicine.

Date: February 27–28, 2001.

Open: February 27, 2001, 9:00 am to 4:40 pm.

Agenda: Administrative Reports and Program Discussion.

Place: National Library of Medicine, Board Room, Bldg 38, 2E–09, 8600 Rockville Pike, Bethesda, MD 20894.

Closed: February 27, 2001, 4:40 pm to 5:00 pm.

Agenda: To review and evaluate grant applications.

Place: National Library of Medicine, Board Room, Bldg 38, 2E–09, 8600 Rockville Pike, Bethesda, MD 20894.

Open: February 28, 2001, 9:15 am to 11:30 am.

Agenda: Administrative Reports and Program Discussion.

Place: National Library of Medicine, Board Room, Bldg 38, 2E–09, 8600 Rockville Pike, Bethesda, MD 20894.

Contact Person: Donald A.B. Lindberg, MD, Director, National Library of Medicine, National Institutes of Health, PHS, DHHS, Bldg 38, Room 2E17B, Bethesda, MD 20894.

(Catalogue of Federal Domestic Assistance Program Nos. 93.879, Medical Library Assistance, National Institutes of Health, HHS)

Dated: January 9, 2001.

LaVerne Y. Stringfield,

Director, Office of Federal Advisory Committee Policy.

[FR Doc. 01–1458 Filed 1–17–01; 8:45 am]

BILLING CODE 4140–01–M

DEPARTMENT OF HEALTH AND HUMAN SERVICES

National Institutes of Health

Prospective Grant of Exclusive License: Method for Preparing 17α-Acetoxy-11β-(4-,N-Dimethylaminophyl)-19-Norpregna-4, 9-Diene-3,20-Dione, Intermediates Useful in the Method, and Methods for the Preparation of Such Intermediates

AGENCY: National Institutes of Health, Public Health Service, DHHS.

ACTION: Notice.

SUMMARY: This is notice, in accordance with 35 U.S.C. 209(c)(1) and 37 CFR 404.7(a)(1)(i), that the National Institutes of Health (NIH), Department of Health and Human Services, is contemplating the grant of an exclusive license worldwide to practice the invention embodied in: U.S. Patent Application Serial No. 08/413,755, filed March 30, 1995, issuing as U.S. Patent 5,929,262 entitled, ''Method for Preparing 17α-Acetoxy-11β-(4-N,N-Dimethylaminophyl)-19-Norpregna-4, 9-Diene-3,20-Dione, Intermediates Useful in the Method, and Methods for the Preparation of such Intermediates'' to HRA Pharma, a corporation of France, having a place of business in Paris, France. The patent rights in this invention have been assigned to the United States of America, as represented by the Department of Health and Human Services.

DATES: Only written comments and/or application for a license which are received by the NIH Office of Technology Transfer on or before April 18, 2001 will be considered.

ADDRESSES: Requests for a copy of the patent applications, inquiries, comments and other materials relating to the contemplated license should be directed to: Dennis H. Penn, Pharm.D., Technology Licensing Specialist, Office of Technology Transfer, National Institutes of Health, 6011 Executive Boulevard, Suite 325, Rockville, MD 20852–3804; Telephone: (301) 496–7056, ext. 211; Facsimile: (301) 402–0220.

SUPPLEMENTARY INFORMATION: In an effort to develop an efficacious treatment for human reproductive disorders this invention describes methods for the synthesis of 17α-Acetoxy-11β-(4-N,N-Dimethylaminophyl)-19-Norpregna-4,9-Diene-3,20-Dione Intermediates Useful in the Method, and Methods for the Preparation of such Intermediates This compound may have utility in treating human reproductive disorders and hormone sensitive tumors.

The prospective exclusive license will be royalty-bearing and will comply with the terms and conditions of 35 U.S.C. 209 and 37 CFR 404.7. The prospective exclusive license may be granted unless, within 90 days from the date of this published Notice, NIH received written evidence and argument that establishes that the grant of the license would not be consistent with the requirements of 35 U.S.C. 209 and 37 CFR 404.7.

The field of use may be limited to the use of the invention for the synthesis 17α-Acetoxy-11β-(4-N,N-Dimethylaminophyl)-19-Norpregna-4, 9-Diene-3,20-Dione and intermediates useful in the method of synthesis and preparation of such intermediates.

Properly filed competing applications for a license filed in response to this notice will be treated as objections to the contemplated license. Comments and objections submitted in response to this notice will not be made available for public inspection, and, to the extent permitted by law, will not be released under the Freedom of Information Act, 5 U.S.C. 552.

Dated: January 8, 2001.

Jack Spiegel,

Director, Division of Technology Development and Transfer, Office of Technology Transfer.

[FR Doc. 01–1465 Filed 1–17–01; 8:45 am]

BILLING CODE 4140–01–M

DEPARTMENT OF HEALTH AND HUMAN SERVICES

National Institutes of Health

Prospective Grant of Exclusive License: Orally Active Derivatives of 1,3,5(10)-Estratriene

AGENCY: National Institutes of Health, Public Health Service, DHHS.

ACTION: Notice.

SUMMARY: This is notice, in accordance with 35 U.S.C. 209(c)(1) and 37 CFR 404.7(a)(1)(i), that the National Institutes of Health (NIH), Department of Health and Human Services, is contemplating the grant of an exclusive license worldwide to practice the invention embodied in: U.S. Patent Application Series No. 08/122,853, filed September 17, 1993, issuing as U.S. Patent 5,554,603 on September 10, 1996 entitled, ''Orally Active Derivatives of 1,3,5(10)-Estratriene'' to the R.W. Johnson Pharmaceutical Research Institute, a corporation of Delaware, having a place of business in Raritan, New Jersey. The patent rights in this invention have been assigned to the

United States of America, as represented by the Department of Health and Human Services.

DATES: Only written comments and/or application for a license which are received by the NIH Office of Technology Transfer on or before March 19, 2001 will be considered.

ADDRESSES: Requests for a copy of the patent applications, inquiries, comments and other materials relating to the contemplated license should be directed to: Dennis H. Penn, Pharm.D., Technology Licensing Specialist, Office of Technology Transfer, National Institutes of Health, 6011 Executive Boulevard, Suite 325, Rockville, MD 20852–3804; Telephone: (301) 496–7056, ext. 211; Facsimile: (301) 402–0220.

SUPPLEMENTARY INFORMATION: In an effort to develop an efficacious treatment for human reproductive disorders this invention describes orally active derivatives of 1,3,5(10)-estratriene. This compound may have utility as a contraceptive and as an estrogen replacement for the treatment and prevention of postmenopausal conditions.

The prospective exclusive license will be royalty-bearing and will comply with the terms and conditions of 35 U.S.C. 209 and 37 CFR 404.7. The prospective exclusive license may be granted unless, within 60 days from the date of this published Notice, NIH received written evidence and argument that establishes that the grant of the license would not be consistent with the requirements of 35 U.S.C. 209 and 37 CFR 404.7.

The field of use may be limited to the use of the invention for the development of pharmaceutical compounds for use as a contraceptive and for treatment and prevention of postmenopausal conditions.

Properly filed competing applications for a license filed in response to this notice will be treated as objections to the contemplated license. Comments and objections submitted in response to this notice will not be made available for public inspection, and, to the extent permitted by law, will not be released under the Freedom of Information Act, 5 U.S.C. 552.

Dated: January 8, 2001.

Jack Spiegel,

Director, Division of Technology Development and Transfer, Office of Technology Transfer.

[FR Doc. 01–1464 Filed 1–17–01; 8:45 am]

BILLING CODE 4140–01–M

DEPARTMENT OF HEALTH AND HUMAN SERVICES

National Institutes of Health

Prospective Grant of Exclusive License: Prophylactic and/or Therapeutic Vaccine Against Pseudomonas Aeruginosa, Chlamydia, Trachomatis and Mycoplasma Pneumonia

AGENCY: National Institutes of Health, Public Health Service, DHHS.

ACTION: Notice.

SUMMARY: This is notice in accordance with 15 U.S.C. 209(c)(1) and 37 CFR 404.7(a)(1)(i) that the National Institutes of Health (NIH), Department of Health and Human Services, is contemplating the grant of a limited field of use exclusive worldwide license to practice the inventions embodied in U.S. Serial Number 09/462,682, filed January 10, 2000 (claiming priority to U.S. Provisional Patent Application Serial No. 60/052,375, filed July 11, 1997), entitled ''Pseudomonas exotaxin A-Like Chimeric Immunogens'' and U.S. Serial Number 09/462,713 filed May 12, 2000 (claiming priority to U.S. Provisional Patent Application Serial No. 60/056,924, filed July 11, 1997), entitled ''Pseudomonas Exotoxin A-like Chimera Immunogens for eliciting a secretory IgA-Mediated Immune Response'' to Trinity BioSystems, L.L.C. of Los Altos Hills, California, U.S.A. The United States as represented by the Department of Health and Human Services is an assignee of these patent rights.

DATES: Only written comments and/or applications for a license which are received by NIH on or before March 19, 2001 will be considered.

ADDRESSES: Requests for a copy of these patent applications, inquiries, comments, and other materials relating to the contemplated license should be directed to: Carol A. Salata, Technology Licensing Specialist, Office of Technology Transfer, National Institutes of Health, 6011 Executive Boulevard, Suite 325, Rockville, MD 20852–3804; Telephone: (301) 496–7735 ext. 232; Facsimile: (301) 402–0220; E-mail: salatac@OD.NIH.GOV. A signed Confidential Disclosure Agreement (CDA) may be required to receive copies of the patent applications.

SUPPLEMENTARY INFORMATION: The patent applications describe the use of Pseudomonas exotoxin A-like chimeric immunogens in which a non-native epitope is inserted into a domain. These immunogens are useful to elicit humoral, cell-mediated and mucosal immune responses against the non-native epitope.

The prospective exclusive license will be royalty-bearing and will comply with the terms and conditions of 35 U.S.C. 209 and 37 CFR 404.7.

It is anticipated that this license may be limited to the field of use as a prophylactic and/or therapeutic vaccine against Pseudomonas aeruginosa, Chlamydia trachomatis and Mycoplasma pneumoniae. Trinity BioSystems will use Pseudomonas exotoxin A to target and deliver pathogen peptide epitopes wherein said pathogen peptide epitopes are inserted into or replace a domain of Pseudomonas exotoxin A.

This propsective exclusive license may be granted unless within 60 days from the date of this published notice, NIH receives written evidence and argument that establishes that the grant of the license would not be consistent with the requirements of 35 U.S.C. 209 and 37 CFR 404.7.

Applications for a license filed in response to this notice will be treated as objections to the grant of the contemplated license. Comments and objections submitted in response to this notice will not be made available for public inspection, and, to the extent permitted by law, will not be released under the Freedom of Information Act, 5 U.S.C. 552.

Dated: January 8, 2001.

Jack Spiegel,

Director, Division of Technology Development and Transfer, Office of Technology Transfer.

[FR Doc. 01–1463 Filed 1–17–01; 8:45 am]

BILLING CODE 4140–01–M

DEPARTMENT OF HEALTH AND HUMAN SERVICES

Substance Abuse and Mental Health Services Administration

Office for Women's Services; Notice of Meeting

Pursuant to Public Law 92–463, notice is hereby given of the meeting of the Advisory Committee for Women's Services of the Substance Abuse and Mental Health Services Administration (SAMHSA) on Friday January 26, 2001.

The meeting of the Advisory Committee for Women's Services will include a discussion of policy and program issues relating to women's substance abuse and mental health service needs; the SAMHSA fiscal year 2001 budget; specific Committee goals for the current year, planning discussions for SAMHSA's Third National Conference on Women,

consideration of the September 29, 2000 meeting minutes; and other policy issues.

A summary of the meeting and/or a roster of committee members may be obtained from: Nancy P. Brady, Executive Secretary, Advisory Committee for Women's Services, Office for Women's Services, SAMHSA, Parklawn Building, Room 13–99, 5600 Fishers Lane, Rockville, Maryland 20857, Telephone: (301) 443–5184.

Substantive information may be obtained from the contact whose name and telephone number is listed below.

Committee Name: Advisory Committee for Women's Services.

Meeting Date(s): Friday January 26, 2001.

Meeting Time: 2:30–5:00 p.m.

Place: 5600 Fishers Lane, Parklawn Building Room 16–105, Rockville, MD 20857.

Open: January 26, 2001.

Contact: Nancy P. Brady, Room 13–99, Parklawn Building, Telephone: (301) 443–8964.

Dated: January 8, 2001.

Toian Vaughn,

Committee Management Officer, Substance Abuse and Mental Health Services Administration.

[FR Doc. 01–1389 Filed 1–17–01; 8:45 am]

BILLING CODE 4162–20–P

DEPARTMENT OF HOUSING AND URBAN DEVELOPMENT

[Docket No. FR–4651N–01]

Proposed Information Collection, Comment Request, Economic Opportunities for Low- and Very Low-Income Persons

AGENCY: Office of the Assistant Secretary for Fair Housing and Equal Opportunity, HUD.

ACTION: Notice

SUMMARY: The proposed information collection requirement concerning the Section 3 program will be submitted to the Office of Management and Budget (OMB) for review, as required by the Paperwork Reduction Act. The Department is soliciting public comments on the subject proposal.

DATES: *Comment Due Date:* March 19, 2001.

ADDRESSES: Interested persons are invited to submit comments regarding this proposal. Comments should refer to the proposal by name and/or OMB Control Number and should be sent to: Valerie T. Hayes, Department of Housing and Urban Development, 451 7th Street, SW., Room 5235, Washington, DC 20410. Telephone number (202) 708–3633.

FOR FURTHER INFORMATION CONTACT: Valerie T. Hayes, Department of Housing and Urban Development, 451 7th Street, SW, Washington, DC 20410, telephone (202) 708–3633. (This is not a toll-free number). Hearing or speech-impaired individuals may access this number TTY by calling the toll-free Federal Information Relay Service at 1–800–877–8399.

SUPPLEMENTARY INFORMATION: The Department is submitting the proposed information collection to OMB for review, as required by the Paperwork Reduction Act of 1995 (44 U.S.C. Chapter 34, as amended).

This Notice is soliciting comments from members of the public and affecting agencies concerning the proposed collection of information to: (1) Evaluate whether the proposed collection of information is necessary for the proper performance of the functions of the agency, including whether the information will have practical utility; (2) Evaluate the accuracy of the agency's estimate of the burden of the proposed collection of information; (3) Enhance the quality, utility, and clarity of the information to be collected; and (4) Minimize the burden of the collection of information of information on those who are to respond; including through the use of appropriate automated collection techniques or other forms of information technology, *e.g.,* permitting electronic submission of responses.

Notice of Submission of Proposed Information Collection to OMB

Title of Proposal: Economic Opportunity for Low- and Very Low-Income Persons *Office:* Fair Housing and Equal Opportunity.

OMB Control Number: 2529–0043.

Description of the need for the information and proposed use: The information will be used by the Department to monitor program recipients' compliance with Section 3. HUD Headquarters will use the information to assess the results of the Department's efforts to meet the statutory objectives of Section 3. Also, the data collected will be used by recipients as a self-monitoring tool. If the information is not collected, HUD will be unable to prepare the mandatory reports to Congress or to assess the effectiveness of Section 3.

Agency form numbers, if applicable: Form HUD 60002 and HUD 958.

Members of affected public: State and local governments or their agencies, public and private non-profit organizations, or other public entities.

Estimation of the total numbers of hours needed to prepare the information collection including number of respondents, frequency of response, and hours of response: On an annual basis approximately 58,594 respondents (HUD recipients) will submit one report to HUD. It is estimated that two hours per annual reporting period will be required of the recipients to prepare the Section 3 report for a total of 117,186 hours.

Status of the proposed information collection: Reinstatement of a currently approved collection to reflect the collection of information from HUD recipients.

Authority: The Paperwork Reduction Act of 1995, 44 U.S.C. Chapter 35, as amended.

Dated: January 8, 2001.

John H. Waller,

Deputy Assistant Secretary for Economic Development.

[FR Doc. 01–1402 Filed 1–17–01; 8:45 am]

BILLING CODE 4210–28–M

DEPARTMENT OF HOUSING AND URBAN DEVELOPMENT

[Docket No. FR–4655–N–01]

Proposed Information Collection: Comment Request—Recertification of Family Income, Composition and Statistical Report—Section 235(b) and Section 234(b), (i), and (j)

AGENCY: Office of the Assistant Secretary for Housing, HUD.

ACTION: Notice.

SUMMARY: The proposed information collection requirement described below will be submitted to the Office of Management and Budget (OMB) for review, as required by the Paperwork Reduction Act. The Department is soliciting public comments on the subject proposal.

DATES: *Comments Due Date:* March 19, 2001.

ADDRESSES: Interested persons are invited to submit comments regarding this proposal. Comments should refer to the proposal by name and/or OMB Control Number and should be sent to: Wayne Eddins, Reports Management Officer, Department of Housing and Urban Development, 451 7th Street, SW., L'Enfant Plaza Building, Room 8001, Washington, DC 20410.

FOR FURTHER INFORMATION CONTACT: Joseph McCloskey, Director, Office of Single Family Asset Management, Department of Housing and Urban Development, 451 7th Street SW.,

Washington, DC 20410, telephone (202) 708–1672 (this is not a toll free number) for copies of the proposed forms and other available information.

SUPPLEMENTARY INFORMATION: The Department is submitting the proposed information collection to OMB for review, as required by the Paperwork Reduction Act of 1955 (44 U.S.C. Chapter 35, as amended).

This Notice is soliciting comments from members of the public and affected agencies concerning the proposed collection of information to: (1) Evaluate whether the proposed collection is necessary for the proper performance of the functions of the agency, including whether the information will have practical utility; (2) Evaluate the accuracy of the agency's estimate of the burden of the proposed collection of information; (3) Enhance the quality, utility, and clarity of the information to be collected; and (4) Minimize the burden of the collection of information on those who are to respond; including the use of appropriate automated collection techniques or other forms of information technology, *e.g.*, permitting electronic submission of responses.

This Notice also lists the following information:

Title of Proposal: Recertification of Family Income and Composition.

OMB Control Number, if applicable: 2502–0082.

Description of the need for the information and propose use: Housing Programs, Housing Subsidy, Recertification of forms HUD–93101 and 93101A are submitted by homeowners to mortgagees to determine their continued eligibility for assistance and to determine the amount of assistance a homeowner is to receive. The forms are also used by mortgagees to report statistical and general program data to HUD.

Agency form numbers, if applicable: HUD–93101 and HUD–93101A.

Estimation of the total numbers of hours needed to prepare the information collection including number of respondents, frequency of response, and hours of response: The number of respondents is 77,265; the frequency of responses are on occasion, monthly, and annually; estimated time to prepare collection is 1.25 hours per response; and the total annual burden hours requested are 96,581.

Status of the proposed information collection: Reinstatement without change.

Authority: The Paperwork Reduction Act of 1995, 44 U.S.C., Chapter 35, as amended.

Dated: January 12, 2001.

William C. Apgar,

Assistant Secretary for Housing—FHA.

[FR Doc. 01–1540 Filed 1–17–01; 8:45 am]

BILLING CODE 4210–27–M

DEPARTMENT OF HOUSING AND URBAN DEVELOPMENT

[Docket No. FR–4650–N–02]

Notice of Submission of Proposed Information Collection to OMB; Mortgagee's Application for Partial Settlement (Multifamily Mortgage)

AGENCY: Office of the Chief Information Officer, HUD.

ACTION: Notice.

SUMMARY: The proposed information collection requirement described below has been submitted to the Office of Management and Budget (OMB) for review, as required by the Paperwork Reduction Act. The Department is soliciting public comments on the subject proposal.

DATES: *Comments Due Date:* February 20, 2001.

ADDRESSES: Interested persons are invited to submit comments regarding this proposal. comments should refer to the proposal by name and/or OMB approval number (2502–0427) and should be sent to: Joseph F. Lackey, Jr., OMB Desk Officer, Office of Management and Budget, Room 10235, New Executive Office Building, Washington, DC 20503.

FOR FURTHER INFORMATION CONTACT: Wayne Eddins, Reports Management Officer, Q, Department of Housing and Urban Development, 451 Seventh Street, Southwest, Washington, DC 20410; e-mail Wayne_Eddins@HUD.gov; telephone (202) 708–2374. This is not a toll-free number. Copies of the proposed forms and other available documents submitted to OMB may be obtained from Mr. Eddins.

SUPPLEMENTARY INFORMATION: The Department has submitted the proposal for the collection of information, as described below, to OMB for review, as required by the Paperwork Reduction Act (44 U.S.C. Chapter 35). The Notice lists the following information: (1) The title of the information collection proposal; (2) the office of the agency to collect the information; (3) the OMB approval number, if applicable; (4) the description of the need for the information and its proposed use; (5) the agency form number, if applicable; (6) what members of the public will be affected by the proposal; (7) how frequently information submissions will be required; (8) an estimate of the total number of hours needed to prepare the information submission including number of respondents, frequency of response, and hours of response; (9) whether the proposal is new, an extension, reinstatement, or revision of an information collection requirement; and (10) the name and telephone number of an agency official familiar with the proposal and of the OMB Desk Officer for the Department.

This Notice Also Lists the Following Information

Title of Proposal: Mortgagee's Application for Partial Settlement (Multifamily Mortgage).

OMB Approval Number: 2502–0427.

Form Numbers: HUD–2537.

Description of the Need for the Information and Its Proposed Use: When a FHA insured multifamily mortgage goes into default, the mortgagee may file a claim to receive insurance benefits. HUD Form 2537 provides required data to process a partial claim payment within 24 to 48 hours after assignment or conveyance of a multifamily mortgage.

Respondents: Business or other-for-profit, State, Local or Tribal Government.

Frequency of Submission: On occasion.

Reporting Burden:

Number of respondents	×	Frequency of response	×	Hours per response	=	Burden hours
215		1		3.98		54

Total Estimated Burden Hours: 54.

Status: Reinstatement, without change.

Authority: Section 3507 of the Paperwork Reduction Act of 1995, 44 U.S.C. 35, as amended.

Dated: January 9, 2001.

Wayne Eddins,

Departmental Reports Management Officer, Office of the Chief Information Officer.

[FR Doc. 01–1399 Filed 1–17–01; 8:45 am]

BILLING CODE 4210–01–M

DEPARTMENT OF HOUSING AND URBAN DEVELOPMENT

[Docket No. FR–4650–N–03]

Submission of Proposed Information Collection to OMB—Application for FHA Insured Mortgage (Addendum to Unoform Residential Loan Application/ Mortgage Credit Analysis Worksheet)

AGENCY: Office of the Chief Information Officer, HUD.

ACTION: Notice.

SUMMARY: The proposed information collection requirement described below has been submitted to the Office of Management and Budget (OMB) for review, as required by the Paperwork Reduction Act. The Department is soliciting public comments on the subject proposal.

DATES: *Comments Due Date:* February 20, 2001.

ADDRESSES: Interested persons are invited to submit comments regarding this proposal. Comments should refer to the proposal by name and/or OMB approval number (2502–0059) and should be sent to: Joseph F. Lackey, Jr., OMB Desk Officer, Office of Management and Budget, Room 10235, New Executive Office Building, Washington, DC 20503.

FOR FURTHER INFORMATION CONTACT: Wayne Eddins, Reports Management Officer, Q, Department of Housing and Urban Development, 451 Seventh Street, Southwest, Washington, DC 20410; e-mail Wayne_Eddins@HUD.gov; telephone (202) 708–2374. This is not a toll-free number. Copies of the proposed forms and other available documents submitted to OMB may be obtained from Mr. Eddins.

SUPPLEMENTARY INFORMATION: The Department has submitted the proposal for the collection of information, as described below, to OMB for review, as required by the Paperwork Reduction Act (44 U.S.C. Chapter 35). The Notice lists the following information: (1) The title of the information collection proposal; (2) the office of the agency to collect the information; (3) the OMB approval number, if applicable; (4) the description of the need for the information and its proposed use; (5) the agency form number, if applicable; (6) what members of the public will be affected by the proposal; (7) how frequently information submissions will be required; (8) an estimate of the total number of hours needed to prepare the information submission including number of respondents, frequency of response, and hours of response; (9) whether the proposal is new, an extension, reinstatement, or revision of an information collection requirement; and (10) the name and telephone number of an agency official familiar with the proposal and of the OMB Desk Officer for the Department.

This Notice also lists the following information:

Title of Proposal: Application for FHA Insured Mortgage (Addendum to Unoform Residential Loan Application/ Mortgage Credit Analysis Worksheet).

OMB Approval Number: 2502–0059.

Form Numbers: HUD–92900—A, HUD–92900–B, HUD–92900–WS, HUD–92900–PUR, HUD–92561, HUD–92544.

Description of the Need for the Information and Its Proposed Use: This application for an FHA insured mortgage, an addendum to Uniform Residential Loan Application (URLA) and related documents are needed to determine, the eligibility of the borrower and proposed mortgage transaction for FHA's insurance endorsement. This information is submitted by lenders seeking FHA's insurance endorsement.

Respondents: Application for benefits, Audit.

Frequency of Submission: On occasion.

Reporting Burden:

Number of respondents	×	Frequency of response	×	Hours per response	=	Burden hours
1,000,000		1		0.23		235,025

Total Estimated Burden Hours: 235,025.

Status: Reinstatement, without change.

Authority: Section 3507 of the Paperwork Reduction Act of 1995, 44 U.S.C. 35, as amended.

Dated: January 9, 2001.

Wayne Eddins,

Departmental Reports Management Officer, Office of the Chief Information Officer.

[FR Doc. 01–1400 Filed 1–17–01; 8:45am]

BILLING CODE 4210–01–M

DEPARTMENT OF HOUSING AND URBAN DEVELOPMENT

[Docket No. FR–4650–N–04]

Submission of Proposed Information Collection to OMB—Lender Qualifications for Multifamily Accelerated Processing (Map)

AGENCY: Office of the Chief Information Officer, HUD.

ACTION: Notice.

SUMMARY: The proposed information collection requirement described below has been submitted to the Office of Management and Budget (OMB) for review, as required by the Paperwork Reduction Act. The Department is soliciting public comments on the subject proposal.

DATES: *Comment Due Date:* February 20, 2001.

ADDRESSES: Interested persons are invited to submit comments regarding this proposal. Comments should refer to the proposal by name and/or OMB approval number (2502–0541) and should be sent to: Joseph F. Lackey, Jr., OMB Desk Officer, Office of Management and Budget, Room 10235, New Executive Office Building, Washington, DC 20503.

FOR FURTHER INFORMATION CONTACT: Wayne Eddins, Reports Management Officer, Q, Department of Housing and Urban Development, 451 Seventh Street, Southwest, Washington, DC 20410; e-mail Wayne_Eddins@HUD.gov; telephone (202) 708–2374. This is not a toll-free number. Copies of the proposed forms and other available documents

submitted to OMB may be obtained from Mr. Eddins.

SUPPLEMENTARY INFORMATION: The Department has submitted the proposal for the collection of information, as described below, to OMB for review, as required by the Paperwork Reduction Act (44 U.S.C. Chapter 35). The Notice lists the following information: (1) The title of the information collection proposal; (2) the office of the agency to collect the information; (3) the OMB approval number, if applicable; (4) the description of the need for the information and its proposed use; (5) the agency form number, if applicable; (6) what members of the public will be affected by the proposal; (7) how frequently information submissions will be required; (8) an estimate of the total number of hours needed to prepare the information submission including number of respondents, frequency of response, and hours of response; (9) whether the proposal is new, an extension, reinstatement, or revision of an information collection requirement; and (10) the name and telephone number of an agency official familiar with the proposal and of the OMB Desk Officer for the Department.

This Notice also list the following information:

Title of Proposal: Lender Qualifications for Multifamily Accelerated Processing (MAP).

OMB Approval Number: 2502–0541.

Form Numbers: None.

Description of the Need for the Information and its Proposed Use: To participate in MAP, lenders will be required to show that they have an experienced multifamily underwriter on staff, and that they have a satisfactory record on lending on multifamily housing properties. Qualified lenders can then take advantage of a mortgage application plan that will take substantially less processing.

Respondents: Business or other-for-profit.

Frequency of Submission: On occasion.

Reporting Burden:

Number of respondents	×	Frequency of response	×	Hours of per response	=	Burden hours
130		1		10		1,300

Total Estimated Burden Hours: 1,300.

Status: Reinstatement, without change.

Authority: Section 3507 of the Paperwork Reduction Act of 1995, 44 U.S.C. 35, as amended.

Dated: January 9, 2000.

Wayne Eddins,

Departmental Reports Management Officer, Office of the Chief Information Officer.

[FR Doc. 01–1401 Filed 1–17–01; 8:45 am]

BILLING CODE 4210–01–M

DEPARTMENT OF HOUSING AND URBAN DEVELOPMENT

[Docket No. FR–4650–N–05]

Submission of Proposed Information Collection to OMB—Certificate of Need for Health Facility and Assurance of Enforcement of State Standards

AGENCY: Office of the Chief Information Officer, HUD.

ACTION: Notice.

SUMMARY: The proposed information collection requirement described below has been submitted to the Office of Management and Budget (OMB) for review, as required by the Paperwork Reduction Act. The Department is soliciting public comments on the subject proposal.

DATES: *Comments Due Date:* February 20, 2001.

ADDRESSES: Interested persons are invited to submit comments regarding this proposal. Comments should refer to the proposal by name and/or OMB approval number (2502–0210) and should be sent to: Joseph F. Lackey, Jr., OMB Desk Officer, Office of Management and Budget, Room 10235, New Executive Office Building, Washington, DC 20503.

FOR FURTHER INFORMATION CONTACT: Wayne Eddins, Reports Management Officer, Q, Department of Housing and Urban Development, 451 Seventh Street, Southwest, Washington, DC 20410; e-mail Wayne_Eddins@HUD.gov; telephone (202) 708–2374. This is not a toll-free number. Copies of the proposed forms and other available documents submitted to OMB may be obtained from Mr. Eddins.

SUPPLEMENTARY INFORMATION: The Department has submitted the proposal for the collection of information, as described below, to OMB for review, as required by the Paperwork Reduction Act (44 U.S.C. Chapter 35). The Notice lists the following information: (1) The title of the information collection proposal; (2) the office of the agency to collection the information; (3) the OMB approval number, if applicable; (4) the description of the need for the information and its proposed use; (5) the agency form number, if applicable; (6) what members of the public will be affected by the proposal; (7) how frequently information submissions will be required; (8) an estimate of the total number of hours needed to prepare the information submission including number of respondents, frequency of response, and hours of response; (9) whether the proposal is new, an extension, reinstatement, or revision of an information collection requirement; and (10) the name and telephone number of an agency official familiar with the proposal and of the OMB Desk Officer for the Department.

This Notice also lists the following information:

Title of Proposal: Certificate of Need for Health Facility and Assurance of Enforcement of State Standards.

OMB Approval Number: 2502–0210.

Form Numbers: HUD–2576–HF.

Description of the Need for the Information and its Proposed Use: Certificate of Need is used to comply with Sections 232 of the National Housing Act for Nursing Homes, and Intermediate Care Facilities, which requires the State to execute the HUD Form 2576–HF through and approved Lender in order to obtain an insured loan.

Respondents: Business or other- for-profit.

Frequency of Submission: On occasion.

Reporting Burden:

Number of respondents	×	Frequency of response	×	Hours per response	=	Burden hours
50		1		0.2		10

Total Estimated Burden Hours: 10.

Status: Reinstatement, without change.

Authority: Section 3507 of the Paperwork Reduction Act of 1995, 44 U.S.C. 35, as amended.

Dated: January 10, 2001.

Wayne Eddins,

Departmental Reports Management Officer, Office of the Chief Information Officer.

[FR Doc. 01–1539 Filed 1–17–01; 8:45 am]

BILLING CODE 4210–01–M

DEPARTMENT OF HOUSING AND URBAN DEVELOPMENT

[Docket No. FR–4650–N–06]

Submission of Proposed Information Collection to OMB—Public and Indian Housing Drug Elimination Technical Assistance Program (DETAP) Consultant Services—Application Kit

AGENCY: Office of the Chief Information Officer, HUD.

ACTION: Notice.

SUMMARY: The proposed information collection requirement described below has been submitted to the Office of Management and Budget (OMB) for review, as required by the Paperwork Reduction Act. The Department is soliciting public comments on the subject proposal.

DATES: *Comments Due Date:* February 20, 2001.

ADDRESSES: Interested persons are invited to submit comments regarding this proposal. Comments should refer to the proposal by name and/or OMB approval number (2577–0133) and should be sent to: Joseph F. Lackey, Jr., OMB Desk Officer, Office of Management and Budget, Room 10235, New Executive Office Building, Washington, DC 20503.

FOR FURTHER INFORMATION CONTACT: Wayne Eddins, Reports Management Officer, Q, Department of Housing and Urban Development, 451 Seventh Street, Southwest, Washington, DC 20410; e-mail Wayne_Eddins@HUD.gov; telephone (202) 708–2374. This is not a toll-free number. Copies of the proposed forms and other available documents submitted to OMB may be obtained from Mr. Eddins.

SUPPLEMENTARY INFORMATION: The Department has submitted the proposal for the collection of information, as described below, to OMB for review, as required by the Paperwork Reduction Act (44 U.S.C. Chapter 35). The Notice lists the following information: (1) The title of the information collection proposal; (2) the office of the agency to collect the information; (3) the OMB approval number, if applicable; (4) the description of the need for the information and its proposed use; (5) the agency form number, if applicable; (6) what members of the public will be affected by the proposal; (7) how frequently information submissions will be required; (8) an estimate of the total number of hours needed to prepare the information submission including number of respondents, frequency of response, and hours of response; (9) whether the proposal is new, an extension, reinstatement, or revision of an information collection requirement; and (10) the name and telephone number of an agency official familiar with the proposal and of the OMB Desk Officer for the Department.

This Notice also lists the following information:

Title of Proposal: Public and Indian Housing Drug Elimination Technical Assistance Program (DETAP) Consultant Services-Application Kit.

OMB Approval Number: 2577–0133.

Form Numbers: HUD–52354.

Description of the Need for the Information and its Proposed Use: Eligible applicants will submit information under the SuperNOFA for the Drug Elimination Technical Assistance Program (DETAP). HUD will review and evaluate the information against ranking factors contained in the SuperNOFA for possible funding. Applicants will be notified of their selection/rejection.

Respondents: Not-for-profit institutions, State, Local or Tribal Government.

Frequency of Submission: Annually.

Reporting Burden:

Number of respondents	×	Frequency of response	×	Hours per response	=	Burden hours
1,500		1		20		30,000

Total Estimated Burden Hours: 30,000.

Status: Reinstatement, without change.

Authority: Section 3507 of the Paperwork Reduction Act of 1995, 44 U.S.C. 35, as amended.

Dated: January 11, 2001.

Wayne Eddins,

Departmental Reports Management Officer, Office of the Chief Information Officer.

[FR Doc. 01–1541 Filed 1–17–01; 8:45 am]

BILLING CODE 4210–01–M

DEPARTMENT OF HOUSING AND URBAN DEVELOPMENT

[Docket No. FR–4638–N–02]

Notice of Certain Operating Cost Adjustment Factors

AGENCY: Office of the Secretary, HUD.

ACTION: Publication of Fiscal Year (FY) 2001 Operating Cost Adjustment Factors (OCAFs) for Section 8 rent adjustments at contract renewal under section 524 of the Multifamily Assisted Housing Reform and Affordability Act of 1997 (MAHRA), as amended by the Preserving Affordable Housing for Senior Citizens and Families into the 21st Century Act of 1999, and under the Low-Income Housing Preservation and Resident Homeownership Act of 1990 (LIHPRHA) Projects assisted with Section 8 Housing Assistance Payments.

SUMMARY: This notice that establishes factors used in calculating rent adjustments under section 524 of the Multifamily Assisted Housing Reform and Affordability Act of 1997 (MAHRA) as amended by the Preserving Affordable Housing for Senior Citizens and Families into the 21st Century Act of 1999, and under the Low-Income Housing Preservation and Resident Homeownership Act of 1990 (LIHPRHA), was published on January 10, 2001, but the appendix to the notice was inadvertently not published. This notice is therefore republished with the appendix.

EFFECTIVE DATE: January 10, 2001.

FOR FURTHER INFORMATION CONTACT: Willie Spearmon, Director, Office of Housing Assistance and Grant Administration, Department of Housing and Urban Development, 451 Seventh Street, SW, Washington, DC 20410; telephone (202) 708–3000; (This is not a toll-free number). Hearing or speech-impaired individuals may access this number via TTY by calling the toll-free Federal Information Relay Service at 1–800–877–8339.

SUPPLEMENTARY INFORMATION:

This notice was originally published on January 10, 2001 (66 FR 1997), but

the appendix to the notice was inadvertently not published. This notice is therefore republished with the appendix.

I. Operating Cost Adjustment Factors (OCAFs)

Section 514(e)(2) of the FY 1998 HUD Appropriations Act requires HUD to establish guidelines for rent adjustments based on an operating cost adjustment (OCAF) factor. The legislation requiring HUD to establish OCAFs for LIHPRHA projects and projects with contract renewals under section 524 of MAHRA is similar in wording and intent. HUD has therefore developed a single factor to be applied uniformly to all projects utilizing OCAFs as the method by which rents are adjusted.

Additionally, section 524 of the Act gives HUD broad discretion in setting OCAFs—referring simply to ''operating cost factors established by the Secretary.'' The sole exception to this grant of authority is a specific requirement that application of an OCAF shall not result in a negative rent adjustment. OCAFs are to be applied uniformly to all projects utilizing OCAFs as the method by which rents are adjusted upon expiration of the term of the contract. OCAFs are applied to project contract rent less debt service.

An analysis of cost data for FHA-insured projects showed that their operating expenses could be grouped into nine categories: wages, employee benefits, property taxes, insurance, supplies and equipment, fuel oil, electricity, natural gas, and water and sewer. Based on an analysis of these data, HUD derived estimates of the percentage of routine operating costs that were attributable to each of these nine expense categories. Data for projects with unusually high or low expenses due to unusual circumstances were deleted from analysis.

States are the lowest level of geographical aggregation at which there are enough projects to permit statistical analysis. Additionally, no data were available for the Western Pacific Islands. Data for Hawaii was therefore used to generate OCAFs for these areas.

The best current measures of cost changes for the nine cost categories were selected. The only categories for which current data are available at the State level are for fuel oil, electricity, and natural gas. Current price change indices for the other six categories are only available at the national level. The Department had the choice of using dated State-level data or relatively current national data. It opted to use national data rather than data that would be two or more years older (*e.g.,* the most current local wage data are for 1996). The data sources for the nine cost indicators selected used were as follows:

Labor Costs—6/99 to 6/00 Bureau of Labor Statistics (BLS), ''Employment Cost Index, Private Sector Wages and Salaries Component at the National Level.''

Employment Benefit Costs—6/99–6/00 (BLS), ''Employment Cost Index, Employee Benefits at the National Level.''

Property Taxes—6/99–6/00 (BLS), ''Consumer Price Index, All Items Index.''

Goods, Supplies, Equipment—6/99–6/00 (BLS), ''Producer Price Index, Finished Goods Less Food and Energy.''

Insurance—6/99–6/00 (BLS), ''Consumer Price Index, Tenant and Household Insurance.''

Fuel Oil—Energy Information Agency, Petroleum Marketing Annual 1999, Table 18, ''Prices of No.2 Distillate to Residences by PAD District and Selected States,'' (Petroleum Administration for Defense District (PADD) average changes were used for the States with too little fuel oil consumption to have values.)

Electricity—Energy Information Agency, Electric Power Annual Volume 1, 1999, Table 22 ''Retail Sales of Electricity, Revenue and Average Revenue per Kilowatt-hour (and RSEs) by U.S. Electric Utilities to Ultimate Consumers by Census Division and State, 1998–1999—Residential.''

Natural Gas—Energy Information Agency, Natural Gas Annual, 1999, Table 22, ''Average Price of Natural Gas Delivered to Residential Consumers by State, 1995–1999 (Preliminary).''

Water and Sewer—6/99–6/00, (BLS), ''Consumer Price Index—Detailed Report.''

The sum of the nine cost components equals 100 percent of operating costs for purposes of OCAF calculations. To calculate the OCAFs, the selected inflation factors are multiplied by the relevant State-level operating cost percentages derived from the previously referenced analysis of FHA insured projects. For instance, if wages in Virginia comprised 50 percent of total operating cost expenses and wages increased by 4 percent from June 1999 to June 2000, the wage increase component of the Virginia OCAF for FY 2001 would be 2.0 percent ($4\% \times 50\%$). This 2.0 percent would then be added to the increases for the other eight expense categories to calculate the FY 2000 OCAF for Virginia. These types of calculations were made for each State for each of the nine cost components, and are included as the Appendix to this Notice.

II. MAHRA OCAF Procedure

The Multifamily Assisted Housing Reform and Affordability Act of 1997, Title V of Public Law 105–65 (approved October 7, 1997), 42 U.S.C. 1437f (MAHRA) as amended by the Preserving Affordable Housing for Senior Citizens and Families into the 21st Century Act of 1999, created the Mark-to-Market Program to reduce the cost of Federal housing assistance, enhance HUD's administration of such assistance, and to ensure the continued affordability of units in certain multifamily housing projects. Section 524 of MAHRA authorizes renewal of Section 8 project-based assistance contracts for projects without Restructuring Plans under the Mark-to-Market Program, including renewals that are not eligible for Plans and those for which the owner does not request Plans. Renewals must be at rents not exceeding comparable market rents except for certain projects. For Section 8 Moderate Rehabilitation projects, other than single room occupancy projects (SROs) under the Stewart B. McKinney Homeless Assistance Act (McKinney Act, 42 U.S.C. 11301 *et seq.*), that are eligible for renewal under section 524(b)(3) of MAHRA, the renewal rents are required to be set at the lesser of: (1) The existing rents under the expiring contract, as adjusted by the OCAF; (2) fair market rents (less any amounts allowed for tenant-purchased utilities; or (3) comparable market rents for the market area.

III. Findings and Certifications

Environmental Impact

This notice sets forth rate determinations and related external administrative requirements and procedures that do not constitute a development decision affecting the physical condition of specific project areas or building sites. Accordingly, under 24 CFR 50.19(c)(6), this notice is categorically excluded from environmental review under the National Environmental Policy Act of 1969 (42 U.S.C. 4321).

Executive Order 13132, Federalism

This notice does not have federalism implications and does not impose substantial direct compliance costs on State and local governments or preempt State law within the meaning of Executive Order 13132 (entitled ''Federalism'').

Catalog of Federal Domestic Assistance Number. The Catalog of Federal Domestic

Assistance Number for this program is 14.187.

Dated: January 10, 2001.

Andrew Cuomo,

Secretary.

APPENDIX—FY 2001 OPERATING COST ADJUSTMENT FACTORS (OCAF) FOR RENT ADJUSTMENTS AT SECTION 8 CONTRACT RENEWAL

[In percent]

State	FY 2001 operating cost adjustment factor
ALABAMA	3.31
ALASKA	2.48
ARIZONA	3.45
ARKANSAS	3.19
CALIFORNIA	2.99
COLORADO	3.20
CONNECTICUT	2.88
DELAWARE	2.84
DISTRICT OF COLUMBIA	2.98
FLORIDA	3.09
GEORGIA	1.68
HAWAII	3.10
IDAHO	3.23
ILLINOIS	2.72
INDIANA	2.81
IOWA	2.79
KANSAS	2.88
KENTUCKY	2.89
LOUISIANA	3.08
MAINE	2.89
MARYLAND	3.19
MASSACHUSETTS	2.64
MICHIGAN	3.00
MINNESOTA	3.22
MISSISSIPPI	2.96
MISSOURI	2.97
MONTANA	3.54
NEBRASKA	3.08
NEVADA	3.21
NEW HAMPSHIRE	2.58
NEW JERSEY	3.31
NEW MEXICO	2.53
NEW YORK	2.79
NORTH CAROLINA	3.25
NORTH DAKOTA	2.90
OHIO	2.87
OKLAHOMA	3.03
OREGON	3.12
PENNSYLVANIA	1.94
RHODE ISLAND	2.35
SOUTH CAROLINA	3.24
SOUTH DAKOTA	3.25
TENNESSEE	3.12
TEXAS	2.79
UTAH	2.58
VERMONT	3.91
VIRGINIA	3.00
WASHINGTON	3.26
WEST VIRGINIA	3.11
WISCONSIN	3.24
WYOMING	3.07
PACIFIC ISLANDS	2.76
PUERTO RICO	3.21
VIRGIN ISLANDS	2.86
UNITED STATES AVERAGE	2.85

[FR Doc. 01–1396 Filed 1–17–01; 8:45 am]

BILLING CODE 4210–33–P

DEPARTMENT OF HOUSING AND URBAN DEVELOPMENT

[Docket No. FR–4558–N–04]

Mortgage Review Board: Administrative Actions—Clarification

AGENCY: Office of Assistant Secretary for Housing—Federal Housing Commissioner, HUD.

ACTION: Public Notice, Mortgagee Review Board, Clarification of Administrative Action.

SUMMARY: In compliance with Section 202(c) of the National Housing Act, notice is given of the cause and description of administrative actions taken by HUD's Mortgage Review Board against HUD-approved mortgagees. This notice provides clarification regarding the description of and the cause for administrative action against a HUD-approved mortgagee.

FOR FURTHER INFORMATION CONTACT: D. Jackson Kinkaid, Secretary to the Mortgage Review Board, Department of Housing and Urban Development, 451 Seventh Street, SW., Washington, DC 20410; telephone (202) 708–3041 extension 3574 (this is not a toll-free number). Hearing or speech-impaired persons may access this number via TTY by calling the toll-free Federal Information Relay Service at 1–800–877–8339.

SUPPLEMENTARY INFORMATION: Section 202(c) of the National Housing Act (added by Section 142 of the Department of Housing and Urban Development Reform Act of 1989, Pub. L. 101–235, approved December 15, 1989), requires that HUD ''publish a description of and the cause for administrative actions against a HUD-approved mortgage'' by the Department's Mortgage Review Board. In compliance with the requirements of Section 202(c)(5), notice is hereby given of a clarification of a previously published description and cause for an administrative action against a HUD-approved mortgagee. The specific mortgagee that is the subject of this clarification is James B. Nutter & Company, Kansas City, Missouri, pursuant to an administrative action originally reported at 65 FR 53734 (#44) published on September 5, 2000. The clarification regarding the administrative action taken against this mortgagee is noted below:

1. James B. Nutter & Company, Kansas City, Missouri.

Action: Proposed settlement agreement of disputed matters that included a payment to the Department.

Cause: A review by HUD's Quality Assurance Division discovered alleged failures to comply with HUD/FHA Loss Mitigation and other HUD/FHA requirements.

Dated: January 10, 2001.

William C. Apgar,

Assistant Secretary for Housing-Federal Housing Commissioner, Chairman, Mortgagee Review Board.

[FR Doc. 01–1538 Filed 1–17–01; 8:45 am]

BILLING CODE 4210–27–M

DEPARTMENT OF THE INTERIOR

Fish and Wildlife Service

Notice of Availability of the Draft Environmental Assessment and Land Protection Plan for the Proposed Establishment of Green River National Wildlife Refuge, Henderson County, KY

AGENCY: Fish and Wildlife Service, Department of the Interior.

ACTION: Notice of availability of the Draft Environmental Assessment and Land Protection Plan for the proposed establishment of Green River National Wildlife Refuge.

SUMMARY: This notice advises the public that the U.S. Fish and Wildlife Service, Southeast Region, proposes to establish a new national wildlife refuge in the Scuffletown Bottoms area in Henderson County, Kentucky. The purpose of the proposed refuge is to protect, restore and manage a valuable complex of wetland habitats for the benefit of migrating and wintering waterfowl, non-game land birds, and other native fish and wildlife. A Draft Environmental Assessment and Land Protection Plan for the establishment of the proposed refuge has been prepared by Service biologists in coordination with the Kentucky Department of Fish and Wildlife Resources. The assessment considers the biological, environmental, and socioeconomic effects of establishing the refute and evaluates three alternative actions and their potential impacts on the environment. Written comments or recommendations concerning the proposal are welcomed and should be sent to the address given below.

DATES: Land acquisition planning for the project is currently underway. The draft environmental assessment and land protection plan will be available to the public for review and comment on January 22, 2001. Written comments must be received no later than March 9, 2001, in order to be considered for the preparation of the final environmental assessment.

ADDRESSES: If you wish to comment, you may submit your comments by any of several methods. You may mail your comments to Mr. Charles R. Danner, Team Leader, Planning and Support Team, U.S. Fish and Wildlife Service, 1875 Century Boulevard, Atlanta, Georgia 30345. You may hand-deliver your comments to Mr. Danner at the same address. Or you may submit your comments by telephone at 1–800–419–9582. Our practice is to make comments, including names and home addresses of respondents, available for public review during regular business hours. Individual respondents may request that we withhold their home address from the record, which we will honor to the extent allowable by law. There also may be circumstances in which we would withhold from the record a respondent's identity, as allowable by law. if you wish us to withhold your name and/or address, you must state this prominently at the beginning of your comment. However, we will not consider anonymous comments. We will make all submissions from organizations or businesses, and from individuals identifying themselves as representatives or officials of organizations and businesses, available for public inspection in their entirety.

SUPPLEMENTARY INFORMATION: The proposal would establish a national wildlife refuge on up to 23,000 acres of wetlands and bottomland hardwoods along the confluence of the Green and Ohio Rivers in Henderson County, Kentucky. The Service is proposing to establish the refuge through a combination of fee title purchases from willing sellers and leases, conservation easements, or cooperative agreements from willing landowners.

The goals of the proposed refuge would be to provide (1) Habitat for migrating and wintering waterfowl, (2) habitat for non-game land birds, (3) habitats for a natural diversity of fish and wildlife, (4) nesting habitat for wood ducks and other locally nesting migratory waterfowl, (5) quality hunting and sportfishing opportunities, and (6) opportunities for environmental education, interpretation, and wildlife-oriented recreation.

Dated: January 5, 2001.

Sam D. Hamilton,

Regional Director.

[FR Doc. 01–1441 Filed 1–17–01; 8:45 am]

BILLING CODE 4310–55–M

DEPARTMENT OF THE INTERIOR

Bureau of Land Management

[ID–957–1430–BJ]

Idaho: Filing of Plats of Survey

AGENCY: Bureau of Land Management, Interior.

ACTION: Notice.

SUMMARY: The plats of the following described lands were officially filed in the Idaho State Office, Bureau of Land Management, Boise, Idaho, effective 9 a.m., on the dates specified:

The plat representing the entire survey record of the dependent resurvey of a portion of the subdivisional lines, T. 5 N., R. 1 E., Boise Meridian, Idaho, Group Number 1092, was accepted October 2, 2000. The plat was prepared to meet certain administrative needs of the Bureau of Land Management.

The plat representing the dependent resurvey of a portion of the east boundary and of the subdivisional lines, and the subdivision of section 36, T. 2 S., R. 36 E., Boise Meridian, Idaho, and the plat representing the dependent resurvey of portions of the east and north boundaries, and the subdivisional lines, and the subdivision of sections 13, 14, and 24, T. 3 S., R. 36 E., Boise Meridian, Idaho, Group Number 999, were accepted November 6, 2000. The plats were prepared to meet certain administrative needs of the Bureau of Indian Affairs, Fort Hall Agency.

FOR FURTHER INFORMATION CONTACT: Duane Olsen, Chief, Cadastral Survey, Idaho State Office, Bureau of Land Management, 1387 South Vinnell Way, Boise, Idaho 83709–1657, 208–373–3980.

Dated: January 3, 2001.

Harry K. Smith,

Acting Chief, Cadastral Surveyor for Idaho.

[FR Doc. 01–1395 Filed 1–17–01; 8:45 am]

BILLING CODE 4310–GG–P

DEPARTMENT OF THE INTERIOR

Bureau of Reclamation

Definition and Payback of Inadvertent Overruns for Delivery of Lower Colorado River Water; Notice of Public Comment Period

AGENCY: Bureau of Reclamation, Interior.

ACTION: Notice of public comment period.

SUMMARY: The Bureau of Reclamation (Reclamation) proposes a policy that will identify inadvertent overruns, will establish procedures that account for inadvertent overruns, and will define subsequent payback requirements to the Colorado River mainstream, and invites comments on its draft proposal.

DATES: Comments on this notice must be received at the address below on or before March 24, 2001.

ADDRESSES: If you wish to comment, you may mail comments to Deputy Area Manager, Boulder Canyon Operations Office, Lower Colorado Region, Bureau of Reclamation, BCOO–1010, P.O. Box 61470, Boulder City, Nevada 89006. You may also comment via the Internet at InadvertentOverrun@lc.usbr.gov. If you comment via the Internet, please submit comments as an ASCII file avoiding the use of special characters and any form of encryption. If you do not receive a confirmation via e-mail that we have received your Internet message, please contact us directly at (702) 293–8592.

Our practice is to make comments, including names and home addresses of respondents, available for public review. Individual respondents may request that we withhold their home address from public disclosure, which we will honor to the extent allowable by law. There also may be circumstances in which we would withhold a respondent's identity from public disclosure, as allowable by law. If you wish us to withhold your name and/or address, you must state this prominently at the beginning of your comment. We will make all submissions from organizations or businesses, and from individuals identifying themselves as representatives or officials of organizations or businesses, available for public disclosure in their entirety.

FOR FURTHER INFORMATION CONTACT: Mr. John Redlinger, (702) 293–8592.

SUPPLEMENTARY INFORMATION: In its June 3, 1963 opinion in the case of *Arizona* v. *California* (373 U.S. 546), the Supreme Court of the United States held that the Congress has directed the Secretary of the Interior (Secretary) to administer a network of useful projects constructed by the Federal Government on the lower Colorado River, and it has entrusted the Secretary with sufficient power to direct, manage, and coordinate their operation. The Court held that this power must be construed to permit the Secretary to allocate and distribute the waters of the mainstream of the Colorado River within the boundaries set down by the Boulder Canyon Project Act (45 Stat. 1057, 43 U.S.C. 617) (BCPA). The Secretary has entered into contracts for the delivery of Colorado River water with entities in Arizona, California, and Nevada in accordance with section 5 of the BCPA. The

Secretary has the responsibility of operating Federal facilities on the Colorado River and delivering mainstream Colorado River water to users in Arizona, California, and Nevada that hold entitlements, including present perfected rights, to such water.

Article V of the Decree of the Supreme Court of the United States in *Arizona* v. *California* dated March 9, 1964 (376 U.S. 340) requires the Secretary to compile and maintain records of diversions of water from the mainstream, of return flow of such water to the mainstream as is available for consumptive use in the United States or in satisfaction of the Mexican Treaty obligation, and of consumptive use of such water. Reclamation reports this data each year in the Decree Accounting Record.

Pursuant to the Criteria for Coordinated Long-Range Operation of Colorado River Reservoirs developed as a result of the Colorado River Basin Project Act of September 30, 1968, the Secretary annually consults with representatives of the governors of the Colorado River Basin States, general public and others and issues an Annual Operating Plan (AOP) for the coordinated operation of the Colorado River reservoirs. Reclamation also requires each Colorado River water user in the Lower Basin to schedule water deliveries in advance for the following calendar year (calendar year is the annual basis for decree accounting of consumptive use in the lower Colorado basin) and to later report its actual water diversions and returns to the mainstream.

Pursuant to 43 CFR part 417, prior to the beginning of each calendar year, Reclamation consults with entities holding BCPA section 5 contracts (Contractor) for the delivery of water. Under these consultations, Reclamation makes recommendations relating to water conservation measures and operating practices in the diversion, delivery, distribution, and use of Colorado River water. Reclamation also makes a determination of the Contractor's estimated water requirements for the ensuing calendar year to the end that deliveries of Colorado River water to each Contractor will not exceed those reasonably required for beneficial use under the respective BCPA contract or other authorization for use of Colorado River water. Reclamation then monitors the actual water orders, receives reports of measured diversions and return flows from major Contractors and federal establishments, estimates unmeasured diversions and return flows, calculates consumptive use from preliminary diversions and measured and unmeasured return flows, and reports these records on an individual and aggregate monthly basis. Later, when final records are available, Reclamation prepares and publishes the final Decree Accounting Record on a calendar year basis.

For various reasons, a user may inadvertently consumptively use Colorado River water in an amount that exceeds the amount available under its entitlement (inadvertent overrun). Further, the final Decree Accounting Record may show that an entitlement holder inadvertently diverted water in excess of the quantity of the entitlement that may not have been evident from the preliminary records. Reclamation is therefore considering an administrative policy that defines inadvertent overruns, establishes procedures that account for the inadvertent overruns and defines the subsequent requirements for pay back to the Colorado River mainstream.

Any effects of the proposed administrative policy decision on the environment will be addressed pursuant to the National Environmental Policy Act.

Inadvertent Overruns

Reclamation is proposing for the Lower Colorado River Basin an inadvertent overrun policy that would include the following features:

a. Inadvertent overruns are those which the Secretary deems to be beyond the control of the water user; for example, overruns due to the discrepancy between preliminary and final stream flow and diversion records, or overruns due to an unanticipated but lawful use by a higher-priority water user.

b. An inadvertent overrun is Colorado River water diverted, pumped or received by an entitlement holder in excess of the water user's entitlement for that year. The inadvertent overrun policy provides a structure to pay back the amount of water diverted, pumped or received in excess of entitlement. The inadvertent overrun policy does not create any right or entitlement to this water, nor does it expand the underlying entitlement in any way. An entitlement holder has no right to order, divert, pump or receive an inadvertent overrun. If, however, water is diverted, pumped or received inadvertently in excess of entitlement, and the Contractor's State's apportionment of Colorado River water for that year is exceeded, the inadvertent overrun policy will govern the payback.

c. Payback will be required to commence in the calendar year that immediately follows the release date of a Decree Accounting Record that reports uses that are in excess of an individual's entitlement.

d. Payback must be made only from measures that are above and beyond the normal consumptive use of water (extraordinary conservation measures). Extraordinary conservation measures mean actions taken to conserve water that otherwise would not return to the mainstream of the Colorado River and be available for beneficial consumptive use in the United States or to satisfy the Mexican treaty obligation. Any entitlement holder with a payback obligation must submit to Reclamation, along with its water order, a plan which will show how it will intentionally forbear use of Colorado River water by extraordinary conservation and/or fallowing measures sufficient to meet its payback obligation, which are in addition to the measures found in its Reclamation approved conservation plan. Plans for payback could also include supplementing Colorado River system water supplies with non-system water supplies. Water banked off-stream or groundwater from areas not hydrologically connected to the Colorado River or its tributaries are examples of such supplemental supplies.

e. Maximum cumulative inadvertent overrun accounts will be specified for individual entitlement holders as 10 percent of an entitlement holder's normal year consumptive use entitlement. (Normal year means a year for which the Secretary has determined that sufficient mainstream Colorado River water is available for release to satisfy 7.5 maf of annual consumptive use in the States of California, Arizona and Nevada.)

f. The number of years within which an overrun, calculated from consumptive uses reported in final Decree Accounting Records, must be paid back, and the minimum payback required for each year shall be as follows:

1. In a year in which the Secretary makes a flood control release or a space building release, any accumulated amount in the overrun account will be forgiven.

2. If the Secretary has declared a 70 R surplus in the AOP, any payback obligation will be deferred at the entitlement holder's option.

3. When Lake Mead elevation is between the elevation for a 70R surplus declaration and elevation 1125 feet above mean sea level on January 1, the payback obligation must be paid back in full within 3 years, with a minimum payback that year of the greater of 20

percent of the individual entitlement holder's maximum allowable cumulative overrun account amount or 33.3 percent of the total account balance.

4. When Lake Mead elevation is at or below elevation 1,125 feet above mean sea level on January 1, the total account balance will be paid back in full in that calender year.

5. For any year in which the Secretary declares a shortage under the Decree, the total account will be paid back in full that calender year, and further accumulation of inadvertent overruns will be suspended as long as shortage conditions prevail.

g. A separate inadvertent overrun account may be established in those limited cases in which a lower priority user is, or has agreed to be, responsible for consumptive uses by one or more un-quantified senior water entitlement or right holders having finite service area acreage. The separate inadvertent overrun account will be limited to a maximum cumulative amount of 10 percent of the senior right holders average consumptive use. Such inadvertent overrun accounts will be the assigned responsibility of the lower priority user. If, however, such senior entitlement or right holders' approved aggregate calendar year water orders are in excess of the specified amount above which the lower priority user will be responsible, such excess will not be deemed inadvertent and the lower priority user's water order for that year will be reduced accordingly by Reclamation.

h. Each month, Reclamation will monitor the actual water orders, receive reports of measured diversions and return flows from Contractors and federal establishments, estimate unmeasured diversions and return flows, and project individual and aggregate consumptive uses for the year. Should preliminary determinations indicate that monthly consumptive uses by individual users, or aggregate uses, when added to the approved schedule of uses for the remainder of that year, exceed contract entitlements but are not exceeding the maximum inadvertent overrun account amount, Reclamation will notify in writing the appropriate entities that the preliminary determinations are forecasting annual uses in excess of their entitlements.

i. During years in which an entitlement holder is forbearing use to meet its payback obligation, should preliminary determinations of monthly consumptive uses indicate that sufficient forbearance is not projected to occur, Reclamation will also notify the appropriate entitlement holders in writing that the preliminary determinations are forecasting that their annual payback obligations are not on target or being met. If this condition occurs for two consecutive years, in the second year Reclamation will advise the entitlement holder in writing by July 31, will consult with the entitlement holder on a modified release schedule and will limit releases to the entitlement holder for the remainder of the year such that by the end of the year the individual entitlement holder has met their payback obligation.

j. Should preliminary determinations indicate that monthly consumptive uses by individual users, or aggregate uses, when added to the approved schedule of uses for the remainder of that year, exceed the individual entitlement holder's maximum cumulative overrun account amount, Reclamation will advise the entitlement holder in writing by July 31, will consult with the entitlement holder on a modified release schedule and will limit releases to the entitlement holder for the remainder of the year such that by the end of the year the individual entitlement holder's maximum cumulative overrun account amount has not been exceeded.

k. Procedures will be established for accounting for inadvertent overruns on an annual basis and for supplementing the final Decree Accounting Record.

Reclamation invites comments on the features noted above and in particular on: what limits might be placed on any maximum cumulative overrun account; the duration of the payback period; and from what types of water would payback be allowed.

Public Meetings

Reclamation will hold public meetings to present information and solicit public input if there is a sufficient level of interest. Submit any request for a public meeting to Mr. John Redlinger (see **ADDRESSES**).

Dated: January 12, 2001.

Robert W. Johnson,

Regional Director, Lower Colorado Regional Office.

[FR Doc. 01–1531 Filed 1–17–01; 8:45 am]

BILLING CODE 4310–MN–P

DEPARTMENT OF THE INTERIOR

Bureau of Reclamation

[INT–DES–01–02]

Pick-Sloan Missouri Basin Program, Angostura Unit, South Dakota

AGENCY: Bureau of Reclamation, Interior.

ACTION: Notice of availability and public hearing on draft environmental impact statement (DEIS).

SUMMARY: Pursuant to section 102(2)(C) of the National Environmental Policy Act of 1969, as amended, the Department of the Interior, Bureau of Reclamation, has prepared a DEIS on the proposed renewal of a long-term water service contract for irrigation water from the Federal Angostura Unit, Cheyenne River basin, South Dakota. The DEIS describes four alternatives, including no action, and evaluates their environmental consequences. No Preferred Alternative has been chosen at this time. One will be selected after the public review period. Public hearings have been scheduled to provide interested parties an opportunity to provide oral or written comments on the proposed renewal of a long-term water service contract.

DATES: A 90-day public review and comment period commences with the publication of this notice. Written comments on the DEIS should be submitted by April 27, 2001.

Written comments from interested parties unable to attend the hearings, those not wanting to make oral presentations, or those wishing to supplement their oral presentations at the public hearing should be transmitted to the Rapid City Field Office by April 27, 2001, for inclusion in the public record.

Public hearings have been scheduled for the following dates, times, and locations:

February 13, 2001, 7–9 PM, Rushmore Plaza Holiday Inn 505 N 5th St., Rapid City, South Dakota

February 14, 2001, 7–9 PM, Mueller Civic Center, 801 S. 6th St., Hot Springs, South Dakota

February 15, 2001, 1–5 PM, Oglala Lakota College, 3 Mile Creek, Piya Wiconi Rd., Kyle, South Dakota

February 21, 2000, 2–4 PM, Super 8 Motel, West Highway 212, Eagle Butte, South Dakota

February 22, 2001, 2–4 PM, Lower Brule Convention Center, Lower Brule Sioux Tribe, Lower Brule, South Dakota

Written comments on the DEIS should be submitted to the Rapid City Field Office Manager (Attention: Kenneth Parr), 515 9th Street, Room 101, Rapid City, SD 57701, or through email to kparr@gp.usbr.gov.

Our practice is to make comments, including names and home addresses of respondents, available for public review. Individual respondents may request that we withhold their home

address from public disclosure, which we will honor to the extent allowable by law. There also may be circumstances in which we would withhold a respondent's identity from public disclosure, as allowable by law. If you wish us to withhold your name and/or address, you must state this prominently at the beginning of your comment. We will make all submissions from organizations or businesses, and from individuals identifying themselves as representatives or officials of organizations or businesses, available for public disclosure in their entirety.

You may request a Summary of the DEIS or the entire DEIS (with appendices in printed copy or on computer disk). Copies may be obtained from the above address, by telephone (605) 394–9757 ext. 3004, or through email at kparr@gp.usbr.gov. Copies are also available for public inspection and review on the internet at ''www.dka.gp.usbr.gov'' in the ''Current Activities'' section under ''Angostura Unit''.

See **SUPPLEMENTARY INFORMATION** section for additional addresses where the DEIS is available for public inspection and review.

FOR FURTHER INFORMATION CONTACT: Kenneth Parr, Rapid City Field Office, 515 9th Street, Room 101, Rapid City, SD 57701 telephone—(605) 394–9757 ext. 3004, or email kparr@gp.usbr.gov

SUPPLEMENTARY INFORMATION:

DEIS Public Inspection and Review Locations

Offices

- Bureau of Reclamation, Rapid City Field Office, 515 9th Street, Room 101, Rapid City, SD 57701—telephone (605) 394–9757 ext. 3004.
- Bureau of Reclamation, Dakotas Area Office, 304 East Broadway Ave., Bismarck, ND 58502—telephone (701) 250–4242.
- Bureau of Reclamation, Great Plains Regional Office, 316 North 26th Street, Billings, MT 59101—telephone (406) 247–7638.
- Bureau of Reclamation, Reclamation Service Center Library, Building 67, Room 167, Denver Federal Center, Sixth and Kipling, Denver, CO 80225—telephone (303) 445–2072.
- Bureau of Reclamation, Program Analysis Office, Room 7456, 1849 C Street NW, Washington, DC 20240—telephone (202) 208–4662.
- Angostura Irrigation District in South Dakota, Main Street, Oral, SD 57766.

Libraries

South Dakota State Library, Mercedes MacKay Building, 800 Governors Drive, Pierre, South Dakota 57501–2294.

Rapid City Public Library, 610 Quincy Street, Rapid City, SD 57701–3655.

Hot Springs Library, 1543 Baltimore Avenue, Hot Springs, South Dakota 57747.

Custer County Library, 447 Crook #4, Custer, South Dakota 57730.

Oglala Lakota College, 3 Mile Creek, Piya Wiconi Road, Kyle, South Dakota 57752.

Cheyenne River Community College, Main Street, Box 212, Eagle Butte, South Dakota 57625.

Lower Brule Tribal Library, Lower Brule Sioux Tribe, Lower Brule, South Dakota 57548.

Pine Ridge Library, Main St., Box 439, Pine Ridge, South Dakota 57770.

Hearing Process Information

Organizations and individuals wishing to present oral statements are strongly encouraged to contact Kenneth Parr, Bureau of Reclamation, Rapid City Field Office, at the address above, telephone (605) 394–9757 ext. 3004, or email at kparr@gp.usbr.gov, to announce their intention to participate in the public hearing. Requests to make presentations will also be accepted at the hearings. Written statements may also be submitted at the hearings.

Oral statements at the public hearings will be limited to 5 minutes. If time permits, the hearing officer may allow speakers to extend their oral statement after all persons wishing to comment have been heard. Whenever possible, speakers will be scheduled according to the time preference requested in their letter or telephone request. Scheduled speakers not present at the public hearing when called will lose their privilege in the scheduled order and will be recalled at the end of all the scheduled speakers. Those registering at the meetings may choose from the remaining time slots.

Please notify Reclamation at least 2 weeks in advance of the scheduled hearing if you require special needs in order to participate in the public hearing. Those having special needs should contact Kenneth Parr at (605) 394–9757 or through the Federal Relay System at (800) 877–8339 or via e-mail at kparr@gp.usbr.gov. Smoking will be prohibited in the hearing room and surrounding area.

Dated: January 3, 2001.

Gerald Kelso,

Assistant Regional Director.

[FR Doc. 01–1530 Filed 1–17–01; 8:45 am]

BILLING CODE 4310–MN–P

INTERNATIONAL TRADE COMMISSION

[Investigation 332–425]

U.S.-Korea FTA: The Economic Impact of Establishing a Free Trade Agreement (FTA) Between the United States and the Republic of Korea

AGENCY: United States International Trade Commission.

ACTION: Institution of investigation and scheduling of public hearing.

EFFECTIVE DATE: January 9, 2001.

SUMMARY: Following receipt of a request on December 18, 2000, from the Senate Committee on Finance (Committee), the Commission instituted investigation No. 332–425, U.S.-Korea FTA: The Economic Impact of Establishing a Free Trade Agreement (FTA) Between the United States and the Republic of Korea, under section 332(g) of the Tariff Act of 1930 (19 U.S.C. 1332(g)). The Commission plans to submit its report by September 18, 2001.

As requested by the Committee, in its report the Commission will provide to the extent possible:

- An overview of the Korean economy
- An overview of the current economic relationship between the United States and the Republic of Korea, including a discussion of the important industry sectors in both countries
- An inventory and analysis of the main barriers (tariff and nontariff) to trade between the United States and the Republic of Korea
- To the extent data are available, the estimated effects of eliminating all quantifiable trade barriers (tariff and nontariff), with special attention to agricultural goods, on:
- The volume of trade in goods and services between the two countries
- Sectoral output and gross domestic product for each country
- Wages and employment across industry sectors for each country
- Final prices paid by consumers in each country
- A qualitative assessment of the effects of removing nonquantifiable trade barriers

FOR FURTHER INFORMATION CONTACT: Information may be obtained from Christine McDaniel, Project Leader (TEL: 202–708–5404; EMAIL: cmcdaniel@usitc.gov), Office of Economics, or Alan Fox, Deputy Project Leader (TEL: 202–205–3267; EMAIL: afox@usitc.gov), Office of Economics, U.S. International Trade Commission, Washington, DC, 20436. For information on the legal aspects, contact William

Gearhart (TEL: 202–205–3091; EMAIL: wgearheart@ustic.gov), Office of the General Counsel. Hearing impaired individuals are advised that information on this matter can be obtained by contacting the TDD terminal on (202) 205–1810.

Background: In its letter to the Commission, the Committee stated that a number of the United States' trading partners have aggressively pursued free trade area negotiations that may segment markets to the commercial disadvantage of the United States. The Committee indicated that over the course of the next several months it expects to ask the Commission for a series of investigations under section 332 related to the economic impact of negotiating bilaterally or regionally with particular trading partners in the absence of a new round of multilateral talks.

Public Hearing: A public hearing in connection with the investigation will be held at the U.S. International Trade Commission Building, 500 E Street SW, Washington, DC, beginning at 9:30 a.m. on May 17, 2001. All persons shall have the right to appear, by counsel or in person, to present information and to be heard. Requests to appear at the public hearing should be filed with the Secretary, United States International Trade Commission, 500 E Street SW, Washington, DC 20436, no later than 5:15 p.m., April 27, 2001. Any prehearing briefs (original and 14 copies) should be filed no later than 5:15 p.m., May 4, 2001; the deadline for filing post-hearing briefs or statements is 5:15 p.m., May 25, 2001. In the event that, as of the close of business on April 27, 2001, no witnesses are scheduled to appear at the hearing, the hearing will be canceled. Any person interested in attending the hearing as an observer or nonparticipant may call the Secretary of the Commission (202–205–1806) after April 27, 2001, to determine whether the hearing will be held.

Written Submissions: In lieu of or in addition to participating in the hearing, interested parties are invited to submit written statements (original and 14 copies) concerning the matters to be addressed by the Commission in its report on this investigation. Commercial or financial information that a submitter desires the Commission to treat as confidential must be submitted on separate sheets of paper, each clearly marked ''Confidential Business Information'' at the top. All submissions requesting confidential treatment must conform with the requirements of section 201.6 of the Commission's Rules of Practice and Procedure (19 CFR 201.6). All written submissions, except for confidential business information, will be made available in the Office of the Secretary of the Commission for inspection by interested parties. To be assured of consideration by the Commission, written statements relating to the Commission's report should be submitted to the Commission at the earliest practical date and should be received no later than the close of business on May 25, 2001. All submissions should be addressed to the Secretary, United States International Trade Commission, 500 E Street SW, Washington, DC 20436. The Commission's rules do not authorize filing submissions with the Secretary by facsimile or electronic means.

Persons with mobility impairments who will need special assistance in gaining access to the Commission should contact the Office of the Secretary at 202–205–2000. General information concerning the Commission may also be obtained by accessing its Internet server (http://www.usitc.gov).

List of Subjects

Republic of Korea, Free Trade Agreement, Tariffs, and Imports.

Issued: January 10, 2001.
By order of the Commission.

Donna R. Koehnke,

Secretary.

[FR Doc. 01–1489 Filed 1–17–01; 8:45 am]

BILLING CODE 7020–02–P

INTERNATIONAL TRADE COMMISSION

[Investigations Nos. 731–TA–919–920 (Preliminary)]

Certain Welded Large Diameter Line Pipe From Japan and Mexico

AGENCY: United States International Trade Commission.

ACTION: Institution of antidumping investigations and scheduling of preliminary phase investigations.

SUMMARY: The Commission hereby gives notice of the institution of investigations and commencement of preliminary phase antidumping investigations Nos. 731–TA–919–920 (Preliminary) under section 733(a) of the Tariff Act of 1930 (19 U.S.C. 1673b(a)) (the Act) to determine whether there is a reasonable indication that an industry in the United States is materially injured or threatened with material injury, or the establishment of an industry in the United States is materially retarded, by reason of imports from Japan and Mexico of certain welded large diameter line pipe [1] that are alleged to be sold in the United States at less than fair value. Unless the Department of Commerce extends the time for initiation pursuant to section 732(c)(1)(B) of the Act (19 U.S.C. 1673a(c)(1)(B)), the Commission must reach a preliminary determination in antidumping investigations in 45 days, or in this case by February 26, 2001. The Commission's views are due at the Department of Commerce within five business days thereafter, or by March 5, 2001.

For further information concerning the conduct of these investigations and rules of general application, consult the Commission's Rules of Practice and Procedure, part 201, subparts A through E (19 CFR part 201), and part 207, subparts A and B (19 CFR part 207).

EFFECTIVE DATE: January 10, 2001.

FOR FURTHER INFORMATION CONTACT: Diane J. Mazur (202–205–3184), Office of Investigations, U.S. International Trade Commission, 500 E Street SW., Washington, DC 20436. Hearing-impaired persons can obtain information on this matter by contacting the Commission's TDD terminal on 202–205–1810. Persons with mobility impairments who will need special assistance in gaining access to the Commission should contact the Office of the Secretary at 202–205–2000. General information concerning the Commission may also be obtained by accessing its internet server (http://www.usitc.gov).

SUPPLEMENTARY INFORMATION:

Background.—These investigations are being instituted in response to a petition filed on January 10, 2001, by Berg Steel Pipe Corp., Panama City, FL; American Steel Pipe Division of American Cast Iron Pipe Co., Birmingham, AL; and Stupp Corp., Baton Rouge, LA.

Participation in the investigations and public service list.—Persons (other than petitioners) wishing to participate in the investigations as parties must file an entry of appearance with the Secretary to the Commission, as provided in sections 201.11 and 207.10 of the Commission's rules, not later than seven days after publication of this notice in the **Federal Register**. Industrial users and (if the merchandise under investigation is sold at the retail level) representative consumer organizations

[1] For purposes of these investigations certain welded large diameter line pipe are welded circular carbon and alloy products of a kind used in oil and gas pipelines with an outside diameter greater than 16 inches, regardless of stenciling. The products are provided for in subheadings 7305.11.10, 7305.11.50, 7305.12.10, 7305.12.50, 7305.19.10, and 7305.19.50 of the Harmonized Tariff Schedule of the United States.

have the right to appear as parties in Commission antidumping investigations. The Secretary will prepare a public service list containing the names and addresses of all persons, or their representatives, who are parties to these investigations upon the expiration of the period for filing entries of appearance.

Limited disclosure of business proprietary information (BPI) under an administrative protective order (APO) and BPI service list.—Pursuant to section 207.7(a) of the Commission's rules, the Secretary will make BPI gathered in these investigations available to authorized applicants representing interested parties (as defined in 19 U.S.C. 1677(9)) who are parties to the investigations under the APO issued in the investigations, provided that the application is made not later than seven days after the publication of this notice in the **Federal Register**. A separate service list will be maintained by the Secretary for those parties authorized to receive BPI under the APO.

Conference.—The Commission's Director of Operations has scheduled a conference in connection with these investigations for 9:30 a.m. on January 31, 2001, at the U.S. International Trade Commission Building, 500 E Street SW., Washington, DC. Parties wishing to participate in the conference should contact Diane Mazur (202–205–3184) not later than January 29, 2001, to arrange for their appearance. Parties in support of the imposition of antidumping duties in these investigations and parties in opposition to the imposition of such duties will each be collectively allocated one hour within which to make an oral presentation at the conference. A nonparty who has testimony that may aid the Commission's deliberations may request permission to present a short statement at the conference.

Written submissions.—As provided in sections 201.8 and 207.15 of the Commission's rules, any person may submit to the Commission on or before February 5, 2001, a written brief containing information and arguments pertinent to the subject matter of the investigations. Parties may file written testimony in connection with their presentation at the conference no later than three days before the conference. If briefs or written testimony contain BPI, they must conform with the requirements of sections 201.6, 207.3, and 207.7 of the Commission's rules. The Commission's rules do not authorize filing of submissions with the Secretary by facsimile or electronic means.

In accordance with sections 201.16(c) and 207.3 of the rules, each document filed by a party to the investigations must be served on all other parties to the investigations (as identified by either the public or BPI service list), and a certificate of service must be timely filed. The Secretary will not accept a document for filing without a certificate of service.

Authority: These investigations are being conducted under authority of title VII of the Tariff Act of 1930; this notice is published pursuant to section 207.12 of the Commission's rules.

Issued: January 10, 2001.

By order of the Commission.

Donna R. Koehnke,

Secretary.

[FR Doc. 01–1491 Filed 1–17–01; 8:45 am]

BILLING CODE 7020–02–P

INTERNATIONAL TRADE COMMISSION

[Inv. No. 337–TA–438]

In the Matter of Certain Plastic Molding Machines With Control Systems Having Programmable Operator Interfaces Incorporating General Purpose Computers, and Components Thereof; Notice of a Commission Determination Not to Review an Initial Determination Terminating the Investigation on the Basis of a Settlement Agreement

AGENCY: U.S. International Trade Commission.

ACTION: Notice.

SUMMARY: Notice is hereby given that the U.S. International Trade Commission has determined not to review the presiding administrative law judge's (''ALJ's'') initial determination (''ID'') granting a joint motion to terminate the above-captioned investigation on the basis of a settlement agreement.

FOR FURTHER INFORMATION: Peter L. Sultan, Office of the General Counsel, U.S. International Trade Commission, telephone (202) 205–3094.

SUPPLEMENTARY INFORMATION: The Commission instituted this investigation on October 13, 2000, based on a complaint filed by Milacron Inc. (''Milacron'') alleging that respondents UBE Industries, Ltd. and UBE Machinery Inc. (collectively ''UBE'') violated section 337 of the Tariff Act of 1930, as amended, 19 U.S.C. 1337, by importing, selling for importation, or selling within the United States after importation certain plastic molding machines with control systems having programmable operator interfaces incorporating general purpose computers, and components thereof, that infringe certain claims of Milacron's U.S. Letters Patent 5,062,052, as amended by Reexamination Certificate B1 5,062,052.

On November 6, 2000, Milacron and UBE entered into a settlement agreement, which included an agreement to file a joint motion to terminate the investigation. On November 13, 2000, Milacron and UBE filed the joint motion to terminate the investigation, which was supported by the Commission investigative attorney.

On December 20, 2000, the ALJ issued an ID (Order No. 2) granting the joint motion to terminate the investigation on the basis of the settlement agreement. None of the parties filed a petition to review the subject ID. The Commission subsequently determined not to review the subject ID.

This action is taken under the authority of section 337 of the Tariff Act of 1930, as amended, 19 U.S.C. 1337, and Commission rule 210.42, 19 CFR 210.42. Copies of the public version of the ALJ's ID and all other nonconfidential documents filed in connection with this investigation are or will be available for inspection during official business hours (8:45 a.m. to 5:15 p.m.) in the Office of the Secretary, U.S. International Trade Commission, 500 E Street, SW., Washington, DC 20436, telephone 202–205–2000. Hearing-impaired persons are advised that information on this matter can be obtained by contacting the Commission's TDD terminal on 202–205–1810. General information concerning the Commission may also be obtained by accessing its Internet server (http://www.usitc.gov).

Issued: January 10, 2001.

By order of the Commission.

Donna R. Koehnke,

Secretary.

[FR Doc. 01–1490 Filed 1–17–01; 8:45 am]

BILLING CODE 7020–02–P

INTERNATIONAL TRADE COMMISSION

[USITC SE–01–003]

Sunshine Act Meeting

AGENCY HOLDING THE MEETING: United States International Trade Commission.

TIME AND DATE: January 22, 2001 at 2:00 p.m.

PLACE: Room 101, 500 E Street SW, Washington, DC 20426, Telephone: (202) 205–2000.

STATUS: Open to the public.

MATTERS TO BE CONSIDERED:

1. Agenda for future meeting: none.
2. Minutes.
3. Ratification List.
4. Inv. Nos. 701–TA–409–412 and 731–TA–909–912 (Preliminary) (Low-Enriched Uranium from France, Germany, the Netherlands, and the United Kingdom)—briefing and vote. (The Commission is currently scheduled to transmit its determination to the Secretary of Commerce on January 22, 2001; Commissioners' opinions are currently scheduled to be transmitted to the Secretary of Commerce on January 29, 2001.)
5. Outstanding action jackets:

(1) Document No. GC–00–100: Concerning Inv. No. 337–TA–432 (Certain Semiconductor Chips with Minimized Chip Package Size and Products Containing Same).

(2) Document No. INV–00–223: Approval of final report in Inv. No. TA–204–3 (Lamb Meat).

In accordance with Commission policy, subject matter listed above, not disposed of at the scheduled meeting, may be carried over to the agenda of the following meeting.

Issued: January 12, 2001.

By order of the Commission:

Donna R. Koehnke,

Secretary.

[FR Doc. 01–1695 Filed 1–16–01; 3:47 pm]

BILLING CODE 7020–02–P

JUDICIAL CONFERENCE OF THE UNITED STATES

Hearing of the Judicial Conference Advisory Committee on Rules of Civil Procedure

AGENCY: Judicial Conference of the United States, Advisory Committee on Rules of Civil Procedure.

ACTION: Notice of open hearing.

SUMMARY: The Advisory Committee on Rules of Civil Procedure has proposed amendments to Rule C of the Supplemental Rules for Certain Admiralty and Maritime Claims. A public hearing on the amendments is scheduled to be held in Washington, DC on March 12, 2001.

The Judicial Conference Committee on Rules Practice and Procedure submits this rule for public comment. All comments and suggestions with respect to the amendments must be placed in the hands of the Secretary as soon as convenient and, in event, not later than April 2, 2001. Those wishing to testify should contact the Secretary at the address below in writing at least 21 days before the hearing. All written comments on the proposed rule amendments should be mailed to: Peter G. McCabe, Secretary, Committee on Rules of Practice and Procedure of the Judicial Conference of the United States, Thurgood Marshall Federal Judiciary Building, Washington, DC 20544.

Comments on the proposed rule amendments may also be sent electronically via the Internet at *http://www.uscourts.gov/rules.* In accordance with established procedures all comments submitted on the proposed amendments are available to public inspection.

The text of the proposed rule amendments and the accompanying Committee Notes can be found at the United States Federal Courts' Home Page at *http://www.uscourts.gov/rules* on the Internet.

FOR FURTHER INFORMATION CONTACT: John K. Rabiej, Chief, Rules Committee Support Office, Administrative Office of the United States Courts, Washington, DC 20544, telephone (202) 502–1820.

Dated: January 12, 2001.

John K. Rabiej,

Chief, Rules Committee Support Office.

[FR Doc. 01–1476 Filed 1–17–01; 8:45 am]

BILLING CODE 2210–55–M

DEPARTMENT OF LABOR

Office of the Secretary

Submission for OMB Review; Comment Request

January 8, 2001.

The Department of Labor (DOL) has submitted the following public information collection request (ICR) to the Office of Management and Budget (OMB) for review and approval in accordance with the Paperwork Reduction Act of 1995 (Pub. L. 104–13, 44 U.S.C. Chapter 35). A copy the ICR, with applicable supporting documentation, may be obtained by calling the Department of Labor. To obtain documentation for BLS, ETA, PWBA, and OASAM contact Karin Kurz ((202) 693–4127 or by E-mail to Kurz-Karin@dol.gov). To obtain documentation for ESA, MSHA, OHSA, and VETS contact Darrin King ((202) 693–4129 or by E-mail to King-Darrin@dol.gov).

Comments should be sent to Office of Information and Regulatory Affairs, Attn: OMB Desk Officer for BLS, DM, ESA, ETA, MSHA, OSHA, PWBA, or VETS, Office of Management and Budget, Room 10235, Washington, DC 20503 ((202) 395–7316), within 30 days from the date of this publication in the **Federal Register**.

The OMB is particularly interested in comments which:

- Evaluate whether the proposed collection of information is necessary for the proper performance of the functions of the agency, including whether the information will have practical utility;
- Evaluate the accuracy of the agency's estimate of the burden of the proposed collection of information, including the validity of the methodology and assumptions used;
- Enhance the quality, utility, and clarity of the information to be collected; and
- Minimize the burden of the collection of information on those who are to respond, including through the use of appropriate automated, electronic, mechanical, or other technological collection techniques or other forms of information technology, *e.g.*, permitting electronic submission of responses.

Type of Review: New collection.

Agency: Employment and Training Administration.

Title: Workforce Investment Act (WIA) Employment and Training Administration (ETA) Financial Reporting Requirements for Indian and Native American (INA) Grantee Activities.

OMB Number: 1205–0New.

Affected Public: State, Local, or Tribal Government; business or other for-profit; not-for-profit institutions.

Frequency: Quarterly.

Number of Respondents: 150.

Estimated Time Per Respondent: 12 hours.

Total Burden Hours: 1,800.

Description: The collection of data for this report will provide accountability to the Department who is charged by law with the responsibility for ensuring that all WIA funds are expended in accordance with applicable laws and regulations while grantees are carrying out the purposes for which their grant was awarded. (Subtitle E, Sec. 185 and 29 CFR 668.600.)

Ira L. Mills,

Departmental Clearance Officer.

[FR Doc. 01–1446 Filed 1–17–01; 8:45 am]

BILLING CODE 4510–30–M

DEPARTMENT OF LABOR

Employment and Training Administration

Workforce Investment Act: Migrant and Seasonal Farmworker Youth Program Under WIA Section 127(b)(1)(A)(iii) and Section 167

AGENCY: Employment and Training Administration, Labor.

ACTION: Notice of Proposed Data Collection.

SUMMARY: The Department of Labor, as part of its continuing effort to reduce paperwork and respondent burden, conducts a preclearance consultation process to provide the general public and Federal agencies with an opportunity to comment on proposed and/or continuing collections of information in accordance with the Paperwork Reduction Act of 1995 (PRA95) [44 U.S.C. 3506(c)(2)(A)]. This process helps to ensure that requested data can be provided in the desired format, reporting burdens are minimized, collection instruments are clearly understood, and the impact of collection requirements on respondents can be properly assessed. Currently, the Employment and Training Administration (ETA), in consultation with the Migrant and Seasonal Farmworker Employment and Training Advisory Committee, is soliciting comments concerning the proposed institution of a ''reporting and performance standards system for the Youth Title I-D Section 167 National Farmworker Jobs Programs of the Workforce Investment Act (WIA)''. A copy of the proposed information collection request (ICR) can be obtained by contacting the office listed below in the address section of this notice.

DATES: Written comments must be submitted to the office listed in the addressee section below on or before March 19, 2001.

ADDRESSES: Alicia Fernandez-Mott, Chief, Division of Seasonal Farmworker Programs, Employment and Training Administration, U.S. Department of Labor, Room N–4641, 200 Constitution Avenue, NW, Washington, DC 20210. Telephone: (202) 693–3729 (VOICE) or (202) 693–3818 (FAX) (these are not toll-free numbers) or INTERNET: afernandez@doleta.gov.

FOR FURTHER INFORMATION CONTACT: Copies of the information collection request are available for inspection in the Division of Seasonal Farmworker Programs at the above address, and will be mailed to persons who request copies in writing from Alicia Fernandez-Mott at the above address.

SUPPLEMENTARY INFORMATION:

I. Background

The Employment and Training Administration of the Department of Labor, in consultation with the Migrant and Seasonal Farmworker Employment and Training Advisory Committee, is requesting approval for a new reporting and performance standards system for Youth Title I–D Section 167 National Farmworker Jobs Programs of the Workforce Investment Act (WIA), youth grantees for three program years (July 1, 2000 to June 30, 2003). This is the first time since the Comprehensive Employment and Training Act (CETA), that funds have been appropriated for farmworker youth activities. The Department has developed the following recommended planning and reporting requirements.

II. Desired Focus of Comments

The Department of Labor is particularly interested in comments which:

- Evaluate whether the proposed collection of information is necessary for the proper performance of the functions of the agency, including whether the information will have practical utility;
- Evaluate the accuracy of the agency's burden estimate for the proposed collection of information, including the validity of the methodology and assumptions used;
- Enhance the quality, utility, and clarity of the information to be collected; and
- Minimize the burden of the collection of information on those who are to respond, including the use of appropriate automated, electronic, mechanical, or other technological collection techniques or other forms of information technology, *e.g.,* permitting electronic submissions of responses.

III. Current Action

This proposed ICR will be used by approximately 10 Workforce Investment Act (WIA) section 167 (d) youth grantees as the primary reporting and performance measurement vehicle for enrolled youths, their characteristics, training and services provided, outcomes, including job placement and retention, and attainment of basic skills, as well as detailed financial data on program expenditures.

Type of Review: New.

Agency: Employment and Training Administration.

Title: Planning, reporting, and performance system for WIA title I–D, Section 167(d) National Farmworker Jobs Program youth grantees.

OMB Number: 1205–0NEW.

Catalog of Federal Domestic Assistance Number:

Record Keeping: Grantees shall retain supporting and other documents necessary for the compilation and submission of the subject reports for three years after submission of the final financial report for the grant in question [29 CFR 97.42 and/or 29 CFR 95.53].

Affected Public: State agencies; private, non-profit corporations.

Cite/Reference/Form/etc.: The collection instrument is the Youth, Title I–D, Section 167 National Farmworker Jobs Programs Planning, Reporting, and Performance System and related instructions. OMB-approved forms are provided for use in gathering information at the grantee field office level.

Total Respondents: 10.

Frequency: Annually for planning information; quarterly for both financial information and participation and characteristics information.

Total Annual Responses:

Planning—30 (one narrative, one Budget Information Summary, and one Program Planning Summary per grantee per year).

Participant Reporting—40 (one Program Status Summary per quarter, per grantee per year).

Participant Record Keeping (NFJP SPIR)—5,000 records.

There are four statutorily-required quarterly financial status reports per grantee per year, by year of appropriation. At this time, it is anticipated that the Standard Form (SF) 269 will be used to fulfill this requirement. Therefore, no separate collection/burden information for this standard form is being included here. For participation and characteristics information, there are four quarterly submissions per year, regardless of the year(s) of funding expended during the program year. There is only one format for the participation and characteristics report.

Average Time per Grantee Response:

Annual Plan—5 hours (narrative only).

Budget Information Summary (BIS)—15 hours; [ETA 8595].

Program Planning Summary (PPS)—15 hours; [ETA 8596].

Program Status Summary (PSS)—7 hours; [ETA 8598].

Record Keeping (SPIR)—3 hours (per participant record).

The individual time per response varies widely depending on the degree of automation attained by individual grantees. Grantees also vary according to

the numbers of individuals served in each program year. If the grantee has a fully-developed and automated MIS, the response time is limited to one-time programming plus processing time for each response.

Estimated Total Annual Burden Hours:

Total Burden Hours—15,630 hours per year.

Planning narrative (NFJP)—10 responses times 5 hours per response equals 50 burden hours.

BIS (NFJP)—10 responses times 15 hours per response equals 150 burden hours.

PPS (NFJP)—10 responses times 15 hours per response equals 150 burden hours.

PSS (NFJP)—4 responses per grantee times 7 hours per response times 10 grantees equals 280 burden hours.

Record Keeping (NFJP SPIR)—5,000 files times 3 hours per file equals 15,000 hours.

Even though no burden estimate for the SF–269 is included here, it should be noted that expenditures must be reported on by year of appropriation, regardless of the year in which the funds were expended. Thus, if more that one year's appropriation is expended in a given quarter, two FSR's (or more) must be submitted for that period.

Total Burden Cost (capital/startup): $–0–.

Total Burden Cost (operating/maintaining):

Youth Title I–D National Farmworker Jobs Program—15,630 hours times $15.00 per hour equals $224,450.00.

Costs may vary widely among grantees, from nearly no additional cost to some higher figure, depending on the state of automation attained by each grantee and the wages paid to the staff actually completing the various forms. All costs associated with the submission of these forms are allowable grant expenses.

Comments submitted in response to this request will be summarized and/or included in the Office of Management and Budget request for approval of the information collection. All comments will become a matter of public record.

Signed at Washington, DC, this 11th day of January, 2001.

James C. DeLuca,

Acting Director, Office of National Programs.

[FR Doc. 01–1445 Filed 1–17–01; 8:45 am]

BILLING CODE 4510–30–P

DEPARTMENT OF LABOR

Pension and Welfare Benefits Administration

Proposed Extension of Information Collection; Comment Request; ERISA Technical Release 91–1

ACTION: Notice.

SUMMARY: The Department of Labor, as part of its continuing effort to reduce paperwork and respondent burden, conducts a preclearance consultation program to provide the general public and Federal agencies with an opportunity to comment on proposed and continuing collections of information in accordance with the Paperwork Reduction Act of 1995 (PRA 95) (44 U.S.C. 3506(c)(2)(A)). This helps to ensure that requested data can be provided in the desired format, reporting burden (time and financial resources) is minimized, collection instruments are clearly understood, and the impact of collection requirements on respondents can be properly assessed.

Currently, the Pension and Welfare Benefits Administration is soliciting comments concerning the extension of the information collection request (ICR) incorporated in its Technical Release 91–1 related to the transfer of excess assets from a defined benefit plan to a retiree health benefits account. A copy of the ICR may be obtained by contacting the office listed in the addresses section of this notice.

DATES: Written comments must be submitted to the office shown in the addresses section below on or before March 19, 2001.

ADDRESSES: Gerald B. Lindrew, Office of Policy and Research, U.S. Department of Labor, Pension and Welfare Benefits Administration, 2000 Constitution Avenue, NW., Room N–5647, Washington, DC 20210. Telephone: (202) 219–4782; Fax: (202) 219–4745. These are not toll-free numbers.

SUPPLEMENTARY INFORMATION:

I. Background

ERISA section 101(e) sets forth certain notice requirements which must be satisfied before an employer may transfer excess assets from a defined benefit plan to a retiree health benefits account as otherwise permissible after satisfying the conditions set forth in section 420 of the Internal Revenue Code of 1986, as amended (Code). Section 101(e)(1) describes the plan administrator's obligation to provide advance written notification of such transfers to participants and beneficiaries. Section 101(e)(2)(A) describes the employer's obligation to provide advance written notification to the Secretaries of Labor and Treasury, the administrator, and each employee organization representing participants in the plan. The requirements relating to advance notification of transfers to retiree health benefit accounts were added to ERISA as part of the Omnibus Budget Reconciliation Act of 1990 (Pub. L. 101–508). The ICR included in ERISA Technical Release 9–1 provides guidance on the type of information to be provided in the notices to both the participants and beneficiaries and the Secretaries.

II. Desired Focus of Comments

The Department is particularly interested in comments that:

- Evaluate whether the proposed collection of information is necessary for the proper performance of the functions of the agency, including whether the information will have practical utility;
- Evaluate the accuracy of the agency's estimate of the burden of the proposed collection of information, including the validity of the methodology and assumptions used;
- Enhance the quality, utility, and clarity of the information to be collected; and
- Minimize the burden of the collection of information on those who are to respond, including through the use of appropriate automated, electronic, mechanical, or other technological collection techniques or other forms of information technology, e.g., permitting electronic submission of responses.

III. Current Action

This notice requests comments on the extension of the ICR included in ERISA Technical Release 91–1. The Department is not proposing or implementing changes to the existing ICR at this time.

Type of Review: Extension of a currently approved collection of information.

Agency: Pension and Welfare Benefits Administration, Department of Labor.

Titles: ERISA Technical Release 91–1.

OMB Number: 1210–0084.

Affected Public: Individuals or households; Business or other for-profit; Not-for-profit institutions.

Respondents: 66.

Frequency of Response: One time.

Responses: 231,000.

Estimated Total Burden Hours: 5,775.

Total Burden Cost (Operating and Maintenance): $90,000.

Comments submitted in response to this notice will be summarized and/or

included in the request for OMB approval of the information collection request; they will also become a matter of public record.

Dated: January 11, 2001.

Gerald B. Lindrew,

Deputy Director, Office of Policy and Research, Pension and Welfare Benefits Administration.

[FR Doc. 01–1448 Filed 1–17–01; 8:45 am]

BILLING CODE 4510–29–M

DEPARTMENT OF LABOR

Pension and Welfare Benefits Administration

Proposed Extension of Information Collection; Comment Request; Prohibited Transaction Exemption 92–6

ACTION: Notice.

SUMMARY: The Department of Labor, as part of its continuing effort to reduce paperwork and respondent burden, conducts a preclearance consultation program to provide the general public and Federal agencies with an opportunity to comment on proposed and continuing collections of information in accordance with the Paperwork Reduction Act of 1995 (PRA 95) (44 U.S.C. 3506(c)(2)(A)). This helps to ensure that requested data can be provided in the desired format, reporting burden (time and financial resources) is minimized, collection instruments are clearly understood, and the impact of collection requirements on respondents can be properly assessed.

Currently, the Pension and Welfare Benefits Administration is soliciting comments concerning the information collection request (ICR) incorporated in Prohibited Transaction Class Exemption 92–6 (PTCE 92–6), pertaining to the sale of individual life insurance or annuity contracts by a plan. A copy of the ICR may be obtained by contacting the office listed in the addresses section of this notice.

DATES: Written comments must be submitted to the office shown in the **ADDRESSES** section below on or before March 19, 2001.

ADDRESSES: Gerald B. Lindrew, Office of Policy and Research, U.S. Department of Labor, Pension and Welfare Benefits Administration, 200 Constitution Avenue, NW., Room N–5647, Washington, DC 20210. Telephone: (202) 219–4782; Fax: (202) 219–4745. These are not toll-free numbers.

SUPPLEMENTARY INFORMATION:

I. Background

Prohibited Transaction Class Exemption 92–6 exempts from the prohibited transaction restrictions of the Employee Retirement Security Act of 1974 (ERISA) the sale of individual life insurance or annuity contracts by a plan to participants, relatives of participants, employers any of whose employees are covered by the plan, other employee benefit plans, owner-employees or shareholder-employees. In the absence of this exemption, certain aspects of these transactions might be prohibited by section 406 of ERISA.

Recordkeeping requirements incorporated within the class exemption are intended to protect the interests of plan participants and beneficiaries. The disclosure requirements protect plan participants by putting them on notice of the plan's intention to sell insurance or annuity contracts under which they are insured, and by giving the participants the right of first refusal to purchase such contracts.

II. Desired Focus of Comments

The Department is particularly interested in comments which:

- Evaluate whether the proposed collection of information is necessary for the proper performance of the functions of the agency, including whether the information will have practical utility;
- Evaluate the accuracy of the agency's estimate of the burden of the proposed collection of information, including the validity of the methodology and assumptions used;
- Enhance the quality, utility, and clarity of the information to be collected; and
- Minimize the burden of the collection of information on those who are to respond, including through the use of appropriate automated, electronic, mechanical, or other technological collection techniques or other forms of information technology, *e.g.,* permitting electronic submission of responses.

III. Current Action

This notice requests comments on the extension of the ICR included in PTCE 92–6. The Department is not proposing or implementing changes to the existing ICR at this time.

Type of Review: Extension of currently approved collection of information.

Agency: Pension and Welfare Benefits Administration.

Title: Prohibited Transaction Class Exemption 92–6.

OMB Number: 1210–0063.

Affected Public: Individuals or households; business or other for-profit; not-for-profit institutions

Respondents: 76,560.

Frequency of Response: On occasion.

Responses: 7,656.

Estimated Total Burden Hours: 1,276.

Estimated Burden Cost (Operating and Maintenance): $2,833.

Comments submitted in response to this notice will summarized and/or included in the request for OMB approval of the information collection request; they will also become a matter of public record.

Dated: January 11, 2001.

Gerald B. Lindrew,

Deputy Director, Office of Policy and Research, Pension and Welfare Benefits Administration.

[FR Doc. 01–1449 Filed 1–17–01; 8:45 am]

BILLING CODE 4510–29–M

DEPARTMENT OF LABOR

Pension and Welfare Benefits Administration

Proposed Extension of Information Collection; Comment Request; Regulation Regarding Participant Directed Individual Account Plans Under ERISA 404(c)

ACTION: Notice.

SUMMARY: The Department of Labor, as part of its continuing effort to reduce paperwork and respondent burden, conducts a preclearance consultation program to provide the general public and Federal agencies with an opportunity to comment on proposed and continuing collections of information in accordance with the Paperwork Reduction Act of 1995 (PRA 95) (44 U.S.C. 3506(c)(2)(A)). This helps to ensure that requested data can be provided in the desired format, reporting burden (time and financial resources) is minimized, collection instruments are clearly understood, and the impact of collection requirements on respondents can be properly assessed.

Currently, the Pension and Welfare Benefits Administration is soliciting comments concerning the extension of the information collection request (ICR) incorporated in a regulation pertaining to participant directed individual account plans under section 404(c) of the Employee Retirement Income Security Act of 1974 (ERISA). A copy of the ICR may be obtained by contacting the office listed in the addresses section of this notice.

DATES: Written comments must be submitted to the office shown in the

ADDRESSES section below on or before March 19, 2001.

ADDRESSES: Gerald B. Lindrew, Office of Policy and Research, U.S. Department of Labor, Pension and Welfare Benefits Administration, 200 Constitution Avenue, NW, Room N–5647, Washington, D.C. 20210. Telephone: (202) 219–4782; Fax: (202) 219–4745. These are not toll-free numbers.

SUPPLEMENTARY INFORMATION:

I. Background

Section 404(c) of ERISA provides that if an individual account pension plan permits a participant or beneficiary to exercise control over assets in his account and the participant or beneficiary in fact exercises such control, that participant or beneficiary shall not be deemed to be a fiduciary by such exercise of control, and that no person otherwise a fiduciary shall be liable for any loss or breach that results from this exercise of control.

The opportunity to exercise control includes the opportunity to obtain sufficient information to make informed decisions with respect to investment alternatives. This regulation describes the type and extent of information required to be made available to participants and beneficiaries for this purpose. In the absence of such disclosures, participants might not be able to make informed decisions about investing their individual accounts, and persons who are otherwise fiduciaries with respect to these plans would not be afforded relief from the fiduciary responsibility provisions of Title I of ERISA with respect to these transactions.

II. Desired Focus of Comments

The Department is particularly interested in comments which:

- Evaluate whether the proposed collection of information is necessary for the proper performance of the functions of the agency, including whether the information will have practical utility;
- Evaluate the accuracy of the agency's estimate of the burden of the proposed collection of information, including the validity of the methodology and assumptions used;
- Enhance the quality, utility, and clarity of the information to be collected; and
- Minimize the burden of the collection of information on those who are to respond, including through the use of appropriate automated, electronic, mechanical, or other technological collection techniques or other forms of information technology, *e.g.*, permitting electronic submission of responses.

III. Current Action

This notice requests comments on the extension of the ICR included in the regulation pertaining to participant directed individual account plans under Section 404(c) of ERISA. The Department is not proposing or implementing changes to the existing ICR at this time.

Type of Review: Extension of a currently approved collection of information.

Agency: Pension and Welfare Benefits Administration, Department of Labor.

Title: Regulation Regarding Participant Directed Individual Account Plans (ERISA section 404(c) Plans).

OMB Number: 1210–0090.

Affected Public: Individuals or households; business or other for-profit institutions.

Respondents: 294,800.

Frequency of Response: On occasion.

Responses: 294,800.

Estimated Total Burden Hours: 52,900.

Total Burden Cost (Operating and Maintenance): $23.1 million.

Comments submitted in response to this notice will be summarized and/or included in the request for OMB approval of the information collection request; they will also become a matter of public record.

Dated: January 11, 2001.

Gerald B. Lindrew,

Deputy Director, Office of Policy and Research, Pension and Welfare Benefits Administration.

[FR Doc. 01–1450 Filed 1–17–01; 8:45 am]

BILLING CODE 4510–29–M

NATIONAL AERONAUTICS AND SPACE ADMINISTRATION

[Notice 01–006]

Notice of Prospective Patent License

AGENCY: National Aeronautics and Space Administration.

ACTION: Notice of prospective patent license.

SUMMARY: NASA hereby gives notice that Nascent Technology Solutions, LLC, of Hampton, VA, has applied for an exclusive license to practice the invention disclosed in U.S. Patent No. 5,393,980 entitled ''QUALITY MONITOR AND MONITORING TECHNIQUE EMPLOYING OPTICALLY STIMULATED ELECTRON EMISSION,'' which has been assigned to the United States of America as represented by the Administrator of the National Aeronautics and Space Administration. Written objections to the prospective grant of a license should be sent to Langley Research Center.

DATES: Responses to this notice must be received by March 19, 2001.

FOR FURTHER INFORMATION CONTACT: Helen M. Galus, Patent Attorney, Langley Research Center, Mail Code 212, Hampton, VA 23681–2199; telephone (757) 864–3227.

Dated: January 9, 2001.

Edward A. Frankle,

General Counsel.

[FR Doc. 01–1472 Filed 1–17–01; 8:45 am]

BILLING CODE 7510–01–P

NUCLEAR REGULATORY COMMISSION

Sunshine Act Meeting

AGENCY HOLDING THE MEETING: Nuclear Regulatory Commission.

DATE: Weeks of January 15, 22, 29, February 5, 12, 19, 2001.

PLACE: Commissioners' Conference Room, 11555 Rockville Pike, Rockville, Maryland.

STATUS: Public and Closed.

MATTERS TO BE CONSIDERED:

Week of January 15, 2001

Wednesday, January 17, 2001

9:25 a.m.—Affirmation Session (Public Meeting) (Tentative), a: Sequoyah Fuels Corporation (Gore, Oklahoma Site, Decommissioning) Docket No. 40–8027–MLA–4.

9:30 a.m.—Briefing on Status of Nuclear Reactor Safety (Public Meeting) (Contact: Mike Case, 301–415–1134).

This meeting will be webcast live at the Web address—*www.nrc.gov/live.html*

Week of January 22, 2001—Tentative

There are no meetings scheduled for the Week of January 22, 2001.

Week of January 29, 2001—Tentative

Tuesday, January 30, 2001

9:30 a.m.—Briefing on Status of Nuclear Waste Safety (Public Meeting) (Contact: Claudia Seelig, 301–415–7243).

This meeting will be webcast live at the Web address—*www.nrc.gov/live.html*

Wednesday, January 31, 2001

9:25 a.m.—Affirmation Session (Public Meeting) (If needed).

9:30 a.m.—Briefing on Status of OCIO Programs, Performance, and Plans (Public Meeting) (Contact: Donnie Grimsley, 301–415–8702).

This meeting will be webcast live at the Web address—*www.nrc.gov/live.html*

Thursday, February 1, 2001

9:30 a.m.—Briefing on Status of OCFO Programs, Performance and Plans (Public Meeting) (Contact: Lars Solander, 301–415–6080).

This meeting will be webcast live at the Web address—*www.nrc.gov/live.html*

Week of February 5, 2001—Tentative

Monday, February 5, 2001

1:55 p.m.—Affirmation Session (Public Meeting), (If needed).

Week of February 14, 2001—Tentative

Wednesday, February 14, 2001

9:25 a.m.—Affirmation Session (Public Meeting) (If needed).

Week of February 19, 2001—Tentative

Tuesday, February 20, 2001

9:25 a.m.—Affirmation Session (Public Meeting), (If needed).

9:30 a.m.—Briefing on Spent Fuel Pool Accident Risk at Decommissioning Plants and Rulemaking Initiatives (Public Meeting) (Contact: George Hubbard, 301–415–2870).

This meeting will be webcast live at the Web address—*www.nrc.gov/live.html*

* The schedule for Commission meetings is subject to change on short notice. To verify the status of meetings call (recording)—(301) 415–1292. Contact person for more information: David Louis Gamberoni (301) 415–1651.

Additional Information:

By a vote of 5–0 on January 9, and 10, the Commission determined pursuant to U.S.C. 552b(e) and § 9.107(a) of the Commission's rules that ''Affirmation of Private Fuels Storage, L.L.C. (Independent Spent Fuel Storage Installation); State of Utah's Partial Interlocutory Appeal of LBP–00–28'' be held on January 10, and on less than one week's notice to the public.

The NRC Commission Meeting Schedule can be found on the Internet at: http://www.nrc.gov/SECY/smj/schedule.html

This notice is distributed by mail to several hundred subscribers; if you no longer wish to receive it, or would like to be added to it, please contact the Office of the Secretary, Washington, DC 20555 (301–415–1969). In addition, distribution of this meeting notice over the Internet system is available. If you are interested in receiving this Commission meeting schedule electronically, please send an electronic message to dkw@nrc.gov.

Dated: January 11, 2001.

David Louis Gamberoni,

Technical Coordinator, Office of the Secretary.

[FR Doc. 01–1592 Filed 1–16–01; 10:53 am]

BILLING CODE 7590–01–M

SECURITIES AND EXCHANGE COMMISSION

[Release No. 35–27336; 70–9633]

Filings Under the Public Utility Holding Company Act of 1935, as Amended (''Act'')

January 11, 2001.

Notice is hereby given that the following filing(s) has/have been made with the Commission pursuant to provisions of the Act and rules promulgated under the Act. All interested persons are referred to the application(s) and/or declaration(s) for complete statements of the proposed transaction(s) summarized below. The application(s) and/or declaration(s) and any amendment(s) is/are available for public inspection through the Commission's Branch of Public Reference.

Interested persons wishing to comment or request a hearing on the application(s) and/or declaration(s) should submit their views in writing by February 2, 2001, to the Secretary, Securities and Exchange Commission, Washington, DC 20549–0609, and serve a copy on the relevant applicant(s) and/or declarant(s) at the address(es) specified below. Proof of service (by affidavit or, in the case of an attorney at law, by certificate) should be filed with the request. Any request for hearing should identify specifically the issues of facts or law that are disputed. A person who so requests will be notified of any hearing, if ordered, and will receive a copy of any notice or order issued in the matter. After February 2, 2001, the application(s) and/or declaration(s), as filed or as amended, may be granted and/or permitted to become effective.

Unitil Corporation, et al. (70–9633)

Unitil Corporation (''Unitil''), a registered holding company, and its subsidiary companies, Concord Electric Company, Exeter & Hampton Electric Company, Fitchburg Gas and Electric Light Company (''Fitchburg''), Unitil Power Corp., Unitil Realty Corp., Unitil Resources, Inc. and Unitil Services Corp. (collectively, ''Subsidiaries'' and, together with Unitil, ''Applicants''), all located at 6 Liberty Lane West, Hampton, New Hampshire 03842–1720, have filed a post-effective amendment under sections 6(a), 7, 9(a), 10 and 12(b) of the Act and rules 43 and 45 under the Act, to a previously filed application-declaration.

By orders dated June 30, 1997, June 9, 2000, and December 15, 2000 (HCAR Nos. 26737, 27182, and 27307, respectively) (''Prior Orders''), the Commission authorized through June 30, 2003 (''Authorization Period''): (1) The Applicants to make unsecured short-term borrowings and to operate a system money pool (''Money Pool''); (2) Unitil to incur short-term borrowings from banks in an aggregate amount not to exceed $35 million (''Unitil Borrowing Authority''); and (3) Fitchburg to incur short-term borrowings from third parties and the other Applicants through the Money Pool in an aggregate amount not to exceed $20 million (''Fitchburg Borrowing Authority'').

Applicants seek approval through the Authorization Period to increase: (1) the Unitil Borrowing Authority to $45 million and (2) the Fitchburg Borrowing Authority to $30 million. Applicants state that the requested increases in Unitil Borrowing Authority and Fitchburg Borrowing Authority will remain subject to the parameters as set forth in the Prior Orders.

Applicants state that the prices Unitil's subsidiaries, Unitil Power and Fitchburg, pay for wholesale electric and natural gas energy commodities have become unpredictably volatile. According to Applicants, the prices have risen sharply, putting a heavy strain on Unitil's working capital and significantly increasing its short-term borrowing requirements. Applicants state that the requested authorization is necessary to satisfy the cost of their wholesale energy obligations.

For the Commission by the Division of Investment Management, pursuant to delegated authority.

Jonathan G. Katz,

Secretary.

[FR Doc. 01–1404 Filed 1–17–01; 8:45 am]

BILLING CODE 8010–01–M

SECURITIES AND EXCHANGE COMMISSION

[Rel. No. IC–24824; File No. 812–12350]

Cova Series Trust, et al.

January 11, 2001.

AGENCY: Securities and Exchange Commission (the ''Commission'').

ACTION: Notice of Application under Section 17(b) of the Investment Company Act of 1940 (the ''1940 Act'') for an exemption from Section 17(a) of the Act.

Summary of Application: Applicants request an order to permit certain series of Met Investors Series Trust (''MIT'') to acquire all of the assets and liabilities of Cova Series Trust (''CST'') and Securities First Trust (''SFT''). Because of certain affiliations, applicants may not rely on Rule 17a–8 under the Act.

Applicants: CST, SFT, MIT, Cova Financial Services Life Insurance Company (''Cova Financial Services Life''), Cova Financial Life Insurance Company (''Cova Financial Life'', together with Cova Financial Services Life, ''Cova Life''), Security First Life Insurance Company (''Security First Life'') and Firstar Investment Research & Management Company, LLC (''FIRMCO'').

Filing Dates: The application was filed on December 6, 2000.

Hearing or Notification of Hearing: An order granting the application will be issued unless the Commission orders a hearing. Interested persons may request a hearing by writing to the Secretary of the Commission and serving Applicants with a copy of the request, personally or by mail. Hearing request should be received by the Commission by 5:30 p.m. on February 2, 2001, and should be accompanied by proof of service on Applicants, in the form of an affidavit or, for lawyers, a certificate of service. Hearing requests should state the nature of the writer's interest, the reason for the request, and the issues contested. Persons who wish to be notified of a hearing may request notification by writing to the Secretary of the Commission.

ADDRESSES: Secretary, Securities and Exchange Commission, 450 Fifth Street, N.W., Washington, D.C. 20549–0609. Applicants: Cova Series Trust, Cova Financial Services Life Insurance Company and Cova Financial Life Insurance Company, One Tower Lane, Suite 3000, Oakbrook Terrace, Illinois, 60181; Security First Trust and Security First Life Insurance Company, 11365 W. Olympic Boulevard, Los Angeles, California 90064; Met Investors Series Trust, 610 Newport Centre Drive, Suite 1350, Newport Beach, California 92660; and Firstar Investment Research & Management Company, LLC, 777 E. Wisconsin Avenue, Suite 800, Oakbrook Terrace, Illinois 60181; Stacy H. Ostrowski, Esq., Sullivan & Worcester LLP, 1025 Connecticut Avenue, NW., Suite 1000, Washington, DC 20036.

FOR FURTHER INFORMATION CONTACT: Joyce M. Pickholz, Senior Counsel, or Keith E. Carpenter, Branch Chief, Office of Insurance Products, Division of Investment Management, at (202) 942–0670.

SUPPLEMENTARY INFORMATION: The following is a summary of the application. The complete application is available for a fee from the Commission's Public Reference Branch, 450 Fifth Street, NW., Washington, DC 20549–0102 (tel. (202) 942–8090).

Applicants' Representations

1. CST is a Massachusetts business trust registered under the 1940 Act as an open-end management investment company and is presently comprised of thirteen separate series, all of which are involved in the proposed transactions. Shares of each portfolio of CST are sold only to certain accounts of Cova Life and its affiliates to fund benefits under certain individual flexible premium and modified single premium variable life insurance policies and certain individual and group variable annuity contracts (''Variable Contracts'') issued by Cova Life and its affiliates. As of the date of the application, Cova Life and its affiliates are the majority, and in most cases, the only shareholders of record of the Cova Portfolios.[1] CST, along with its series, are referred to herein collectively, as the ''Cova Portfolios.''

2. SFT is a Massachusetts business trust registered under the 1940 Act as an open-end management investment company and is presently comprised of four separate series. Shares of each series of SFT are sold only to certain accounts of Security First Life to fund benefits under certain Variable Contracts issued by Security First Life and to qualified pension and retirement plans. As of the date of this application, Security First Life's Separate Account A, its group employee 401(k) plan and its General Account are the only shareholders of record of the series of SFT. All four series are involved in the proposed transactions. SFT, along with its series, are referred to herein collectively, as the ''Security First Portfolios'' and collectively with the Cova Portfolios as the ''Acquired Portfolios.''

3. MIT is a newly created Delaware business trust registered under the 1940 Act as an open-end management investment company comprised of fourteen separate series which were established for purposes of the proposed transactions described herein. If shareholders approve the proposed transaction, MIT will be the surviving entity after the Cova and Security First Portfolios are merged into corresponding investment portfolios of MIT. A Registration Statement on Form N–1A was filed with the Commission for the newly created MIT and its series on October 23, 2000 and will become effective on the closing date of the proposed transactions. All of MIT's series are involved in the proposed transactions for which exemptive relief is being sought. MIT and its series are referred to herein collectively as the ''Met Portfolios'' and as the ''Acquiring Portfolios.''

4. Met Investors Advisory Corp. (formerly known as Security First Investment Management Corporation) (''Met Advisor'') serves as investment adviser to SFT and will be the investment adviser to MIT but has delegated responsibility for the day-to-day management of the series to various unaffiliated sub-adviser. Met Advisory is a wholly-owned subsidiary of Security First Group, Inc. (''SFG''). SFG (which on or before February 5, 2001, will change its name to Met Investors Group, Inc.) is an indirect wholly-owned subsidiary of Metropolitan Life Insurance Company, a New York life insurance company (''MetLife''). Met Advisory is registered as an investment adviser under the Investment Advisers Act of 1940, as amended (the ''Advisers Act'').

5. Cova Investment Advisory Corporation (''Cova Advisory'') serves as investment adviser to CST but has delegated responsibility for the day-to-day management of the series to certain unaffiliated investment sub-advisers.[2] Cova Advisory is an indirect wholly-owned subsidiary of MetLife. Cova Advisory is registered as an investment adviser under the Advisers Act.

6. Security First Life is a stock life insurance company founded in 1960 and organized under the laws of the State of Delaware. Security First Life is authorized to transact the business of life insurance, including annuities, and is currently licensed to do business in 49 states and the District of Columbia. Security First Life is a wholly-owned subsidiary of SFG.

7. Cova Financial Services Life is a stock life insurance company founded in 1981 and organized under the laws of

[1] For ease of reference, the term ''shareholder'' is used hereinafter to refer to Variable Contract owners that are unit holders of any registered separate account that invests in a respective SFT Portfolio or Cova Portfolio (as defined herein).

[2] Shares of certain of the Cova Portfolios are held by their respective unaffiliated sub-advisers, including FIRMCO as discussed herein.

the State of Missouri. Cova Financial Life, is a stock insurance company founded in 1972 and organized under the laws of the State of California. Cova Financial Services Life and Cova Financial Life are indirect wholly-owned subsidiaries of Met Life. Cova Life and its affiliates are authorized to transact the business of life insurance, including annuities, and among them are currently licensed to do business in 47 states and the District of Columbia.

8. FIRMCO currently serves as the investment sub-adviser to the Balanced, Equity Income and the Growth & Income Equity Portfolios of CST and will serve as investment adviser to the Firstar Balanced, Firstar Equity Income and the Firstar Growth & Income Equity Portfolios (collectively the ''Firstar Portfolios'') of the newly created MIT. FIRMCO is a subsidiary of Firstar Corporation. FIRMCO is registered as an investment adviser under the Advisers Act. FIRMCO currently owns of record 5% or more of each of the Balanced, Equity Income and Growth & Income Equity Portfolios of CST.

9. On November 1, 2000 and November 2, 2000, the Boards of Trustees of the Acquired Portfolios, including a majority of the Trustees who are not interested persons under Section 2(a)(19) of the 1940 Act (the ''Disinterested Trustees''), authorized agreements and plans of reorganization (with respect to the Fund Reorganizations as defined below) (the ''Plans'') pursuant to which certain series of MIT will acquire all of the assets and stated liabilities of certain series of CST and SFT. Pursuant to the terms of the Plans, the Acquired Portfolios have agreed to sell all of their assets (subject to the assumption of certain stated liabilities) to certain corresponding Acquiring Portfolios in exchange for shares of the Acquiring Portfolios (the ''Fund Reorganizations''). The exchange will take place at the respective net asset values calculated as of the close of business on the business day next preceding the date on which the Fund Reorganizations will occur. Shareholders of the Acquired Portfolios will exchange their shares for Class A shares of the Acquiring Portfolios. As a result of the Fund Reorganizations, each Acquired Portfolio shareholder will receive Acquiring Portfolio shares having an aggregate net asset value equal to the aggregate net asset value of the corresponding Acquired Portfolio's shares held by that shareholder. After the distribution of the Acquiring Portfolios' shares and the winding up of the Acquired Portfolios' business, the Acquired Portfolios will be liquidated.

10. No sales charge will be imposed in connection with Class A shares of the Acquiring Portfolios received by the Acquired Portfolios' shareholders. Accordingly, no sales charges will be incurred by shareholders of the Acquired Portfolios in connection with their acquisition of shares of the Acquiring Portfolios in the Fund Reorganizations. Upon consummation of the transactions described above, each Acquired Portfolio will distribute its full and fractional shares of the Acquiring Portfolio *pro rata* to its shareholders of record, determined as of the exchange date.

11. Prior to the Fund Reorganizations, the shareholders of the Acquired Portfolio and the Acquiring Portfolio will hold shares with similar characteristics. Shares of the Acquired Portfolios and Class A shares of the Acquiring Portfolios are sold without a front-end sales charge or a contingent deferred sales charge and are not subject to any Rule 12b–1 fees.

12. The investment objectives of each of the Acquired Portfolios is generally either identical to or similar to that of the corresponding Acquiring Portfolios. The investment strategies of each Acquired Portfolio and its corresponding acquiring Portfolio generally are also either identical or similar.

13. Each Plan may be terminated by the mutual agreement of the Boards of the Portfolios on behalf of the Acquiring Portfolio and the Acquired Portfolio, respectively.

14. The Boards of CST and SFT, on behalf of each of the Acquired Portfolios, including in each case a majority of Disinterested Trustee, approved the Fund Reorganization as in the best interests of shareholders and determined that the interests of existing shareholders will not be diluted as a result of the Fund Reorganizations. The Board of each Portfolio considered, among other things, (a) the terms and conditions of each Fund Reorganization; (b) whether the Fund Reorganization would result in the dilution of shareholders' interests; (c) the expense ratios, fees and expenses of the Acquiring Portfolios before the Fund Reorganization and the estimated expense ratios of the Acquiring Portfolios after the Reorganization; (d) comparability of the Acquiring and Acquiring Portfolios' investment restrictions; (e) the investment experience, expertise and resources of the investment advisers; (f) the service and distribution resources available to MIT and the anticipated increased array of investment alternatives available to shareholders of MIT; (g) the fact that the costs estimated to be incurred by the Portfolios as a result of the Fund Reorganizations will not be borne by the Portfolios but will be borne by MetLife or an affiliate; and (h) the expected federal income tax consequences of the Fund Reorganizations.

15. Each Fund Reorganization is subject to the approval of the Acquiring Portfolios shareholders. Special Meetings of the Shareholders of the Acquired Portfolios are scheduled to be held on or about January 26, 2000. Cova Life and its affiliates and Security First Life will vote all shares of the Acquired Portfolios in accordance with and in proportion to timely voting instructions received from Variable Contract owners participating in separate accounts requistered under the 1940 Act, the value of which are invested in shared of the Acquired Portfolio through such separate accounts at the record date. Shares of each Acquired Portfolio for which properly executed voting instructions are not received, including shares not attributable to Variable Contracts, will be voted in the same proportion as that of shares of such Acquired Portfolio for which instructions are received. Proxy materials have been mailed to the Variable Contract owners participating in registered separate accounts holding shares of the Acquired Portfolios. Proxies are not being solicited from 401(k) plan participants or any investment sub-advisers who hold shares of a Portfolio. The 401(k) plan fiduciary will vote its shares in proportion to the vote of Variable Contract owners.

16. Fund Reorganizations also are subject to the approval of the board of trustees of MIT (the ''MIT Board''), on behalf of each of the Acquiring Portfolios, including in each case a majority of Disinterested Trustees. Prior to consummating the Fund Reorganization, the MIT Board will have reviewed the terms of the Fund Reorganizations and will have determined that the transactions are in the best interests of the Acquiring Portfolios. In approving the Plans, the Board will consider the relevant factors including, but not limited to those factors considered by the CST and SFT Boards.

17. MetLife or an affiliate will be responsible for the expenses incurred in connection with the Fund Reorganizations.

18. The Plans are subject to a number of conditions precedent, including requirements that (a) the Plans shall have been approved by the Boards on behalf of each of the Acquiring Portfolios and the Acquired Portfolio

and approved by the requisite votes of the holders of the outstanding shares of each of the Acquired Portfolios in accordance with the provisions of each Portfolio's Agreement and Declaration of Trust and By-laws; (b) the Acquired Portfolio and the Acquiring Portfolio have received opinions of counsel stating, among other things, that (i) each Fund Reorganization will constitute a ''fund reorganization'' under Section 368 of the Internal Revenue Code of 1986, as amended (the ''Code''), (ii) the Acquiring Portfolio and the Acquired Portfolio is a ''party to a fund reorganization'' within the meaning of Section 368 of the Code, (iii) no gain or loss will be recognized by the Acquiring Portfolio upon the receipt of the assets of the Acquired Portfolio solely in exchange for the Acquiring Portfolio shares and the assumption by the Acquiring Portfolio of the identified liabilities of the Acquired Portfolio and (iv) no gain or loss will be recognized by the Acquired Portfolio upon the transfer of the Acquired Portfolio's assets to the Acquiring Portfolio in exchange for the Acquiring Portfolio shares and the assumption by the Acquiring Portfolio of the identified liabilities of the Acquired Portfolio or upon the distribution of the Acquiring Portfolio shares to Acquired Portfolio shareholders in exchange for their shares of the Acquired Portfolio; and (c) the Acquired Portfolio and the Acquiring Portfolio shall have received from the Commission an order exempting the Fund Reorganizations from the provisions of Section 17(a) of the 1940 Act.

Applicants' Legal Analysis

1. Section 17(a) of the 1940 Act provides, in pertinent part, that it is unlawful for any affiliated person of a registered investment company, or any affiliated person of such a person, ''(1) knowingly to sell any security or other property to such registered company * * * [or] (2) knowingly to purchase from such registered company * * * any security or other property * * *'' Section 2(a)(3) of the 1940 Act defines the term ''affiliated person'' of another person in include, in pertinent part, ''(A) any person directly or indirectly owning, controlling, or holding with power to vote, 5 per centum or more of the outstanding voting securities of such other person; (B) any person 5 per centum or more of whose outstanding voting securities are directly or indirectly owned, controlled, or held with power to vote, by such other person; (C) any person directly or indirectly controlling, controlled by, or under common control with, such other person * * *; and (E) if such other person in an investment company, any is an investment advises thereof * * *''

2. Applicants assert that Rule 17a–8 under the 1940 Act may not be available to exempt the proposed transactions described herein. The premise of Rule 17a–8 is that the investment companies involved in mergers or consolidations are under common control by virtue of having a common investment adviser, directors and/or officers and no other affiliation exists. In this case, certain of the Portfolios may be deemed to be affiliated persons or affiliated persons of each other because of the Insurance Companies and FIRMCO's share ownership of the Portfolios.

3. Section 17(b) of the 1940 Act provides that, notwithstanding Section 17(a), any person may file with the Commission an application for an order exempting a proposed transaction from one or more provisions of that subsection and that the Commission shall grant such application and issue such order of exemption if evidence establishes that ''(1) the terms of the proposed transaction, including the consideration to be paid or received, are reasonable and fair and do not involve overreaching on the part of any person concerned; (2) the proposed transaction is consistent with the policy of each registered investment company concerned, as recited in its registration statement and reports filed under [the 1940 Act], and (3) the proposed transaction is consistent with the general purpose of [the 1940 Act] * * *.''

4. Applicants submit that the terms of the Fund Reorganizations satisfy the standards set forth in section 17(b), in that the terms are fair and reasonable and do not involve overreaching on the part of any person concerned. Applicants note that the Boards of Trustees of CST and SFT, including the Disinterested Trustees, found that participation in the Fund Reorganization is in the best interests of each Portfolio based on the following factors: (a) The interests of shareholders will not be diluted; (b) the Portfolio's investment objectives and policies generally are substantially similar; (c) certain operational efficiencies may be achieved upon the combination of the Portfolios as a result of the economies of scale associated with a more diverse family of mutual funds; (d) no sales charges will be imposed in connection with the Fund Reorganizations; (e) the service and distribution resources available to MIT and the anticipated increased array of investment alternatives available to shareholders of MIT; (f) the transactions will be free from Federal income taxes; (g) the conditions and policies of Rule 17a–8 under the 1940 Act will be followed; (h) the transfer of securities in exchange for shares will be at relative net asset value; and (i) no overreaching by any person concerned with the transactions will occur.

Conclusion

For the reasons and upon the facts set forth above, Applicants state that the requested order meets the standards set forth in Section 17(b) and should, therefore, be granted.

For the Commission, by the Division of Investment Management, under delegated authority.

Jonathan G. Katz,

Secretary.

[FR Doc. 01–1403 Filed 1–17–01; 8:45 am]

BILLING CODE 8010–01–M

SECURITIES AND EXCHANGE COMMISSION

[Release No. IC–24823 (812–12276)]

PaineWebber PACE Select Advisors Trust and Mitchell Hutchins Asset Management, Inc.; Notice of Application

January 11, 2001.

AGENCY: Securities and Exchange Commission (''Commission'')

ACTION: Notice of application for an order under section 6(c) of the Investment Company Act of 1940 (the ''Act'') to amend a prior order that granted an exemption from section 15(a) of the Act and rule 18f–2 under the Act.

Summary of Application: Applicants request an order amending a prior order (''Prior Order'') that permits them to enter into and materially amend investment sub-advisory contracts without receiving shareholder approval.[1]

Applicants: PaineWebber PACE Select Advisors Trust (formerly, Managed Accounts Services Portfolio Trust) (the ''Trust'') and Mitchell Hutchins Asset Management Inc. (''Mitchell Hutchins'').

Filing Date: The application was filed on November 30, 1999 and amended on January 5, 2001.

Hearing or Notification of Hearing: An order granting the application will be issued unless the Commission orders a hearing. Interested persons may request a hearing by writing to the Commission's Secretary and serving

[1] *Managed Accounts Services Portfolio Trust and Mitchell Hutchins Asset Management, Inc.,* Investment Company Act Release Nos. 21590 (Dec. 15, 1995) (notice) and 21666 (Jan. 11, 1996) (order).

applicants with a copy of the request, personally or by mail. Hearing requests should be received by the Commission by 5:30 p.m. on February 5, 2001, and should be accompanied by proof of service on applicants, in the form of an affidavit, or for lawyers, a certificate of service. Hearing requests should state the nature of the writer's interest, the reason for the request, and the issues contested. Persons who wish to be notified of a hearing may request notification by writing to the Commission's Secretary.

ADDRESSES: Secretary, Commission, 450 Fifth Street, N.W., Washington, D.C. 20549–0609. Applicants: 1285 Avenue of the Americas, New York, New York 10019.

FOR FURTHER INFORMATION CONTACT: Sara P. Crovitz, Senior Counsel, at (202) 942–0667 or Nadya Roytblat, Assistant Director, at (202) 942–0564 (Division of Investment Management, Office of Investment Company Regulation).

SUPPLEMENTARY INFORMATION: The following is a summary of the application. The complete application may be obtained for a fee at the Commission's Public Reference Branch, 450 Fifth Street, N.W., Washington, D.C. 20549–0101, (202) 942–8090.

Applicants' Representations

1. The Trust is an open-end management investment company currently composed of twelve investment portfolios (''Portfolios''). Mitchell Hutchins, a wholly owned subsidiary of PaineWebber, acts as investment manager and administrator to the Trust and is responsible, subject to oversight by the Board of Trustees of the Trust (''Board'') for the selection of investment sub-advisers (''Sub-Advisers'') and the ongoing review of the Sub-Advisers' performance.

2. On January 11, 1996, applicants received the Prior Order permitting the Trust and Mitchell Hutchins to enter into sub-advisory agreements (''Sub-Advisory Agreements'') for the Portfolios without obtaining shareholder approval. Among other things, the Prior Order is subject to a condition that requires a notice, in the form of an information statement, be sent to shareholders following the hiring of a new Sub-Adviser or the implementation of a material change to a Sub-Advisory Agreement. Applicants seek to amend the Prior Order to preserve the requirement to provide notice to shareholders regarding the hiring of a new Sub-Adviser, but to eliminate the requirement to provide a notice in the form of an information statement of other material changes to a Sub-Advisory Agreement. Applicants state that supplements to the Trust's prospectus or statements of additional information serve as a more appropriate and less costly alternative to the latter requirement. Applicants also seek to amend the Prior Order to eliminate the requirement that shares of the Trust be offered exclusively to participants in the PaineWebber PACE Program (the ''Pace Program'') or other asset allocation services.

Applicants' Legal Analysis

1. Section 6(c) of the Act authorizes the Commission to exempt persons or transactions from any provisions of the Act to the extent that such exemptions are necessary or appropriate in the public interest and consistent with the protection of investors and the purposes fairly intended by the policy and provisions of the Act. Applicants submit that amending the Prior Order as requested would be consistent with the standards of section 6(c) of the Act.

Applicants' Conditions

Applicants agree that the order granting the requested relief will be subject to the following conditions:

1. Before a Portfolio may rely on the order, the operation of the Portfolio in the manner described in the application will be approved by a majority of the outstanding voting securities of the Portfolio, as defined in the Act, or in the case of a Portfolio whose public shareholders purchased shares on the basis of a prospectus containing the disclosure contemplated by condition 2 below, by the sole initial shareholder before offering shares of such Portfolio to the public.

2. The Trust will disclose in all prospectuses relating to any Portfolio the existence, substance and effect of any order granted pursuant to the application. In addition, each Portfolio relying on the requested order will hold itself out to the public as employing the management structure described in the application. The prospectus will prominently disclose that Mitchell Hutchins has the ultimate responsibility (subject to oversight by the Board) to oversee the Sub-Advisers and recommend their hiring, termination and replacement.

3. At all times, a majority of the trustees of the Trust will be persons each of whom is not an ''interested person'' of the Trust (as defined in section 2(a)(19) of the Act) (the ''Independent Trustees''), and the nomination of new or additional Independent Trustees will be placed within the discretion of the then existing Independent Trustees.

4. Mitchell Hutchins will not enter into a Sub-Advisory Agreement with any Sub-Adviser that is an affiliated person (as defined in section 2(a)(3) of the Act) of the Trust, Mitchell Hutchins or the Portfolios, other than by reason of serving as a Sub-Adviser to one or more of the Portfolios (the ''Affiliated Sub-Adviser'') without such agreement, including the compensation to be paid thereunder, being approved by the shareholders of the applicable Portfolio.

5. When a Sub-Adviser change is proposed for a Portfolio with an Affiliated Sub-Adviser, the trustees of the Trust, including a majority of the Independent Trustees, will make a separate finding, reflected in the Board minutes, that the change is in the best interests of the Portfolio and its shareholders and does not involve a conflict of interest from which Mitchell Hutchins or the Affiliated sub-Adviser derives an inappropriate advantage.

6. Within 90 days of the hiring of any new SubAdviser, the Trust will furnish shareholders of the applicable Portfolio all information about a new Sub-Adviser that would be included in a proxy statement. Such information will include any change in such disclosure caused by the addition of a new Sub-Adviser. The Trust will meet this condition by providing shareholders with an information statement meeting the requirements of Regulation 14C and Schedule 14C and Item 22 of Schedule 14A under the Securities Exchange Act of 1934.

7. Mitchell Hutchins will provide general management and administrative services to the Trust, and, subject to review and approval by the Board, will: (a) Set the Portfolios' overall investment strategies; (b) evaluate, select and recommend Sub-Advisers to manage all or a part of the Portfolio's assets; (c) allocate and, when appropriate, reallocate the Portfolios' assets among Sub-Advisers; (d) monitor and evaluate the investment performance of Sub-Advisers; and (e) implement procedures reasonably designed to ensure that the Sub-Advisers comply with the relevant Portfolio's investment objectives, policies and restrictions.

8. No Trustee or officer of the Trust or director or office of Mitchell Hutchins will own directly or indirectly (other than through a polled investment vehicle that is not controlled by any such Trustee, director or officer) any interest in a Sub-Adviser except for: (a) Ownership of interest in Mitchell Hutchins or in any entity that controls, is controlled by, or is under common control with Mitchell Hutchins; or (b) ownership of less than 1% of the outstanding securities of any class of

equity or debt of a publicly traded company that is either a Sub-Adviser or an entity that controls, is controlled by, or is under common control with a Sub-Adviser.

For the Commission, by the Division of Investment Management, pursuant to delegated authority.

Margaret H. McFarland,

Deputy Secretary.

[FR Doc. 01–1405 Filed 1–17–01; 8:45 am]

BILLING CODE 8010–01–M

SECURITIES AND EXCHANGE COMMISSION

[Investment Company Act Release No. 24825; 812–12352]

CityFed Financial Corp.; Notice of Application

January 11, 2001.

AGENCY: Securities and Exchange Commission (''SEC'' or ''Commission'').

ACTION: Notice of application for an order under sections 6(c) and 6(e) of the Investment Company Act of 1940 (''Act'') for exemption from all provisions of the Act, except sections 9, 17(a) (modified as discussed in the application), 17(d) (modified as discussed in the application), 17(e), 17(f), 36 through 45, and 47 through 51 of the Act and the rules thereunder.

SUMMARY OF APPLICATION: The requested order would exempt the applicant, CityFed Financial Corp. (''CityFed''), from certain provisions of the Act until the earlier of one year from the date the requested order is issued or such time as CityFed would no longer be required to register as an investment company under the Act. The order would extend an exemption granted until February 9, 2001.[1]

FILING DATES: The application was filed on December 4, 2000 and amended on January 10, 2001.

HEARING OR NOTIFICATION OF HEARING: An order granting the application will be issued unless the SEC orders a hearing. Interested persons may request a hearing by writing to the SEC's Secretary and serving applicant with a copy of the request, personally or by mail. Hearing requests should be received by the SEC by 5:30 p.m. on February 5, 2001, and should be accompanied by proof of service on applicant, in the form of an affidavit or, for lawyers, a certificate of service. Hearing requests should state the nature of the writer's interest, the reason for the request, and the issues contested. Persons who wish to be notified of a hearing may request notification by writing to the SEC's Secretary.

ADDRESSES: Secretary, SEC, 450 Fifth Street, NW., Washington, DC 20549–0609. CityFed, 4 Young's Way, P.O. Box 3126, Nantucket, MA 02584.

FOR FURTHER INFORMATION CONTACT: Bruce R. MacNeil, Senior Counsel, at (202) 942–0634, or Mary Kay Frech, Branch Chief, at (202) 942–0564 (Division of Investment Management, Office of Investment Company Regulation).

SUPPLEMENTARY INFORMATION: The following is a summary of the application. The complete application may be obtained for a fee at the SEC's Public Reference Branch, 450 Fifth Street, NW., Washington, DC 20549–0102 (tel. no. 202–942–8090).

Applicant's Representations

1. CityFed was a savings and loan holding company that conducted its savings and loan operations through its wholly-owned subsidiary, City Federal Savings Bank (''City Federal''). During the five-year period ending December 31, 1988, City Federal was the source of substantially all of CityFed's revenues and income. As a result of substantial losses in its mortgage banking and real estate operations, City Federal was unable to meet its regulatory capital requirements. Accordingly, on December 7, 1989, the Office of Thrift Supervision (''OTS'') placed City Federal into receivership and appointed the Resolution Trust Corporation (''RTC'') as City Federal's receiver. City Federal's deposits and substantially all of its assets and liabilities were acquired by a newly created federal mutual savings bank, City Savings, F.S.B. (''City Savings''). The OTS appointed the RTC as receiver of City Savings.

2. Once City Federal was placed into receivership, CityFed no longer conducted savings and loan operations through any subsidiary. Thus, since December 8, 1989, almost all of CityFed's assets consisted of cash that has been invested in (i) money market instruments with a maturity of one year or less, and (ii) money market mutual funds.

3. On June 2, 1994, the OTS issued a Notice of Charges (''OTS Action'') against CityFed and certain current or former directors and, in some cases, officers of CityFed and City Federal (''Individual Respondents''). The OTS Action sought restitution from and a civil money penalty against both CityFed and the Individual Respondents. Also on June 2, 1994, the OTS issued a Temporary Order to Cease and Desist (''Temporary Order'') against CityFed. The Temporary Order sought to freeze CityFed's assets by placing them in various respects under the controls of the OTS. On October 26, 1994, CityFed and the OTS entered into an escrow agreement with CoreStates Bank, N.A. (now First Union National Bank (''First Union'')) (''Escrow Agreement'') pursuant to which CityFed transferred substantially all of its assets to First Union for deposit into an escrow account. The Escrow Agreement provided CityFed with $15,000 per month for operating expenses and allowed CityFed to sell and purchase securities in the escrow account.

4. On May 19, 2000, CityFed finalized with the OTS and the Federal Deposit Insurance Corporation (''FDIC''), the statutory successor to the RTC, a settlement of the OTS Action (''Settlement''). Pursuant to the Settlement, the OTS dismissed with prejudice the OTS Action and the FDIC gave full and complete releases to CityFed and the Individual Respondents. In turn, CityFed and the Individual Respondents gave full and complete releases to the OTS and the FDIC. The OTS also dissolved the Temporary Order and authorized First Union to release to CityFed all of its assets remaining in the escrow account.

5. On December 7, 1992, the RTC filed suit against CityFed and two former officers of City Federal seeking damages of $12 million for failure to maintain the net worth of City Federal (''First RTC Action''). In light of the filing of the OTS Action on June 2, 1994, the RTC and CityFed agreed to dismiss without prejudice the RTC's claim against CityFed in the First RTC Action. Pursuant to the Settlement, the FDIC released CityFed from all claims in the First RTC Action.

6. The RTC also filed suit against several former directors and officers of City Federal alleging gross negligence and breach of fiduciary duty with respect tot certain loans (''Second RTC Action''). The RTC sought in excess of $200 million in damages. CityFed states that all of the defendants in the Second RTC Action have settled with the RTC or the FDIC. Pursuant to the Settlement, the FDIC assigned any rights it acquired in these settlements to CityFed. Under its bylaws, CityFed may be obligated to indemnify these former officers and directors and pay their legal expenses, including settlement amounts. On the advice of counsel to a special committee of CityFed's board of directors, comprised of directors who have not been named in the First or Second RTC Action, CityFed advanced reasonable

[1] CityFed Financial Corp., Investment Company Act Release Nos. 24252 (Jan. 13, 2000) (notice) and 24283 (Feb. 9, 2000) (order).

defense costs to the former directors and officers named in the Actions. CityFed is unable to determine with any accuracy the extent of its liability with respect to these indemnification claims, although the amount may be material.

7. On August 7, 1995, CityFed, acting in its own right and as shareholder of City Federal, filed a civil action in the United States Court of Federal Claims seeking damages for loss of ''supervisory goodwill'' on its books as a result of various acquisitions by City Federal of troubled depository institutions. Pursuant to the Settlement, CityFed assigned to the FDIC all of CityFed's interest in its supervisory goodwill action, ceased to be a party to the case, and has no right to share in the recovery in that case, should there be one.

8. CityFed is subject to a number of loss contingencies for which it is currently unable to assess reasonably the probability or range of loss. CityFed intends to resolve all claims against it at the minimum cost possible. While CityFed's board of directors has considered from time to time whether to engage in an operating business, CityFed states that it cannot resume an operating business at the present time because the amount required to resolve its currently outstanding claims cannot be reasonably estimated and could exceed CityFed's assets. Following the Settlement, CityFed may undergo reorganization, perhaps involving a bankruptcy proceeding. It is anticipated that CityFed's outstanding claims, including its indemnification claims, will be addressed prior to, or as part of, any reorganization.

9. CityFed states that at present there is no public market for its stock and that it is traded sporadically in the over-the-counter market. Since City Federal's receivership, the operating expenses of CityFed have consisted of the employees' salaries, office expenses, and accounting and legal expenses. CityFed currently has one full-time employee and one office. As of September 30, 2000, CityFed held cash and securities of approximately $6.4 million.

Applicant's Legal Analysis

1. Section 3(a)(1)(A) defines an investment company as any issuer ''is or holds itself out as being engaged primarily * * * in the business of investing, reinvesting or trading in securities.'' Section 3(a)(1)(C) further defines an investment company as an issuer who is engaged in the business of investing in securities that have a value in excess of 40% of the issuer's total assets (excluding government securities and cash).

2. Section 6(c) of the Act provides that the SEC may exempt any person from any provision of the Act ''if and to the extent that such exemption is necessary or appropriate in the public interest.'' Section 6(e) provides that in connection with any SEC order exempting an investment company from any provision of section 7, certain specified provisions of the Act shall be applicable to such company, and to other persons in their transactions and relations with such company, as through such company were registered under the Act, if the SEC deems it necessary or appropriate in the public interest or for the protection of investors.

3. CityFed acknowledges that it may be deemed to fall within one of the Act's definitions of an investment company. Accordingly, CityFed requests an exemption under sections 6(c) and 6(e) from all provisions of the Act, subject to certain exceptions described below. CityFed requests an exemption until the earlier of one year from the date of the requested order or such time as it would no longer be required to register as an investment company under the Act.

4. In determining whether to grant an exemption for a transient investment company, the SEC considers such factors as whether the failure of the company to become primarily engaged in a non-investment business or excepted business or liquidate within one year was due to factors beyond its control; whether the company's officers and employees during that period tried, in good faith, to effect the company's investment of its assets in a non-investment business or excepted business or to cause the liquidation of the company; and whether the company invested in securities solely to preserve the value of its assets. CityFed believes that it meets these criteria.

5. CityFed believes that its failure to become primarily engaged in a non-investment business by February 9, 2001, is due to factors beyond its control. CityFed asserts that the amount required to resolve its currently outstanding claims cannot be reasonably estimated and could exceed its assets. If CityFed is unable to resolve these claims successfully, it states that it may seek protection from the bankruptcy courts or liquidate. CityFed also asserts that it probably will not be in a position to determine what course of action to pursue until most, if not all, of its contingent liabilities are resolved. Additionally, CityFed states that its circumstances are unlikely to change over the requested one-year period in light of the number of claims currently pending against it. Since the filing of its initial application for exemptive relief under sections 6(c) and 6(e) on October 19, 1990, CityFed has invested in money market instruments and money market mutual funds solely to preserve the value of its assets.

6. During the term of the proposed exemption, CityFed states that it will comply with sections 9, 17(a) and (d) (subject to the modifications described in condition 4, below), 17(e), 17(f), 36 through 45, and 47 through 51 of the Act and the rules thereunder.

Applicant's Conditions

CityFed agrees that the requested order will be subject to the following conditions:

1. CityFed will not purchase or otherwise acquire any securities other than short-term U.S. government securities, certificates of deposit, commercial paper rated A–1/P–1, and shares of registered money market funds; except that CityFed may acquire equity securities of an issuer that is not an investment company as defined in section 3(a) of the 1940 Act or is relying on an exclusion from the definition of investment company under section 3(c) of the 1940 Act other than section 3(c)(1) or 3(c)(7), in connection with the acquisition of an operating business as evidenced by a resolution approved by CityFed's board of directors.

2. CityFed will not hold itself out as being engaged in the business of investing, reinvesting, owning, holding, or trading in securities.

3. CityFed's Form 10–KSB, Form 10–QSB and annual reports to shareholders will state that an exemptive order has been granted pursuant to sections 6(c) and 6(e) of the Act and that CityFed and other persons, in their transactions and relations with CityFed, are subject to sections 9, 17(a), 17(d), 17(e), 17(f), 36 through 45, and 47 through 51 of the Act, and the rules thereunder, as if CityFed were a registered investment company, except as permitted by the order requested hereby.

4. Notwithstanding sections 17(a) and 17(d) of the Act, an affiliated person (as defined in section 2(a)(3) of the Act) of CityFed may engage in a transaction that otherwise would be prohibited by these sections with CityFed:

a. If such proposed transaction is first approved by a bankruptcy court on the basis that (i) The terms thereof, including the consideration to be paid or received, are reasonable and fair to CityFed, and (ii) the participation of CityFed in the proposed transaction will not be on a basis less advantageous to CityFed than that of other participants; and

b. In connection with each such transaction, CityFed shall inform the

bankruptcy court of (i) the identity of all of its affiliated persons who are parties to, or have a direct or indirect financial interest in, the transaction; (ii) the nature of the affiliation; and (iii) the financial interests of such persons in the transaction.

For the Commission, by the Division of Investment Management, under delegated authority.

Margaret H. McFarland,

Deputy Secretary.

[FR Doc. 01–1484 Filed 1–17–01; 8:45 am]

BILLING CODE 8010–01–M

SECURITIES AND EXCHANGE COMMISSION

[Release No. 34–43827; File No. SR–CBOE–00–60]

Self-Regulatory Organizations; Notice of Filing of Proposed Rule Change by the Chicago Board Options Exchange, Inc. To Change Its Membership Application Posting Process and Clarify Its Membership Rules

January 9, 2001.

Pursuant to Section 19(b)(1) of the Securities Exchange Act of 1934 (''Act'')[1] and Rule 19b–4 thereunder,[2] notice is hereby given that on November 22, 2000, the Chicago Board Options Exchange, Inc. (''CBOE'' or ''Exchange'') filed with the Securities and Exchange Commission (''Commission'') the proposed rule change as described in Items I, II, and III below, which Items have been prepared by the Exchange. The Commission is publishing this notice to solicit comments on the proposed rule change from interested persons.

I. Self-Regulatory Organization's Statement of the Terms of Substance of the Proposed Rule Change

The CBOE proposes to change its membership application posting process and to make some clarifying revisions to its membership rules.

Below is the text of the proposed rule change. Proposed new language is italicized and proposed deletions are in brackets.

Chicago Board Options Exchange, Incorporated—Rules

* * * * *

Chapter III—Membership

* * * * *

Application Procedures and Approval or Disapproval

Rule 3.9.

(a)–(d) Unchanged.

(e) Within a reasonable time following receipt of an application for membership *from an applicant that has not been a member within 6 months prior to the date of receipt of the application by the Membership Department*[, an application to change membership capacity statutes set forth in Rule 3.2(b) or 3.3(b),] or an application to change Clearing Members, the name of the applicant and the application request shall be published in the Exchange Bulletin and posted on the Exchange Bulletin Board. The Membership Committee shall determine for each type of the foregoing applications the required time period that the above information must be posted on the Exchange Bulletin Board, provided that in no event shall any such required posting period be less than 10 days. Notwithstanding the foregoing, the required posting period for a member's application to change Clearing Members shall be waived if the Clearing Member(s) that will no longer be guaranteeing the member's Exchange transactions consent to such waiver in a form and manner prescribed by the Exchange. The Membership Committee may also determine to implement a posting period requirement for other types of applications submitted pursuant to paragraph (a) of this Rule. The Membership Committee may shorten or waive a required posting period for an applicant if the Membership Committee determines that doing so is warranted due to extenuating circumstances.

(f) The Membership Department shall investigate each applicant applying to be a member organization, each associated person required to be approved by the Membership Committee pursuant to Rule 3.6(b), and each applicant applying to be an individual member (with the exception of *any associated person applicant that is a current member*, any [individual] member applicant *that* [who] was *a* [an individual] member within 6 months prior to the date of receipt of that applicant's membership application by the Membership Department, *and any member or associated person applicant that was investigated by the Membership Department within 6 months prior to the date of receipt of that applicant's application by the Membership Department*). The Membership Department may [also] investigate *any applicant that is not required to be investigated pursuant to this paragraph (f) and* any other person or organization that submits an application pursuant to paragraph (a) of this Rule.

(g) Unchanged.

(h) The Membership Committee may approve an application submitted pursuant to paragraph (a) of this Rule only if any applicable posting period requirement pursuant to paragraph (e) of this Rule has been satisfied, any investigation pursuant to paragraph (f) of this Rule has been completed, and any applicable orientation and exam requirements pursuant to paragraph (g) of this Rule have been satisfied.

* * * Interpretations and Policies:

.01–.02 Unchanged.

* * * * *

Purchase of Membership

Rule 3.13.

(a)–(b) Unchanged.

(c) Payment. Not later than the second business day following the acceptance of a bid pursuant to paragraph (a) of this Rule or the matching of a bid and offer pursuant to paragraph (b) of this Rule, the purchaser shall deliver to the Membership Department a certified or cashier's check *in the amount of the purchase price* made payable to the Exchange [covering the purchase price of the membership] *or complete a wire transfer in the amount of the purchase price to an Exchange account designated the Exchange.*

Sale and Transfer of Membership

Rule 3.14.

(a)–(b) Unchanged.

(c) Transfer by Owner. The owner of a transferable membership may transfer the membership without adhering to the provisions contained in Rule 3.13(b) and paragraph (a) of this Rule so long as one of the following qualifying circumstances is applicable to and descriptive of the desired transfer and the transferee is approved to be an owner or lessor:

(i) The owner of a transferable membership (whether or not the membership is registered for a member organization) requests the transfer of the membership to the member's spouse, brother, sister, parent, child, grandparent, or grandchild;

(ii) The owner of a transferable membership requests the transfer of the membership to an organization which has succeeded, through statutory merger, exchange of stock, or acquisition of assets to the business of the transferor;

(iii) The owner of a transferable membership requests the transfer of the

---

[1] 15 U.S.C. 78s(b)(1).

[2] 17 CFR 240.19b–4.

membership to an organization in which the transferor will maintain an interest at least equal in value to the current market price of the membership; or

(iv) The owner of a transferable membership requests the transfer of such membership to an individual or organization which is a partner or shareholder *with a 50% or greater interest in* [of] the transferor as part or all of a [liquidation] distribution of the transferor.

(d)(i)–(d)(vii) Unchanged.

(viii) The grant of an Authorization to Sell a membership shall include the grant of a security interest (*A*) in any proceeds from the sale of the membership that the grantee of the Authorization to Sell is entitled to receive pursuant to Rule 3.15(v)[,] and *(B) in the membership to the extent necessary to establish the priority of the preceding security interest in such proceeds. A* [a] properly executed Authorization to Sell form that has been filed with the Membership Department shall constitute a security agreement which grants the foregoing security interest to the grantee of the Authorization to Sell. The grantee of an Authorization to Sell may act to perfect the foregoing security interest under applicable law, which may include the filing of one or more UCC–1 Financing Statements. However, failure by a grantee of an Authorization to Sell to perfect the foregoing security interest under applicable law shall not affect the rights of the grantee under the Rules. In the event of a cancellation of an Authorization to Sell pursuant to paragraph (d)(iv) of this Rule, the grantee of the Authorization to Sell shall promptly file a Termination Statement with every filing authority where UCC–1 Financing Statement were filed with respect to the Authorization to Sell. The grantee of an Authorization to Sell shall promptly file with the Membership Department a file-stamped copy of any UCC filings made with respect to the Authorization to Sell.

* * * * *

Member Death Benefit

Rule 3.24

(a) Unchanged.

(b) The following individuals shall be eligible for the Member Death Benefit:

(i) any individual who is an active member at the time of his or her death; and

(ii) any individual who (i) was an active member within 90 days prior to the date of his or her death and (ii) was an active member during at least 274 out of 365 days preceding the date of his or her last termination from active member status.

(c) For the purposes of this Rule, the term ''active member'' shall mean any *individual member* [natural person] who is a nominee of a member organization, a Chicago Board of Trade exerciser, a lessee of an Exchange membership, or an owner of an Exchange membership that is not being leased to a lessee.

(d)–(e) Unchanged.

* * * * *

II. Self-Regulatory Organization's Statement of the Purpose of, and Statutory Basis for, the Proposed Rule Change

In its filing with the Commission, the Exchange included statements concerning the purpose of and basis for the proposed rule change and discussed any comments it received on the proposed rule change. The text of these statements may be examined at the places specified in Item IV below. The Exchange has prepared summaries, set forth in Sections A, B, and C below, of the most significant aspects of such statements.

A. Self-Regulatory Organization's Statement of the Purpose of, and Statutory Basis for, the Proposed Rule Change

1. Purpose

The purpose of this proposed rule change is to change the Exchange's membership application posting process and to make some clarifying revisions to the Exchange's membership rules.

CBOE Rule 3.9(e) requires that a posting be included in the Exchange Bulletin and on the Exchange Bulletin Board with respect to any application for membership, any application from a current member to change membership capacity statuses, and any application to change Clearing Members (unless the posting is waived under certain specified circumstances in accordance with the provisions of the Rule). CBOE Rule 3.9(e) also provides that the posting period on the Exchange Bulletin Board be no less than ten days, and that the Exchange's Membership Committee shall determine the required posting period for each of these types of applications in conformity with this minimum time period. The posting period for each of these application categories is fourteen days. The posting is required to set forth the name of the applicant and the application request, and its purpose is to provide members with an opportunity to submit information concerning an applicant that may bear on the applicant's qualifications and fitness for membership under the Exchange's rules. Under CBOE Rule 3.9(h), an application may not be approved, among other things, until any applicable posting requirement has been satisfied.

There are two related factors that have caused the Exchange to propose changing its membership application posting process. First, the Exchange receives no submissions from members in response to the postings for the vast majority of applicants that are posted to the membership on the Exchange's Bulletin Board as part of the posting process. Second, the Exchange has a less extensive and shorter application process for current members that are applying to change membership capacity statutes and for member applicants that have been a member within the prior six months. In most cases, the Exchange is able to process these applications well before the expiration of the posting period. According, the vast majority of these applicants are required to wait for a period of time following the completion of the processing of their applications for their new membership capacities to become effective. This results in inefficiency in the conduct of business on the Exchange as well as inconvenience to these applicants.

As a result, the Exchange is proposing to change its membership application posting process in a manner that seeks to eliminate this inefficiency and inconvenience while at the same time preserving the ability of members to submit information concerning the qualifications and fitness for membership of applicants. Specifically, the Exchange is proposing to amend CBOE Rule 3.9(e) to eliminate the requirement that there be a posting period for current members that are applying to change membership capacity statuses and for member applicants that have been a member within the prior six months. Additionally, the Exchange intends to notify its membership via circular that the Membership Department will accept submissions concerning any current or former member at any time (in contrast to the current limited formal submission period during the posting period) and that these submissions will be retained in the member's membership file.[3] Subsequently, if a current or former member submits any membership

[3] The CBOE indicated that the circular will be detailed and widely disseminated. The circular will be attached to the back of the CBOE rule book and made readily available to the public. Telephone conversation between Arthur Reinstein, Associate General Counsel, CBOE, and Sapna C. Patel, Attorney, Division of Market Regulation, Commission (Jan. 5, 2001).

application and there is a submission for that current or former member in the membership file at the time of submission of the application, the submission concerning that current or former member will be reviewed and considered in the same manner that occurs under the posting process.

The Exchange is proposing to retain the posting period requirement for new membership applicants (*i.e.*, those membership applicants that have never been a member or that have not been a member within the prior six months). The posting period generally does not result in a delay in processing these applications because they are subject to a more extensive and longer application process that takes in excess of fourteen days (during which there is adequate time to complete a fourteen day posting). In addition, the Exchange is proposing to retain the posting period for an application to change Clearing Members (which in the vast majority of cases is waived pursuant to the current provision of CBOE Rule 3.9(e), which provides for the waiver of this posting period if the Clearing Member(s) that will no longer be guaranteeing the member's Exchange transactions consents to such a waiver).

The Exchange is also proposing to make the following clarifying changes to its membership rules:

First, the Exchange is proposing to revise CBOE Rule 3.9(f) to clarify those categories of membership applicants for which the Exchange does not conduct a background investigation due to the fact that the applicant is a current member, the applicant was recently a member, or the Exchange recently conducted a background investigation concerning the applicant. Specifically, CBOE is proposing to revise Rule 3.9(f) to clarify that the Membership Department is not required under CBOE Rule 3.9(f) to investigate the following categories of applicants: (i) Any associated person applicant that is a current member, (ii) any member applicant that was a member within six months prior to the date of receipt of that applicant's membership application by the Membership Department, and (iii) any member or associated person applicant that was investigated by the Membership Department within six months prior to the date of receipt of that applicant's application by the Membership Department. In addition, CBOE is proposing to revise Rule 3.9(f) to clarify that the Membership Department retains the discretion to investigate any applicant that is not required to be investigated under CBOE Rule 3.9(f) if the Membership Department determines that a background investigation is warranted under the circumstances.

Second, CBOE is proposing to revise Rule 3.13(c) to clarify that the Exchange will accept payment for the purchase of a membership by a certified or cashier's check or via a wire transfer.

Third, the Exchange is proposing to clarify the provisions of CBOE Rule 3.14(c)(iv). CBOE Rule 3.14(c)(iv) sets forth one of the four circumstances pursuant to which a membership may be transferred without going through the normal auction process for the purchase and sale of Exchange memberships. Specifically, CBOE Rule 3.14(c)(iv) provides that the owner of a transferable membership may request the transfer of the membership to an individual or organization which is a partner or shareholder of the transferor as part or all of a distribution of the transferor. Under CBOE Rule 3.3.01, the transferee could also be a limited liability company member if the transferor were a limited liability company. CBOE is proposing to clarify Rule 3.14(c)(iv) in two respects. First, CBOE is proposing to revise Rule 3.14(c)(iv) to clarify that the transferee must have at least a fifty percent interest in the transferor. Without this provision, a person could avoid the normal membership auction process by becoming a nominal partner or shareholder in a member organization and then having the member organization transfer the membership to that partner or shareholder. Second, CBOE is proposing to revise Rule 3.14(c)(iv) to delete the word ''liquidation'' due to the fact that it results in confusion as to what constitutes a liquidation distribution and what constitutes a non-liquidation distribution (given that an entity can have partial liquidation in which it does not distribute all of its assets and continues in operation following the partial liquidation). Because the Exchange has interpreted Rule 3.14(c)(iv) to permit membership transfers in connection with partial liquidation distributions, and because the Exchange believes there is no meaningful distinction in this context between a partial liquidation distribution and a regular distribution, the Exchange is proposing to delete the word ''liquidation'' to make it easier for members to understand CBOE Rule 3.14(c)(iv).

Fourth, the Exchange is proposing to clarify the nature of the security interest received by the grantee of an Authorization to Sell under CBOE Rule 3.14(d)(viii). CBOE Rule 3.14(d) provides an owner of a transferable membership the ability to voluntarily grant to another member an Authorization to Sell the membership. The grantee of an Authorization to Sell is vested with all of the authority provided for under the Exchange's Constitution and Rules relating to the sale of the membership. The grantee of an Authorization to Sell also has the right on the sale of the membership to submit claims against the grantor pursuant to CBOE Rule 3.15(b), to be satisfied out of the proceeds of the sale of the membership, that are related to the grantor's Exchange business activities. CBOE Rule 3.14(d)(viii) provides that the grant of an Authorization to Sell a membership includes the grant of a security interest in any proceeds from the sale of the membership that the grantee of the Authorization to Sell is entitled to receive under CBOE Rule 3.15(b). The exchange is proposing to revise CBOE Rule 3.14(d)(viii) to clarify that the grant of an Authorization to Sell also includes the grant of a security interest in the membership itself to the extent necessary to establish the priority of the security interest in the membership sale proceeds the grantee is entitled to receive under CBOE Rule 3.15(b). The Exchange has interpreted CBOE Rule 3.14(d)(viii) to provide for such a security interest in the membership itself and believes that the grant of such a security interest is fairly and reasonably implied from the existing language of CBOE Rule 3.14(d)(viii). The Exchange is simply proposing to revise CBOE Rule 3.14(d)(viii) to make the language of CBOE Rule 3.14(d)(viii) more explicit in this regard.

Finally, the Exchange is proposing to revise CBOE Rule 3.24, the Exchange's Member Death Benefit Rule, to make clear that the term ''active member'' under that Rule only includes individual members and is not intended to include associated persons who are not individual members pursuant to the Exchange's Rules. Specifically, the definition of the term ''active member'' in CBOE Rule 3.24(c) would be revised to replace the words ''natural person'' in that definition with the words ''individual member.'' The remainder of the definition of ''active member'' in CBOE Rule 3.24(c) would not be revised. Thus, as revised, the definition of ''active member'' contained in CBOE Rule 3.24(c) would state that the term ''active member'' shall mean any individual member who is a nominee of a member organization, a Chicago Board of Trade exerciser, a lessee of an Exchange membership, or an owner of an Exchange membership that is not being leased to a lessee. CBOE Rule 3.24(b) provides that the following

individuals are eligible for the member Death Benefit: (i) Any individual who is an active member at the time of his or her death; and (ii) any individual who (a) was an active member within ninety days prior to the date of his or her death, and (b) was an active member during at least 274 out of the 365 days preceding the date of his or her termination from active member status.

2. Statutory Basis

The Exchange believes the proposed rule change is consistent with Section 6(b) of the Act[4] in general, and in particular, with Section 6(b)(5) of the Act,[5] in that it is designed to remove impediments to and perfect the mechanism of a free and open market and to protect investors and the public interest. The proposed rule change seeks to revise the Exchange's membership application posting process in a manner that will reduce inefficiency in the conduct of business on the Exchange and inconvenience to membership applicants while preserving the ability of members to submit information concerning the qualifications and fitness for membership of membership applicants. The proposed rule change will also clarify certain provisions of the Exchange's membership rules making it easier for members to understand those rules.

B. Self-Regulatory Organization's Statement on Burden Competition

The Exchange does not believe that the proposed rule change will impose any burden on competition not necessary or appropriate in furtherance of the purposes of the Act.

C. Self-Regulatory Organization's Statement on Comments on the Proposed Rule Change Received From Members, Participants or Others

The Exchange has neither solicited nor received written comments on the proposed rule change.

III. Date of Effectiveness of the Proposed Rule Change and Timing for Commission Action

Within 35 days of the date of publication of this notice in the **Federal Register** or within such longer period (i) as the Commission may designate up to 90 days of such date if it finds such longer period to be appropriate and publishes its reasons for so finding or (ii) as to which the Exchange consents, the Commission will:

(A) By order approve such proposed rule change, or

(B) Institute proceedings to determine whether the proposed rule change should be disapproved.

IV. Solicitation of Comments

Interested persons are invited to submit written data, views and arguments concerning the foregoing, including whether the proposed rule change is consistent with the Act. Persons making written submissions should file six copies thereof with the Secretary, Securities and Exchange Commission, 450 Fifth Street, NW., Washington, DC 20549–0609. Copies of the submission, all subsequent amendments, all written statement with respect to the proposed rule change that are filed with the Commission, and all written communications relating to the proposed rule change between the Commission and any person, other than those that may be withheld from the public in accordance with the provisions of 5 U.S.C. 552, will be available for inspection and copying in the Commission's Public Reference Room. Copies of such filing will also be available for inspection and copying at the principal office of the CBOE. All submissions should refer to File No. SR–CBOE–00–60 and should be submitted by February 8, 2001.

For the Commission by the Division of Market Regulation, pursuant to delegated authority.[6]

Margaret H. McFarland,

Deputy Secretary.

[FR Doc. 01–1407 Filed 1–17–01; 8:45 am]

BILLING CODE 8010–01–M

[4] 15 U.S.C. 78f(b).

[5] 15 U.S.C. 78f(b)(5).

[6] 17 CFR 200.30–3(a)(12).

SECURITIES AND EXCHANGE COMMISSION

[Releae No. 34–43829; File No. SR–CBOE–00–10]

Self-Regulatory Organizations; Order Granting Approval of Proposed Rule Change by the Chicago Board Options Exchange, Inc., and Notice of Filing and Order Granting Accelerated Approval of Amendment No. 1, to Permit the Chairman of the Appropriate Floor Procedure Committee to Decrease the Size of Orders Eligible for Entry Into the Retail Automatic Execution System During Unusual Market Conditions

January 10, 2001.

I. Introduction

On March 28, 2000, the Chicago Board Options Exchange, Inc. (''CBOE'' or ''Exchange'') filed with the Securities and Exchange Commission (''Commission'') pursuant to section 19(b)(1) of the Securities Exchange Act of 1934 (''Act'')[1] and Rule 19b–4 thereunder,[2] a proposed rule change that would grant the Chairman of an appropriate Floor Procedure Committee (''FPC''), or his designee, the authority to decrease the size of orders eligible for entry into the Exchange's Retail Automatic Execution System (''RAES'') during unusual market conditions. On January 3, 2001, the Exchange filed Amendment No. 1 to the proposed rule change.[3]

The proposed rule change was published for comment in the **Federal Register** on June 8, 2004.[4] The Commission received no comments on the proposal. This order approves the proposal.

II. Description of Proposal

Currently, the appropriate FPC of the CBOE has the authority to determine the size of orders eligible for entry into RAES up to a maximum of seventy-five contracts.[5] In this proposal, the Exchange is seeking to amend Interpretation .05 to Rule 6.8, *RAES Operations,* to allow the Chairman of the appropriate FPC, or the Chairman's designee,[6] to exercise the authority of the FPC to decrease the size of orders eligible for entry into RAES for option classes during unusual market conditions.[7]

In its filing, the Exchange represented that it is sometimes necessary to temporarily reduce the eligible order size levels for RAES in situations where unusual market conditions exist. However, under the current Exchange rules,a decision to decrease the eligible

[1] 15 U.S.C. 78s(b)(1).

[2] 17 CFR 240.19b–4.

[3] *See* Letter from Angelo Evangelou, Counsel, CBOE, to Jennifer Colihan, Attorney, Division of Market Regulation (''Division''), Commission, dated January 2, 2001. (''Amendment No. 1''). In Amendment No. 1, the Exchange clarified that the Chairman may designate his authority solely to: (1) another member of the FPC, or (2) or (2) two CBOE floor officials.

[4] *See* Securities Exchange Act Release No. 42862 (May 30, 2000), 65 FR 36481.

[5] *See* Exchange Rules 6.8(a)(i) and 6.8(e). The Commission recently approved a proposed rule change by the Exchange to increase the maximum size of RAES-eligible orders to seventy-five contracts. *See* Securities Exchange Act Release No. 43517 (November 3, 2000), 65 FR 69082 (November 15, 2000).

[6] *See* Amendment No. 1, *supra* note 3.

[7] The Exchange has represented that the minimum level to which the Chairman, or his designee, may decrease the size of orders eligible for entry into RAES pursuant to the proposed rule is ten contracts. Telephone conversation between Angelo Evangelou, Counsel, CBOE, and Jennifer Colihan, Attorney, Division, Commission, on September 8, 2000.

order size must be made by the appropriate FPC. The Exchange represented that it is not practicable to provide notice to all the members of the appropriate FPC and convene a meeting during the day to make the decision to decrease eligible order size in the event of an unusual market situation.

Consequently, the Exchange seeks to delegate the authority provided in CBOE Rule 6.8(a)(i) to the Chairman of the appropriate FPC, or to the Chairman's designee, to decrease the eligible order size for RAES in unusual market conditions,[8] provided that the Chairman or his designee believes that the action is warranted and provided that the decision is made for no more than one trading day (as is currently the case for the Chairman increasing the order size eligibility for RAES).[9] To the extent that the conditions continue to exist on the following trading day, the Chairman or his designee must review the situation and make an independent decision to decrease the RAES eligible order size for that subsequent day. Further, any decisions made by the Chairman or his designee to decrease the RAES eligible order size for a particular option class for consecutive days will be reviewed by the FPC at its next regularly scheduled meeting. After reviewing these decisions, the FPC can provide guidance to the Chairman or his designee about the use of this authority if the FPC considers it appropriate.

III. Discussion

After careful review, the Commission finds that the proposed rule change is consistent with the requirements of the Act and the rules and regulations thereunder applicable to a national securities exchange and, in particular, the requirements of section 6(b) of the Act[10] and the rules and regulations thereunder.[11] Section 6(b)(5) of the Act[12] states that the rules of an exchange must be designed to facilitate securities transactions and to remove impediments to and perfect the mechanism of a free and open market. The Commission believes that granting the Chairman of the appropriate FPC, or the Chairman's designee, the discretion to exercise the authority of the Committee to decrease the size of orders for entry into RAES is consistent with these statutory provisions.[13]

The Commission further believes that the requirement that the FPC review any decision made by the Chairman or his designee to decrease the size of orders eligible for entry into RAES for consecutive days will help ensure that the Chairman, or his designee, only uses the discretion in limited circumstances that require that such action be taken to ensure the market's integrity and adequate function. Finally, the Commission notes that because this proposed rule involves changing the parameters of the eligible RAES order size, any action taken pursuant to the proposed rule must be documented in accordance with CBOE Rule 6.8, Interpretation .08.[14]

IV. Amendment No. 1

In Amendment No. 1, the Exchange clarified that the Chairman may designate his authority to decrease the size of orders for entry into RAES during unusual market conditions only to: (1) Another member of the FPC, or (2) two CBOE floor officials.[15] The Commission believes that this limitation will help to ensure that only those persons with sufficient knowledge and judgment will be vested with the authority to make decisions that will affect the manner in which RAES is operated, and consequently the manner in which customer orders are executed. The Commission believes that is would be inappropriate for the Chairman of an FPC to delegate his authority to make decisions regarding how RAES is operated to an unlimited number of persons, with varying degrees of knowledge and aptitude for making such decisions.

The Commission, therefore, finds that Amendment No. 1 is consistent with section 6(b)(5) of the Act,[16] which requires that the rules of an exchange be designed to promote just and equitable principles of trade, to foster cooperation and coordination with persons engaged in relating, clearing, settling, processing information with respect to, and facilitating transactions in securities. The Commission also finds good cause to approve Amendment No. 1 to the proposed rule change prior to the thirtieth day after the date of publication of notice of filing of the amendment in the **Federal Register**. The Commission notes that Amendment No. 1 merely clarifies precisely who is eligible to be the ''Chairman's designee'' for purposes of the proposed interpretation. Accordingly, the Commission believes that there is good cause, consistent with section 6(b)(5) and 19(b) of the Act[17] to approve Amendment No. 1 on an accelerated basis.

V. Solicitation of Comments

Interested persons are invited to submit written data, views and arguments concerning Amendment No. 1, including whether Amendment No. 1 is consistent with the Act. Persons making written submissions should file six copies thereof with the Secretary, Securities and Exchange Commission, 450 Fifth Street, NW., Washington, DC 20549–0609. Copies of the submission, all subsequent amendments, all written statements with respect to the proposed rule change that are filed with the Commission, and all written communications relating to the proposed rule change between the Commission and any person, other than those that may be withheld from the public in accordance with the provisions of 5 U.S.C. 552, will be available for inspection and copying at the Commission's Public Reference Room. Copies of such filing will also be

[8] According to the Exchange, unusual market conditions may include drastic movement in the security underlying an option, or news pending about the issuer of the underlying security. Telephone conversation between Angelo Evangelou, Counsel, CBOE, and Jennifer Colihan, Attorney, Division, Commission, on September 8, 2000.

[9] Under CBOE Rule 6.8, Interpretation .05, the Chairman of the appropriate FPC currently is authorized to increase the order size eligibility for RAES if he believes that the action is in the interest of alleviating a potential backlog of unexecuted orders in situations where a particular class of option is experiencing a large influx of orders, and provided the decision is made for no more than one trading day. That rule, however, does not permit the Chairman to decrease the order size eligibility maximum.

[10] 15 U.S.C. 78f(b).

[11] In approving this rule change, the Commission has considered the proposal's impact on efficiency, competition, and capital formation, consistent with section 3(f) of the Act. 15 U.S.C. 78c(f).

[12] 15 U.S.C. 78f(b)(5).

[13] The Commission notes that approval of this rule change is not dispositive of whether all aspects of the revised Interpretation comply with the terms and conditions of section IV.h.(i)(bb) of the Order Instituting Public Administrative Proceedings Pursuant to Section 19(h)(1) of the Securities Exchange Act of 1934, Making Finding and Imposing Remedial Sanctions (the ''Order''). The parties to the Order, including the Exchange, are required to ''specify the circumstances, if any, under which automated execution systems can be disengaged or operated in any manner other than the normal manner set forth in the exchange's rules and require the documentation of the reasons for each decision to disengage an automated execution system or operate it in any manner other than the normal manner.'' The Order further provides that parties to the Order must submit to the Commission staff draft proposed rule changes that comply with the requirements set forth above no later than six months from the date of the Order. *See* Securities Exchange Act Release No. 43268 (September 11, 2000).

[14] The Commission notes that Interpretation .08 to CBOE rule 6.8 requires the CBOE to document instances in which the Chairman or his designee decrease RAES order size eligibility levels pursuant to this proposal. *See* Securities Exchange Act Release No. 43196 (August 22, 2000), 65 FR 52800 (August 30, 2000) (noticing immediate effectiveness of SR–CBOE–00–38, which implemented Interpretation .08).

[15] *See* Amendment No. 1, *supra* note 3.

[16] 15 U.S.C. 78f(b)(5).

[17] 15 U.S.C. 78f(b)(5) and 78s(b).

available for inspection and copying at the principal office of the Exchange. All submissions should refer to File No. SR–CBOE–00–10 and should be submitted by February 8, 2001.

VI. Conclusion

For all of the aforementioned reasons, the Commission finds that the proposed rule change is consistent with the requirements of the Act and the rules and regulations thereunder applicable to a national securities exchange.

It Is Therefore ordered, pursuant to section 19(b)(2) of the Act,[18] that the proposed rule change (SR–CBOE–00–10), as amended, is approved.

For the Commission, by the Division of Market Regulation, pursuant to delegated authority.[19]

Margaret H. McFarland,

Deputy Secretary.

[FR Doc. 01–1485 Filed 1–17–01; 8:45 am]

BILLING CODE 8010–02–M

[18] 15 U.S.C. 78s(b)(2).

[19] 17 CFR 200.30–3(a)(12).

SECURITIES AND EXCHANGE COMMISSION

[Release No. 43824; File No. SR–EMCC–00–05]

Self-Regulatory Organizations; Emerging Markets Clearing Corporation; Order Approving a Proposed Rule Change Relating to Increasing the Minimum Clearing Fund Requirement for All EMCC Members to $3,000,000 and Establishing Two Tiers of Inter-Dealer Broker Membership Standards

January 9, 2001.

On July 14, 2000, the Emerging Markets Clearing Corporation (''EMCC'') filed with the Securities and Exchange Commission (''Commission'') and on August 16, 2000, and November 1, 2000, amended a proposed rule change (File No. SR–EMCC–00–05) pursuant to section 19(b)(1) of the Securities Exchange Act of 1934 (''Act'').[1] Notice of the proposal was published in the **Federal Register** on December 1, 2000.[2] No comment letters were received. For the reasons discussed below, the Commission is approving the proposed rule change.

I. Description

The purpose of the rule change is to (i) increase the minimum clearing fund requirement for all EMCC members to $3,000,000 from the current required minimum of $1,000,000 and (ii) provide two tiers of IDB membership standards.[3]

With respect to the increased minimum clearing fund requirement, EMCC's risk advisory subgroup reviewed EMCC's two years of operations, including trade files and daily margin calculations. The subcommittee concluded that, generally, members' calculated clearing fund requirements did not go below $3,000,000. Moreover, raising the minimum requirement from $1,000,000 to $3,000,000 is consistent with the clearing fund requirements imposed on IDBs by other clearing corporations,[4] and it addresses the fact that IDB members have a potential clearing fund loss liability that could well exceed the current $1,000,000 clearing fund minimum. Accordingly, EMCC has determined that it would be more appropriate to have a greater amount of IDB funds on hand to cover the potential exposure than to have to request such a deposit if needed due to a loss. Therefore, EMCC has determined that it is appropriate to increase all members', including IDBs', minimum clearing fund requirement to $3,000,000.

The rule change also separates IDBs into two membership categories based on excess net capital or excess financial resources. Those IDBs with excess net capital, or excess financial resources for a broker or dealer regulated by the Securities and Futures Authority Limited, of between $10,000,000 and $20,000,000 will be margined using an ''event factor'' of 1.5 instead of the factor of 1.25 currently used in EMCC's base margining formula. This factor is representative of the volatilities experienced during the last three emerging market events.[5] Those IDBs with excess net capital or excess financial resources of more than $20,000,000 will be margined under the current event factor of 1.25.

EMCC believes that the two-tier membership standard will permit it to better collateralize the risk posed by IDBs with lower levels of capital. EMCC recognizes that the clearing fund is a key mitigant to market risk in the event of member insolvency and feels that margining those IDBs with less than $20,000,000 excess regulatory capital at an event factor of 1.5 should mitigate the risk of their lower capital levels.

The effective date for these approved changes will be thirty days following the date the Commission approves the filing for current members and will be immediately for any applicant who becomes a member after the rule change is approved.

II. Discussion

Section 17A(b)(3)(F) of the Act requires that the rules of a clearing agency be designed to assure the safeguarding of securities and funds which are in the custody or control of the clearing agency for which it is responsible.[6] The Commission believes that the approval of EMCC's rule change is consistent with this Section. The Commission believes it is prudent for EMCC to have a greater amount of IDB funds on hand to cover the potential exposure than to have to request such a deposit if needed and to increase all members', including IDBs', minimum clearing fund requirements to $3,000,000. In addition, the Commission believes that the two-tier membership standard whereby EMCC will margin IDBs with less than $20,000,000 excess regulatory capital at an event factor of 1.5 will permit EMCC to better collateralize the risk posed by IDBs with lower levels of capital.

III. Conclusion

On the basis of the foregoing, the Commission finds that the proposal is consistent with the requirements of the Act and in particular with the requirements of section 17A of the Act and the rules and regulations thereunder.

It is Therefore Ordered, pursuant to section 19(b)(2) of the Act, that the proposed rule change (File No. SR–EMCC–00–05) be and hereby is approved.

For the Commission by the Division of Market Regulation, pursuant to delegated authority.[7]

Margaret H. McFarland,

Deputy Secretary.

[FR Doc. 01–1408 Filed 1–17–01; 8:45 am]

BILLING CODE 8010–01–M

[1] 15 U.S.C. 78s(b)(1).

[2] Securities Exchange Act Release No. 43618 (November 27, 2000), 65 FR 75327.

[3] EMCC's Rules define an IDB as ''a broker-dealer that conducts securities trading which matches buyers and sellers who are banks or dealers, and who is designated as such by the Corporation.''

[4] *See, e.g.*, Government Securities Clearing Corporation Rule 4, Section 2(c).

[5] October, 1997 (Asia), August, 1998 (Russia), and January, 1999 (Brazilian).

[6] 15 U.S.C. 78q–1(b)(3)(F) (1988).

[7] 17 CFR 200.30–3(a)(12).

SECURITIES AND EXCHANGE COMMISSION

[Release No. 34–43830; File No. SR–ISE–00–19]

Self Regulatory Organizations; Notice of Filing of Proposed Rule Change by the International Securities Exchange LLC Adopting an Obvious Error Rule

January 10, 2001.

Pursuant to Section 19(b)(1) of the Securities Exchange Act of 1934 (''Act''),[1] and Rule 19b–4 thereunder,[2] notice is hereby given that on November 20, 2000, the International Securities Exchange LLC (''ISE'' or ''Exchange'') filed with the Securities and Exchange Commission (''Commission'') the proposed rule change as described in Items I, II, and III below which Items have been prepared by the Exchange. The Commission is publishing this notice to solicit comments on the proposed rule change from interested persons.

I. Self-Regulatory Organizations Statement of the Terms of Substance of the Proposed Rule Change

The Exchange is proposing to adopt new ISE Rule 720, which gives the Exchange the authority to bust or adjust trades that result from clearly erroneous orders or quotations. Proposed new language is *italicized*.

* * * * *

Rule 720. Obvious Errors

The Exchange shall either bust a transaction or adjust the execution price of a transaction that results from an Obvious Error as provided in this Rule.

(a) Definition of obvious Error. For purposes of this Rule only, Obvious Error will be deemed to have occurred when:

(1) during regular market conditions (including rotations), the execution price of a transaction is higher or lower than the Theoretical Price for the series by an amount equal to at least two (2) times the maximum bid/ask spread allowed for the option, so long as such amount is 50 cents or more; or

(2) during fast market conditions (i.e., the Exchange has declared a fast market status for the option in question), the execution price of a transaction is higher or lower than the Theoretical Price for the series by an amount equal to at least three (3) times the maximum bid/ask spread allowed for the option, so long as such amount is 50 cents or more.

(b) Definition of Theoretical Price. For purposes of this Rule only, the Theoretical Price of an option is:

(1) if the series is traded on at least one other options exchange, the last bid or offer, just prior to the trade, found on the exchange that has the most liquidity in that option as provided in Supplementary Material .02 below; or

(2) if there are no quotes for comparison purposes,as determined by the Obvious Error Panel.

(c) Adjustments. Where the execution price of a transaction executed as the result of an Obvious Error is adjusted, the adjusted price will be:

(1) the Theoretical Price of the option in the case where the erroneous price is displayed in the market and subsequently executed by quotes or orders that did not exist in the System at the time of the erroneous price was entered; or

(2) the last bid or offer, just prior to the trade, found on the exchange that has the most liquidity in that option as provided in Supplementary Material .03 below in the case where an erroneous price executes against quotes or orders already existing in the System at the time the erroneous price was entered.

(d) Obvious Error Procedure. Designated personnel in the Exchange's market control center (''Market Control'') shall administer the application of this Rule as follows.

(1) Notification. If a market maker on the Exchange believes that it participated in a transaction that was the result of an Obvious Error, it must notify Market Control within five (5) minutes of the execution. If an Electronic Access Member believes an order it executed on the Exchange was the result of an Obvious Error, it must notify Market Control within twenty (20) minutes of the execution. Except as provided below, no relief under this Rule will be provided unless notification is made within the prescribed time periods.

(2) Adjust or Bust. Market Control will determine whether there was an Obvious Error as defined above. If it is determined that an Obvious Error has occurred, Market Control shall take one of the following actions: (i) where each party to the transaction is a market maker on the Exchange, the execution price of the transaction will be adjusted unless both parties agree to bust the trade within ten (10 minutes of being notified by Market Control of the Obvious Error, or[3] (ii) where at least one party to the Obvious Error is not a market maker on the Exchange, the trade will be busted unless both parties agree to adjust the price of the transaction within thirty (30) minutes of being notified by Market Control of the Obvious Error.

(e) Obvious Error Panel.

(1) Composition. An Obvious Error Panel will be comprised of representatives from three (3) Members that are market makers on the Exchange, at least one (1) of which shall be a representative from a Member that is a Competitive Market Maker and not also a Primary market Maker.

(2) *Request for Review. If a party affected by a determination made under this Rule so requests, the Obvious Error Panel will review decisions made by market Control under this Rule, including whether an Obvious Error occurred, whether the correct Theoretical Price was used, and whether an adjustment was made at the correct price. A party may also request that the Obvious Error Panel provide relief under this Rule in cases where the party failed to provide the notification required in paragraph (d)(1), but unusual circumstances must merit special consideration. The Obvious Error Panel shall review the facts and render a decision on the day of the transaction. All determinations by the Obvious Error Panel shall be final.*

Supplementary Material to Rule 720

.01 For purposes of paragraph (a) of this Rule, the maximum bid/ask spread shall be the maximum bid/ask spread allowed under Rule 803(b), unless a wider spread has been allowed by the Exchange for the option because of unusual market conditions, such as high market volatility.

.02 The Theoretical Price will be determined under paragraph (b)(1) above as follows: (i) the bid price from the exchange providing the most volume will be used with respect to an erroneous bid price entered on the Exchange, and (ii) the offer price from the exchange providing the most volume will be used with respect to an erroneous offer price entered on the Exchange.

.03 The price to which a transaction is adjusted under paragraph (c)(2) above will be as follows: (i) the bid price from the exchange providing the most volume for the option will be used with respect to an erroneous offer price entered on the Exchange, and (ii) the offer price from the exchange providing the most volume for the option will be used with

[1] 15 U.S.C. 78s(b)(1).

[2] 17 CFR 240.19b–4.

[3] The ISE corrected a typographical error that appeared in the proposed rule language. Telephone conversation between Katherine Simmons, Vice President and Associate General Counsel, ISE, and Susie Cho, Attorney, Division of Market Regulation, Commission, January 10,2 001.

respect to an erroneous bid price entered on the Exchange. If there are no quotes for comparison purposes, the adjustment price will be determined by the Obvious Error Panel.

.04 When Market Control determines that an Obvious Error has occurred and action is warranted under paragraph (d)(2) above, the identity of the parties to the trade will be disclosed to each other in order to encourage conflict resolution.

.05 Each market maker firm shall designate at least one person that is knowledgeable about options market making on the ISE to be called upon by the Exchange to participate on an Obvious Error Panel. In no case shall an Obvious Error Panel include a person related to a party to the Obvious Error in question. To the extent reasonably possible, the Exchange shall call upon representatives of each market maker to participate on an Obvious Error Panel on an equally frequent basis.

* * * * *

II. Self-Regulatory Organization's Statement of the Purpose of, and Statutory Basis for, the Proposed Rule Change

In its filing with the Commission, the Exchange included statements concerning the purpose of, and basis for, the proposed rule change and discussed any comments it received on the proposed rule change. The text of these statements may be examined at the places specified in Item IV below. The Exchange has prepared summaries, set forth in Sections A, B, and C below, of the most significant aspects of such statements.

A. Self-Regulatory Organization's Statement of the Purpose of, and Statutory Basis for, the Proposed Rule Change

1. Purpose

The Exchange proposes to adopt new ISE Rule 720 that would allow it to either adjust or bust a transaction in circumstances where a member or its customer has made an error and the price of the execution is ''obviously'' not correct.[4] In such situations, the Exchange does not believe it is consistent with just and equitable principles of trade to permit one market participant to receive a wind-fall at the expense of another market participant that made an obvious error. Conversely, the Exchange does not seek to permit market participants to reconsider poor trading decisions. The ISE believes that the proposed rule contains objective standards regarding when a transaction was clearly the result of an ''obvious error,'' under what circumstances a trade will be adjusted or busted, and to what price a trade will be adjusted if adjustment is appropriate under the circumstances.

Under proposed ISE Rule 720, when a member believes that it has participated in a transaction that was the result of an obvious error, it must notify ISE Market Control within a specified time of the execution. The proposed rule requires Exchange market makers, who are continuously monitoring their transactions on the ISE, to notify ISE Market Control within five minutes of an execution. The proposed rule allows Electronic Access Members, which may handle customer orders on multiple exchanges simultaneously and which may need to contact customers for instruction, up to twenty minutes to notify ISE Market Control.

ISE Market Control will determine whether there was an obvious error according to the following objective criteria: (1) An obvious error will be deemed to have occurred during normal market conditions when the execution price of a transaction is higher or lower than the theoretical price[5] for the series by an amount equal to at least two times the maximum bid/ask spread allowed for the option, so long as such amount is 50 cents or more; and (2) an obvious error will be deemed to have occurred during fast market conditions when the execution price of a transaction is higher or lower than the theoretical price for the series by an amount equal to at least three times the maximum bid/ask spread allowed for the option, so long as such amount is 50 cents or more.[6] ISE Market Control is not given any discretion under proposed ISE Rule 720 to take actions with respect to transactions that do not come within the objective obvious error criteria. In situations where the theoretical price is not objectively determinable, a panel of member representatives will be convened to determine the theoretical price.

If it is determined that a transaction is the result of an obvious error, ISE Market Control will take one of the following actions: (1) Where each party to the transaction is an Exchange market maker,[7] the execution price of the transaction will be adjusted unless both parties agree to bust the trade; or (2) where at least one party to the obvious error is not a market maker on the Exchange, the trade will be busted unless both parties agree to adjust the price of the transaction. In the first instance, Exchange market makers, who commonly hedge transactions immediately, have indicated a preference for adjusting the price of a transaction rather than changing their positions. Thus, the default action will be to adjust the price of the execution according to the objective criteria discussed below. In the second instance, where customer limit orders may be involved, the Exchange does not believe it appropriate to adjust the price of a transaction without the consent of the market participants. Accordingly, the default will be to bust the trade unless both sides agree to adjust the price. The default action will be taken unless agreement is reached within ten minutes in the case where both parties are Exchange market makers, and within thirty minutes where at least one party is not an Exchange market maker.

Where an adjustment is made to a transaction price, the adjusted price will be determined by objective criteria. The adjusted price will be equal to the theoretical price of the option in the case where the erroneous price is displayed in the market and subsequently executed by quotes or orders that did not exist in the system at the time the price was entered. For example, if an option had a bid of $5 and offer of $5.20 on the options exchange with the most volume in that option and due to an erroneous quotation, the ISE displayed a bid of $7 that was executed against by an incoming sell order or market maker offer, the adjustment price would be $5, which is the fair price at which a market participant could have sold the option at the time of the transaction. The ISE would presume that, in this situation, the seller knew that the price was

[4] While current ISE Rule 804(d)(2) gives the Exchange some flexibility with respect to customer orders when a market maker's quote is obviously an error, it only states that an obviously erroneous quote may not be ''firm'' for customer orders. ISE Rule 804 does not expressly give the Exchange authority to bust an executed transaction, nor does it contain any guidelines for determining when a quotation is obviously erroneous.

[5] The theoretical price of an option in the case of an erroneous bid (offer) is the last bid (offer), just prior to the trade, found on the exchange that has the most liquidity in that option other than the ISE. If there are no quotes for comparison purposes, the theoretical price will be determined by an obvious error panel.

[6] The reason for requiring a greater deviation from the theoretical price during fast market conditions is that when the price of an underlying is moving rapidly, it is not as ''obvious'' that an option price might be in error.

[7] A party to a transaction will be considered an Exchange market maker under proposed ISE Rule 720 if the resulting position is booked in an ISE market maker account. For example, under ISE Rule 803, a Competitive Market Maker (''CMM'') on the ISE may execute up to 25 percent of its total volume in securities to which it is not appointed. An obvious error involving two CMMs will be adjusted under proposed ISE Rule 720 unless both agree to bust the trade.

obviously erroneous as compared to the price being displayed by the primary options exchange for the option.

Where a participant enters a quotation or order in error that executes against standing interest on the Exchange, the contra side to the transaction had no notice of an erroneous price and took no action to execute at the erroneous price. In this instance, the adjustment price will be the bid (offer) price from the exchange providing the most volume in the case of an erroneous offer (bid) price entered on the Exchange. The ISE believes that this will result in a more favorable adjustment price for the participant with standing interest in the book than the participant that made the error. As a result, in the previous example, if the erroneous bid of $7 executed against an offer in the system at $6.50, the adjustment price would be $5.20 (the offer price) instead of 5 (the bid price). Again, the only time an adjustment will be made to the price of a transaction is in the case where both parties were ISE market makers or where both parties agree to the adjustment.

Finally, proposed ISE Rule 720 specifies that each market maker firm will designate at least one person that is knowledgeable about options market making on the ISE to be called upon by the Exchange to participate on an obvious error panel.[8] Proposed ISE Rule 720 provides that an obvious error panel will have the authority to: (1) Determine a theoretical price when there is no quote for an option on another options exchanges; and (2) upon request by a party to a potential obvious error, review whether the correct theoretical price was used and whether an adjustment was made at the correct price. A party to a potential obvious error may also request that the obvious error panel provide relief under the proposed rule in cases where the party failed to give notice within the required time periods, but there must be unusual circumstances to merit this special consideration. All determinations by an obvious error panel will be made on the same day as the transaction in question and shall be final.

2. Statutory Basis

The Exchange believes that the proposed rule change is consistent with Section 6(b) of the Act[9] in general, and furthers the objectives of Section 6(b)(5)[10] in particular, in that it is designed to prevent fraudulent and manipulative acts and practices, to promote just and equitable principles of trade, to remove impediments to and perfect the mechanism for a free an open market and a national market system, and, in general, to protect investors and the public interest.

B. Self-Regulatory Organization's Statement on Burden on Competition

The Exchange does not believe that the proposed rule change will impose any burden on competition that is not necessary or appropriate in furtherance of the purposes of the Act.

C. Self-Regulatory Organization's Statement on Comments on the Proposed Rule Change Received From Members, Participants, or Others

The Exchange did not solicit or receive written comments on the proposed rule change.

III. Date of Effectiveness of the Proposed Rule Change and Timing for Commission Action

Within 35 days of the date of publication of this notice in the Federal Register or within such longer period (i) as the Commission may designate up to 90 days of such date if it finds such longer period to be appropriate and publishes its reasons for so finding or (ii) as to which the Exchange consents, the commission will:

(A) By order approve such proposed rule change, or

(B) Institute proceedings to determine whether the proposed rule change should be disapproved.

IV. Solicitation of Comments

Interested persons are invited to submit written data, views, and arguments concerning the foregoing, including whether the proposed rule change is consistent with the Act. Persons making written submissions should file six copies thereof with the Secretary, Securities and Exchange Commission, 450 Fifth Street, NW., Washington, DC 20549–0609. Copies of the submission, all subsequent amendments, all written statements with respect to the proposed rule change that are filed with the Commission, and all written communications relating to the proposed rule change between the Commission and any person, other than those that may be withheld from the public in accordance with the provisions of 5 U.S.C. 552, will be available for inspection and copying at the Commission's Public Reference Room. Copies of such filing will also be available for inspection and copying at the principal office of the Exchange. All submissions should refer to File No. SR–ISE–00–19 and should be submitted by February 8, 2001.

For the Commission, by the Division of Market Regulation, pursuant to delegated authority.[1]

Margaret H. McFarland,

Deputy Secretary.

[FR Doc. 01–1409 Filed 1–17–01; 8:45 am]

BILLING CODE 8010–01–M

[8] In no case shall an obvious error panel include a person related to a party to the obvious error in question. To the extent reasonably possible, the Exchange shall call upon representatives of each market maker to participate on an obvious error panel on an equally frequent basis.

[9] 15 U.S.C. 78f(b).

[10] 15 U.S.C. 78f(b)(5).

[1] 17 CFR 200.30–3(a)(12).

SECURITIES AND EXCHANGE COMMISSION

[Release No. 34–43831; File No. JR–NASA–00–72]

Self-Regulatory Organizations; Notice of Filing and Immediate Effectiveness of Proposed Rule Change by the National Association of Securities Dealers, Inc. Relating to Nasdaq's Transaction Credit Pilot Program

January 10, 2001.

Pursuant to Section 19(b)(1) of the Securities Exchange Act of 1934 (''Act''),[1] and Rule 19b–4 thereunder,[2] notice is hereby given that on December 13, 2000, the National Association of Securities Dealers, Inc. (''NASD'' or ''Association''), through its wholly owned subsidiary The Nasdaq Stock Market, Inc. (''NASD''), filed with the Securities and Exchange Commission (''SEC'' or ''Commission'') the proposed rule change as described in Items I, II, and III below, which Items have been prepared by Nasdaq. Nasdaq has designated this proposal as one establishing or changing a due, fee, or other charge imposed by the Association under Section 19(b)(3)(A)(ii) of the Act,[3] which renders the proposal effective upon filing with the Commission. The Commission is publishing this notice to solicit comments on the proposed rule change from interested persons.

I. Self-Regulatory Organization's Statement of the Terms of Substance of the Proposed Rule Change

Nasdaq proposes to amend NASD Rule 7010, System Services, to extend Nasdaq's transaction credit pilot program for an additional three months for Tape A and B reports. The text of the proposed rule change is below. Proposed new language is in italics. Proposed deletions are in brackets.

[1] 15 U.S.C. 78s(b)(1).

[2] 17 CFR 240.19b–4.

[3] 15 U.S.C. 78s(b)(3)(A)(ii).

7010. System Services

(a)–(b) No Change.

(c) * * *

(1) No Change.

(2) Exchange-Listed Securities Transaction Credit. For a pilot period, qualified NASD members that trade securities listed on the NYSE and Amex in over-the-counter transactions reported by the NASD to the Consolidated Tape Association may receive from the NASD transaction credits based on the number of trades so reported. To qualify for the credit with respect to Tape A reports, an NASD member must account for 500 or more average daily Tape A reports of over-the-counter transactions as reported to the Consolidated Tape during the concurrent calendar quarter. To qualify for the credit with respect to Tape B reports, an NASD member must account for 500 or more average daily Tape B reports of over-the-counter transactions as reported to the Consolidated Tape during the concurrent calendar quarter. If an NASD member is so qualified to earn credits based either on its Tape A activity, or its Tape B activity, or both, that member may earn credits from one or both pools maintained by the NASD, each pool representing 40% of the revenue paid by the Consolidated Tape Association to the NASD for each of Tape A and Tape B transactions. A qualified NASD member may earn credits from the pools according to the member's pro rata share of the NASD's over-the-counter trade reports in each of Tape A and Tape B for each calendar quarter starting with July 1, 2000 for Tape A reports (April 1, 2000 for Tape B reports) and ending with the calendar quarter starting on [October 1, 2000] *January 1, 2001.*

* * * * *

II. Self-Regulatory Organization's Statement of the Purpose of, and Statutory Basis for, the Proposed Rule Change

In its filing with the Commission, Nasdaq included statements concerning the purpose of and basis for the proposed rule change and discussed any comments it received on the proposed rule change. The text of these statements may be examined at the places specified in Item IV below. Nasdaq has prepared summaries, set forth in Sections A, B, and C below, of the most significant aspects of such statements.

A. Self-Regulatory Organization's Statement of the Purpose of, and Statutory Basis for, the Proposed Rule Change

1. Purpose

Nasdaq proposes to extend through March 31, 2001, its pilot program to provide a transaction credit[4] to NASD members that exceed certain levels of trading activity in exchange-listed securities. Nasdaq's InterMarket is a quotation, communication, and execution system that allows NASD members to trade stocks listed on the New York Stock Exchange (''NYSE'') and the American Stock Exchange (''Amex''). The InterMarket competes with regional exchanges like the Chicago Stock Exchange (''CHX'') and the Cincinnati Stock Exchange (''CSE'') for retail order flow in stocks listed on the NYSE and the Amex. The NASD collects trade reports from broker-dealers trading these securities in the over-the-counter (''OCTC'') market and provides the trade reports to the Consolidated Tape Association (''CTA'') for inclusion in the Consolidated Tape. As a participant in the CTA Plan, the NASD is entitled to a portion of the revenue that the CTA generates by selling this market data information. NASD's share of the revenues is based on trades that it reports on behalf of these broker-dealers in NYSE-listed securities (''Tape A'') and in Amex-listed securities (''Tape B'').

The Transaction Credit Pilot Program began in 1999.[5] Under the Program, NASD shares a portion of these tape revenues by providing a transaction credit to NASD members who exceed certain levels of OTC trading activity in NYSE and Amex securities. The Program helps InterMarket market makers and investors lower costs associated with trading listed securities. The Program also is an important tool for Nasdaq to compete against other exchanges (particularly CSE and CHX) that offer similar programs[6] and thereby maintain market share in listed securities.

The Program works as follows: Nasdaq calculates two separate pools of revenue from which credits can be earned: one representing 40% of the gross revenues received by the NASD from the CTA for providing trade reports in NYSE-losted securities executed in the InterMarket for dissemination by CTA (Tape A), and the other representing 40% of the gross revenue received from the CTA for reporting Amex trades (Tape B).

Eligibility for transaction credits is based on concurrent quarterly trading activity. For example, an InterMarket participant that enters the market for Tape A or Tape B securities during a particular quarter and prints an average of 500 daily trades of Tape A securities during the time it is in the market, or that averages 500 Tape B prints during such quarter, would be eligible to receive transaction credits based on its trades during the third quarter. Only those NASD members who continue to average an appropriate daily execution level are eligible for transaction credits and thus able to receive a pro-rata portion of the appropriate pool.[7] These thresholds permit the NASD to recover appropriate administrative costs related to NASD members that do not exceed the threshold and to provide an incentive for NASD members to actively trade in these securities.

The current Program will expire on December 31, 2000. Because the Program has helped Nasdaq maintain market share in listed securities, Nasdaq proposes to extend the current Program through the first quarter of 2001. Nasdaq's transaction credit program is being proposed on a pilot basis only. There can be no guarantee that transaction credits will be available to qualifying NASD members beyond the term of the pilot.

2. Statutory Basis

Nasdaq believes the proposed rule change is consistent with section 15A(b)(6) of the Act[8] in the proposal is designed to promote just and equitable principles of trade and to remove impediments to and perfect the mechanism of a national market system and, in general, to protect investors and the public interest. Nasdaq also believes

[4] The transaction credit can be applied to any and all charges imposed by the NASD or its non-self-regulatory organization affiliates. Any remaining balance may be paid directly to the member.

[5] *See* Securities Exchange Act Release No. 41174 (March 16, 1999), 64 FR 14034 (March 23, 1999) (SR–NASD–99–13). The Program was subsequently extended. *See* Securities Exchange Act Release Nos. 42095 (November 3, 1999), 64 FR 61680 (November 12, 1999) (SR–NASD–99–59); 42672 (April 12, 2000), 65 FR 21225 (April 20, 2000)(SR–NASD–00–10); and 42907 (June 7, 2000), 65 FR 37445 (June 14, 2000)(SR–NASD–00–32).

[6] *See* Securities Exchange Act Release No. 38237 (February 4, 1997), 62 FR 6592 (February 12, 1997) (SR–CHX–97–01) and 39395 (December 3, 1997), 62 FR 65113 (December 10, 1997)(SR–CSE–97–12).

[7] As explained in Nasdaq's original pilot filing, the qualification thresholds were selected based on Nasdaq's belief that such numbers represent clear examples of a member's commitment to operating in the InterMarket and competing for order flow. *See* Securities Exchange Act Release No. 41174 (March 16, 1999), 64 FR 14034 (March 23, 1999) (SR–NASD–99–13).

[8] 15 U.S.C. 78o–3(b)(6).

the proposal is consistent with Section 15A(b)(5) of the Act[9] in that it provides for the equitable allocation of reasonable dues, fees and other charges among members and issuers and other persons using any facility of system which the Association operates or controls.

B. Self-Regulatory Organization's Statement on Burden on Competition

Nasdaq does not believe that the proposed rule change will result in any burden on competition that is not necessary or appropriate in furtherance of the purposes of the Act.

C. Self-Regulatory Organization's Statement on Comments on the Proposed Rule Change Received From Members, Participants, or Others

Written comments were neither solicited nor received.

III. Date of Effectiveness of the Proposed Rule Change and Timing for Commission Action

The proposed rule change has become effective pursuant to Section 19(b)(3)(A)(ii) of the Act[10] and subparagraph (f)(2) of Rule 19b–4 thereunder,[11] because it establishes or changes a due, fee, or other charge imposed by the Association. At any time within 60 days of the filing of the proposed rule change, the Commission may summarily abrogate such rule change if it appears to the Commission that such action is necessary or appropriate in the public interest, for the protection of investors, or otherwise in furtherance of the purposes of the Act.

IV. Solicitation of Comments

Interested persons are invited to submit written data, views, and arguments concerning the foregoing, including whether the proposal is consistent with the Act. Persons making written submissions should file six copies thereof with the Secretary, Securities and Exchange Commission, 450 Fifth Street, NW., Washington, DC 20549–0609. Copies of the submission, all subsequent amendments, all written statements with respect to the proposed rule change that are filed with the Commission, and all written communications relating to the proposed rule change between the Commission and any person, other than those that may be withheld from the public in accordance with the provisions of 5 U.S.C. 552, will be available for inspection and copying in the Commission's Public Reference Room. Copies of such filing will also be available for inspection and copying at the principal office of the NASD. All submissions should refer to file number SR–NASD–00–72 and should be submitted by February 8, 2001.

For the Commission, by the Division of Market Regulation, pursuant to delegated authority.[12]

Margaret H. McFarland,

Deputy Secretary.

[FR Doc. 01–1410 Filed 1–17–01; 8:45 am]

BILLING CODE 8010–01–M

[9] 15 U.S.C. 78o–3(b)(5).

[10] 15 U.S.C. 78s(b)(3)(A)(ii).

[11] 17 CFR 240.19b–4(f)(2).

[12] 17 CFR 200.30–3(a)(12).

SECURITIES AND EXCHANGE COMMISSION

[Release No. 34–43822; File No. SR–PHLX–01–01]

Self-Regulatory Organizations; Notice of Filing of Proposed Rule Change by the Philadelphia Stock Exchange, Inc. Relating to the Dissemination of Options Quotations With Size

January 8, 2001.

Pursuant to section 19(b)(1) of the Securities Exchange Act of 1934 (''Act''),[1] and Rule 19b–4 thereunder,[2] notice is hereby given that on January 8, 2001, the Philadelphia Stock Exchange, Inc. (''Phlx'' or ''Exchange'') filed with the Securities and Exchange Commission (''SEC'' or ''Commission'') the proposed rule change as described in Items I, II, and III below, which Items have been prepared by the Phlx. The Commission is publishing this notice to solicit comments on the proposed rule change from interested persons.

I. Self-Regulatory Organization's Statement of the Terms of Substance of the Proposed Rule Change

The Phlx, pursuant to Rule 19b–4 of the Act, proposes to amend, on a temporary basis, Exchange Options Floor Procedure Advice (''OFPA'') F–7, Bids and Offers, to state that the size of any bid or offer in a quotation disseminated by the Exchange shall be equal to the AUTO–X guarantee for the quoted option and shall be firm, except that the disseminated size of bids and offers of customer limit orders shall be ten (10) contracts and shall be firm, regardless of the actual size of such orders.

The complete text of the proposed rule change is available at the Office of the Secretary, Phlx and at the Commission.

II. Self-Regulatory Organization's Statement of the Purpose of, and Statutory Basis for, the Proposed Rule Change

In its filing with the Commission, the Phlx included statements concerning the purpose of and basis for the proposed rule change and discussed any comments it received on the proposed rule change. The text of these statements may be examined at the places specified in Item IV below. The Phlx has prepared summaries, set forth in sections A, B, and C below, of the most significant aspects of such statements.

A. Self-Regulatory Organization's Statement of the Purpose of, and Statutory Basis for, the Proposed Rule Change

1. Purpose

The purpose of the proposed rule change is to codify the Exchange's initial program for the dissemination of options quotations with size. It is anticipated that, on or about January 22, 2001, the Option Price Reporting Authority (''OPRA'') will begin to support the dissemination of options quotations that include the size, or the number of contracts, represented in disseminated bids and offers on the Exchange.

On November 17, 2000, the Commission amended the Quote Rule[3] to require options exchanges and options market makers to publish firm quotes. The amended Quote Rule will require options exchanges to either: (1) Comply with the Quote Rule as it applies in the equity markets and collect from their members and make available to vendors the size associated with each quotation; or (2) establish by rule and periodically publish the quotation size for which their members' quotations are firm. The compliance date for the amendments to the Quote Rule is April 1, 2000.

While it is anticipated that OPRA will have the necessary systems capacity to accept and disseminate quotations with size by late January 2001, and that one or more options exchanges will be in a position to disseminate actual quotation size at that time, the Phlx will not have completed its application of the systems changes necessary to permit it to disseminate actual quotation size for a number of months.

Therefore, until the Exchange's systems disseminate actual quotation size on a quote-by-quote basis, the Phlx seeks herein to establish by rule and

[1] 15 U.S.C. 78s(b)(1).

[2] 17 CFR 240.19b–4.

[3] Exchange Act Rule 11Ac1–1; 17 CFR 240.11Ac1–1; *see* Securities Exchange Act Release No. 43591 (November 17, 2000), 65 FR 75439 (December 1, 2000) (File No. S7–17–00).

periodically publish, on its web site and through regulatory circulars to Exchange members and member organizations, the quotation size for which its members' quotations are firm as required by Rule 11Ac1–1(d)(1)(i) under the Act.[4]

In addition, the Exchange proposes to voluntarily disseminate to OPRA the applicable automatic execution size guarantee for each quoted option, except that with respect to customer limit orders the Phlx would disseminate a size of 10 contracts, regardless of the actual size of the customer order. In all cases, the Phlx would be firm for its disseminated quotation size (without regard to whether the given order would be eligible for automatic execution via the Exchange's automatic execution feature, AUTO–X).[5]

Until the Phlx has completed its application of the systems changes necessary to automatically update its quotation size on a continuous basis, the Phlx believes that the instant proposal represents a vast improvement over the current system, by increasing transparency and providing the market place with considerably more information upon which to base order routing decisions.

Finally, the Phlx expects to begin providing quotations with actual size on a floor-wide basis within one year. The Exchange will undertake to submit a further proposed rule change when the Exchange is able to disseminate actual size associated with its options quotes and customer limit orders.

The instant proposed rule change does not affect in any respect the Exchange's obligations concerning non-public customer orders.[6] Prior to the April 1, 2001 mandatory compliance date of the amended Quote Rule, the Exchange will establish firm quote requirements with respect to broker-dealers, as required by the amended Quote Rule.

2. Statutory Basis

The Exchange believes that the proposed rule change is consistent with Section 6 of the Act [7] in general, and in particular, with Section 6(b)(5),[8] in that it is designed to perfect the mechanism of a free and open market and a national market system, protect investors and the public interest and promote just and equitable principles of trade by increasing transparency and providing the market place with considerably more information upon which to base order routing decisions.

Finally, after consultation with Commission staff, the Phlx believes that the proposed rule change described in this filing, including permitting SQF users to disseminate actual size when they are able to do so (as described in Footnote No. 5) is consistent with the amended Quote Rule.

B. Self-Regulatory Organization's Statement on Burden on Competition

The Phlx does not believe that the proposed rule change will impose any inappropriate burden on competition.

C. Self-Regulatory Organization's Statement on Comments on the Proposed Rule Change Received from Members, Participants or Others

No written comments were either solicited or received.

III. Date of Effectiveness of the Proposed Rule Change and Timing for Commission Action

Within 35 days of the date of publication of this notice in the **Federal Register** or within such longer period (i) as the Commission may designate up to 90 days or such date if it finds such longer period to be appropriate and publishes its reasons for so finding or (ii) as to which the Phlx consents, the Commission will:

(A) By order approve such proposed rule change, or,

(B) Institute proceedings to determine whether the proposed rule change should be disapproved.

IV. Solicitation of Comments

Interested persons are invited to submit written data, views, and arguments concerning the foregoing, including whether the proposed rule change is consistent with the Act. Persons making written submissions should file six copies thereof with the Secretary, Securities and Exchange Commission, 450 Fifth Street, NW., Washington, DC 20549–0609. Copies of the submission, all subsequent amendments, all written statements with respect to the proposed rule change that are filed with the Commission, and all written communications relating to the proposed rule change between the Commission and any person, other than those that may be withheld from the public in accordance with the provisions of 5 U.S.C. 552, will be available for inspection and copying in the Commission's Public Reference Room. Copies of such filing will also be available for inspection and copying at the principal office of the Phlx. All submissions should refer to file No. SR–Phlx–01–01 and should be submitted by February 8, 2001.

For the Commission by the Division of Market Regulation, pursuant to delegated authority.[9]

Margaret H. McFarland,

Deputy Secretary.

[FR Doc. 01–1406 Filed 1–17–01; 8:45 am]

BILLING CODE 8010–01–M

[4] Exchange Act Rule 11Ac1–1(d)(1)(i), 17 CFR 240.11Ac1–1(d)(1)(i).

[5] In the event that certain Phlx specialist firms are able to develop and implement proprietary systems (called "Specialized Quote Feeds" or "SQFs") that are able to disseminate actual size prior to the Exchange's systems disseminating quotations with actual size on a floor-wide basis, the Phlx would undertake to file a further proposed rule change with the Commission requesting approval to disseminate actual size for those options classes assigned to such specialist firms.

[6] *See* Exchange Rule 1015(b) and Options Floor Procedure Advice A–11.

[7] 15 U.S.C. 78f.

[8] 15 U.S.C. 78f(b)(5).

[9] 17 CFR 200.30–3(a)(12).

DEPARTMENT OF STATE

[Public Notice 3549]

Culturally Significant Objects Imported for Exhibition; Determinations: "Gauguin's Nirvana: Portrait of Meyer de Haan"

AGENCY: United States Department of State.

ACTION: Notice.

SUMMARY: Notice is hereby given of the following determinations: Pursuant to the authority vested in me by the Act of October 19, 1965 (79 Stat. 985, 22 U.S.C. 2459), the Foreign Affairs Reform and Restructuring Act of 1998 (112 Stat. 2681, *et seq.*), Delegation of Authority No. 234 of October 1, 1999, and Delegation of Authority No. 236 of October 19, 1999, as amended, I hereby determine that the objects to be included in the exhibition "Gauguin's Nirvana: Portrait of Meyer de Haan" imported from abroad for the temporary exhibition without profit within the United States, are of cultural significance. These objects are imported pursuant to loan agreements with the foreign lenders. I also determine that the exhibition or display of the exhibit objects at the Wadsworth Atheneum Museum of Art, Hartford, CT from on or about January 26, 2001, through on or about April 29, 2001, is in the national interest. Public Notice of these Determinations is ordered to be published in the **Federal Register**.

FOR FURTHER INFORMATION CONTACT: For further information, including a list of exhibit objects, contact Jacqueline Caldwell, Attorney-Adviser, Office of the Legal Adviser, U.S. Department of State (telephone: 202/619–6982). The address is U.S. Department of State, SA–

44, 301 4th Street, SW., Room 700, Washington, DC 20547–0001.

Dated: January 10, 2001.

William B. Bader,

Assistant Secretary for Educational and Cultural Affairs, Department of State.

[FR Doc. 01–1515 Filed 1–17–01; 8:45 am]

BILLING CODE 4710–08–P

DEPARTMENT OF STATE

[Public Notice 3550]

Culturally Significant Objects Imported for Exhibition; Determinations: ''The Global Guggenheim: Selections From the Extended Collection''; Amendment

DEPARTMENT: United States Department of State.

ACTION: Notice.

SUMMARY: Notice is hereby given of the following determinations: Pursuant to the authority vested in me by the Act of October 19, 1965 [79 Stat. 985, 22 U.S.C. 2459], the Foreign Affairs Reform and Restructuring Act of 1998 [112 Stat. 2681 *et seq.*], Delegation of Authority No. 234 of October 1, 1999 [64 FR 56014], and Delegation of Authority No. 236 of October 19, 1999 [64 FR 57920], as amended, I hereby determine that one additional object to be included in the exhibit, ''The Global Guggenheim: Selections from the Extended Collection,'' imported from abroad for the temporary exhibition without profit within the United States, is of cultural significance. The object will be imported pursuant to a loan agreement with a foreign lender. I also determine that the temporary exhibition or display of the additional object at the Solomon R. Guggenheim Museum, New York, New York, from on or about February 6 to on or about April 22, 2001, is in the national interest. Public Notice of these determinations is ordered to be published in the **Federal Register**.

FOR FURTHER INFORMATION CONTACT: For further information, including a list of exhibit objects, contact Julianne C. Simpson, Attorney-Adviser, Office of the Legal Adviser, 202/619–6529, and the address is SA–44, Room 700, United States Department of State, 301 4th Street, S.W., Washington, DC 20547–0001.

Dated: January 12, 2001.

William B. Bader,

Assistant Secretary for Educational and Cultural Affairs, Department of State.

[FR Doc. 01–1516 Filed 1–17–01; 8:45 am]

BILLING CODE 4710–08–P

DEPARTMENT OF STATE

[Public Notice #3523]

Overseas Security Advisory Council (OSAC) Meeting Notice; Closed Meeting

The Department of State announces a meeting of the U.S. State Department—Overseas Security Advisory Council on February 13, 14, and 15, in San Diego, California. Pursuant to Section 10(d) of the Federal Advisory Committee Act and 5 U.S.C. 552b(c)(1) and (4), it has been determined the meeting will be closed to the public. Matters relative to classified national security information as well as privileged commercial information will be discussed. The agenda will include updated committee reports, a world threat overview and a round table discussion that calls for the discussion of classified and corporate proprietary/security information as well as private sector physical and procedural security policies and protective programs at sensitive U.S. Government and private sector locations overseas.

For more information contact Marsha Thurman, Overseas Security Advisory Council, Department of State, Washington, D.C. 20522–1003, phone: 202–663–0533.

Dated: January 10, 2001.

Peter E. Bergin,

Director of the Diplomatic Security Service, Department of State.

[FR Doc. 01–1517 Filed 1–17–01; 8:45 am]

BILLING CODE 4710–24–P

OFFICE OF THE UNITED STATES TRADE REPRESENTATIVE

Notice of Meeting of the Industry Sector Advisory Committee on Small and Minority Business (ISAC–14)

AGENCY: Office of the United States Trade Representative.

ACTION: Notice of meeting.

SUMMARY: The Industry Sector Advisory Committee on small and Minority Business will hold a meeting on January 29, 2001, from 9:15 a.m. to 3 p.m. The meeting will be opened to the public from 9:15 a.m. to 3 p.m.

DATES: The meeting is scheduled for January 29, 2001, unless otherwise notified.

ADDRESSES: The meeting will be held at the Department of Commerce, Conference room 4830, located at 14th Street between Pennsylvania and Constitution Avenues, NW., Washington, DC.

FOR FURTHER INFORMATION CONTACT: Millie Sjoberg, (202) 482–4792, Department of Commerce, 14th Street and Constitution Avenue, NW., Washington, DC 20230 (principal contact), or Dominic Bianchi, Office of the United States Trade Representative, 1724 F Street, NW., Washington, D.C. 20508, (202) 395–6120.

SUPPLEMENTARY INFORMATION: The following topics will be discussed:

- Discussion on 2001 APEC Small and Medium-sized enterprise (SME) Ministerial;
- Discussion on 2001 Summit of the Americas;
- Discussion on infrastructure security;
- Discussion on trade finance;
- Discussion on customs issues;
- Discussion on electronic commerce;
- Discussion on SME advocacy and outreach; and,
- Committee business.

Dominic Bianchi,

Acting Assistant United States Trade Representative for Intergovernmental Affairs and Public Liaison.

[FR Doc. 01–1532 Filed 1–17–01; 8:45 am]

BILLING CODE 3190–01–M

OFFICE OF THE UNITED STATES TRADE REPRESENTATIVE

Notice of Meeting of the Industry Sector Advisory Committee on Services (ISAC–13)

AGENCY: Office of the United States Trade Representative.

ACTION: Notice of meeting

SUMMARY: The Industry Sector Advisory Committee on Services will hold a meeting on January 23, 2001, from 9 a.m. to 12 noon. The meeting will be opened to the public from 9 a.m. to 9:45 a.m., and closed to the public from 9:45 a.m. to 12 noon.

DATES: The meeting is scheduled for January 23, 2001, unless otherwise notified.

ADDRESSES: The meeting will be held at the Department of Commerce, Conference Room 6057, located at 14th Street between Pennsylvania and Constitution Avenues, NW., Washington, DC.

FOR FURTHER INFORMATION CONTACT: Karen Holderman, (202) 482–0345, Department of Commerce, 14th Street and Constitution Avenue, NW., Washington, DC 20230 (principal contact), or Dominic Bianchi, Office of the United States Trade Representative, 1724 F Street, NW., Washington, DC 20508, (202) 395–6120.

SUPPLEMENTARY INFORMATION: During the opened portion of the meeting the Work Program of the General Agreement on Trade in Services (GATS), and the Proposed Free Trade Agreements between the united States and Singapore and the United States and Chile, will be discussed.

Dominic Bianchi,

Acting Assistant United States Trade Representative for Intergovernmental Affairs and Public Liaison.

[FR Doc. 01–1533 Filed 1–17–01; 8:45 am]

BILLING CODE 3190–01–M

DEPARTMENT OF TRANSPORTATION

Coast Guard

[USCG–2001–8660]

Random Drug Testing Rate for Covered Crewmembers

AGENCY: Coast Guard, DOT.

ACTION: Notice of minimum random drug testing rate.

SUMMARY: The Coast Guard has set the calendar year 2001 minimum random drug testing rate at 50 percent of covered crewmembers. An evaluation of the 1999 Management Information System (MIS) data collection forms submitted by marine employers determined that random drug testing on covered crewmembers for the calendar year 1999 resulted in positive test results 1.7 percent of the time. Based on this percentage, we will maintain the minimum random drug testing rate at 50 percent of covered crewmembers for the calendar year 2001.

DATES: The minimum random drug testing rate is effective January 1, 2001 through December 31, 2001. You must submit your 2000 MIS reports no later than March 15, 2001.

ADDRESSES: You must mail your annual MIS report to Commandant (G–MOA), U.S. Coast Guard Headquarters, 2100 Second Street SW., Room 2403, Washington, DC 20593–0001.

FOR FURTHER INFORMATION CONTACT: For questions about this notice, please contact Lieutenant Jennifer Ledbetter, Project Manager, Office of Investigations and Analysis (G–MOA), U.S. Coast Guard Headquarters, telephone 202–267–0684.

SUPPLEMENTARY INFORMATION: Under 46 CFR 16.230, the Coast Guard requires marine employers to establish random drug testing programs for covered crewmembers on inspected and uninspected vessels. All marine employers are required to collect and maintain a record of drug testing program data for each calender year, January 1 through December 31. You must submit this data to the Coast Guard in an annual MIS report (Form CG–5573 found in appendix B of 46 CFR 16). You may either submit your own MIS report or have a consortium or other employer representative submit the data in a consolidated MIS report. The chemical drug testing data is essential to analyze our current approach for deterring and detecting illegal drug abuse in the maritime industry.

Since 1999 MIS data indicates that the positive random testing rate is greater than one percent industry-wide (1.7 percent), the Coast Guard announces that the minimum random drug testing rate is set at 50 percent of covered employees for the period of January 1, 2001 through December 31, 2001 in accordance with 46 CFR 16.230(e).

You must submit your MIS report to the Coast Guard no later than March 15 of each calendar year. Each year we will publish a notice reporting the results of the previous calendar year's MIS data, and the minimum annual percentage rate for random drug testing for the next calendar year.

Dated: January 8, 2001.

R.C. North,

Rear Admiral, U.S. Coast Guard, Assistant Commandment for Marine Safety and Environmental Protection.

[FR Doc. 01–1545 Filed 1–17–01; 8:45 am]

BILLING CODE 4910–15–M

DEPARTMENT OF TRANSPORTATION

Federal Aviation Administration

Aviation Rulemaking Advisory Committee and Executive Committee; Meetings

AGENCY: Federal Aviation Administration (FAA), DOT,

ACTION: Notice of meeting.

SUMMARY: The FAA is issuing this notice to advise the public of a meeting of the full Aviation Rulemaking Advisory Committee (ARAC) and Executive Committee of the Federal Aviation Administration's Aviation Rulemaking Advisory Committee. It has been nearly ten years since the last full committee meeting and the membership has expanded considerably since that time. The purpose of the meeting is to bring the full Committee together to discuss operational procedures, the future vision for ARAC, and committee accomplishments.

DATES: The full ARAC meeting will be held February 7, 2001, from 10 a.m.–12 Noon and the Executive Committee will begin at 1 p.m.

ADDRESSES: The meeting will be held at the Hyatt Regency Crystal City, 2799 Jefferson Davis Highway, Arlington, VA 22202.

FOR FURTHER INFORMATION CONTACT: Gerri Robinson, Federal Aviation Administration, 800 Independence Avenue, SW., Washington, DC 20591, telephone (202) 267–9678; fax (202) 267–5075; e-mail *Gerri.Robinson@faa.gov.*

SUPPLEMENTARY INFORMATION: Pursuant to section 10(a)(2) of the Federal Advisory Committee Act (Pub. L. 92–463; 5 U.S.C. App. II), notice is hereby given of a meeting of the full Aviation Rulemaking Advisory Committee and the Aviation Rulemaking Advisory Committee Executive Committee to be held on February 7, 2001, at Hyatt Regency Crystal City. The agenda will include:

Full ARAC Committee Meeting, 10 a.m.–12 Noon:

- Welcome and introductions—Anthony Fazio, Executive Director, and Albert Prest, Chair.
- Remarks—Thomas E. McSweeney, Association Administrator for Regulation and Certification, Federal Aviation Administration.
- Federal Advisory Committee Act (FACA) requirements.
- Roles/Responsibilities.
- Public accessibility to ARAC information.
- Scheduled comments and statements to the committee.
- Adjournment.

Executive Committee Meeting, 1:00 p.m.

- Review and approval of previous meeting minutes.
- Status Report Fuel Tank Inerting working group.
- Status Report from Assistant Chairs.
- Remarks from other EXCOM members.
- Proposed meetings dates for CY 2001: May 9, August 8, and Nov. 7.

Attendance is open to the interested public but will be limited to the space available. Please contact the person listed under the heading **FOR FURTHER INFORMATION CONTACT** by January 31, 2001, if you plan to attend either of these meetings, plan to present a verbal statement, or you are in need of assistance or require a reasonable accommodation for this meeting. Requests to present a verbal statement should include a written summary of the remarks. Please focus your remarks and/or statements on the operations of ARAC, specific activities, projects or

goals of the advisory committee, and benefits to the aviation public.

Individuals making verbal presentations or providing written statements at either meeting should bring at least 25 copies of the written material to the meeting. Copies of the materials may be provided to the audience at the discretion of the submitter.

The Committee will try to accommodate all speakers. Each speaker will be limited to no more than a 5-minute presentation. If available time does not permit this, speakers generally will be scheduled on a first-come-first-served basis. However, ARAC leadership reserves the right to exclude some speakers, if necessary, to present a balance of viewpoints and issues.

Issued in Washington, DC, on January 11, 2001.

Anthony F. Fazio,

Executive Director, Aviation Rulemaking Advisory Committee.

[FR Doc. 01–1506 Filed 1–12–01; 3:37 pm]

BILLING CODE 4910–13–M

DEPARTMENT OF TRANSPORTATION

Federal Aviation Administration

Notice of Intent To Rule on Application To Impose and Use the Revenue From a Passenger Facility Charge (PFC) at Cincinnati/Northern Kentucky International Airport, Covington, KY

AGENCY: Federal Aviation Administration (FAA), DOT.

ACTION: Notice of intent to rule on application.

SUMMARY: The FAA proposes to rule and invites public comment on the application to impose and use the revenue from a PFC at Cincinnati/Northern Kentucky International Airport under the provisions of the Aviation Safety and Capacity Expansion Act of 1990 (Title IX of the Omnibus Budget Reconciliation Act of 1990) (Pub. L. 101–508) and Part 158 of the Federal Aviation Regulations (14 CFR Part 158).

DATES: Comments must be received on or before February 20, 2001.

ADDRESSES: Comments on this application may be mailed or delivered in triplicate to the FAA at the following address: Memphis Airports District Office, 3385 Airways Boulevard, Suite 302, Memphis, Tennessee 38116–3841.

In addition, one copy of any comments submitted to the FAA must be mailed or delivered to Mr. Robert F. Holscher, Director of Aviation of the Kenton County Airport Board at the following address: P.O. Box 752000, Cincinnati, Ohio 45275–2000.

Air carriers and foreign air carriers may submit copies of written comments previously provided to the Kenton County Airport Board under section 158.23 of Part 158.

FOR FURTHER INFORMATION CONTACT: Mr. Jerry O. Bowers, Program Manager, Memphis Airports District Office, 3385 Airways Boulevard, Suite 302, Memphis, Tennessee 38116–3841, (901) 544–3495, Extension 21. The application may be reviewed in person at this same location.

SUPPLEMENTARY INFORMATION: The FAA proposes to rule and invites public comment on the application to impose and use the revenue from a PFC at Cincinnati/Northern Kentucky International Airport under the provisions of the Aviation Safety and Capacity Expansion Act of 1990 (Title IX of the Omnibus Budget Reconciliation Act of 1990) (Pub. L. 101–508) and Part 158 of the Federal Aviation Regulations (14 CFR Part 158).

On January 10, 2001, the FAA determined that the application to impose and use the revenue from a PFC submitted by Kenton County Airport Board was substantially complete within the requirements of section 158.25 of Part 158. The FAA will approve or disapprove the application, in whole or in part, no later than April 26, 2001.

The following is a brief overview of the application.

PFC Application No.: 01–06–C–00–CVG.

Level of the proposed PFC: $3.00.

Proposed charge effective date: July 1, 2001.

Proposed charge expiration date: March 1, 2002.

Total estimated net PFC revenue: $22,216,000.

Brief description of proposed project(s): Implement Noise Compatibility Program (NCP) Measures—1999 Part 150 Study Update, Construct Upgrade to Aircraft Rescue and Firefighting (ARFF) Facility, Close South Detention Basin, and Acquire FAR 107.14 Security Access System—reimbursement for original acquisition.

Class or classes of air carriers which the public agency has requested not be required to collect PFCs: (1) FAR Part 121 supplemental operators which operate at the Airport without an operating agreement with the Board and enplane less than 1,500 passengers per year and (2) Part 135 on-demand air taxis, both fixed wing and rotary.

Any person may inspect the application in person at the FAA office listed above under **FOR FURTHER INFORMATION CONTACT**.

In addition, any person may, upon request, inspect the application, notice and other documents germane to the application in person at the Kenton County Airport Board.

Issued in Memphis, Tennessee on January 10, 2001.

LaVerne F. Reid,

Manager, Memphis Airports District Office, Southern Region.

[FR Doc. 01–1551 Filed 1–17–01; 8:45 am]

BILLING CODE 4910–13–M

DEPARTMENT OF TRANSPORTATION

Federal Aviation Administration

Notice of Intent To Rule on Application To Use and To Impose and Use the Revenue From a Passenger Facility Charge (PFC) at Meadows Field Airport, Bakersfield, CA

AGENCY: Federal Aviation Administration (FAA), DOT.

ACTION: Notice of intent to rule on application.

SUMMARY: The FAA proposes to rule and invites public comment on the application to use and to impose and use the revenue from a PFC at Meadows Field Airport under the provisions of the Aviation Safety and Capacity Expansion Act of 1990 (Title IX of the Omnibus Budget Reconciliation Act of 1990) (Pub. L. 101–508) and Part 158 of the Federal Aviation Regulations (14 CFR Part 158).

DATES: Comments must be received on or before February 20, 2001.

ADDRESSES: Comments on this application may be mailed or delivered in triplicate to the FAA at the following address: Airports Division, 15000 Aviation Blvd., Room 3024, Lawndale, CA 90261. In addition, one copy of any comments submitted to the FAA must be mailed or delivered to Mr. Raymond Bishop, Director of Airports of the county of Kern at the following address: 1401 Skyway Drive, Suite 200, Bakersfield, CA 93308. Air carriers and foreign air carriers may submit copies of written comments previously provided to the county of Kern under section 158.23 of Part 158.

FOR FURTHER INFORMATION CONTACT: Mr. David Delshad, Airports Program Engineer, Standards Section, Airports Division, 15000 Aviation Blvd., Room 3024, Lawndale, CA 90261, Telephone: (310) 725–3627. The application may be reviewed in person at this same location.

SUPPLEMENTARY INFORMATION: The FAA proposes to rule and invites public comment on the application to use and to impose and use the revenue from a PFC at Meadows Field Airport under the provisions of the Aviation Safety and Capacity Expansion Act of 1990 (Title IX of the Omnibus Budget Reconciliation Act of 1990) (Pub. L. 101–508) and Part 158 of the Federal Aviation Regulations (14 CFR Part 158). On December 15, 2000, the FAA determined that the application to use and to impose and use the revenue from a PFC submitted by the county of Kern was substantially complete within the requirements of § 158.25 of Part 158. The FAA will approve or disapprove the application, in whole or in part, no later than March 17, 2001. The following is a brief overview of the application.

Project No. 1 (use project)

Level of proposed PFC: $3.00.

Charge effective date: January 1, 2000.

Proposed charge expiration date: May 1, 2002.

Total estimated PFC revenue: $317,000.

Brief description of proposed project: Land acquisition for Airport Expansion

Project No. 2 (impose and use project).

Level of Proposed PFC: $4.50.

Proposed charge effective date: June 1, 2001.

Proposed charge expiration date: February 1, 2014.

Total estimated PFC revenue: $9,086,000.

Brief description of proposed project: Construct new passenger terminal Class or classes of air carriers which the public agency has requested not be required to collect PFCs: None.

Any person may inspect the application in person at the FAA office listed above under **FOR FURTHER INFORMATION CONTACT**. In addition, any person may, upon request, inspect the application, notice and other documents germane to the application in person at the Meadows Field Airport Administration Office.

Issued in Hawthorne, California, on December 22, 2000.

Ellsworth Chan,

Acting Manager, Airports Division Western-Pacific Region.

[FR Doc. 01–1552 Filed 1–17–01; 8:45 am]

BILLING CODE 4910–13–M

DEPARTMENT OF TRANSPORTATION

Federal Highway Administration

Environmental Impact Statement: King County, WA

AGENCY: Federal Highway Administration (FHWA), DOT.

ACTION: Notice of Intent.

SUMMARY: The FHWA is issuing this notice to advise the public that an environmental impact statement will be prepared for a proposed road project in King County, Washington.

FOR FURTHER INFORMATION CONTACT: Elizabeth Healy, Transportation and Environmental Engineer, Federal Highway Administration, 711 South Capitol Way, Suite 501, Olympia, Washington 98501–1284, Telephone: (360) 534–9323 or Alan Andree, Senior Engineer, King County, Road Services Division, Department of Transportation, King Street Center M.S. KSC–TR–0231, 201 South Jackson Street, Seattle, WA 98104–3856, Telephone: (206) 296–8086.

SUPPLEMENTARY INFORMATION: The FHWA, in cooperation with the Washington State Department of Transportation and King County Department of Transportation, will prepare an environmental impact statement (EIS) on a proposal to improve a portion of Northwest Novelty Hill Road in King County, Washington. The proposed improvement to the Northeast Novelty Hill Road would involve improvements to the road, and would include stormwater detention facilities, safety improvements and pedestrian, equestrian and bicycle facilities. The project is located between Avondale Road Northeast and the Redmond Ridge (formerly Northridge and Blakely Ridge) urban planned developments, including intersection improvements at 243rd Avenue Northeast, an approximately three mile long corridor.

Improvements to the road are considered necessary to reduce anticipated traffic congestion and improve safety by increasing vehicle capacity and providing improved pedestrian and bicycle facilities. Alternatives under consideration include (1) taking no action; (2) constructing a three-lane road; (3) constructing a five-lane road. Incorporated into and studied with the various build alternatives will be design variations of grade and alignment.

Letters describing the proposed action and soliciting comments will be sent to appropriate Federal, State, and local agencies, and to private organizations and citizens who have previously expressed or are known to have interest in this proposal. A series of public meetings will be held in King County between January 2001 and February 2002. In addition, a public hearing will be held. Public notice of actions related to the proposal which identify the date, time and place of the meetings and hearings, and note the length of review periods will be published when appropriate. The draft EIS will be available for public and agency review and comment prior to the public hearing. A formal scoping meeting is planned for Tuesday, January 23, 2001 and will be announced in the local news media and through a public mailing.

To ensure that the full range of issues related to this proposed action are addressed and all significant issues identified, comments, and suggestions are invited from all interested parties. Comments or questions concerning this proposed action and the EIS should be directed to the FHWA at the address provided above.

(Catalog of Federal Domestic Assistance program Number 20.205, Highway Planning and Construction. The regulations implementing Executive order 12372 regarding intergovernmental consultation on Federal programs and activities apply to this program)

Issued on: January 9, 2001.

Elizabeth Healy,

Transportation and Environmental Engineer, Olympia, Washington.

[FR Doc. 01–1508 Filed 1–17–01; 8:45 am]

BILLING CODE 4910–22–M

DEPARTMENT OF TRANSPORTATION

Federal Highway Administration

Environmental Impact Statement: King County, WA

AGENCY: Federal Highway Administration, King County, Washington.

ACTION: Notice of intent to prepare an environmental impact statement.

SUMMARY: The FHWA is issuing this notice to advise the public that a joint NEPA/SEPA Environmental Impact Statement will be prepared for a proposed bicycle/pedestrian trail. The trail would be located primarily along a former rail corridor on the east side of Lake Sammamish between the Cities of Issaquah and Redmond in King County, Washington. The EIS will be prepared in conjunction with King County Department of Construction and Facilities Management.

FOR FURTHER INFORMATION CONTACT: Elizabeth Healy, Transportation and Environmental Engineer, Federal Highway Administration, 711 S. Capitol Way, Suite 501, Olympia, WA 98501, Telephone (360) 753–9480; or Ms. Robin Cole, Project Manager, King County Department of Construction and Facilities Management, 500 Fourth

Avenue, Room 320, Seattle, WA 98104, Telephone (206) 296–4261.

SUPPLEMENTARY INFORMATION: The purpose of the proposed project is to design and construct a multi-use recreational trail and alternative transportation corridor primarily within the 10.8-mile former Burlington-Northern Santa Fe rail corridor, and to protect the federal railbanking status of the corridor, which was granted in September 1998. This East Lake Sammamish Trail would extend along the east side of Lake Sammamish from Redmond to Issaquah, linking King County's Marymoor Park and West Lake Sammamish Trail to Lake Sammamish State Park and other local and regional trails.

At this time, three alternatives are being considered: a No Action alternative, use of primarily the existing railbed with some off-railbed use, and use of the existing rail corridor with some off-corridor use. The range of alternatives may, however, be modified as a result of public involvement process.

Potential Environmental Issues

King County has conducted a community outreach and preliminary environmental evaluation process. As a result, the County and FWHA have identified the following areas of potentially significant environmental impacts associated with the proposed project: surface water, geology and soils, noise, land and shoreline use, vegetation, wildlife, fisheries, public services and utilities, transportation, safety, recreation, and aesthetics. Additional areas of potential impact may be identified during public involvement.

Public Involvement and Scoping Meetings

During spring and summer 2000, Neighborhood Vision Workshops and User Group Workshops were held by King County to gather information from neighbors of the trail and potential user groups including cyclists, runners, pedestrians, and equestrians.

King County held a public SEPA scoping meeting on November 15, 2000 to provide an opportunity for the public to help the project team identify issues for consideration and evaluation in the environmental review process. The meeting was held at the Inglewood Junior High School, 24120 NE 8th, Redmond, WA 98053.

A public scoping meeting will be held on February 20, 2001 to provide additional opportunity to ensure that proposed alternatives respond to previous input and are comprehensive. Notice of this meeting was also published in local newspapers, including the Seattle Times, the Eastside Journal, and the Issaquah Press. The February 20th scoping meeting will be held at: Skyline High School (Commons Area), 1122–228th Avenue SE, Sammamish, WA 98075, from 6:00 p.m. to 8:30 p.m.

To ensure that the full range of issues related to this proposed action are addressed and all significant issues identified, comments, and suggestions are invited from all interested parties. Comments or questions concerning this proposed action and the EIS should be directed to the FHWA at the address provided above.

(Catalog of Federal Domestic Assistance Program Number 20.205, Highway Planning and Construction. The regulations implementing Executive Order 12372 regarding intergovernmental consultation on Federal programs and activities apply to this program)

Issued on: January 9, 2001.

Elizabeth Healy,

Transportation and Environmental Engineer, Olympia, Washington.

[FR Doc. 01–1509 Filed 1–17–01; 8:45 am]

BILLING CODE 4910–22–M

DEPARTMENT OF TRANSPORTATION

Federal Railroad Administration

Petition for Waiver of Compliance

In accordance with part 211 of title 49 Code of Federal Regulations (CFR), notice is hereby given that the Federal Railroad Administration (FRA) received a request for a waiver of compliance with certain requirements of its safety standards. The individual petition is described below, including the party seeking relief, the regulatory provisions involved, the nature of the relief being requested, and the petitioner's arguments in favor of relief.

Battle Ground, Yacolt & Chelatchie Prairie Railroad

[Docket Number FRA–2000–8501]

The Battle Ground, Yacolt & Chelatchie Prairie Railroad seeks a permanent waiver of compliance with the Safety Glazing Standards, 49 CFR part 223.1(c) which requires certified glazing in all locomotive windows, with the exception of locomotives used in yard service.

The Battle Ground, Yacolt & Chelatchie Prairie Railroad seeks relief for locomotive number 112 (AAR number designation pending), built in 1951 by American Locomotive Company (ALCO) for the Longview, Portland and Northern Railroad. This locomotive is currently equipped with Duolite A25, Duolite A5 110, Safety Sheeting AS2 Laminated M91 and Laminated Auto Safety Glazing. The operating railroad indicates that the locomotive will be utilized in passenger excursion service between Battle Ground, Washington (MP 14) and Chelatchie, Washington (MP 33).

All communications concerning these proceedings should identify the appropriate docket number (*e.g.,* Waiver Petition Docket Number FRA–2000–8501 and must be submitted to the Docket Clerk, DOT Central Docket Management Facility, Room Pl–401, Washington, DC 20590–0001. Communications received within 45 days of the date of this notice will be considered by FRA before final action is taken. Comments received after that date will be considered as far as practicable. All written communications concerning these proceedings are available for examination during regular business hours (9 a.m.–5 p.m.) at the above facility. All documents in the public docket are also available for inspection and copying on the Internet at the docket facility's Web site at http://dms.dot.gov.

Issued in Washington, DC on January 10, 2001.

Grady C. Cothen, Jr.,

Deputy Associate Administrator for Safety Standards and Program Development.

[FR Doc. 01–1559 Filed 1–17–01; 8:45 am]

BILLING CODE 4910–06–P

DEPARTMENT OF TRANSPORTATION

Federal Railroad Administration

[Waiver Petition Docket Number FRA–2000–8268]

Petition for Waivers of Compliance

In accordance with 49 CFR §§ 211.9 and 211.41, notice is hereby given that the Federal Railroad Administration (FRA) has received a request for a waiver of compliance with certain requirements of the Federal safety laws and regulations. The petition is described below, including the party seeking relief, the regulatory provisions involved, the nature of the relief being requested, and the petitioner's arguments in favor of relief.

Burlington Northern Santa Fe Railway Company

Burlington Northern Santa Fe Railway (BNSF) seeks a permanent waiver of compliance from certain requirements of 49 CFR part 229 (Railroad Locomotive Safety Standards) for a

select group of C–44–9W locomotives, road numbers BNSF 700–799, 960–1123, 4300–4999, and 5370–5499. Specifically, BNSF requests a waiver from 49 CFR 229.23(a), which requires that the interval between any two periodic inspections may not exceed 92 days. BNSF proposes to extend this interval to 122 days on this group of locomotives.

In support of this proposal BNSF states: ''These locomotives contain the industry's latest technology in the areas of safety and reliability, are microprocessor controlled and equipped with New York Air Brake Corporation computer controlled brakes.'' They cite calender day inspections and other inspections that are done every 3 to 4 days which will help ensure safe operation. Since April 1, 1999, they have been performing periodic inspections every 61 days. They estimate that they have had a 0.87% defect rate after 61 days. In conclusion BNSF states: ''Extending the periodic maintenance interval from 92 to 122 days will not adversely effect the safety or performance of C44–9W locomotives.''

Interested parties are invited to participate in these proceedings by submitting written reviews, data, or comments. If any interested party desires an opportunity for oral comment, they should notify FRA, in writing, before the end of the comment period and specify the basis for their request. FRA will schedule a public hearing in connection with these proceedings if the basis is found to be sufficient.

All communications concerning these proceedings should identify the appropriate docket number, (*e.g.,* Waiver Petition Docket Number FRA–2000–8268) and must be submitted to the DOT Docket Management Facility, Room PL–401 (Plaza Level), 400 Seventh Street, SW., Washington, DC 20590. Communications received within 45 days from the date of this notice will be considered by FRA before final action is taken. Comments received after that date will be considered as far as practicable. All written communications concerning these proceedings are available for examination during regular business hours (9 a.m.–5 p.m.) at the above facility. All documents in the public docket are also available for inspection and copying on the Internet at the docket facility's web site at http://dms.dot.gov.

Issued in Washington, DC on January 11, 2001.

Grady C. Cothen, Jr.,

Deputy Associate Administrator for Safety Standards and Program Development.

[FR Doc. 01–1555 Filed 1–17–01; 8:45 am]

BILLING CODE 4910–06–P

DEPARTMENT OF TRANSPORTATION

Federal Railroad Administration

Petition for Waiver of Compliance

In accordance with part 211 of title 49 Code of Federal Regulations (CFR), notice is hereby given that the Federal Railroad Administration (FRA) received a request for a waiver of compliance with certain requirements of its safety standards. The individual petition is described below, including the party seeking relief, the regulatory provisions involved, the nature of the relief being requested, and the petitioner's arguments in favor of relief.

Carthage, Knightstown & Shirley Railroad Company

[Docket Number FRA–2000–8364]

The Carthage, Knightstown & Shirley Railroad Company (CKSI) seeks a permanent waiver of compliance for two locomotives from the requirements of the Safety Glazing Standards, 49 CFR part 223, which requires certified glazing in all locomotive windows, except those locomotives used in yard service. The railroad indicates that the locomotives number CKSI 468 and CKSI 215 are General Electric 45 ton center cab locomotives used passenger excursion service through mostly rural areas, 10 mile round trip in the Knightstown, Indiana area. The railroad operates May through October, on weekends, Friday, Saturday, and Sunday.

Interested parties are invited to participate in these proceedings by submitting written views, data, or comments. FRA does not anticipate scheduling a public hearing in connection with these proceedings since the facts do not appear to warrant a hearing. If any interested party desires an opportunity for oral comment, they should notify FRA, in writing, before the end of the comment period and specify the basis for their request.

All communications concerning these proceedings should identify the appropriate docket number (*e.g.,* Waiver Petition Docket Number FRA–2000–8364) and must be submitted in triplicate to the Docket Clerk, DOT Central Docket Management Facility, Room Pl–401, Washington, DC 20590–0001. Communications received within 45 days of the date of this notice will be considered by FRA before final action is taken. Comments received after that date will be considered as far as practicable. All written communications concerning these proceedings are available for examination during regular business hours (9 a.m.–5 p.m.) at DOT Central Docket Management Facility, Room Pl–401 (Plaza Level), 400 Seventh Street SW., Washington, DC. All documents in the public docket are also available for inspection and copying on the Internet at the docket facility's Web site at http://dms.dot.gov.

Issued in Washington, DC on January 10, 2001.

Grady C. Cothen, Jr.,

Deputy Associate Administrator for Safety Standards and Program Development.

[FR Doc. 01–1558 Filed 1–17–01; 8:45 am]

BILLING CODE 4910–06–P

DEPARTMENT OF TRANSPORTATION

Federal Railroad Administration

Petition for Waiver of Compliance

In accordance with part 211 of title 49 Code of Federal Regulations (CFR), notice is hereby given that the Federal Railroad Administration (FRA) received a request for a waiver of compliance with certain requirements of its safety standards. The individual petition is described below, including the party seeking relief, the regulatory provisions involved, the nature of the relief being requested, and the petitioner's arguments in favor of relief.

Massena Terminal Railroad Company

[Docket Number FRA–2000–7949]

Massena Terminal Railroad Company (MSTR) seeks a permanent waiver of compliance with the Railroad Safety Appliance Standards, 49 CFR part 231.28(a) Running Boards, which references 231.1(c) Running Boards: (1) Number—One longitudinal running board; (2) Dimensions—Longitudinal running board shall be not less than 18 and preferably 20 inches in width; and (3) Location—Full length of car, center of roof.

MSTR is seeking relief for 75 Aluminum Covered Hopper Cars that were originally designed with 10 hatch covers, five down each side, and a running board positioned down the center of the car. Due to financial considerations MSTR has recently contracted with a facility, for the loading and unloading of these cars, that cannot accommodate this design. To facilitate the loading process MSTR has

removed the running boards and positioned six (6) hatches down the center of the car. MSTR states that the loading facility employees access the roof via a permanent platform built to the same height as the car roof. They further claim that the cars are repaired at a site with a similar platform and to their knowledge no one else mounts the top of the car, therefore the running boards are unnecessary. They contend that the running boards would create a tripping hazard if applied down each side of the car roof as is currently the case with other covered hoppers with center mounted hatches. MSTR also sites cost and time constraints in relocating the running board as this would require removing two more hatch covers, welding aluminum plates over the hatches and remounting the running boards on the outside of the cars.

All communications concerning these proceedings should identify the appropriate docket number (*e.g.,* Waiver Petition Docket Number FRA–2000–7949) and must be submitted to the Docket Clerk, DOT Central Docket Management Facility, Room Pl–401 (Plaza Level), 400 Seventh Street, SW., Washington, DC 20590–0001. Communications received within 45 days of the date of this notice will be considered by FRA before final action is taken. Comments received after that date will be considered as far as practicable. All written communications concerning these proceedings are available for examination during regular business hours (9 a.m.–5 p.m.) at the above facility. All documents in the public docket are also available for inspection and copying on the Internet at the docket facility's Web site at http://dms.dot.gov.

Issued in Washington, DC on January 10, 2001.

Grady C. Cothen, Jr.,

Deputy Associate Administrator for Safety Standards and Program Development.

[FR Doc. 01–1557 Filed 1–17–01; 8:45 am]

BILLING CODE 4910–06–P

DEPARTMENT OF TRANSPORTATION

Federal Railroad Administration

Petition for Waiver of Compliance

In accordance with part 211 of title 49 Code of Federal Regulations (CFR), notice is hereby given that the Federal Railroad Administration (FRA) received a request for a waiver of compliance with certain requirements of its safety standards. The individual petition is described below, including the party seeking relief, the regulatory provisions involved, the nature of the relief being requested, and the petitioner's arguments in favor of relief.

Blacklands Railroad

[Docket Number FRA–2000–8366]

The Blacklands Railroad (BLR) of Sulphur Springs, Texas, has petitioned for a permanent waiver of compliance for one locomotive from the requirements of Safety Glazing Standards, 49 CFR part 223, which requires certified glazing. The BLR is located in Sulphur Springs, Texas. The BLR states that this locomotive is used in light switching service and operates over 65 miles of track, from Greenville, TX, through Commerce, Sulphur Springs, TX. It also states that it has an additional 10 miles of trackage rights over the Union Pacific Railroad for interchange in their Mt. Pleasant yard. The average track apeed is 10–15 miles per hour with a maximum speed of 20 miles per hour.

Interested parties are invited to participate in these proceedings by submitting written views, data, or comments. FRA does not anticipate scheduling a public hearing in connection with these proceedings since the facts do not appear to warrant a hearing. If any interested party desires an opportunity for oral comment, they should notify FRA, in writing, before the end of the comment period and specify the basis for their request.

All communications concerning these proceedings should identify the appropriate docket number (e.g., Waiver Petition Docket Number FRA–2000–8366) and must be submitted in triplicate to the Docket Clerk, DOT Central Docket Management Facility, Room P1–401, Washington, DC 20590–0001. Communications received within 45 days of the date will be considered as far as practicable. All written communications concerning these proceedings are available for examination during regular business hours (9:00 a.m.–5:00 p.m.) at DOT Central Docket Management Facility, Room P1–401 (Plaza Level), 400 Seventh Street SW., Washington, DC. All documents in the public docket are also available for inspection and copying on the internet at the facility's Web site at *http://dms.dot.gov.*

Issued in Washington, DC, on January 11, 2001.

Grady C. Cothen, Jr.,

Deputy Associate Administrator for Safety Standards and Program Development.

[FR Doc. 01–1556 Filed 1–17–01; 8:45 am]

BILLING CODE 4910–06–P

DEPARTMENT OF TRANSPORTATION

Federal Railroad Administration

[Docket Number FRA–2000–8267]

Petition for Waiver of Compliance

In accordance with part 211 of title 49 Code of Federal Regulations (CFR) notice is hereby given that the Federal Railroad Administration (FRA) received a request for a waiver of compliance with certain requirements of its safety standards. The individual petition is described below, including the party seeking relief, the regulatory provisions involved, the nature of the relief being requested, and the petitioner's arguments in favor of relief.

Oil Creek & Titusville Lines

The Oil Creek & Titusville Lines (OCTL), seeks a waiver of compliance from certain provisions of the Safety Glazing Standards, 49 CFR 223, which requires certified glazing, for one locomotive. The OCTL is located in Titusville, Pennsylvania. The OCTL states they operate a short line freight operation and additionally an excursion railroad operation over 15.8 miles of track through rural countryside and one community on an average of two (2) round trips per week freight and three (3) round trips per week for passenger excursions.

Interested parties are invited to participate in these proceedings by submitting written views, data, or comments. FRA does not anticipate scheduling a public hearing in connection with these proceedings since the facts do not appear to warrant a hearing. If any interested party desires an opportunity for oral comment, they should notify FRA, in writing, before the end of the comment period and specify the basis for their request.

All communications concerning these proceedings should identify the appropriate docket number (*e.g.,* Waiver Petition Docket Number FRA–2000–8267) and must be submitted in triplicate to the Docket Clerk, DOT Central Docket Management Facility, Room P1–401, Washington, DC 20590–0001. Communications received within 45 days of the date of this notice will be considered by FRA before final action been taken. Comments received after that date will be considered as far as practicable. All written communications concerning the proceedings are available for examination during regular business hours (9:00 a.m.–5:00 p.m.) at DOT Central Docket Management Facility, Room P10401 (Plaza Level), 400 Seventh Street, SW., Washington, DC.

All documents in the public docket are also available for inspection and copying on the internet at the docket facility's Web site at *http://dms.dot.gov.*

Issued in Washington, DC, on January 11, 2001.

Grady C. Cothen, Jr.,

Deputy Associate Administrator for Safety Standards and Program Development.

[FR Doc. 01–1554 Filed 1–17–01; 8:45 am]

BILLING CODE 4910–06–P

DEPARTMENT OF TRANSPORTATION

National Highway Traffic Safety Administration

[Docket No. NHTSA–00–7638; Notice 2]

Recommendations for Establishing Global Technical Regulations Under the United Nations/Economic Commission for Europe 1998 Global Agreement; Motor Vehicle Safety

AGENCY: National Highway Traffic Safety Administration (NHTSA), Department of Transportation.

ACTION: NHTSA's recommendations to WP.29 for regulations to be considered under the 1998 Global Agreement.

SUMMARY: In July 2000, NHTSA published a notice seeking comments on its preliminary recommendations for the first motor vehicle safety technical regulations to be considered for establishment under the United Nations Economic Commission for Europe 1998 Global Agreement. NHTSA has reviewed and considered all public comments submitted in response to the notice and has prepared final recommendations to present to the World Forum for the Harmonization of Vehicle Regulations (WP.29) at the March 2001 meeting in Geneva. NHTSA will use the recommendations in deliberating with other Contracting Parties concerning the adoption of a program of work under the 1998 Global Agreement.

FOR FURTHER INFORMATION CONTACT: For technical and policy issues: Ms. Julie Abraham, Director, Office of International Policy and Harmonization, National Highway Traffic Safety Administration, 400 Seventh Street, SW, Washington, DC 20590. Telephone: (202) 366–2114. Fax: (202) 366–2559.

For legal issues: Nancy Bell, Attorney Advisor, Office of the Chief Counsel, NCC–20, National Highway Traffic Safety Administration, 400 Seventh Street, SW, Washington, DC 20590. Telephone: (202) 366–2992. Fax: (202) 366–3820.

SUPPLEMENTARY INFORMATION: You may read the materials placed in Docket No. NHTSA–00–7638 (*e.g.,* the comments submitted in response to the request for comments by other interested persons) by visiting the address: Docket Management, Room PL–401, 400 Seventh Street, SW., Washington, DC, 20590. The hours of the Docket Management System (DMS) are indicated above in the same location. Alternatively, you may read the materials electronically on the Internet. To do so, take the following steps:

(1) Go to the Web page of the Department of Transportation DMS (http://dms.dot.gov/).

(2) On that page, click on ''search'' near the top of the page or scroll down to the words ''Search the DMS Web'' and click on them.

(3) On the next page (http://dms.dot.gov/search/), scroll down to ''Docket Number'' and type in the four-digit docket number (7638) shown in the title at the beginning of this notice. After typing the docket number, click on ''search.''

(4) On the next page (''Docket Summary Information''), which contains docket summary information for the materials in the docket you selected, scroll down to ''search results'' and click on the desired materials. You may download the materials.

Table of Contents

I. Background
II. NHTSA's Final Recommendations to WP.29
A. Consideration of Comments
B. Recommended Priorities
III. Future Actions

I. Background

The U.S. became a signatory to the United Nations/Economic Commission for Europe (UN/ECE) Agreement Concerning the Establishment of Global and Technical Regulations for Wheeled Vehicles, Equipment and Parts Which Can Be Fitted And/or Be Used On Wheeled Vehicles (the ''1998 Global Agreement'') in June 1998. The 1998 Global Agreement, which entered into force on August 25, 2000, provides for the establishment of global technical regulations regarding the safety, emissions, energy conservation and theft prevention of wheeled vehicles, equipment and parts.[1] The Agreement contains procedures for establishing global technical regulations by either harmonizing existing regulations or developing a new regulation.

On July 18, 2000, in anticipation of the entry into force of the 1998 Global Agreement, NHTSA published a notice to obtain public comments on a list of preliminary recommendations of standards or aspects of standards for consideration by Contracting Parties in prioritizing the development and establishment of global technical regulations under the 1998 Global Agreement. (65 Fed. Reg. 44565) In that notice, NHTSA placed its recommendations into two categories based on available information and analysis concerning the relative level of stringency and benefits of U.S. and foreign standards. The first category, the ''Priority Recommendations,'' included some foreign standards or aspects of those standards that may represent best safety practices among existing national and regional regulations and that may lead to the improvement of vehicle safety in the U.S. NHTSA stated that, in allocating agency resources among the priority recommendation, it will give priority to the recommendations in this category. The second category, the ''Other Recommendations,'' included U.S. standards or aspects of standards that may represent best current safety practices and that may lead to improvement of vehicle safety worldwide. NHTSA believes that the standards in this category should obtain international review and feedback and be considered in the establishment of global technical regulations under the 1998 Global Agreement.

In addition to the above mentioned categories, the notice also noted the suggestions that had been received by the United Nations' Economic Commission for Europe World Forum for Development of Global Technical Regulations (WP.29) from the governments of Japan and the Russian Federation and various industry and consumer groups. These suggestions are posted in the NHTSA docket (NHTSA–00–7638).

In response to NHTSA's request for suggestions for changes to its preliminary recommendations, the agency received comments from Advocates for Highway and Auto Safety, the Alliance of Automobile Manufacturers, Flat Glass Manufacturers Association of Japan, Honda, the International Organization of Motor Vehicle Manufacturers (OICA), the Rubber Manufacturers Association, and Toyota.

II. NHTSA's Final Recommendations to WP.29

A. Consideration of Comments

NHTSA has reviewed the comments submitted in response to the July 2000 notice. In addition, NHTSA has

[1] The covered equipment and parts inside, but are not limited to, exhaust systems, tires, engines, acoustic shields, anti-theft alarms, warning devices and child restraint systems.

reviewed the suggestions that had been submitted by the governments of Japan and the Russian Federation and various industry and consumer groups to WP.29. These suggestions have been placed in the docket for the request for comments (NHTSA–00–7638).

The majority of those who commented on NHTSA's approach to priority setting indicated that they support NHTSA's approach in principle, but believe that modifications are needed. The reasons for these modifications included: (1) The need to continue work on standards for which resources already have been expended and considerable progress has been made; (2) the need to select regulations that are easier to harmonize from both the technical and the political points of view; (3) the need to include regulations that have been harmonized between Europe and Japan (under the 1958 Agreement); (4) cost-savings to industry and consumers; (5) the list of specific standards under each category is not comprehensive or includes subjects that ought to be removed because of the lack of a clear association with the category; and (6) harmonizing specific aspects of standards is not sufficient.

In response to the comments, NHTSA wishes to clarify its approach to priority setting. NHTSA's statutory mission, and thus the focus of its rulemaking activities, is improving vehicle safety. Accordingly, NHTSA must continue to focus its resources on those standards that improve motor vehicle safety in the U.S.

However, the agency also devotes considerable effort to refining and updating its standards to permit technological innovation, avoid imposing unnecessary regulatory burdens, and improve regulatory effectiveness. Accordingly, NHTSA recognizes the merit in including other standards in the work of WP.29. NHTSA agrees that consideration should be given to including some standards based on the fact that harmonization work is already underway and progress has been made on them. NHTSA itself has already spent considerable resources on some of these standards. With the expenditure of limited additional resources, NHTSA can work with other contracting parties toward their establishment as global technical regulations. NHTSA will also continue to collaborate with other contracting parties to the 1998 Global Agreement on standards of importance to those contracting parties. In addition, NHTSA agrees with including some standards on the basis that it may be easy to harmonize them. NHTSA believes that working on those standards will help the U.S. and other contracting parties gain experience with the process of the 1998 Global Agreement.

B. Recommended Priorities

NHTSA's recommended priorities are largely unchanged. However, NHTSA has decided to reorganize its recommendations according to the subject matter responsibilities of the WP.29 Working Parties of Experts to examine their potential impact on the workload for each of the Working Parties. Upon reviewing its preliminary recommendations and the specific standards that were recommended by other contracting parties, interest groups or commenters for each of the Working Parties of Experts, NHTSA found that the majority of the standards would be assigned to the Working Party on Passive Safety (GRSP). Therefore, in the interest of promoting a manageable workload, the agency has decided to defer some of its recommendations. In addition, based on the considerations discussed above, NHTSA added Motorcycle Brakes to its list of recommendations for the Working Party on Brakes and Running Gear (GRRF).

NHTSA's final recommendations to WP.29 are categorized below according to the Working Parties of Experts. These recommendations focus on standards that NHTSA believes could be productively worked on in the immediate future. NHTSA will continue to work on several long term projects that are currently underway in NHTSA and are also being coordinated in the International Harmonized Research Activities (IHRA). NHTSA will also reevaluate the list set out below on a regular basis to assess whether a revision is merited.

In announcing its final recommendations, NHTSA wants to reaffirm its commitment to achieving the goals of the National Traffic and Motor Vehicle Safety Act. Further, the agency cautions that its recommendations to WP.29 under the 1998 Global Agreement should not be confused with its more inclusive list of rulemaking activities under the Vehicle Safety Act.

NHTSA's final recommendations to be submitted to WP.29 at the March 2001 meeting.

1. *Working Party on Passive Safety*
   - Head restraints
   - Lower anchorages and tethers for child safety seats
   - Door retention components
   - Dummies (10 year old frontal dummy and 50th percentile side impact dummy)
   - Frontal impact (full/offset) protection
2. Working Party on Brakes and Running Gears
   - Tires
   - Motorcycle brakes
3. *Working Party on Lighting and Light-Signaling*
   - Signal lamp visibility
4. *Working Party on General Safety*
   - Windshield wipers and washers
   - Controls and displays
   - Vehicle classification

III. Future Actions

At the March 2001 meeting in Geneva, NHTSA will use its final recommendations in deliberating with the other Contracting Parties to the 1998 Global Agreement about a program of work for the Working Parties of Experts. NHTSA will report to the public on the final outcome of the deliberations after that meeting.

Issued on January 12, 2001.

Rosalyn G. Millman,

Deputy Administrator.

[FR Doc. 01–1527 Filed 1–17–01; 8:45 am]

BILLING CODE 4910–59–P

DEPARTMENT OF TRANSPORTATION

National Highway Traffic Safety Administration

[Docket No. NHTSA–99–6324; Notice 2]

EMB Incorporated; Grant of Application for Temporary Exemption From Federal Motor Vehicle Safety Standards Nos. 108 and 120

This notice grants the application by EMB Incorporated (''EMB'') of Sebastopol, California, for a 2-year exemption from portions of Federal Motor Vehicle Safety Standard Nos. 108 *Lamps, Reflective Devices and Associated Equipment,* and 120 *Tire Selection and Rims for Motor Vehicles Other Than Passenger Cars.* The company does business as Electric Motorbike, Inc., and has petitioned on behalf of its Lectra VR24 motorcycle. In the opinion of the company, a temporary exemption ''would make the development or field evaluation of a low-emission motor vehicle easier and would not unreasonably lower the safety level of that vehicle'' (49 U.S.C. 30113(b)(3)(B)(iii)).

Notice of receipt of the petition was published on July 17, 2000, and an opportunity afforded for comment (65 FR 44092).

The discussion that follows is based on information contained in EMB's application.

Why EMB needs a temporary exemption. The company is developing

zero-emission (electric battery-powered) vehicles. Due to a lack of readily-available components for these vehicles needed to comply with Federal Motor Vehicle Safety Standards Nos. 108 and 120, as explained below, EMB must petition for an exemption from portions of them, until July 1, 2002, as explained below.

EMB's arguments why an exemption would facilitate the development and field evaluation of a low-emission motor vehicle and would not unreasonably degrade the safety of that vehicle. In order to make the company's products available for wider use, EMB believes that a test and development period is necessary to optimize product features and functions. During the development stage, it is likely that several design changes will be made ''to optimize the product for acceptance by the wider public.''

It is important to place a limited number of the product in service in order to gain insights into the features, functions and operating characteristics of the product.

In order to do so, the petitioner requested the following temporary exemptions:

1. Standard No. 108

EMB utilizes a 24-volt lighting system which presently creates an incompatibility with available lighting equipment, necessitating a temporary exemption from three requirements of Standard No. 108.

Table IV of Standard No. 108 requires motorcycle turn signal lamps to meet the applicable requirements of SAE Standard J588NOV8 *Turn Signal Lamps.* However, section 5.1.1.7 of Standard No. 108 provides that ''a motorcycle turn signal lamp need meet only one-half of the minimum photometric values specified in Table 1 and Table 3'' of SAE J588NOV84. EMB stated that ''turn signals which operate at this voltage are difficult to locate.'' However, it has found a supplier in Spain ''which offers European-compliant turn signals for 24-volt operation.'' The turn signal unit ''meets European requirements 50R E9.'' EMB believes that the European standard is equivalent to that of section 5.1.1.7, *e.g.,* that an exemption would not unduly degrade the safety of the vehicle.

Table III of Standard No. 108 requires motorcycles to be equipped with turn signal lamps and a turn signal operating unit. Section 5.5.6 requires all vehicles equipped with a turn signal operating unit to have also an illuminated pilot indicator, which will inform the operator when one or more turn signal lamps fails to operate. However, no indication is required if a variable-load turn signal flasher has been installed on a motor vehicle type specified in section 5.5.6. A motorcycle is not one of the vehicle types specified, and the Lectra VR24 incorporates a variable load flasher. As noted above, the company uses a 24-volt DC power source for turn signal lamps. Outage indication is not presently available in 24 volt DC flasher units, therefore, the turn signal indicator on the dashboard will not indicate a failed lamp.

EMB argued that the open nature of the motorcycle makes it ''easy for an operator to check for proper operation of all lights and signals * * .*''

EMB also sought exemption from certain portions of Section 7.9 which specifies headlighting requirements for motorcycles. In pertinent part, EMB wishes to meet the photometric specifications of Figure 32. At the present time, motorcycle headlamps are not available in 24-volt versions, and the company has chosen ''a military vehicle headlamp'' manufactured by ''Wagner Corporation.'' This headlamp ''does meet requirements for passenger car headlighting systems.'' The upper beam of the headlamp meets all requirements for motorcycle headlamp upper beams, and complies with all lower beam test points as well, with the exception of Test Point 2D–3L, where there is a shortfall of 7 percent.

EMB argued that the shortfall does not unreasonably degrade safety because the Lectra VR24 is designed for a cruising speed of 30 mph and the headlamp does meet requirements for this equipment on motor driven cycles.

Finally, the lens of the headlamp will not be marked ''motorcycle'' as required by Section 7.9.5 for a headlamp of the type intended to be used.

During the exemption period, EMB plans to develop a lighting system that fully complies with Standard No. 108.

2. Standard No. 120

Section 5.2 *Rim marking* of Standard No. 120 requires, in pertinent part, that each rim be embossed or debossed with certain specified information. The wheel that EMB has selected was not embossed with the information at time of manufacture but has been subsequently stamped with indelible ink. All the information is present and in the required location. These wheels meet ISO 8644, ISO 8645, and TUV specifications. EMB will work with suppliers to ensure that future rims are properly marked.

EMB's arguments why an exemption would be consistent with the public interest and objectives of motor vehicle safety. EMB ''is developing zero-emission vehicles which are consistent with the goals and desires of society for a cleaner and quieter environment, and reduced reliance on fossil fuels.''

Even with the exemptions requested, EMB argued that the Lectra VR24 exhibits an overall level of safety equivalent to that prescribed by the Federal motor vehicle safety standards.

Agency Response and Decision

We received no public comments on the application.

EMB is eligible for a temporary exemption on the basis on which it has applied because it intends to produce a zero-emission vehicle. The manufacture of zero-emission vehicles is in the public interest, not only for California where EMB is located but also for the rest of the country as well.

In order to grant EMB's application, we must also make findings that an exemption would not unreasonably lower the safety of the Lectra VR24 motorcycle, and that an exemption would be consistent with the objectives of traffic safety.

Unlike other motorcycles, EMB has designed the Lectra VS24 with a 24-volt lighting system. The company does not know whether the turn signal system will comply with the optional performance allowed by Section 5.1.1.7, but has found that the unit will meet an applicable European requirement, which it believes is equivalent to the performance allowed by Section 5.1.1.7. *Does NHTSA, as opposed to the petitioner, believe that it is equivalent, and if so, on what objective basis do we form that belief? Pls look at Appendix B of 553. It addresses how the agency makes equivalency determinations. Pls note that it requires a degree of rigor in making such determinations.* It would seem, therefore, that the Lectra VS24 will have the equivalent of a complying turn signal system, and, if it does not, that it will be sufficiently close to the requirements of Standard No. 108 that the level of safety would not be ''unreasonably'' lower. *On what objective basis do we conclude that it will be sufficiently close?*

Standard No. 108 does not require that a turn signal pilot indicator be provided on vehicles other than motorcycles when the flasher is a variable-load type. The Lectra VS24 uses a variable load turn signal flasher, and no indicator has been provided. It argued that the open nature of the motorcycle makes it easy for an operator to check the proper operation of the signals. Variable load flashers are intended to accommodate vehicles larger than motorcycles that haul other vehicles on which turn signal systems

are installed. Motorcycles were omitted from the exclusion, not for safety reasons, but because there was no reason to include them. We agree with EMB that an operator will have an actual visual indication if the Lectra VS24's system is not working. We find no safety impact under these circumstances.

The headlamp EMB has chosen is one for military vehicles. It fails to meet one photometric test point, with a shortfall of 7 percent. In addition, the lens is not marked ''motorcycle.'' EMB argues that this does not unreasonably degrade safety because the Lectra VS24 is designed for a cruising speed of 30 mph and its headlamp will meet the requirement for headlamps on motor driven cycles.

We do not find this argument appropriate. The exceptions that Standard No. 108 makes for lighting equipment on motor driven cycles with a maximum speed of 30 mph are only for turn signals and stop lamps (see section 5.1.1.21 and section 5.1.1.22). While a shortfall of 7 per cent is a failure, it occurs at only one test point on the lower beam. Even if this is assumed to represent a lowering of the safety of the vehicle, the effect would be minimal and not ''unreasonable.'' The presence of the word ''motorcycle'' on the headlamp lens is intended to advise prospective purchasers of replacement headlamps that the headlamp has not been designed for use on vehicles other than motorcycles. Since the petition has not been filed by the manufacturer of the headlamp and does not relate to the aftermarket, the noncompliance is of a technical nature only.

With respect to Standard No. 120, the required rim markings are present, but they have been stamped in indelible ink rather than being embossed or debossed. While the intent of the standard is to provide permanent marking for the rims, stamping in indelible ink ought to be an acceptable equivalent. *Does that mean we would grant an inconsequentiality request for rims marked with ink instead of embossed or debossed?* We note that future rims will be properly marked.

The exemptions from these requirements are minor, and hence, compatible with the safety mission of the agency.

On the basis of the foregoing, we find that a temporary exemption would make the development and field evaluation of a low-emission motor vehicle easier and would not unreasonably lower the safety level of that vehicle. We also find that a temporary exemption would be in the public interest and consistent with the objectives of motor vehicle safety. Accordingly, EMB Incorporated is granted NHTSA Temporary Exemption No. EX2000–4 from section 5.1.1.7 and section 7.9 of 49 CFR 571.108 Standard No. 108, *Lamps, Reflective Devices and Associated Equipment,* and from that portion of section 5.2 of 49 CFR 571.120 Standard No. 120, *Tire Selection and Rims for Motor Vehicles Other Than Passenger Cars* which requires marking ''in lettering not less than 3 millimeters high, impressed to a depth or, at the option of the manufacturer, embossed to e height of not less than 0.125 millimeters.'' The exemption shall expire July 1, 2002.

Authority: 49 U.S.C. 30113; delegations of authority at 49 CFR 1.50 and 501.4.

Issued on: January 11, 2001.

Rosalyn G. Millman,

Deputy Administrator.

[FR Doc. 01–1526 Filed 1–17–01; 8:45 am]

BILLING CODE 4910–59–U

DEPARTMENT OF TRANSPORTATION

Research and Special Programs Administration

[Docket No. RSPA–01–8587; Notice No. 01–01]

Hazardous Materials Safety Advisory: Unauthorized Marking of Compressed Gas Cylinders

AGENCY: Research and Special Programs Administration (RSPA), DOT.

ACTION: Safety Advisory Notice.

SUMMARY: This is to notify the public that RSPA is investigating the apparent unauthorized and improper marking of high-pressure compressed gas cylinders by FESS, Inc. d/b/a Fire Extinguisher Service and Sales, 3303 Superior Avenue, Cleveland, Ohio, during the period 1995 to the present. Those cylinders may pose a safety risk to the public. Under no circumstances should a cylinder described in this safety advisory be filled, refilled or used for any purpose other than scrap until it is reinspected and retested by a DOT-authorized retest facility.

RSPA requires that compressed gas cylinders undergo a visual reinspection and a hydrostatic retest on a periodic basis, in accordance with the Hazardous Materials Regulations (HMR), in order to verify that a cylinder has the structural integrity for continued use. If the required visual reinspection and hydrostatic retest are not performed properly, a cylinder with compromised structural integrity may fail (leak or burst) in continued service, when it should have been condemned. Serious personal injury, death, and property damage could result from rupture of a cylinder. Cylinders that have not been retested in accordance with the HMR may not be charged or filled with a hazardous material (compressed gas).

FOR FURTHER INFORMATION CONTACT: Guadalupe ''Lupe'' Castellanos, Hazardous Materials Enforcement Specialist, Central Region, Office of Hazardous Materials Enforcement, Research and Special Programs Administration, US Department of Transportation, 2350 East Devon Avenue, Des Plaines, Illinois 60018. Telephone: (847) 294–8580; Fax: (847) 294–8590.

SUPPLEMENTARY INFORMATION: Until March 19, 1998, FESS held a retester identification number (RIN) issued by RSPA, authorizing FESS to requalify DOT and ICC specification compressed gas cylinders for continued use in accordance with the requirements in 49 CFR 173.34(e) of the HMR for performing a periodic visual inspection and hydrostatic retest. In its most recent application for renewal of its RIN, FESS stated that it reinspected and retested approximately 800 DOT specification 3A, 3AA, and 3AL cylinders each year. When used as fire extinguishers, the retest period for these cylinders can be as long as 12 years. 49 CFR 173.34(e)(19)(ii).

During a recent inspection at FESS's facility in Cleveland, Ohio, RSPA determined that FESS had marked an undetermined number of cylinders after its RIN expired on March 19, 1998. RSPA also concluded that FESS had marked many cylinders, both before and after that date, which may not have been properly reinspected and retested. It appeared to RSPA's inspector that FESS was not able to assure that its hydrostatic retest equipment was accurate to the required degree, based on its failure to have documentation showing the test pressures and readings for its calibrated cylinder and based on the condition of its retest apparatus and calibrated cylinder at the time of the inspection. FESS acknowledged that it customarily marked cylinders before inspecting and testing them, and its test records were incomplete in a number of regards, including lack of entries for certain cylinders observed during RSPA's inspection; the dates on which cylinders were purportedly reinspected and retested; and the initial retest attempt when a cylinder was retested a second time due to equipment failure on the first retest attempt. In addition, FESS did not have the current version of the requirements for requalification of compressed gas cylinders in 49 CFR

173.34(e), and it did not hold pamphlets published by the Compressed Gas Association and incorporated by reference in the HMR that apply to its operations.

The current owner stated that he had assumed control of FESS during 1995. Because there has not been an inspection by an independent inspection agency since that date and FESS failed to renew its RIN when it expired, the matters discovered during RSPA's recent inspection raise questions as to the condition of any cylinder marked by FESS with a test date/year of ''95'' or later. These cylinders are marked with FESS's RIN number B404, bracketed by the month and year of the purported reinspection and retest date, in the following pattern:

B 4
Month Year
4 0

Any person holding a compressed gas cylinder that is marked as having been last inspected and retested by FESS since 1995 should not charge or fill the cylinder without first having it inspected and retested by a cylinder requalification facility holding a currently effective RIN. Any filled cylinder that is marked as having been last inspected and retested by FESS since 1995 should be properly and safely evacuated and purged (a cylinder filled with an atmospheric gas may be vented), and taken to a DOT-authorized cylinder retest facility for visual reinspection and hydrostatic retest to determine if it qualifies for continued use in accordance with the HMR. Under no circumstances should a cylinder described in this safety advisory be filled, refilled or used for any purpose other than scrap until it is reinspected and retested by a DOT-authorized retest facility.

Cylinder requalification facilities holding a currently effective RIN are listed on the internet web site of RSPA's Office of Hazardous Materials Safety, at

''http://hazmat.dot.gov/files/approvals/hydro/hydro_retesters.htm''.

Persons finding or possessing cylinders described in this safety notice may contact Ms. Guadalupe Castellanos for additional information.

Issued in Washington, D.C. on January 11, 2001.

Robert A. McGuire,

Associate Administrator for Hazardous Materials Safety.

[FR Doc. 01–1553 Filed 1–17–01; 8:45 am]

BILLING CODE 4910–60–P

DEPARTMENT OF THE TREASURY

Internal Revenue Service

Proposed Collection; Comment Request for Form 8610 and Schedule A (Form 8610)

AGENCY: Internal Revenue Service (IRS), Treasury.

ACTION: Notice and request for comments.

SUMMARY: The Department of the Treasury, as part of its continuing effort to reduce paperwork and respondent burden, invites the general public and other Federal agencies to take this opportunity to comment on proposed and/or continuing information collections, as required by the Paperwork Reduction Act of 1995, Public Law 104–13 (44 U.S.C. 3506(c)(2)(A)). Currently, the IRS is soliciting comments concerning Form 8610, Annual Low-Income Housing Credit Agencies Report, and Schedule A (Form 8610), Carryover Allocation of Low-Income Housing Credit.

DATES: Written comments should be received on or before March, 19, 2001 to be assured of consideration.

ADDRESSES: Direct all written comments to Garrick R. Shear, Internal Revenue Service, room 5244, 1111 Constitution Avenue NW., Washington, DC 20224.

FOR FURTHER INFORMATION CONTACT: Requests for additional information or copies of the forms and instructions should be directed to Carol Savage, (202) 622–3945, Internal Revenue Service, room 5242, 1111 Constitution Avenue NW., Washington, DC 20224.

SUPPLEMENTARY INFORMATION:

Title: Form 8610, Annual Low-Income Housing Credit Agencies Report, and Schedule A (Form 8610), Carryover Allocation of Low-Income Housing Credit.

OMB Number: 1545–0990.

Form Number: Form 8610 and Schedule A (Form 8610).

Abstract: State housing credit agencies (Agencies) are required by Code section 42(l)(3) to report annually the amount of low-income housing credits that they allocated to qualified buildings during the year. Agencies report the amount allocated to the building owners and to the IRS in Part I of Form 8609. Carryover allocations are reported to the Agencies in carryover allocation documents. The Agencies report the carryover allocations to the IRS on Schedule A (Form 8610). Form 8610 is a transmittal and reconciliation document for Forms 8609, Schedule A (Form 8610), binding agreements, and election statements.

Current Actions: There are no changes being made to the forms at this time.

Type of Review: Extension of a currently approved collection.

Affected Public: State, local or tribal governments.

Estimated Number of Respondents: 53.

Estimated Time Per Respondent: 112 hours, 28 minutes.

Estimated Total Annual Burden Hours: 5,961.

The following paragraph applies to all of the collections of information covered by this notice:

An agency may not conduct or sponsor, and a person is not required to respond to, a collection of information unless the collection of information displays a valid OMB control number. Books or records relating to a collection of information must be retained as long as their contents may become material in the administration of any internal revenue law. Generally, tax returns and tax return information are confidential, as required by 26 U.S.C. 6103.

Request for Comments: Comments submitted in response to this notice will be summarized and/or included in the request for OMB approval. All comments will become a matter of public record. Comments are invited on: (a) Whether the collection of information is necessary for the proper performance of the functions of the agency, including whether the information shall have practical utility; (b) the accuracy of the agency's estimate of the burden of the collection of information; (c) ways to enhance the quality, utility, and clarity of the information to be collected; (d) ways to minimize the burden of the collection of information on respondents, including through the use of automated collection techniques or other forms of information technology; and (e) estimates of capital or start-up costs and costs of operation, maintenance, and purchase of services to provide information.

Approved: January 8, 2001.

Garrick R. Shear,

IRS Reports Clearance Officer.

[FR Doc. 01–1510 Filed 1–17–01; 8:45 am]

BILLING CODE 4830–01–U

DEPARTMENT OF THE TREASURY

Internal Revenue Service

Proposed Collection; Comment Request for Publication 1075

AGENCY: Internal Revenue Service (IRS), Treasury.

ACTION: Notice and request for comments.

SUMMARY: The Department of the Treasury, as part of its continuing effort to reduce paperwork and respondent burden, invites the general public and other Federal agencies to take this opportunity to comment on proposed and/or continuing information collections, as required by the Paperwork Reduction Act of 1995, Public Law 104–13 (44 U.S.C. 3506(c)(2)(A)). Currently, the IRS is soliciting comments concerning Publication 1075, Tax Information Security Guidelines for Federal, State, and Local Agencies.

DATES: Written comments should be received on or before March 19, 2001 to be assured of consideration.

ADDRESSES: Direct all written comments to Garrick R. Shear, Internal Revenue Service, room 5244, 1111 Constitution Avenue NW., Washington, DC 20224.

FOR FURTHER INFORMATION CONTACT: Requests for additional information or copies of the publication should be directed to Faye Bruce, (202) 622–6665, Internal Revenue Service, room 5244, 1111 Constitution Avenue NW., Washington, DC 20224.

SUPPLEMENTARY INFORMATION:

Title: Tax Information Security Guidelines for Federal, State, and Local Agencies.

OMB Number: 1545–0962.

Form Number: Publication 1075.

Abstract: Section 6103(p) of the Internal Revenue Code requires the Internal Revenue Service to provide periodic reports to Congress describing safeguard procedures utilized by agencies which receive information from the IRS to protect the confidentially of the information. This Code section also requires that these agencies furnish reports to the IRS describing their safeguards.

Current Actions: There are no changes being made to Publication 1075 at this time.

Type of Review: Extension of a currently approved collection.

Affected Public: Business or other for-profit organizations, not-for-profit institutions, and Federal, state, local, or tribal governments.

Estimated Number of Respondents: 5,100.

Estimated Time Per Respondent: 40 hours.

Estimated Total Annual Burden Hours: 204,000.

The following paragraph applies to all of the collections of information covered by this notice:

An agency may not conduct or sponsor, and a person is not required to respond to, a collection of information unless the collection of information displays a valid OMB control number. Books or records relating to a collection of information must be retained as long as their contents may become material in the administration of any internal revenue law. Generally, tax returns and tax return information are confidential, as required by 26 U.S.C. 6103.

Request for Comments: Comments submitted in response to this notice will be summarized and/or included in the request for OMB approval. All comments will become a matter of public record. Comments are invited on: (a) Whether the collection of information is necessary for the proper performance of the functions of the agency, including whether the information shall have practical utility; (b) the accuracy of the agency's estimate of the burden of the collection of information; (c) ways to enhance the quality, utility, and clarity of the information to be collected; (d) ways to minimize the burden of the collection of information on respondents, including through the use of automated collection techniques or other forms of information technology; and (e) estimates of capital or start-up costs and costs of operation, maintenance, and purchase of services to provide information.

Approved: January 9, 2001.

Garrick R. Shear,

IRS Reports Clearance Officer.

[FR Doc. 01–1511 Filed 1–17–01; 8:45 am]

BILLING CODE 4830–01–U

Federal Register

Thursday,
January 18, 2001

Part II

Department of Transportation

Federal Transit Administration

FTA Fiscal Year 2001 Apportionments, Allocations and Program Information; Notice

DEPARTMENT OF TRANSPORTATION

Federal Transit Administration

FTA Fiscal Year 2001 Apportionments, Allocations and Program Information

AGENCY: Federal Transit Administration (FTA), DOT.

ACTION: Notice.

SUMMARY: The Department of Transportation (DOT) and Related Agencies Appropriations Act for Fiscal Year 2001 (FY 2001 DOT Appropriations Act) (Pub. L. 106–346) was signed into law by President Clinton on October 23, 2000, and provides FY 2001 appropriations for the Federal Transit Administration (FTA) transit assistance programs. Based upon this Act, and the Transportation Equity Act for the 21st Century (TEA–21), on November 3, 2000, FTA published, on its website, a list of apportionments and allocations for transit programs—excluding the FY 2001 Bus allocations for the Section 5309 Capital Investment Program. Publication of the ''FTA Fiscal Year 2001 Apportionments, Allocations and Program Information Notice'' in the **Federal Register** was delayed pending the completion of the appropriation process by Congress.

The FY 2001 Omnibus Consolidated Appropriations Act (Pub. L. 106–554), which was signed by the President on December 21, 2000, contains provisions that impact the level of funding made available to FTA in the FY 2001 DOT Appropriations Act and cause the FY 2001 apportionments and allocations previously published on the website to change. More specifically, the FY 2001 Omnibus Consolidated Appropriations Act contain the following provisions relative to FTA programs in this fiscal year: (1) Section 1403(a) Government-Wide Rescission, which rescinds an amount equal to .22 percent of the discretionary budget authority is to be applied to programs, projects, and activities; (2) Section 1108, which directs that funding for the Clean Fuels Formula Grant program under 49 U.S.C. 5309(m)(3)(C) does not apply to funds made available in the FY 2001 DOT Appropriations Act; and (3) Sections 1105, 1107, and 1123, which appropriate from the Mass Transit Account of the Highway Trust Fund, $1,000,000 for Southeast Light Rail Extension Project, in Dallas, TX, $3,000,000 for the Newark-Elizabeth rail link project in New Jersey, and $500,000 for Alabama A&M University buses and bus facilities, respectively.

This notice includes the apportionment of FY 2001 funds made available in the FY 2001 DOT Appropriations Act—adjusted in accordance with the applicable provisions of the FY 2001 Omnibus Consolidated Appropriations Act—for the: Metropolitan Planning Program and State Planning and Research Program; Urbanized Area Formula Program; Nonurbanized Area Formula Program; Rural Transit Assistance Program; Elderly and Persons with Disabilities Program; and the Capital Investment Program for Fixed Guideway Modernization. This notice also contains the adjusted allocations for the New Starts and Bus categories under the Capital Investment Program and the Job Access and Reverse Commute Program. It contains general information about other programs established under TEA–21, including the Over-the-Road Bus Accessibility Program and the Clean Fuels Formula Program.

Information regarding TEA–21 funding authorization levels for use in developing Metropolitan Transportation Improvement Programs (TIPs) and Statewide Transportation Improvement Programs (STIPs) is included. For informational purposes, the notice contains the estimated apportionment of FY 2001 funds for the Federal Highway Administration (FHWA) Metropolitan Planning Program and the estimated apportionment of FY 2001 funds for the FHWA State Planning and Research Program.

Listings of prior year unobligated allocations for the section 5309 New Starts and Bus Programs are included, as in previous years. In addition, the FTA policy regarding pre-award authority to incur project costs and the Letter of No Prejudice Policy are provided. Other pertinent program information is also included.

FOR FURTHER INFORMATION CONTACT: The appropriate FTA Regional Administrator for grant-specific information and issues; Patricia Levine, Director, Office of Resource Management and State Programs, (202) 366–2053, for general information about the Urbanized Area Formula Program, the Nonurbanized Area Formula Program, the Rural Transit Assistance Program, the Elderly and Persons with Disabilities Program, the Clean Fuels Formula Program, the Over-the-Road Bus Accessibility Program, or the Capital Investment Program; or Paul L. Verchinski, Chief, Statewide and Intermodal Planning Division, (202)366–1626, for general information concerning the Metropolitan Planning Program and the State Planning and Research Program; or Dr. Lewis P. Clopton, Director, Office of Research Management, (202)366–9157, for information about the Job Access and Reverse Commute Program.

SUPPLEMENTARY INFORMATION:

Table of Contents

I. Background
II. Overview
  A. Fiscal Year 2001 Appropriations
  B. TEA–21 Authorized Program Levels
  C. Project Management Oversight
  D. 2002 Winter Olympic Games
III. Fiscal Year 2001 Focus Areas
  A. Urbanized Area Formula Study
  B. National Transit Database Redesign
  C. New Starts Roundtable
  D. Intelligent Transportation Systems
IV. Section 5303 Metropolitan Planning Program and Section 5313(b) State Planning and Research Program
  A. Metropolitan Planning Program
  B. State Planning and Research Program
  C. Data Used for Metropolitan Planning and State Planning and Research Apportionments
  D. FHWA Metropolitan Planning Program and State Planning and Research Program
  E. Local Match Waiver for Specified Planning Activities
  F. Planning Emphasis Areas for Fiscal Year 2001
  G. Federal Planning Certification Reviews
  H. Consolidated Planning Grants
  I. New Starts Approval to Enter Preliminary Engineering and Final Design
V. Section 5307 Urbanized Area Formula Program
  A. Total Urbanized Area Formula Apportionments
  B. Fiscal Year 2000 Apportionment Adjustments
  C. Data Used for Urbanized Area Formula Apportionments
  D. Urbanized Area Formula Apportionments to Governors
  E. Transit Enhancements
  F. Fiscal Year 2001 Operating Assistance
  G. Unobligated Funds for Operating Assistance
  H. Designated Transportation Management Areas
  I. Urbanized Area Formula Funds Used for Highway Purposes
  J. National Transit Database Internet Reporting
VI. Section 5311 Nonurbanized Area Formula Program and Section 5311(b) Rural Transit Assistance Program (RTAP)
  A. Nonurbanized Area Formula Program
  B. Rural Transit Assistance Program (RTAP)
VII. Section 5310 Elderly and Persons With Disabilities Program
VIII. FHWA Surface Transportation Program and Congestion Mitigation and Air Quality Funds Used for Transit Purposes (Title 23, U.S.C.)
  A. Transfer Process
  B. Matching Share for FHWA Transfers
IX. Section 5309 CapitaL Investment Program
  A. Fixed Guideway Modernization
  B. New Starts
  C. Bus

X. Job Access and Reverse Commute Program—Section 3037 oF TEA–21
XI. Over-The-Road Bus Accessibility Program—Section 3038 of TEA–21
XII. Section 5308 Clean Fuels Formula Program
XIII. Unit Values of Data for Section 5307 Urbanized Area Formula Program, Section 5311 Nonurbanized Area Formula Program, and Section 5309 Fixed Guideway Modernization Program
XIV. Period of Availability of Funds
XV. Automatic Pre-Award Authority to Incur Project Costs
A. Policy
B. Conditions
C. Environmental, Planning, and Other Federal Requirements
D. Pre-award Authority for New Starts Projects Approved for Preliminary Engineering and/or Final Design
XVI. Letter of No Prejudice Policy (Prior Approval of Pre-Award Authority)
A. Policy
B. Conditions
C. Environmental, Planning, and Other Federal Requirements
D. Request for LONP
XVII. FTA Homepage on the Internet
XVIII. FTA Fiscal Year 2001 Annual List of Certifications and Assurances
XIX. Grant Application Procedures Tables
1. FTA Revised FY 2001 Appropriations for Grant Programs
2. FTA Revised FY 2001 Section 5303 Metropolitan Planning Program and Section 5313(b) State Planning and Research Program Apportionments
3. FHWA FY 2001 Estimated Metropolitan Planning (PL) Program and Estimated State Planning and Research Program (SPRP) Apportionments
4. FTA Revised FY 2001 Section 5307 Urbanized Area Formula Apportionments
5. FTA Revised FY 2001 Section 5311 Nonurbanized Area Formula Apportionments, and Section 5311(b) Rural Transit Assistance Program (RTAP) Allocations
6. FTA Revised FY 2001 Section 5310 Elderly and Persons With Disabilities Apportionments
7. FTA Revised FY 2001 Section 5309 Fixed Guideway Modernization Apportionments
8. FTA Revised FY 2001 Section 5309 New Starts Allocations
8A. FTA Prior Year Unobligated Section 5309 New Starts Allocations
9. FTA FY 2001 Section 5309 Bus Allocations
9A. FTA Prior Year Unobligated Section 5309 Bus Allocations
10. FTA Revised FY 2001 Job Access and Reverse Commute Program Allocations
11. FTA TEA–21 Authorization Levels (Guaranteed Funding Only)
11A. FTA TEA–21 Authorization Levels (Guaranteed and Non-Guaranteed Funding)
12. FTA FY 2001 Apportionment Formula for Section 5307 Urbanized Area Formula Program
13. FTA FY 1998–2003 Section 5309 Fixed Guideway Modernization Program Apportionment Formula
14. FTA Revised FY 2001 Formula Grant Apportionments Unit Values of Data

I. Background

Metropolitan Planning funds are apportioned by statutory formula to the Governors for allocation to Metropolitan Planning Organizations (MPOs) in urbanized areas or portions thereof to provide funds for their Unified Planning Work Programs. State Planning and Research funds are apportioned to states by statutory formula to provide funds for their State Planning and Research Programs. Urbanized Area Formula Program funds are apportioned by statutory formula to urbanized areas and to Governors to provide capital, operating and planning assistance in urbanized areas. Nonurbanized Area Formula Program funds are apportioned by statutory formula to Governors for capital, operating and administrative assistance in nonurbanized areas. Elderly and Persons with Disabilities Program funds are apportioned by statutory formula to Governors to provide capital assistance to organizations providing transportation service for the elderly and persons with disabilities. Fixed Guideway Modernization funds are apportioned by statutory formula to specified urbanized areas for capital improvements in rail and other fixed guideways. New Starts and Bus allocations identified in the FY 2001 DOT Appropriations Act or the Conference Report accompanying the FY 2001 DOT Appropriations Act are included in this notice. FTA will honor those allocations included in report language provided that the projects meet the statutory intent of the specific program.

II. Overview

A. Fiscal Year 2001 Appropriations

The FY 2001 DOT Appropriations Act made $6,271,000,000 available for FTA programs, which is the guaranteed funding level under TEA–21. After the .22 percent reduction for the government-wide rescission and addition of new funding (as directed in the FY 2001 Omnibus Consolidated Appropriations Act), and transfer of funds to the Office of the Inspector General (OIG) as directed in the FY 2001 DOT Appropriations Act, FTA's FY 2001 appropriation is $6,260,696,100. The revised/adjusted FY 2001 funding amounts for FTA programs are displayed in Table 1.

The following text provides a narrative explanation of the funding levels and other factors affecting the apportionments and allocations.

B. TEA–21 Authorized Program Levels

TEA–21 provides a combination of trust and general fund authorizations that total $7,274,000,000 for the FY 2001 FTA program. Of this amount, $6,271,000,000 was guaranteed under the discretionary spending cap and made available in the FY 2001 DOT Appropriations Act. Adjustments directed by the FY 2001 Omnibus Consolidated Appropriations Act reduce funding for FTA programs to $6,260,696,100 for FY 2001. See Table 11 for fiscal years 1998–2003 guaranteed funding levels by program and Table 11A for the total of guaranteed and non-guaranteed levels by program.

Information regarding estimates of the funding levels for 1999–2003 by state and urbanized area is available on the FTA website. The numbers are for planning purposes only as they will be revised in the future but may be used for programming Metropolitan Transportation Improvement Programs and Statewide Transportation Improvement Programs.

C. Project Management Oversight

Section 5327 of Title 49 U.S.C. allows the Secretary of Transportation to use not more than one-half percent of the funds made available under the Urbanized Area Formula Program and the Nonurbanized Area Formula Program, and three-quarters percent of funds made available under the Capital Investment Program to contract with any person to oversee the construction of any major project under these statutory programs to conduct safety, procurement, management and financial reviews and audits, and to provide technical assistance to correct deficiencies identified in compliance reviews and audits. Therefore, one-half percent of the funds appropriated for the Urbanized Area Formula Program and the Nonurbanized Area Formula Program for FY 2001, and three-quarters percent of Capital Investment Program funds were reserved for these purposes before funds were apportioned.

D. 2002 Winter Olympic Games

The FY 2001 DOT Appropriations Act made $60,000,000 available from the formula grants program for the 2002 Winter Olympic Games. After applying a .22 percent reduction, in accordance with the government-wide rescission required by the FY 2001 Omnibus Consolidated Appropriations Act, $59,868,000 is available for this activity. The funds shall be available for grants for the costs of planning, delivery and temporary use of transit vehicles for special transportation needs and

construction of temporary transportation facilities for the XIX Winter Olympiad and the VIII Paralympiad for the Disabled, to be held in Salt Lake City, Utah.

III. Fiscal Year 2001 Focus Areas

A. Urbanized Area Formula Study

Section 3033 of TEA–21 requires the Secretary of Transportation to conduct a study of FTA's Urbanized Area Formula Program (49 U.S.C. 5307) and the needs of small urbanized areas with unusually high levels of transit service. On September 29, 2000, the Secretary of Transportation approved ''The Urbanized Area Formula Program and the Needs for Small Intensive Cities'', which reports the result of the study. The report concludes that sufficient issues exist suggesting that changes to the existing Urbanized Area Formula Grants Program should be considered as part of the FY 2004 and beyond reauthorization cycle. However, the formula apportionments should continue to reflect underlying transit needs. For further information contact Richard Steinmann, FTA Office of Policy Development, at (202) 366–4050.

B. National Transit Database Redesign

There have been major changes in federal reporting requirements affecting FTA. Most notable among these is prompt reporting of certain National Transit Database (NTD) data under the Government Performance and Results Act, and an increase in the level of detail. In addition, FTA must respond to congressional direction for new safety data reporting. These factors, along with other significant considerations and concerns, served as the impetus to redesign the NTD.

In the Spring of 2000, FTA conducted an outreach effort to the transit industry and then prepared a report to Congress entitled, ''Review of the National Transit Database'' (May 31, 2000), which evaluates the NTD reporting system. The report suggests a number of changes that will enhance the usefulness of the NTD while minimizing reporting burden. The report is available on the FTA website.

Presently, FTA is in the process of redesigning the data requirements of the NTD, which is expected to be completed by the Spring of 2001. System reprogramming and database testing will precede final implementation, which will take place during the Spring of 2002.

C. New Starts Roundtable

In FY 2000, FTA sponsored a series of New Starts Roundtable (NSR) meetings. The purpose of the NSR is to facilitate continued dialogue and information sharing between FTA and local sponsors of projects pursuing Capital Investment Program (section 5309) New Starts funding. This includes projects currently in FTA's New Starts pipeline or a study that may result in the selection of a major fixed guideway transit investment in the near future.

The NSR provides a forum for FTA and the New Starts community to jointly explore and address issues related to the New Starts planning, project development, and evaluation processes. The NSR Steering Committee, a partnership whose membership is comprised of the FTA Administrator, FTA staff and representatives from local transit agencies is responsible for outlining the strategy, developing topic areas and agendas and selecting sites and setting schedules for NSR meetings, in addition to implementing the NSR workplan activities.

The targeted participants for NSR meetings include planning directors or project/study managers who can share their views of the New Starts criteria and project development process. In FY 2000, two roundtable meetings were held: July 27th–28th, in Washington, DC; and August 2nd–3rd, in Las Vegas, NV. FTA is in the process of organizing NSR meetings for FY 2001. For additional information regarding this initiative, contact David Vozzolo or Tonya Holland, FTA Office of Planning Innovation and Analysis, at (202) 366–4033.

D. Intelligent Transportation Systems (ITS)

Section 5206(e) of TEA–21 requires that Intelligent Transportation Systems (ITS) projects using funds from the Highway Trust Fund (including the Mass Transit Account) conform to National ITS Architecture and Standards. Interim guidance on conformity with National ITS Performance Standards was issued October 2, 1998, jointly by FTA and FHWA. This document provides guidance for meeting this provision of TEA–21 and is available from FTA regional offices and on the FTA website. These standards and requirements apply to FY 2001 allocations included in this notice that contain ITS components. Using existing FTA oversight procedures, FTA has initiated a program to provide initial oversight and technical assistance with respect to National ITS Architecture Consistency requirements.

Questions regarding the applicability of these standards and requirements should be addressed to the FTA Regional Office or Ronald Boenau, FTA Office of Research, Demonstration and Innovation, at (202) 366–0195.

IV. Section 5303 Metropolitan Planning Program and Section 5313(b) State Planning and Research Program

A. Metropolitan Planning Program

Funding made available for the Metropolitan Planning Program in the FY 2001 DOT Appropriations Act was $52,113,600—the guaranteed funding level under TEA–21. This amount has been reduced to $51,998,950 after application of the .22 percent reduction for the government-wide rescission required by the FY 2001 Omnibus Consolidated Appropriations Act.

The FY 2001 Metropolitan Planning Program apportionment to states for MPOs' use in urbanized areas totals $52,278,930. This amount includes $51,998,950 in FY 2001 funds, and $279,980 in prior year deobligated funds available for reapportionment under this program. A basic allocation of 80 percent of this amount ($41,423,144) is distributed to the states based on the state's urbanized area population as defined by the U.S. Census Bureau for subsequent state distribution to each urbanized area, or parts thereof, within each state. A supplemental allocation of the remaining 20 percent ($10,455,786) is also provided to the states based on an FTA administrative formula to address planning needs in the larger, more complex urbanized areas. Table 2 contains the final state apportionments for the combined basic and supplemental allocations. Each state, in cooperation with the MPOs, must develop an allocation formula for the combined apportionment, which distributes these funds to MPOs representing urbanized areas, or parts thereof, within the state. This formula, which must be approved by the FTA, must ensure to the maximum extent practicable that no MPO is allocated less than the amount it received by administrative formula under the Metropolitan Planning Program in FY 1991 (minimum MPO allocation). Each state formula must include a provision for the minimum MPO allocation. Where the state and MPOs desire to use a new formula not previously approved by FTA, it must be submitted to the appropriate FTA Regional Office for prior approval.

In FY 2001, the results of the 2000 Census will be made available and the Census Bureau will designate new urbanized areas. Since the statutory formula for distribution of the Metropolitan Planning Program utilizes the latest available decennial census,

FTA anticipates use of the 2000 Census for FY 2002 funding apportionments. This will affect each state's apportionment. In addition, each state has an FTA approved in-state allocation formula to each urbanized area. States will be free to continue using their existing in-state formula distribution. When the Census Bureau issues its population data, FTA will request a state reaffirmation of these in-state formulas since most were last approved in FY 1992. A reaffirmation or new in-state formula should be submitted to the FTA Regional Office for approval prior to October 1, 2001 so that the funding distributions are effective in FY 2002.

Currently, guaranteed and authorized funding levels for each state over the life of TEA–21 (fiscal years 1999–2003) based on the 1990 Census, are posted at [http://www.fta.dot.gov/office/planning/gaf.htm]. By June 2001, FTA will post revised fiscal year 2002 and 2003 guaranteed and authorized funding levels based on the 2000 census for each state at this same website address. This information should be utilized by each state when reaffirming or revising in-state formulas.

B. State Planning and Research Program

Funding made available for the State Planning and Research Program in the FY 2001 DOT Appropriations Act was $10,886,400, the guaranteed funding level under TEA–21. This amount has been reduced to $10,862,450, after applying the .22 percent reduction for the government-wide rescission required by the FY 2001 Omnibus Consolidated Appropriations Act.

The FY 2001 apportionment for the State Planning and Research Program (SPRP) totals $10,938,770. This amount includes $10,862,450 in FY 2001 funds, and $76,320 in prior year deobligated funds, which have become available for reapportionment under this program. Final state apportionments for this program are also contained in Table 2. These funds may be used for a variety of purposes such as planning, technical studies and assistance, demonstrations, management training, and cooperative research. In addition, a state may authorize a portion of these funds to be used to supplement metropolitan planning funds allocated by the state to its urbanized areas, as the state deems appropriate.

C. Data Used for Metropolitan Planning and State Planning and Research Apportionments

Population data from the 1990 Census is used in calculating these apportionments. The Metropolitan Planning funding provided to urbanized areas in each state by administrative formula in FY 1991 was used as a ''hold harmless'' base in calculating funding to each State.

D. FHWA Metropolitan Planning Program and State Planning and Research Program

For informational purposes, the estimated FY 2001 apportionments for the FHWA Metropolitan Planning Program (PL) and estimated apportionments for FY 2001 State Planning and Research Program (SPRP) are contained in Table 3. These estimates include expected SPRP funding increases from the Revenue Budget Aligned Authority authorized in TEA–21, Section 1105. The amounts are as originally provided by FHWA and may be adjusted by that agency to incorporate the .22 percent reduction required by the FY 2001 Omnibus Consolidated Appropriations Act.

E. Local Match Waiver for Specified Planning Activities

Job Access Planning. Federal, state and local welfare reform initiatives may require the development of new and innovative public and other transportation services to ensure that former welfare recipients have adequate mobility for reaching employment opportunities. In recognition of the key role that transportation plays in ensuring the success of welfare-to-work initiatives, FTA and FHWA permit the waiver of the local match requirement for job access planning activities undertaken with Metropolitan Planning Program and State Planning and Research Program funds. FTA and FHWA will support requests for waivers when they are included in Metropolitan Unified Planning Work Programs and State Planning and Research Programs and meet all other appropriate requirements.

F. Planning Emphasis Areas for Fiscal Year 2001

The FTA and FHWA identify Planning Emphasis Areas (PEAs) annually to promote priority themes for consideration, as appropriate, in metropolitan and statewide transportation planning processes. Identification of PEAs calls attention to a national policy emphasis on the themes and priorities within FTA and FHWA for enhanced inventory of current practice, guidance and training in those areas. The FTA and FHWA are committed to providing opportunities to the planning community to exchange ideas and experiences on innovative practice in these topic areas throughout the year. Furthermore, this information will constitute an important component of guidance for implementing the planning and environmental provisions of TEA–21.

To that end, FTA and FHWA intend to periodically develop information that will be made available through publications, on the FTA and FHWA websites, and through other means. As opportunities become available, this information also will be promoted for inclusion on the agendas of regional and national conferences held during the year. To support these efforts, FTA and FHWA encourage planning organizations to expand their work activities on these topics through their planning work activities, as set forth in Unified Planning Work Programs (UPWPs) and State Planning and Research Programs. This will be the resource base and means by which innovative and effective practices can be identified and reported back to the planning community.

For FY 2001, five key planning themes have been identified as PEAs: (1) Mainstreaming safety in the transportation planning and decision-making process; (2) incorporation of environmental streamlining as a policy and planning analysis theme within planning processes; (3) transportation system management and operations; (4) demonstrated compliance with Title VI of the Civil Rights Act and accommodation of the principles of environmental justice; and (5) coordination of non-emergency transportation services.

(1) *Safety in Transportation.* TEA–21 emphasizes the safety of transportation systems as a national priority and calls for transportation plans and strategies that ''increase the safety and security of transportation systems.'' The DOT Strategic Plan identifies safety as the highest priority and includes a goal to ''promote the public health and safety by working toward the elimination of transportation-related deaths, injuries and property damage.''

The DOT short-term objective is to integrate safety considerations into all stages of the transportation planning process, including identification of activities to be considered during the development of UPWPs and SPRPs. States and MPOs are encouraged to consider both long and short-term strategies for inclusion in their plans and transportation improvement programs (TIPs).

FTA and FHWA are working together to advance the state-of-practice in addressing safety in the metropolitan and statewide planning process. In May 2000, FTA and FHWA hosted a meeting along with the Transportation Research

Board (TRB) of safety professionals and planners to address safety in the metropolitan planning process. From that meeting, a TRB report describing the issues and recommendations identified at the meeting will be produced, and is expected to be available on the TRB website in the Fall of 2000 at [*http://www.nas.edu/trb*]. Participants in the TRB meeting summarized the following strategies for addressing safety in planning processes:

- Establish a foundation for safety in planning;
- Improve access to safety data and encourage its use;
- Address safety in the consideration of alternative mode choice options;
- Explicitly address safety in federal and state regulatory policy; and
- Market and advocate safety through ''champions'' to user groups.

These suggested strategies are just a beginning. FTA and FHWA are also working to document good practice and develop guidance in the area of safety planning that will be a tool for both states and MPOs in addressing safety in their planning processes. Through good practice and guidance, MPOs can begin to identify methods to integrate safety within the planning process. These methods may include:

- Providing an umbrella for the coordination of transportation safety activities among various levels of government, the private sector and other specialized transportation safety groups;
- Enhancing the knowledge of local officials and the public on traffic safety; and
- Developing assessment tools for safety based upon existing problems and how proposed projects will decrease problems in a regional context.

(2) *Environmental Streamlining.* TEA–21 reflects the concerns of Congress and the transportation community that the planning and project development processes are requiring too much time before solutions to serious transportation problems are ready for implementation. TEA–21 mandated the elimination of the Major Investment Study as a stand-alone requirement and the streamlining of the process for complying with the National Environmental Policy Act (NEPA) and other environmental statutes and regulations. Developing and guiding projects through the planning and review processes faster, without compromising environmental safeguards, is a complex undertaking for which there is no easy solution.

FHWA and FTA have engaged the federal environmental and permitting agencies in a dialogue on ways to improve the planning and NEPA processes. This dialogue has produced a national Memorandum of Understanding (MOU) on environmental streamlining among the federal agencies, which formalizes their commitment to streamline the environmental review process for federally-funded highway and transit projects, while fulfilling their responsibilities to protect the environment. The MOU calls for early consideration of environmental and community issues during the planning process in consultation with federal and state environmental resource agencies. FHWA followed up on the national MOU by convening regional summits on environmental streamlining. These summits have resulted in a number of regional and statewide MOUs that address more specific linkage between planning and project development. These documents are generally available in the environmental streamlining ''tool kit'' that has been posted on the FHWA website at [http://www.fhwa.dot.gov/environment/strmlng.htm].

FTA and FHWA are establishing environmental streamlining as a PEA to encourage greater effort, innovative approaches, and a national dialogue on using the planning process to advance this objective. Examples of the kinds of innovative planning concepts that might serve to streamline the environmental process under the appropriate conditions include the introduction and use of new technologies such as Geographic Information Systems to study regional environmental issues in support of programmatic approvals, or closer coordination of transportation planning with other planning efforts such as land use planning, air quality planning, or watershed management and associated mitigation banking. Additional streamlining concepts are being explored in a number of states such as Florida, Oregon, and California through pilot projects or pilot programs specifically identified by the State DOTs, MPOs, and transit agencies for this purpose. An expert panel established through the National Cooperative Highway Research Program is monitoring, analyzing, and reporting on the status of the pilot streamlining effort around the country. The results will be added to the streamlining tool kit on the FHWA website mentioned above.

As part of this PEA, FHWA and FTA are seeking not only to demonstrate that earlier consideration of environmental issues during planning makes sense, but also actually to quantify, to the extent possible, the time savings and environmental benefits that result. To that end, a preliminary baseline assessment of processing times has been completed and a more detailed assessment is underway. As additional data becomes available, it too will be posted on the FHWA streamlining website.

(3) *Transportation System Management and Operations.* TEA–21 challenges the FHWA and FTA to move beyond traditional infrastructure-based approaches to improve the movement of people and goods. TEA–21 emphasizes a greater need to improve the way transportation systems are managed and operated. The challenge, in terms of transportation planning, is not only to make a good investment in infrastructure, but also to see that this investment is managed and operated to meet a broad range of customer needs. The FHWA and FTA are establishing management and operations as a PEA to encourage innovation, promote a national dialogue, and advance the state of the practice.

FTA and FHWA recognize that future transportation planning must look beyond the perception that management and operation strategies merely reduce congestion problems or move vehicles faster. The FHWA and FTA are convening a working group to develop recommendations to better integrate transportation operations and planning to address a broad array of transportation issues.

Information is available at website address [http://plan2op.fhwa.dot.gov] to guide and inform transportation planners on effective ways to consider management and operations investments, programs and actions in planning contexts. It provides a document library that may be searched for recent documents that deal with this subject and also presents a forum for the exchange of experiences.

(4) *Transportation Equity and Public Involvement.* Increasingly, concerns for compliance with provisions of Title VI of the Civil Rights Act have been raised by citizens and advocacy groups with regard to broad patterns of transportation investment and impact considered in metropolitan and statewide planning. While Title VI and environmental justice concerns have most often been raised during project development, it is important to recognize that the law applies equally to the processes and products of metropolitan and statewide planning. Public involvement is a major element of this process.

FTA and FHWA are working jointly to develop guidance to support metropolitan areas and states in their efforts to incorporate considerations of transportation equity in their local

planning processes and substantiate Title VI compliance through demonstrated actions. Several releases of resource materials have taken place over the past year, including:

• ''Title VI Environmental Justice Planning Technical Assistance Manual'' with accompanying implementation training;

• brochure and fact sheet to facilitate a better understanding of Title VI/ Environmental Justice considerations in transportation activities; and

• creation of an informational website which can be accessed at [http://*www.fhwa.dot.gov/environment/ej2.htm*].

Case studies and effective practice materials are being prepared for wide distribution, and a companion training and education package is being designed. These will be completed by the end of 2000.

States and Metropolitan Planning Organizations (MPOs) are advised to strengthen their planning processes in this area and to document their effort in two categories of work activity:

(a) Strengthen the focus of public involvement efforts, with special attempts to include the traditionally under-served and under-represented in the planning process; and

(b) assessing the distribution of benefits and adverse environmental impacts at both the plan and project levels.

Over the fiscal year, a range of possible procedural and analytical approaches for complying with provisions of Title VI and the Executive Order on Environmental Justice at the planning stage will be developed and disseminated through guidance and regulation. To support that effort, ''innovative practice'' case study development and training opportunities will be enhanced, based in part on the reported activities and experiences of metropolitan and statewide planning processes in this area.

(1) *Coordination of Non-Emergency Transportation Services.* Experience and research have shown that coordinating program resources for transportation services can lead to increased service availability and more cost-effective transportation services to persons with limited access and special needs. The DOT and the U.S. Department of Health and Human Services (HHS) recognize that there are over 70 federal programs in which some aspect of transportation services is an allowable use of funds. The Departments are jointly developing a coordination resource, the Transportation Coordination Toolkit, to assist states and communities in their efforts to improve access to transportation services for persons with special mobility needs.

The initial piece in the Transportation Coordination Toolkit is a guide to coordinating transportation planning for DOT and HHS. It addresses the information and actions necessary to coordinate the transportation resources of various programs of DOT and HHS. Additional pieces will include case studies, a compilation of federal-funding sources, and a program resource guide. Additional information on these can be found on the website for the Coordinating Council on Access and Mobility at [http://www.ccamweb.org].

G. Federal Planning Certification Reviews

The Intermodal Surface Transportation Efficiency Act (ISTEA) required FTA and FHWA to certify, at least every three years, that the planning processes conducted in the largest metropolitan areas were being carried out in compliance with applicable provisions of federal law. This provision applies specifically to localities termed ''Transportation Management Areas'' (TMA), which are urbanized areas with populations of 200,000 and above, or other urbanized areas that may be designated by the Secretary of Transportation. TEA–21 further required that, in conducting these certification reviews, provisions be made for public involvement appropriate to the metropolitan area under review.

To that end, an annual calendar of prospective dates and locations for certification reviews of TMAs anticipated in FY 2001 has been prepared and is posted on the FTA website at [http://www.fta.dot.gov/library/planning/cert2001.htm].

For further information regarding federal certifications of the planning process contact: for FTA, Charles Goodman, FTA Metropolitan Planning Division, (202) 366–1944, or Scott Biehl, FTA Office of Chief Counsel, (202) 366–4063; for FHWA, Sheldon Edner, FHWA Metropolitan Planning Division, (202) 366–4066, or Reid Alsop, FHWA Office of the Chief Counsel, (202) 366–1371.

H. Consolidated Planning Grants

In FY 1997, FTA and FHWA began offering states the option of participating in a pilot Consolidated Planning Grant (CPG) program. FTA and FHWA have now made CPG a permanent pilot. As part of the permanent pilot, additional state participants are sought so that FTA and FHWA can benefit from the widest possible range of participant input to improve and further streamline the process.

Since the first CPG grant was awarded in April 1997, almost $228 million has been obligated by the pilot states. Of this total, more than $180 million is from FHWA sources. Of the 11 pilot participants, three have used annual grants only; three have a mixture of grant time lengths, starting with annual and switching to multi-year grants or vice versa; and five have used only multi-year grants with the grant period ranging up to three years so far. Under the multi-year approach option, the CPG grant would remain open for a period of years to be determined by the state (and MPO, jointly, for Metropolitan Planning funds) with the approval of the federal government. New apportionments can be added by grant amendment, as funds become available. The annual approach treats the CPG much as FHWA funds are treated currently, that is, as basically annual apportionments with a yearly close-out of project activities and a deobligation and reobligation cycle. Those with the multi-year grants can close them at any time and begin the next year with either a new multi-year grant or an annual grant. The ease with which a state can opt for the single year or the multi-year approach to the CPG grant is just one example of the flexibility intended for the pilot.

Under the CPG, states can report metropolitan planning expenditures (to comply with the Single Audit Act) for both FTA and FHWA under the Catalogue of Federal Domestic Assistance number for FTA's Metropolitan Planning Program. Additionally, for states with an FHWA Metropolitan Planning (PL) fund matching ratio greater than 80 percent, the state (through FTA) can request a waiver of the 20 percent local share requirement in order that all FTA funds used for metropolitan planning in a CPG can be granted at the higher FHWA rate. For some states, this federal match rate can exceed 90 percent. Currently, two western states participating in the pilot are using the FHWA PL match rate.

Pre-award authority has been granted to FTA's planning programs for the life of TEA–21 (through FY 2003). This pre-award authority enables states to continue planning program activities from year to year with the assurance that eligible costs can later be converted to a regularly funded federal project without the need for prior approval or authorization from the granting agency. Beginning in FY 2000, the transfer procedures established to implement the transfer provision in TEA–21 (section 1103(i) ''Transfer of Highway and Transit Funds'') is applicable to

FHWA funds used in CPG. For planning projects funded through CPG, the state DOT requests the transfer of funds in a letter to the FHWA Division Office. The FHWA-funded planning activities must be in accordance with the state's or MPO's Planning Work Program. The letter must be signed by the appropriate state official or their designee and must specify the state and the amount of funding to be transferred for the CPG by apportionment category (e.g. STP, CMAQ, Donor State Bonus, Funding Restoration, etc.) and by appropriation year. The letter should include only the funding for planning activities contained in the state's or MPO's Planning Work Program. If no FTA program, either Metropolitan Planning (49 U.S.C. 5303) or Statewide Planning and Research (49 U.S.C. 5313(b)), is indicated for transfers to CPG, funds will be credited to the Metropolitan Planning Program.

As part of the pilot, FTA will continue to work with participating states to increase the flexibility and further streamline the consolidated approach to planning grants. For further information on participating in the CPG Pilot, contact Candace Noonan, Intermodal and Statewide Planning Division, FTA, at (202) 366–1648 or Anthony Solury, Office of Planning and Environment, FHWA, at (202) 366–5003.

I. New Starts Approval To Enter Preliminary Engineering and Final Design

TEA–21 extends FTA's long-standing authority for approving the advancement of candidate New Starts projects into preliminary engineering (PE) by requiring that FTA also approve entrance into the final design (FD) stage of project development. Specifically, 49 U.S.C. 5309(e)(6) requires that the basis for PE/FD approval is FTA's evaluation of candidate project's New Starts criteria, leading to an overall project rating of ''Highly Recommended,'' ''Recommended,'' or ''Not Recommended.'' FTA has established a set of decision rules for approving entrance into preliminary engineering and final design. After first meeting several basic planning, environmental, and project management requirements which demonstrate the ''readiness'' of the project to advance into the next stage of project development, candidate projects are subject to FTA evaluation against the New Starts project justification and local financial commitment criteria. Projects may advance to the next appropriate stage of project development (PE or FD) only if rated ''Recommended'' or ''Highly Recommended,'' based on the criteria. Projects rated ''Not Recommended'' will not be approved to advance.

Section 5309(e)(8)(A) of Title 49 U.S.C. exempts projects which request a section 5309 New Starts share of less than $25 million from the requirements of section 5309(e). TEA–21 also provides statutory exemptions to certain specific projects. It is important to note that any exemption under section 5309(e)(8)(A) applies only to the New Starts criteria serving as the basis for FTA's approval to advance to preliminary engineering and final design for such projects. New Starts projects with less than $25 million in New Starts funding must still request entrance to the next stage of development, and must fulfill all appropriate planning, environmental, and project management requirements.

Aside from the formal evaluation and rating of (non-exempt) New Starts projects, the general process for approving entrance into PE and FD is largely consistent with FTA's prior procedures for approving entrance into preliminary engineering. FTA issued guidance for evaluating and approving local agency requests for advancing projects in the New Starts project development process in FY 2000. Another revision is planned for 2001.

V. Section 5307 Urbanized Area Formula Program

A. Total Urbanized Area Formula Apportionments

The amount made available to the Urbanized Area Formula Program in the FY 2001 DOT Appropriations Act was $2,942,578,081. After the .22 percent reduction for the government-wide rescission required by the FY 2001 Omnibus Consolidated Appropriations Act and transfer of $1,000,000 to the OIG, $2,935,106,609 is available.

In addition to the $2,935,106,609 available in FY 2001 funds, the apportionment includes $4,735,805 in deobligated funds, which became available for reapportionment under the Urbanized Area Formula Program as provided by 49 U.S.C. 5336(i).

Table 4 displays the amount apportioned for the Urbanized Area Formula Program. After reserving ($13,682,722) for oversight, the amount of FY 2001 funds available for apportionment is $2,921,423,887. The funds to be reapportioned, described in the previous paragraph, are then added and increase the total amount apportioned for this program to $2,926,159,692.

An additional $4,839,280 is made available for the Alaska Railroad for improvements to its passenger operations, after the .22 percent reduction required by the FY 2001 Omnibus Consolidated Appropriations Act. After reserving ($24,196) for oversight, $4,815,084 is available for the Alaska Railroad.

Table 12 contains the FY 2001 apportionment formula for the Section 5307 Urbanized Area Formula Program.

B. Fiscal Year 2000 Apportionment Adjustments

An adjustment has been made to the apportionment for one urbanized area because of corrections to data that were used to compute the FY 2000 formula grant apportionment published in the **Federal Register** of October 28, 1999 (64 FR 58212). The difference between the corrected apportionment and the previously published apportionment has been resolved and the necessary adjustment has been made to the area's apportionment for FY 2001. The dollar amounts published in this notice contain the adjustment, and the affected urbanized area has been advised.

C. Data Used for Urbanized Area Formula Apportionments

Data from the 1999 NTD (49 U.S.C. 5335) Report Year submitted in late 1999 and early 2000 have been used to calculate the FY 2001 Urbanized Area Formula apportionments for urbanized areas 200,000 in population and over. The population and population density figures used in calculating the Urbanized Area Formula are from the 1990 Census.

D. Urbanized Area Formula Apportionments to Governors

The total Urbanized Area Formula apportionment to the Governor for use in areas under 200,000 in population for each state is shown in Table 4. This table also contains the total apportionment amount attributable to each of the urbanized areas within the state. The Governor may determine the allocation of funds among the urbanized areas under 200,000 in population with one exception. As further discussed below in Section H, funds attributed to an urbanized area under 200,000 in population, located within the planning boundaries of a transportation management area, must be obligated in that area.

E. Transit Enhancements

For urbanized areas with populations 200,000 and over, TEA–21 established a minimum annual expenditure requirement of one percent for transit projects and project elements that qualify as enhancements under the

Urbanized Area Formula Program. Table 4 shows the amount set aside for enhancements in these areas. The term ''transit enhancement'' includes projects or project elements that are designed to enhance mass transportation service or use and are physically or functionally related to transit facilities.

(1) *Eligible Enhancements.* The following are transit projects and project elements that may be counted to meet the minimum enhancement expenditure requirement:

(a) historic preservation, rehabilitation, and operation of historic mass transportation buildings, structures, and facilities (including historic bus and railroad facilities);

(b) bus shelters;

(c) landscaping and other scenic beautification, including tables, benches, trash receptacles, and street lights;

(d) public art;

(e) pedestrian access and walkways;

(f) bicycle access, including bicycle storage facilities and installing equipment for transporting bicycles on mass transportation vehicles;

(g) transit connections to parks within the recipient's transit service area;

(h) signage; and

(i) enhanced access for persons with disabilities to mass transportation.

(2) *Requirements.* One percent of the Urbanized Area Formula Program apportionment in each urbanized area with a population of 200,000 and over must be made available only for transit enhancements. When there are several grantees in an urbanized area, it is not required that each grantee spend one percent of its Urbanized Area Formula Program funds on transit enhancements. Rather, one percent of the urbanized area's apportionment must be expended on projects and project elements that qualify as enhancements. If these funds are not obligated for transit enhancements within three years following the fiscal year in which the funds are apportioned, the funds will lapse and no longer be available to the urbanized area, and will be reapportioned under the Urbanized Area Formula Program.

It will be the responsibility of the MPO to determine how the one percent will be allotted to transit projects. The one percent minimum requirement does not preclude more than one percent being expended in an urbanized area for transit enhancements. Items that are only eligible as enhancements—in particular, operating costs for historic facilities—may be assisted only within the one percent fund level.

(3) *Project Budget.* The project budget for each grant application that includes enhancement funds must include a scope code for transit enhancements and specific budget activity line items for transit enhancements.

(4) *Bicycle Access.* TEA–21 provides that projects providing bicycle access to transit assisted with the FTA enhancement apportionment shall be eligible for a 95 percent Federal share.

(5) *Enhanced Access for Persons with Disabilities.* Enhancement projects or elements of projects designed to enhance access for persons with disabilities must go beyond the requirements contained in the Americans with Disabilities Act of 1990, 42 U.S.C. 12101 *et seq.*

(6) *Enhancement Report.* The recipient must submit a report to the appropriate FTA Regional Office listing the projects or elements of projects carried out with those funds during the previous fiscal year and the amount awarded. The report must be submitted with the Federal fiscal year's final quarterly progress report in the Transportation Electronic Awards and Management System (TEAM). The report should include the following elements: (a) Grantee name, (b) urbanized area name and number, (c) FTA project number, (d) transit enhancement category, (e) brief description of enhancement and progress towards project implementation, (f) activity line item code from the approved budget, and (g) amount awarded by FTA for the enhancement.

F. Fiscal Year 2001 Operating Assistance

FY 2001 funding for operating assistance is available only to urbanized areas with populations under 200,000. For these areas, there is no limitation on the amount of the state apportionment that may be used for operating assistance, and the Federal/local share ratio is 50/50.

TEA–21 provided two exceptions to the restriction on operating assistance in areas over 200,000 in population. These exceptions have been addressed and eligible areas identified.

G. Unobligated Funds for Operating Assistance

Unobligated funds for FY 1998, which were eligible for use as operating assistance, are still available for operating assistance. However, the operating assistance limitations remain on the unobligated FY 1998 funds. These funds continue to be available for obligation at the Federal/local share ratio of 50/50 through FY 2001. If the FY 1998 funds are not obligated before the end of FY 2001 they lapse to the area and are reapportioned. For unobligated FY 1998 funds for areas under 200,000, operating assistance as a capital project with an 80 percent federal match ratio (without limitation) will continue to be available through FY 2001.

H. Designated Transportation Management Areas

All urbanized areas over 200,000 in population have been designated as Transportation Management Areas (TMAs), in accordance with 49 U.S.C. 5305. These designations were formally made in a **Federal Register** Notice dated May 18, 1992 (57 FR 21160). Additional areas have been designated as TMAs upon the request of the Governor and the MPO designated for such area or the affected local officials. During FY 2000, no additions to existing TMAs were designated.

Guidance for setting the boundaries of TMAs is contained in the joint transportation planning regulations codified at 23 CFR part 450 and 49 CFR part 613. In some cases, the TMA boundaries, which have been established by the MPO for the designated TMA, also include one or more urbanized areas with less than 200,000 in population. Where this situation exists, the discretion of the Governor to allocate Urbanized Area Formula Program ''Governor's Apportionment'' funds for urbanized areas with less than 200,000 in population is restricted.

As required by 49 U.S.C. 5307(a)(2), a recipient(s) must be designated to dispense the Urbanized Area Formula funds attributable to TMAs. Those urbanized areas that do not already have a designated recipient must do so and notify the appropriate FTA Regional Office of the designation. This includes those urbanized areas with less than 200,000 in population that may receive TMA designation independently, or those with less than 200,000 in population that are currently included within the boundaries of a larger designated TMA. In either case, the Governor only has discretion to allocate Governor's Apportionment funds attributable to areas that are outside of designated TMA boundaries. To enable FTA and Governors to identify which urbanized areas under 200,000 in population are included within the boundaries of an existing TMA, so that they can be identified in future **Federal Register** notices, each MPO whose TMA planning boundaries include these smaller urbanized areas is requested to report such areas to FTA. This notification should be made in writing to the Associate Administrator for

Program Management, Federal Transit Administration, 400 Seventh Street, SW, Washington, DC 20590, no later than July 1 of each fiscal year. To date, FTA has been notified of the following urbanized areas with population less than 200,000 that are included within the planning boundaries of designated TMAs:

Designated TMA	Small urbanized area included in TMA boundaries
Baltimore, Maryland.	Annapolis, Maryland.
Dallas-Fort Worth	Denton, Texas; Lewisville, Texas.
Houston, Texas ..	Galveston, Texas; Texas City, Texas.
Orlando, Florida	Kissimmee, Florida.
Melbourne-Palm Bay, Florida.	Titusville, Florida.
Philadelphia, Pennsylvania.	Pottstown, Pennsylvania.
Pittsburgh, Pennsylvania.	Monessen, Pennsylvania; Steubenville-Weirton, OH–WV–PA (PA portion).
Seattle, Washington.	Bremerton, Washington.
Washington, DC–MD–VA.	Frederick, Maryland (MD portion).

I. Urbanized Area Formula Funds Used for Highway Purposes

Urbanized Area Formula funds apportioned to a TMA can be transferred to FHWA and made available for highway projects if the following three conditions are met: (1) Such use must be approved by the MPO in writing after appropriate notice and opportunity for comment and appeal are provided to affected transit providers; (2) in the determination of the Secretary, such funds are not needed for investments required by the Americans with Disabilities Act of 1990 (ADA); and (3) the MPO determines that local transit needs are being addressed.

Urbanized Area Formula funds that are designated for highway projects will be transferred to and administered by FHWA. The MPO should notify FTA of its intent to program FTA funds for highway purposes.

J. National Transit Database Internet Reporting

The National Transit Database (NTD) is FTA's national database for statistics on the transit industry, including safety data. In recent years, about 600 FTA grantees have used diskettes to report on their operating, financial and safety statistics to FTA.

Urbanized Area Formula Program funds for areas 200,000 and over in population are apportioned, in part, using NTD statistics. In addition, NTD data is summarized and used to report to Congress on the performance of the transit industry and the associated costs. These data are also used to assess whether FTA Strategic Plan goals have been met.

In FY 2001, NTD data may be reported via a new Internet-based reporting system or by the traditional diskette. Over 300 NTD reporters have been trained on the new Internet system. Internet reporting should speed data collection and validation. The FTA encourages each agency to use the new Internet reporting system.

VI. Section 5311 Nonurbanized Area Formula Program and Section 5311(b) Rural Transit Assistance Program (RTAP)

A. Nonurbanized Area Formula Program

The amount made available for the Nonurbanized Area Formula Program in the FY 2001 DOT Appropriations Act was $205,461,168. After the .22 percent reduction for the government-wide rescission required by the FY 2001 Omnibus Consolidated Appropriations Act, $205,009,154 is available.

The FY 2001 Nonurbanized Area Formula apportionments to the states total $205,485,900 and are displayed in Table 5. Of the $205,009,154 available, ($1,025,046) was reserved for oversight. In addition to the FY 2001 funding, the funds available for apportionment included $1,501,792 in deobligated funds from fiscal years prior to FY 2001. The population figures used in calculating these apportionments are from the 1990 Census.

The Nonurbanized Formula Program provides capital, operating and administrative assistance for areas under 50,000 in population. Each state must spend no less than 15 percent of its FY 2001 Nonurbanized Area Formula apportionment for the development and support of intercity bus transportation, unless the Governor certifies to the Secretary that the intercity bus service needs of the state are being adequately met. FY 2001 Nonurbanized Area Formula grant applications must reflect this level of programming for intercity bus or include a certification from the Governor.

B. Rural Transit Assistance Program (RTAP)

Funding made available for the RTAP in the 2001 DOT Appropriations Act was $5,250,000—the guaranteed funding level under TEA–21. This amount has been reduced to $5,238,450, after applying the .22 percent reduction for the government-wide rescission required by the FY 2001 Omnibus Consolidated Appropriations Act.

The FY 2001 RTAP allocations to the states total $5,404,340 and are also displayed in Table 5. This amount includes $5,238,450 in FY 2001 funds, and $165,890 in prior year deobligated funds, which are available for reapportionment.

The funds are allocated to the states to undertake research, training, technical assistance, and other support services to meet the needs of transit operators in nonurbanized areas. These funds are to be used in conjunction with the states' administration of the Nonurbanized Area Formula Program.

FTA requested and Congress made available an additional $750,000 in FY 2001 (in the FY 2001 DOT Appropriations Act) to support RTAP activities carried out at the national level. The national projects support the states in their use of the formula allocations for training and technical assistance. These funds are also subject to the .22 percent reduction required by the FY 2001 Omnibus Consolidated Appropriations Act and will be reduced accordingly.

VII. Section 5310 Elderly and Persons With Disabilities Program

Funds in the amount of $77,410,801 were made available for the Elderly and Persons with Disabilities Program in the FY 2001 DOT Appropriations Act. After the .22 percent reduction for the government-wide rescission required by the FY 2001 Omnibus Consolidated Appropriations Act, $77,240,497 is available.

A total of $77,560,406 is apportioned to the states for FY 2001 for the Elderly and Persons with Disabilities Program. In addition to the FY 2001 funding of $77,240,497, the FY 2001 apportionment includes $319,909 in prior year unobligated funds, which are available for reapportionment under the Elderly and Persons with Disabilities Program. Table 6 shows each state's apportionment.

The formula for apportioning these funds uses 1990 Census population data for persons aged 65 and over and for persons with disabilities.

The funds provide capital assistance for transportation for elderly persons and persons with disabilities. Eligible capital expenses may include, at the option of the recipient, the acquisition of transportation services by a contract, lease, or other arrangement.

While the assistance is intended primarily for private non-profit organizations, public bodies that coordinate services for the elderly and persons with disabilities, or any public

body that certifies to the state that there are no non-profit organizations in the area that are readily available to carry out the service, may receive these funds.

These funds may be transferred by the Governor to supplement the Urbanized Area Formula or Nonurbanized Area Formula capital funds during the last 90 days of the fiscal year.

VIII. FHWA Surface Transportation Program and Congestion Mitigation and Air Quality Funds Used for Transit Purposes (Title 23, U.S.C.)

A. Transfer Process

TEA–21 made changes in how to apply the flexibility provisions of funds transferred from FHWA to FTA. Section 1103(i) of TEA–21, as amended, provides that when funds are transferred, obligation authority will be transferred to the receiving agency. Under ISTEA, obligation authority was not transferred.

Effective October 1, 1999, new procedures were implemented to accommodate this change for FY 2000 and subsequent years. The process for transfers to the FTA formula programs is described below. Information on the transfer of FHWA funds to FTA planning programs can be found in section IV.H., above.

Transfer from FHWA to FTA. FHWA funds designated for use in transit capital projects must result from the metropolitan and state planning and programming process, and must be included in an approved Statewide Transportation Improvement Program (STIP) before the funds can be transferred. The state DOT requests, by letter, the transfer of highway funds for a transit project to the FHWA Division Office. The letter should specify the project, amount to be transferred, apportionment year, state, federal aid apportionment category (*i.e.* Surface Transportation Program (STP), Congestion Mitigation and Air Quality (CMAQ), Interstate Substitute, or congressional earmark), and a description of the project as contained in the STIP.

The FHWA Division Office confirms that the apportionment amount is available for transfer and concurs in the transfer by letter to the state DOT and FTA. FHWA then transfers obligation authority and an equal amount of cash to FTA. All CMAQ or STP, or FHWA earmark funds will be transferred to one of the three FTA formula capital programs (i.e. Urbanized Area Formula (section 5307), Nonurbanized Area Formula (section 5311) or Elderly and Persons with Disabilities (section 5310).

The FTA grantee application for the project must specify for which Title 49 U.S.C., transit program funds will be used and the application should be prepared in accordance with the requirements and procedures governing that section. Upon review and approval of the grantee's application, FTA obligates funds for the project.

The transferred funds are treated as FTA formula funds, although they retain an identifying code for tracking purposes. The funds may be used for any purpose eligible under the FTA formula capital program to which they are transferred. CMAQ funds, however, have to be used for air quality purposes and some eligible projects are defined by the Clean Air Act. All FTA requirements are applicable to transferred funds. Transferred funds should be combined with regular FTA funds in a single annual grant application.

Transfers from FTA to FHWA. The Metropolitan Planning Organization (MPO) submits a request to the FTA Regional Office for a transfer of FTA section 5307 formula funds (apportioned to an urbanized area 200,000 and over in population) to FHWA based on approved use of the funds for highway purposes, as contained in the Governor's approved State Transportation Improvement Program. The MPO must certify that: (1) The funds are not needed for capital investments required by the Americans with Disabilities Act; (2) notice and opportunity for comment and appeal has been provided to affected transit providers; and (3) local funds used for non-Federal match are eligible to provide assistance for either highway or transit projects. The FTA Regional Administrator reviews and concurs in the request then forwards the approval to FTA Headquarters, where a reduction is made to the grantee's formula apportionment and FTA's National Operating Budget in TEAM (FTA's electronic grants management system), by the dollar amount being transferred to FHWA.

For information regarding these procedures, please contact Kristen D. Clarke, FTA Budget Division at (202) 366–1699 or Richard Meehleib, FHWA Finance Division at (202) 366–2869.

B. Matching Share for FHWA Transfers

The provisions of Title 23, U.S.C., regarding the non-federal share apply to Title 23 funds used for transit projects. Thus, FHWA funds transferred to FTA retain the same matching share that the funds would have if used for highway purposes and administered by the FHWA.

There are three instances in which a higher than 80 percent federal share would be permitted. First, in states with large areas of Indian and certain public domain lands, and national forests, parks and monuments, the local share for highway projects is determined by a sliding scale rate, calculated based on the percentage of public lands within that state. This sliding scale, which permits a greater federal share, but not to exceed 95 percent, is applicable to transfers used to fund transit projects in these public land states. FHWA develops the sliding scale matching ratios for the increased federal share.

Secondly, commuter carpooling and vanpooling projects and transit safety projects using FHWA transfers administered by FTA may retain the same 100 percent federal share that would be allowed for ride-sharing or safety projects administered by the FHWA.

The third instance includes the 100 percent federal safety projects; however, these are subject to a nationwide 10 percent program limitation.

IX. Section 5309 Capital Investment Program

A. Fixed Guideway Modernization

The formula for allocating the Fixed Guideway Modernization funds contains seven tiers. The allocation of funding under the first four tiers, through FY 2003, will be based on data used to apportion the funding in FY 1997. Funding under the last three tiers will be apportioned based on the latest available route miles and revenue vehicle miles on segments at least seven years old as reported to the National Transit Database.

Table 7 displays the FY 2001 Fixed Guideway Modernization apportionments. Fixed Guideway Modernization funds apportioned for this section must be used for capital projects to maintain, modernize, or improve fixed guideway systems.

All urbanized areas with fixed guideway systems that are at least seven years old are eligible to receive Fixed Guideway Modernization funds. A request for the start-up service dates for fixed guideways has been incorporated into the National Transit Database reporting system to ensure that all eligible fixed guideway data is included in the calculation of the apportionments. A threshold level of more than one mile of fixed guideway is required to receive Fixed Guideway Modernization funds. Therefore, urbanized areas reporting one mile or less of Fixed Guideway mileage under

the National Transit Database are not included.

For FY 2001, $1,058,400,000 was made available for fixed guideway modernization in the FY 2001 DOT Appropriations Act, which was the guaranteed funding level in TEA–21. After applying the .22 percent reduction for the government-wide rescission required by the FY 2001 Omnibus Consolidated Appropriations Act, $1,056,071,520 is available.

An amount of ($7,920,536) was then deducted for oversight, leaving $1,048,150,984 available for apportionment to the eligible urbanized areas. In addition to the FY 2001 funding, $289,758 in deobligated funds from fiscal years prior to FY 2001 is added and increases the total amount apportioned to $1,048,440,742 under fixed guideway modernization. Table 13 contains information regarding the fixed guideway modernization apportionment formula.

B. New Starts

Amounts made available for New Starts in the FY 2001 DOT Appropriations Act was $1,058,400,000, which was fully allocated and represents the guaranteed funding level under TEA–21. After applying the .22 percent reduction for the government-wide rescission and adding appropriated funding of $1,000,000 for Southeast Light Rail Extension project, in Dallas, TX, and $3,000,000 for the Newark-Elizabeth rail link project in New Jersey, as directed by the FY 2001 Omnibus Consolidated Appropriations Act, $1,060,062,720 is available.

Of this amount ($7,942,987) was reserved for oversight activities, leaving $1,052,119,733 available for allocations to projects. Prior year unobligated funds specified by Congress to be reallocated in the amount of $26,994,048 are then added and increase the total amount allocated to $1,079,113,781. The reallocated funds were derived from unobligated and deobligated balances for the following projects: Burlington to Gloucester, New Jersey (Pub.L. 103–331), $1,488,750; Orlando, Florida Lynx rail project, $20,521,470; and Pittsburgh, Pennsylvania airport busway project (Pub.L. 105–66), $4,983,828. The final allocation for each New Starts project is shown in Table 8 of this notice.

Prior year unobligated allocations for New Starts in the amount of $459,373,575 remain available for obligation in FY 2001. This amount includes $448,966,118 in fiscal years 1999 and 2000 unobligated allocations, and $10,407,457 for fiscal years 1997 and 1998 unobligated allocations that were extended in the Conference Report. These unobligated amounts are displayed in Table 8A.

Capital Investment Program funds for New Starts projects identified as having been extended in the Conference Report accompanying the FY 2001 DOT Appropriations Act will lapse September 30, 2001. A list of the extended project amounts that remain unobligated as of September 30, 2000 is appended to Table 8A for ready reference.

The FY 2001 DOT Appropriations Act directs that a New Starts FY 1999 allocation for the Colorado North Front Range corridor feasibility study ($496,280) is to be made available for the ''Colorado Eagle Airport to Avon light rail system feasibility study.'' Also, section 360 of the FY 2001 DOT Appropriations Act provides that a FY 1998 allocation for Jackson, Mississippi Intermodal Corridor is now available for obligation in this fiscal year for studies to evaluate and define transportation alternatives, including an intermodal facility at Jackson International Airport and for related preliminary engineering, final design or construction.

C. Bus

The FY 2001 DOT Appropriations Act provides $529,200,000, for the purchase of buses, bus-related equipment and paratransit vehicles, and for the construction of bus-related facilities. This amount represents the guaranteed funding level under TEA–21. After the .22 percent reduction for the government-wide rescission and adding newly appropriated funding of $500,000 for the Alabama A&M University buses and bus facilities project, as directed by the FY 2001 Omnibus Consolidated Appropriations Act, $528,534,660 is available.

TEA–21 established a $100,000,000 Clean Fuels Formula Program under Section 5308. The program is authorized to be funded with $50,000,000 from the Bus category of the Capital Investment Program, and $50,000,000 from the Formula Program. However, recent congressional appropriation actions have directed the formula portion of the Clean Fuels Program be transferred and available for the Bus category of the Capital Investment Program. In addition, these funds have been reduced by .22 percent, in accordance with the government-wide rescission. Thus, $578,424,660 of funds appropriated in FY 2001 is available for funding the Bus category of the Capital Investment Program. After deducting ($4,334,443) for oversight, the amount of FY 2001 funds available for allocation is $574,090,217.

The Conference Report accompanying the FY 2001 DOT Appropriations Act allocated most of the FY 2001 Bus funds to specified states or localities for bus and bus-related projects. FTA will honor those allocations to the extent that they comply with the statutory authorization for that program. However, allocations for two projects authorized to be funded under TEA–21 (the ''Georgetown University fuel cell bus program'' and the ''Altoona bus testing facility'') were not included in the Conference Report. Absent language overriding the authorization, these projects need to be funded with section 5309 Bus funds. To provide funding for these projects at the levels authorized under TEA–21, a minor deduction was applied to the other Bus allocations on a prorated basis. In addition, the suballocations for the Commonwealth of Virginia specified in the Conference Report exceeded the statewide allocation amount. Therefore, a prorated reduction was applied to each statewide suballocation to correct the difference so that the total for the suballocations equaled the statewide allocated amount. Table 9 displays the allocation of the FY 2001 Bus funds by state and project.

Prior year unobligated balances for Bus Program allocations in the amount of $443,354,553 remain available for obligation in FY 2001. This includes $436,416,460 in fiscal years 1999 and 2000 unobligated allocations, and $6,938,093 for fiscal years 1997 and 1998 unobligated allocations that were extended in the Conference Report. These unobligated amounts are displayed in Table 9A.

Capital Investment Program funds for Bus projects identified as having been extended in the Conference Report accompanying the FY 2001 DOT Appropriations Act will lapse September 30, 2001. A list of the extended project amounts that remain unobligated as of September 30, 2000 is appended to Table 9A for ready reference.

In addition, the Conference Report indicates that the following revisions to projects or the reprogramming of funds should be made under the bus category:

(1) Two FY 2000 bus allocations, Alabama, Gees Bend Ferry facilities, Wilcox County ($3,743,808) and Alabama, Jefferson State Community College/University of Montevallo pedestrian walkway ($198,503) are made available to the State of Alabama for buses and bus-related facilities;

(2) remaining balances of $800,000 from FY 1999 and FY 2000 allocations to Fayette County, PA are made available for an intermodal parking facility in Cambria County, PA;

(3) FY 2000 allocation for Michigan statewide buses is expanded to include ''bus-related equipment and bus facilities;''

(4) up to $560,000 of funds allocated for the transportation depot and plaza project in Hot Springs, Arkansas in FY 2000, may be available for buses and bus facilities; and

(5) fiscal year 1999 and 2000 allocations for ''Intermodal Facilities'' for Washington County, and Westmoreland County, PA shall include ''bus and bus facilities.''

X. Job Access and Reverse Commute Program

The FY 2001 DOT Appropriations Act provides $100 million for the Job Access and Reverse Commute Program, which is the guaranteed funding level under TEA–21. After the .22 percent reduction for the government-wide rescission required by the FY 2001 Omnibus Consolidated Appropriations Act, this amount has been reduced to $99,780,000. Of this amount, $75,079,461 has been allocated to 67 states and localities specified in the FY 2001 Conference report. These allocations are listed in Table 10. FTA will honor those allocated projects that meet the statutory intent of the program.

This program, established under TEA–21, provides funding for the provision of transportation services designed to increase access to jobs and employment-related activities. Job Access projects are those that transport welfare recipients and low-income individuals in urban, suburban, or rural areas to and from jobs and activities related to their employment. Reverse Commute projects provide transportation services for the general public from urban, suburban, and rural areas to suburban employment opportunities. A total of up to $10,000,000 from the appropriation can be used for Reverse Commute Projects.

One of the goals of the Job Access and Reverse Commute program is to increase collaboration among transportation providers, human service agencies, employers, metropolitan planning organizations, states, and affected communities and individuals. All projects funded under this program must be derived from an area-wide Job Access and Reverse Commute Transportation Plan, developed through a regional approach which supports the implementation of a variety of transportation services designed to connect welfare recipients to jobs and related activities. A key element of the program is making the most efficient use of existing public, nonprofit and private transportation service providers.

In FY 2000, $49,570,000 was allocated to projects specified in the FY 2000 Conference report. FTA undertook a national solicitation of applications for the remaining funds under this program and conducted a competitive process to select applications. As a result, FTA selected 91 competitive proposals for a total of $25.69 million, including projects in 44 states and the District of Columbia.

XI. Over-the-Road Bus Accessibility Program

The amount made available for the Over-the-Road Bus Accessibility (OTRB) Program in the FY 2001 DOT Appropriations Act was $4,700,000, which is the guaranteed funding level under TEA–21. After applying the .22 percent reduction for the government-wide rescission required by the FY 2001 Omnibus Consolidated Appropriations Act, this amount has been reduced to $4,689,660. Of this amount, $2,993,400 is available to providers of intercity fixed-route service, and $1,696,260 is available to other providers of over-the-road bus services, including local fixed-route service, commuter service, and charter and tour service.

The OTRB program authorizes FTA to make grants to operators of over-the-road buses to help finance the incremental capital and training costs of complying with the DOT over-the-road bus accessibility final rule, published in a **Federal Register** Notice on September 24, 1998. Funds will be provided at 90 percent Federal share. FTA conducts a national solicitation of applications and grantees are selected on a competitive basis.

In FY 2000, a total of $2 million was available to intercity fixed-route providers and $1.7 million was available to all other providers. FTA selected 47 applicants from among the 57 applications submitted for funding incremental capital and training costs of complying with DOT's OTRB Accessibility requirements.

A separate **Federal Register** Notice providing program guidance and application procedures for FY 2001 will be issued.

XII. Clean Fuels Formula Program

TEA–21 established the Clean Fuels Formula Grant Program under section 5308 of Title 49 U.S.C., to assist non-attainment and maintenance areas in achieving or maintaining attainment status and to support markets for emerging clean fuel technologies. Under the program, public transit agencies in maintenance and non-attainment areas (as defined by the EPA) are to apply for formula funds to acquire clean fuel vehicles. The legislation specified the program to be funded with $50,000,000 from the bus category of the Capital Investment Program, and $50,000,000 from the Urbanized Area Formula Program in each fiscal year of TEA–21.

However, congressional appropriation actions in this fiscal year as well as in fiscal years 1999 and 2000, have provided no funds for this program.

XIII. Unit Values of Data for the Section 5307 Urbanized Area Formula Program, Section 5311 Nonurbanized Area Formula Program, and Section 5309 Capital Fixed Guideway Modernization

The dollar unit values of data derived from the computations of the Urbanized Area Formula Program, the Nonurbanized Area Formula Program, and the Capital Investment Program—Fixed Guideway Modernization apportionments are displayed in Table 14 of this notice. To determine how an apportionment amount was computed for an area, multiply its population, population density, and data from the NTD by the unit values.

XIV. Period of Availability of Funds

The funds apportioned under the Metropolitan Planning Program and the State Planning and Research Program, the Urbanized Area Formula Program, and the Fixed Guideway Modernization Program, in this notice, will remain available to be obligated by FTA to recipients for three fiscal years following FY 2001. Any of these apportioned funds unobligated at the close of business on September 30, 2004 will revert to FTA for reapportionment under these respective programs.

Funds apportioned to nonurbanized areas under the Nonurbanized Area Formula Program, including RTAP funds, will remain available for two fiscal years following FY 2001. Any such funds remaining unobligated at the close of business on September 30, 2003, will revert to FTA for reapportionment among the states under the Nonurbanized Area Formula Program. Funds allocated to states under the Elderly and Persons with Disabilities Program in this notice must be obligated by September 30, 2001. Any such funds remaining unobligated as of this date will revert to FTA for reapportionment among the states under the Elderly and Persons with Disabilities Program. The FY 2001 DOT Appropriations Act includes a provision requiring that FY 2001 New Starts and Bus funds not obligated for their original purpose as of September 30, 2003, shall be made available for other projects under 49 U.S.C. 5309.

Capital Investment Program funds for New Starts and Bus projects identified as having been extended in the Conference Report accompanying the FY 2001 DOT Appropriations Act will lapse September 30, 2001.

XV. Automatic Pre-award Authority to Incur Project Costs

A. Policy

FTA provides blanket or automatic pre-award authority to cover certain program areas described below. This pre-award authority allows grantees to incur project costs prior to grant approval and retain their eligibility for subsequent reimbursement after grant approval. The grantee assumes all risk and is responsible for ensuring that all conditions, which are described below, are met to retain eligibility. This automatic pre-award spending authority permits a grantee to incur costs on an eligible transit capital or planning project without prejudice to possible future Federal participation in the cost of the project or projects. Prior to exercising pre-award authority, grantees must comply with the conditions and Federal requirements outlined in paragraphs B and C immediately below. Failure to do so will render an otherwise eligible project ineligible for FTA financial assistance. In addition, grantees are strongly encouraged to consult with the appropriate regional office if there could be any question regarding the eligibility of the project for future FTA funds or the applicability of the conditions and Federal requirements.

Authority to incur costs for FY 1998 Fixed Guideway Modernization, Metropolitan Planning, Urbanized Area Formula, Elderly and Persons with Disabilities, Nonurbanized Area Formula, STP or CMAQ flexible funds to be transferred from the FHWA and State Planning and Research Programs in advance of possible future Federal participation was provided in the December 5, 1997, **Federal Register** Notice. Pre-award authority was extended in the June 24, 1998 **Federal Register** Notice on TEA–21 to all formula funds and flexible funds that will be apportioned during the authorization period of TEA–21, 1998–2003.

Pre-award authority also applies to Capital Investment Bus allocations identified in this notice. Pre-award authority does not apply to Capital New Start funds, or to Capital Investment Bus projects not specified in this or previous notices, except as described in D. below. Pre-award authority also applies to preventive maintenance costs incurred within a local fiscal year ending during calendar year 1997, or thereafter, under the formula programs cited above.

For section 5309 Capital Investment Bus projects, the date that costs may be incurred is the date that the appropriation bill in which they are contained is enacted. For blanket pre-award authority in formula programs described above, the effective date is June 9, 1998.

B. Conditions

Similar to the FTA Letter of No Prejudice (LONP) authority, the conditions under which this authority may be utilized are specified below:

(1) The pre-award authority is not a legal or moral commitment that the project(s) will be approved for FTA assistance or that FTA will obligate Federal funds. Furthermore, it is not a legal or moral commitment that all items undertaken by the applicant will be eligible for inclusion in the project(s).

(2) All FTA statutory, procedural, and contractual requirements must be met.

(3) No action will be taken by the grantee that prejudices the legal and administrative findings that the Federal Transit Administrator must make in order to approve a project.

(4) Local funds expended by the grantee pursuant to and after the date of the pre-award authority will be eligible for credit toward local match or reimbursement if FTA later makes a grant for the project(s) or project amendment(s).

(5) The Federal amount of any future FTA assistance awarded to the grantee for the project will be determined on the basis of the overall scope of activities and the prevailing statutory provisions with respect to the Federal/local match ratio at the time the funds are obligated.

(6) For funds to which the pre-award authority applies, the authority expires with the lapsing of the fiscal year funds.

(7) The Financial Status Report, in TEAM, must indicate the use of pre-award authority.

C. Environmental, Planning, and Other Federal Requirements

FTA emphasizes that all of the Federal grant requirements must be met for the project to remain eligible for Federal funding. Some of these requirements must be met before pre-award costs are incurred, notably the requirements of the National Environmental Policy Act (NEPA), and the planning requirements. Compliance with NEPA and other environmental laws or executive orders (*e.g.,* protection of parklands, wetlands, historic properties) must be completed before state or local funds are spent on implementing activities such as final design, construction, and acquisition for a project that is expected to be subsequently funded with FTA funds. Depending on which class the project is included under in FTA environmental regulations (23 CFR 771), the grantee may not advance the project beyond planning and preliminary engineering before FTA has issued either a categorical exclusion (refer to 23 CFR 771.117(d)), a finding of no significant impact, or a final environmental impact statement. The conformity requirements of the Clean Air Act (40 CFR part 93) also must be fully met before the project may be advanced with non-Federal funds.

Similarly, the requirement that a project be included in a locally adopted metropolitan transportation improvement program and federally approved statewide transportation improvement program must be followed before the project may be advanced with non-Federal funds. For planning projects, the project must be included in a locally approved Planning Work Program that has been coordinated with the State. In addition, Federal procurement procedures, as well as the whole range of Federal requirements, must be followed for projects in which Federal funding will be sought in the future. Failure to follow any such requirements could make the project ineligible for Federal funding. In short, this increased administrative flexibility requires a grantee to make certain that no Federal requirements are circumvented through the use of pre-award authority. If a grantee has questions or concerns regarding the environmental requirements, or any other Federal requirements that must be met before incurring costs, it should contact the appropriate regional office.

Before an applicant may incur costs either for activities expected to be funded by New Start funds, or for Bus Capital projects not listed in this notice or previous notices, it must first obtain a written LONP from FTA. To obtain an LONP, a grantee must submit a written request accompanied by adequate information and justification to the appropriate FTA regional office.

D. Pre-Award Authority for New Starts Projects Approved for Preliminary Engineering and/or Final Design

New Starts Projects are required to follow a federally defined planning process. This process includes, among other things, FTA approval of entry of a project into preliminary engineering and approval to enter final design. The grantee request for entry into preliminary engineering and the request

for entry into final design both document the project and how it meets the New Starts criteria in detail. With FTA approval to enter preliminary engineering, and subsequent approval to enter final design, FTA will automatically extend pre-award authority to that phase of project development. The pre-award authority to incur costs for final design is strictly limited to design work. No capital items or right of way acquisition is included in this blanket pre-award authority.

This provision was first implemented in FY 2000 and is intended to streamline and eliminate duplicative and unnecessary paperwork and reinforce the importance of these New Starts approval actions. New Starts construction or right-of-way acquisition as well as New Starts planning funded with section 5309 funds not covered by preliminary engineering or final design approval still need letters of no prejudice requested as described below.

XVI. Letter of No Prejudice Policy (Prior Approval of Pre-Award Authority)

A. Policy

Letter of No Prejudice (LONP) Policy authority allows an applicant to incur costs on a future project utilizing non-Federal resources with the understanding that the costs incurred subsequent to the issuance of the LONP may be reimbursable as eligible expenses or eligible for credit toward the local match should FTA approve the project at a later date. LONPs are applicable to projects not covered by automatic pre-award authority. The majority of LONPs will be for Section 5309 New Starts funds not covered under a full funding grant agreement or for Section 5309 Bus funds not yet appropriated by Congress. At the end of an authorization period, there may be LONPs for formula funds beyond the life of the current authorization.

Under most circumstances the LONP will cover the total project. Under certain circumstances the LONP may be issued for local match only. In such cases the local match would be to permit real estate to be used for match for the project at a later date.

B. Conditions

The following conditions apply to all LONPs.

(1) LONP pre-award authority is not a legal or moral commitment that the project(s) will be approved for FTA assistance or that FTA will obligate Federal funds. Furthermore, it is not a legal or moral commitment that all items undertaken by the applicant will be eligible for inclusion in the project(s).

(2) All FTA statutory, procedural, and contractual requirements must be met.

(3) No action will be taken by the grantee that prejudices the legal and administrative findings that the Federal Transit Administrator must make in order to approve a project.

(4) Local funds expended by the grantee pursuant to and after the date of the LONP will be eligible for credit toward local match or reimbursement if FTA later makes a grant for the project(s) or project amendment(s).

(5) The Federal amount of any future FTA assistance to the grantee for the project will be determined on the basis of the overall scope of activities and the prevailing statutory provisions with respect to the Federal/local match ratio at the time the funds are obligated.

(6) For funds to which this pre-award authority applies, the authority expires with the lapsing of the fiscal year funds.

C. Environmental, Planning, and Other Federal Requirements

As with automatic pre-award authority, FTA emphasizes that all of the Federal grant requirements must be met for the project to remain eligible for Federal funding. Some of these requirements must be met before pre-award costs are incurred, notably the requirements of the National Environmental Policy Act (NEPA), and the planning requirements. Compliance with NEPA and other environmental laws or executive orders (*e.g.,* protection of parklands, wetlands, historic properties) must be completed before state or local funds are spent on implementation activities such as final design, construction, or acquisition for a project expected to be subsequently funded with FTA funds. Depending on which class the project is included under in FTA's environmental regulations (23 CFR part 771), the grantee may not advance the project beyond planning and preliminary engineering before FTA has approved either a categorical exclusion (refer to 23 CFR part 771.117(d)), a finding of no significant impact, or a final environmental impact statement. The conformity requirements of the Clean Air Act (40 CFR part 93) also must be fully met before the project may be advanced with non-Federal funds.

Similarly, the requirement that a capital project be included in a locally adopted metropolitan transportation improvement program and federally approved statewide transportation improvement program must be followed before the project may be advanced with non-Federal funds. For planning projects, the project must be included in a locally approved Planning Work Program that has been coordinated with the State. In addition, Federal procurement procedures, as well as the whole range of Federal requirements, must be followed for projects in which Federal funding will be sought in the future. Failure to follow any such requirements could make the project ineligible for Federal funding. In short, this pre-award authority requires a grantee to make certain that no Federal requirements are circumvented. If a grantee has questions or concerns regarding the environmental requirements, or any other Federal requirements that must be met before incurring costs, it should contact the appropriate regional office.

D. Request for LONP

Before an applicant may incur costs for a project not covered by automatic pre-award authority, it must first submit a written request for an LONP to the appropriate regional office. This written request must include a description of the project for which pre-award authority is desired and a justification for the request.

XVII. FTA Home Page on the Internet

FTA provides extended customer service by making available transit information on the FTA website, including this Apportionment Notice. Also posted on the website are FTA program Circulars: C9030.1C, Urbanized Area Formula Program: Grant Application Instructions, dated October 1, 1998; C9040.1E, Nonurbanized Area Formula Program Guidance and Grant Application Instructions, dated October 1, 1998; C9070.1E, The Elderly and Persons with Disabilities Program Guidance and Application Instructions, dated October 1, 1998; C9300.1A, Capital Program: Grant Application Instructions, dated October 1, 1998; 4220.1D, Third Party Contracting Requirements, dated April 15, 1996; C5010.1C, Grant Management Guidelines, dated October 1, 1998; and C8100.1B, Program Guidance and Application Instructions for Metropolitan Planning Program Grants, dated October 25, 1996. The FY 2001 Annual List of Certifications and Assurances is also posted on the FTA website. Other documents on the FTA website of particular interest to public transit providers and users include the 1998 Statistical Summaries of FTA Grant Assistance Programs, and the National Transit Database Profiles.

FTA circulars are listed at:[http://www.fta.dot.gov/library/admin/checklist/circulars.htm]. Other guidance

of interest to Grantees can be found at: [http://www.fta.dot.gov/grantees/index.html].

Grantees should check the FTA website frequently to keep up to date on new postings.

XVIII. FTA Fiscal Year 2001 Annual List of Certifications and Assurances

The ''Fiscal Year 2001 Annual List of Certifications and Assurances'' is published in conjunction with this notice. It appears as a separate Part of the **Federal Register** on the same date whenever possible. The FY 2001 list contains several changes to the previous year's **Federal Register** publication. As in previous years, the grant applicant should certify electronically. Under certain circumstances the applicant may enter its PIN number in lieu of an electronic signature provided by its attorney, provided the applicant has on file the current affirmation of its attorney in writing dated this federal fiscal year. The applicant is advised to contact the appropriate FTA Regional Office for electronic procedure information.

The ''Fiscal Year 2001 Annual List of Certifications and Assurances'' is accessible on the Internet at [http//:www.fta.dot.gov/library/legal/ca.htm]. Any questions regarding this document may be addressed to the appropriate Regional Office.

XIX. Grant Application Procedures

All applications for FTA funds should be submitted to the appropriate FTA Regional Office. FTA utilizes an electronic grant application system known as TEAM and all applications should be filed electronically. FTA has provided exceptions to the requirement for electronic filing of applications for certain new, non-traditional grantees in the Job Access and Reverse Commute and Over-the-Road Bus Accessibility programs as well as to a few grantees that have not successfully connected to or accessed TEAM.

With FY 2001, FTA is establishing a 90-day goal for processing and approving all capital, planning and operating grants, including the section 5307 Urbanized Area Formula Program, section 5309 Fixed Guideway Modernization Program, the New Starts and Bus Programs, the section 5310 Elderly and Persons with Disabilities Program, the section 5311 Nonurbanized Area Formula Program, the Job Access and Reverse Commute Program, the Over-the-Road Bus Accessibility Program, section 5303 Metropolitan Planning Program, and section 5313(b) State Planning and Research Program. The 90-day processing time begins with the receipt of a complete application by the Regional Office. In order for an application to be considered complete, it must meet the following requirements: all projects must be contained in an approved STIP, all environmental findings must be made by FTA, there must be an adequate project description, local share must be secure, all required civil rights submissions must have been submitted, and certifications and assurances must be properly submitted. Once an application is complete, the FTA Regional Office will assign a project number and submit the application to the Department of Labor for a certification under section 5333(b). The FTA circulars referenced below contain more information regarding application contents and complete applications.

Formula and Capital Investment grant applications should be prepared in conformance with the following FTA Circulars: Program Guidance and Application Instructions for Metropolitan Planning Program Grants—C8100.1B, October 25, 1996; Urbanized Area Formula Program: Grant Application Instructions—C9030.1C, October 1, 1998; Nonurbanized Area Formula Program Guidance and Grant Application Instructions—C9040.1E, October 1, 1998; Section 5310 Elderly and Persons with Disabilities Program Guidance and Application Instructions C9070.1E, October 1, 1998; and Section 5309 Capital Program: Grant Application Instructions—C9300.1A, October 1, 1998. Guidance on preparation of applications for State Planning and Research funds may be obtained from each FTA Regional Office. Copies of circulars are available from FTA Regional Offices as well as the FTA website.

Applications for grants containing transferred FHWA funds (STP, CMAQ, and others) should be prepared in the same manner as for funds under the program to which they are being transferred. The application for flexible funds needs to specifically indicate the type and amount of flexible funds being transferred to FTA. The application should also describe which items are being funded with transferred funds, consistent with the Statewide Transportation Improvement Program (STIP).

Issued on: January 9, 2001.

Nuria I. Fernandez,

Acting Administrator.

BILLING CODE 4910–57–P

FEDERAL TRANSIT ADMINISTRATION

TABLE 1 (REVISED)

(Revised to reflect .22 percent reduction required by the FY 2001 Omnibus Consolidated Appropriations Act, Pub. L. 106-554)

REVISED FY 2001 APPROPRIATIONS FOR GRANT PROGRAMS

SOURCE OF FUNDS	ORIGINAL APPROPRIATION	REVISED APPROPRIATION	
TRANSIT PLANNING AND RESEARCH PROGRAMS			
Planning			
Section 5303 Metropolitan Planning Program	$52,113,600	$51,998,950	
Reapportioned Funds Added	279,980	279,980	
Total Apportioned	$52,393,580	$52,278,930	
Section 5313(b) State Planning and Research Program	$10,886,400	$10,862,450	
Reapportioned Funds Added	76,320	76,320	
Total Apportioned	$10,962,720	$10,938,770	
Research			
Section 5311(b)(2) Rural Transit Assistance Program (RTAP)	$5,250,000	$5,238,450	
Reapportioned Funds Added	165,890	165,890	
Total Apportioned	$5,415,890	$5,404,340	
FORMULA PROGRAMS	$3,345,000,000	$3,336,643,200	a/
Alaska Railroad (Section 5307)	4,849,950	4,839,280	
Less Oversight (one-half percent)	(24,250)	(24,196)	
Total Available	4,825,700	4,815,084	
Section 5308 Clean Fuels Formula Program	(50,000,000)	(49,890,000)	
Over-the-Road Bus Accessibility Program	4,700,000	4,689,660	
2002 Winter Olympic Games in Salt Lake City	$60,000,000	$59,868,000	
Section 5307 Urbanized Area Formula Program			
91.23% of Total Available for Sections 5307, 5311, and 5310	$2,942,578,081	$2,935,106,609	
Less Oversight (one-half percent)	(14,712,890)	(13,682,722)	
Reapportioned Funds Added	4,735,805	4,735,805	
Total Apportioned	$2,932,600,996	$2,926,159,692	
Section 5311 Nonurbanized Area Formula Program			
6.37% of Total Available for Sections 5307, 5311, and 5310	$205,461,168	$205,009,154	
Less Oversight (one-half percent)	(1,027,306)	(1,025,046)	
Reapportioned Funds Added	1,501,792	1,501,792	
Total Apportioned	$205,935,654	$205,485,900	
Section 5310 Elderly and Persons with Disabilities Formula Program			
2.4% of Total Available for Sections 5307, 5311, and 5310	$77,410,801	$77,240,497	
Reapportioned Funds Added	319,909	319,909	
Total Apportioned	$77,730,710	$77,560,406	
CAPITAL INVESTMENT PROGRAM	$2,696,000,000	$2,694,558,900	
Section 5309 Fixed Guideway Modernization	$1,058,400,000	$1,056,071,520	
Less Oversight (three-fourth percent)	(7,938,000)	(7,920,536)	
Reapportioned Funds Added	289,758	289,758	
Total Apportioned	$1,050,751,758	$1,048,440,742	
Section 5309 New Starts	$1,058,400,000	$1,060,062,720	
Less Oversight (three-fourth percent)	(7,938,000)	(7,942,987)	
Reallocated Funds Added	26,994,048	26,994,048	b/
Total Allocated	$1,077,456,048	$1,079,113,781	
Section 5309 Bus	$579,200,000	$578,424,660	c/
Less Oversight (three-fourth percent)	(4,344,000)	(4,334,443)	
Total Allocated	$574,856,000	$574,090,217	
JOB ACCESS AND REVERSE COMMUTE PROGRAM (Section 3037, TEA-21)	$100,000,000	$99,780,000	
TOTAL APPROPRIATION (Above Grant Programs)	$6,159,250,000	$6,149,191,950	

a/ Statutory percentages in formula programs are slightly adjusted due to a $1 million transfer to the OIG before the reduction was applied. The transfer to the OIG was required by the FY 2001 DOT Appropriations Act.

b/ Conference Report 106-940 reallocated funds from unobligated balances to other New Starts projects.

c/ Includes funds transferred from the Cleans Fuels Formula Program.

FEDERAL TRANSIT ADMINISTRATION

TABLE 2 (REVISED)

(Revised to reflect .22 percent reduction required by the FY 2001 Omnibus Consolidated Appropriations Act, Pub. L. 106-554)

REVISED FY 2001 SECTION 5303 METROPOLITAN PLANNING PROGRAM AND SECTION 5313(b) STATE PLANNING AND RESEARCH PROGRAM APPORTIONMENTS

STATE	REVISED SECTION 5303 APPORTIONMENT	REVISED SECTION 5313(b) APPORTIONMENT
Alabama	$457,908	$119,765
Alaska	209,116	54,694
Arizona	832,799	172,881
Arkansas	209,116	54,694
California	8,913,015	1,657,612
Colorado	680,203	154,775
Connecticut	611,144	159,844
Delaware	209,116	54,694
District of Columbia	281,927	54,694
Florida	2,850,720	662,471
Georgia	1,009,163	212,240
Hawaii	209,116	54,694
Idaho	209,116	54,694
Illinois	3,054,794	551,886
Indiana	741,608	175,269
Iowa	234,596	61,358
Kansas	271,200	66,302
Kentucky	324,845	83,112
Louisiana	561,350	145,024
Maine	209,116	54,694
Maryland	1,213,729	233,121
Massachusetts	1,480,370	307,905
Michigan	1,907,119	378,339
Minnesota	774,395	154,326
Mississippi	209,116	54,694
Missouri	856,194	181,131
Montana	209,116	54,694
Nebraska	209,116	54,694
Nevada	226,742	59,304
New Hampshire	209,116	54,694
New Jersey	2,591,730	431,523
New Mexico	209,116	54,694
New York	5,262,941	918,827
North Carolina	625,372	163,565
North Dakota	209,116	54,694
Ohio	1,801,618	433,309
Oklahoma	337,052	88,155
Oregon	378,602	92,433
Pennsylvania	2,336,651	469,143
Puerto Rico	566,656	138,335
Rhode Island	209,116	54,694
South Carolina	355,069	92,868
South Dakota	209,116	54,694
Tennessee	551,991	144,372
Texas	3,552,299	740,230
Utah	328,394	85,891
Vermont	209,116	54,694
Virginia	1,168,443	249,281
Washington	931,292	209,250
West Virginia	209,116	54,694
Wisconsin	652,027	160,431
Wyoming	209,116	54,694
TOTAL	$52,278,930	$10,938,770

FEDERAL HIGHWAY ADMINISTRATION

TABLE 3

FY 2001 ESTIMATED METROPOLITAN PLANNING PROGRAM (PL) AND ESTIMATED STATE PLANNING AND RESEARCH (SP&R) PROGRAM APPORTIONMENTS **

STATE	PL APPORTIONMENT	EST. TOTAL SP&R APPORTIONMENT	EST. SP&R PLANNING APPORTIONMENT a/
Alabama	$2,137,417	10,270,562	$7,702,922
Alaska	962,541	6,760,406	5,070,305
Arizona	3,085,368	9,989,102	7,491,827
Arkansas	962,541	7,335,479	5,501,609
California	29,583,008	50,286,824	37,715,118
Colorado	2,762,221	6,713,666	5,035,250
Connecticut	2,852,687	8,468,287	6,351,215
Delaware	962,541	2,542,102	1,906,577
District of Columbia	962,541	2,231,520	1,673,640
Florida	11,822,948	27,302,997	20,477,248
Georgia	3,787,798	19,640,764	14,730,573
Hawaii	962,541	2,891,287	2,168,465
Idaho	962,541	4,187,427	3,140,570
Illinois	9,849,359	18,549,432	13,912,074
Indiana	3,127,977	13,862,164	10,396,623
Iowa	1,095,043	6,775,595	5,081,696
Kansas	1,183,273	6,518,777	4,889,083
Kentucky	1,483,273	9,325,003	6,993,752
Louisiana	2,588,202	8,893,001	6,669,751
Maine	962,541	2,989,547	2,242,160
Maryland	4,160,443	8,816,395	6,612,296
Massachusetts	5,495,100	10,186,705	7,640,029
Michigan	6,752,123	18,153,944	13,615,458
Minnesota	2,754,223	8,180,431	6,135,323
Mississippi	962,541	6,620,582	4,965,437
Missouri	3,232,598	13,286,108	9,964,581
Montana	962,541	5,735,180	4,301,385
Nebraska	962,541	4,460,672	3,345,504
Nevada	1,058,384	4,168,312	3,126,234
New Hampshire	962,541	2,838,185	2,128,639
New Jersey	7,701,278	14,834,907	11,126,180
New Mexico	962,541	5,485,853	4,114,390
New York	16,398,054	27,991,939	20,993,954
North Carolina	2,919,098	15,508,685	11,631,514
North Dakota	962,541	3,782,193	2,836,645
Ohio	7,733,147	18,536,527	13,902,395
Oklahoma	1,573,288	8,482,865	6,362,149
Oregon	1,649,627	6,671,822	5,003,867
Pennsylvania	8,372,668	24,815,400	18,611,550
Rhode Island	962,541	3,431,995	2,573,996
South Carolina	1,657,387	9,617,917	7,213,438
South Dakota	962,541	4,000,528	3,000,396
Tennessee	2,576,572	11,664,961	8,748,721
Texas	13,210,694	43,111,261	32,333,442
Utah	1,532,871	4,359,588	3,269,691
Vermont	962,541	2,587,234	1,940,426
Virginia	4,448,858	14,369,987	10,777,490
Washington	3,734,436	9,905,691	7,429,268
West Virginia	962,541	4,661,921	3,496,441
Wisconsin	2,863,170	11,162,733	8,372,050
Wyoming	962,541	3,955,337	2,966,503
TOTAL	$192,508,331	556,919,800	$417,689,850

a/ 75 percent of Est. (Estimated) Total SP&R Apportionment

** *Amounts may be adjusted by FHWA to incorporate the .22 percent reduction required by the FY 2001 Omnibus Consolidated Appropriations Act.*

FEDERAL TRANSIT ADMINISTRATION

TABLE 4 (REVISED)

(Revised to reflect .22 percent reduction required by the FY 2001 Omnibus Consolidated Appropriations Act, Pub. L. 106-554)

REVISED FY 2001 SECTION 5307 URBANIZED AREA FORMULA APPORTIONMENTS

URBANIZED AREA/STATE	REVISED ONE PERCENT TRANSIT ENHANCEMENT	REVISED APPORTIONMENT
OVER 1,000,000 IN POPULATION	$21,444,954	$2,144,495,422
200,000-1,000,000 IN POPULATION	4,976,118	497,611,825
50,000-200,000 IN POPULATION	----------	284,052,445
NATIONAL TOTAL	$26,421,072	$2,926,159,692

URBANIZED AREA/STATE	REVISED ONE PERCENT TRANSIT ENHANCEMENT	REVISED APPORTIONMENT
Amounts Apportioned to Urbanized Areas 1,000,000 and Over in Population:		
Atlanta, GA	$415,476	$41,547,608
Baltimore, MD	336,450	33,644,973
Boston, MA	840,117	84,011,655
Chicago, IL-Northwestern IN	1,848,736	184,873,615
Cincinnati, OH-KY	145,211	14,521,146
Cleveland, OH	251,731	25,173,121
Dallas-Fort Worth, TX	413,453	41,345,294
Denver, CO	279,126	27,912,637
Detroit, MI	357,318	35,731,804
Ft Lauderdale-Hollywood-Pompano Beach, FL.	225,826	22,582,637
Houston, TX	472,815	47,281,490
Kansas City, MO-KS	103,881	10,388,125
Los Angeles, CA	1,965,285	196,528,491
Miami-Hialeah, FL	376,618	37,661,819
Milwaukee, WI	193,630	19,363,043
Minneapolis-St. Paul, MN	323,847	32,384,711
New Orleans, LA	160,138	16,013,789
New York, NY-Northeastern NJ	6,038,347	603,834,448
Norfolk-Virginia Beach-Newport News, VA	132,339	13,233,890
Philadelphia, PA-NJ	1,044,406	104,440,639
Phoenix, AZ	234,662	23,466,175
Pittsburgh, PA	297,042	29,704,232
Portland-Vancouver, OR-WA	255,987	25,598,749
Riverside-San Bernardino, CA	181,927	18,192,733
Sacramento, CA	139,761	13,976,121
San Antonio, TX	192,267	19,226,706
San Diego, CA	432,579	43,257,869
San Francisco-Oakland, CA	1,156,887	115,688,724
San Jose, CA	311,315	31,131,496
San Juan, PR	362,424	36,242,368
Seattle, WA	556,700	55,670,041
St. Louis, MO-IL	243,706	24,370,580
Tampa-St. Petersburg-Clearwater, FL	158,963	15,896,258
Washington, DC-MD-VA	995,984	99,598,435
TOTAL	$21,444,954	$2,144,495,422

FEDERAL TRANSIT ADMINISTRATION

TABLE 4 (REVISED)

(Revised to reflect .22 percent reduction required by the FY 2001 Omnibus Consolidated Appropriations Act, Pub. L. 106-554)

REVISED FY 2001 SECTION 5307 URBANIZED AREA FORMULA APPORTIONMENTS

URBANIZED AREA/STATE	REVISED ONE PERCENT TRANSIT ENHANCEMENT	REVISED APPORTIONMENT
Amounts Apportioned to Urbanized Areas 200,000 to 1,000,000 in population		
Akron, OH	$62,108	$6,210,822
Albany-Schenectady-Troy, NY	64,165	6,416,492
Albuquerque, NM	51,640	5,164,005
Allentown-Bethlehem-Easton, PA-NJ	49,755	4,975,525
Anchorage, AK	25,524	2,552,406
Ann Arbor, MI	32,646	3,264,551
Augusta, GA-SC	18,695	1,869,535
Austin, TX	114,511	11,451,135
Bakersfield, CA	37,569	3,756,906
Baton Rouge, LA	36,884	3,688,377
Birmingham, AL	40,267	4,026,697
Bridgeport-Milford, CT	70,650	7,065,026
Buffalo-Niagara Falls, NY	118,265	11,826,480
Canton, OH	33,230	3,323,017
Charleston, SC	28,662	2,866,223
Charlotte, NC	72,367	7,236,726
Chattanooga, TN-GA	22,721	2,272,113
Colorado Springs, CO	37,814	3,781,430
Columbia, SC	26,974	2,697,421
Columbus, GA-AL	16,246	1,624,635
Columbus, OH	112,290	11,228,996
Corpus Christi, TX	35,215	3,521,536
Davenport-Rock Island-Moline, IA-IL	27,988	2,798,763
Dayton, OH	114,526	11,452,598
Daytona Beach, FL	29,348	2,934,763
Des Moines, IA	27,062	2,706,222
Durham, NC	36,188	3,618,819
El Paso, TX-NM	81,462	8,146,156
Fayetteville, NC	18,198	1,819,793
Flint, MI	51,783	5,178,254
Fort Myers-Cape Coral, FL	26,231	2,623,094
Fort Wayne, IN	20,193	2,019,274
Fresno, CA	54,662	5,466,205
Grand Rapids, MI	45,377	4,537,701
Greenville, SC	14,065	1,406,504
Harrisburg, PA	31,931	3,193,133
Hartford-Middletown, CT	92,837	9,283,678
Honolulu, HI	212,802	21,279,811
Indianapolis, IN	90,358	9,035,831
Jackson, MS	18,854	1,885,428
Jacksonville, FL	79,757	7,975,704
Knoxville, TN	25,842	2,584,176
Lansing-East Lansing, MI	33,994	3,399,402
Las Vegas, NV	162,194	16,219,360
Lawrence-Haverhill, MA-NH	33,571	3,357,076
Lexington-Fayette, KY	23,199	2,319,905

FEDERAL TRANSIT ADMINISTRATION

TABLE 4 (REVISED)

(Revised to reflect .22 percent reduction required by the FY 2001 Omnibus Consolidated Appropriations Act, Pub. L. 106-554)

REVISED FY 2001 SECTION 5307 URBANIZED AREA FORMULA APPORTIONMENTS

URBANIZED AREA/STATE	REVISED ONE PERCENT TRANSIT ENHANCEMENT	REVISED APPORTIONMENT
Amounts Apportioned to Urbanized Areas 200,000 to 1,000,000 in population (continued)		
Little Rock-North Little Rock, AR	28,633	2,863,344
Lorain-Elyria, OH	14,808	1,480,798
Louisville, KY-IN	108,939	10,893,886
Madison, WI	49,529	4,952,940
McAllen-Edinburg-Mission, TX	15,217	1,521,710
Melbourne-Palm Bay, FL	22,408	2,240,807
Memphis, TN-AR-MS	94,625	9,462,493
Mobile, AL	21,443	2,144,347
Modesto, CA	29,678	2,967,847
Montgomery, AL	12,397	1,239,658
Nashville, TN	49,009	4,900,908
New Haven-Meriden, CT	115,082	11,508,195
Ogden, UT	31,722	3,172,234
Oklahoma City, OK	50,325	5,032,519
Omaha, NE-IA	54,519	5,451,932
Orlando, FL	153,176	15,317,602
Oxnard-Ventura, CA	68,858	6,885,762
Pensacola, FL	20,553	2,055,300
Peoria, IL	21,580	2,157,959
Providence-Pawtucket, RI-MA	159,465	15,946,526
Provo-Orem, UT	30,691	3,069,066
Raleigh, NC	27,912	2,791,205
Reno, NV	32,742	3,274,158
Richmond, VA	63,783	6,378,276
Rochester, NY	71,787	7,178,709
Rockford, IL	18,997	1,899,739
Salt Lake City, UT	122,976	12,297,576
Sarasota-Bradenton, FL	40,130	4,013,020
Scranton-Wilkes-Barre, PA	32,272	3,227,198
Shreveport, LA	25,184	2,518,411
South Bend-Mishawaka, IN-MI	31,075	3,107,453
Spokane, WA	50,821	5,082,128
Springfield, MA-CT	60,009	6,000,940
Stockton, CA	50,401	5,040,120
Syracuse, NY	46,199	4,619,923
Tacoma, WA	115,485	11,548,531
Toledo, OH-MI	50,857	5,085,723
Trenton, NJ-PA	45,190	4,518,991
Tucson, AZ	81,167	8,116,666
Tulsa, OK	45,811	4,581,113
West Palm Beach-Boca Raton-Delray Bch, FL	168,178	16,817,806
Wichita, KS	31,331	3,133,147
Wilmington, DE-NJ-MD-PA	81,070	8,107,031
Worcester, MA-CT	43,817	4,381,692
Youngstown-Warren, OH	25,647	2,564,732
TOTAL	$4,976,118	$497,611,825

FEDERAL TRANSIT ADMINISTRATION

TABLE 4 (REVISED)

(Revised to reflect .22 percent reduction required by the FY 2001 Omnibus Consolidated Appropriations Act, Pub. L. 106-554)

REVISED FY 2001 SECTION 5307 URBANIZED AREA FORMULA APPORTIONMENTS

URBANIZED AREA/STATE	REVISED APPORTIONMENT
Amounts Apportioned to State Governors for Urbanized Areas 50,000 to 200,000 in Population	
ALABAMA:	$5,278,363
Anniston, AL	509,135
Auburn-Opelika, AL	408,479
Decatur, AL	466,200
Dothan, AL	391,571
Florence, AL	545,520
Gadsden, AL	482,148
Huntsville	1,530,550
Tuscaloosa, AL	944,760
ALASKA:	$0
ARIZONA:	$1,381,643
Flagstaff, AZ	543,541
Yuma, AZ-CA (AZ)	838,102
ARKANSAS:	$2,016,713
Fayetteville-Springdale, AR	556,577
Fort Smith, AR-OK (AR)	757,654
Pine Bluff, AR	512,007
Texarkana, TX-AR (AR)	190,475
CALIFORNIA:	$30,891,467
Antioch-Pittsburg, CA	1,746,987
Chico, CA	762,770
Davis, CA	925,955
Fairfield, CA	1,124,605
Hemet-San Jacinto, CA	938,254
Hesperia-Apple Valley-Victorville, CA	1,196,938
Indio-Coachella, CA	567,336
Lancaster-Palmdale, CA	2,013,282
Lodi, CA	788,190
Lompoc, CA	484,070
Merced, CA	860,583
Napa, CA	899,216
Palm Springs, CA	1,120,272
Redding, CA	647,760
Salinas, CA	1,704,595
San Luis Obispo, CA	807,236
Santa Barbara, CA	2,637,088
Santa Cruz, CA	1,363,608
Santa Maria, CA	1,240,624
Santa Rosa, CA	2,405,433
Seaside-Monterey, CA	1,616,401
Simi Valley, CA	1,530,039
Vacaville, CA	928,846
Visalia	1,060,945
Watsonville, CA	584,493
Yuba City, CA	932,621
Yuma, AZ-CA (CA)	3,320

FEDERAL TRANSIT ADMINISTRATION

TABLE 4 (REVISED)

(Revised to reflect .22 percent reduction required by the FY 2001 Omnibus Consolidated Appropriations Act, Pub. L. 106-554)

REVISED FY 2001 SECTION 5307 URBANIZED AREA FORMULA APPORTIONMENTS

URBANIZED AREA/STATE	REVISED APPORTIONMENT
COLORADO:	$5,692,056
Boulder, CO	1,266,568
Fort Collins, C0	1,054,930
Grand Junction, CO	600,636
Greeley, CO	843,750
Longmont, CO	768,901
Pueblo, CO	1,157,271
CONNECTICUT:	$21,397,335
Bristol, CT	897,155
Danbury, CT-NY (CT)	3,809,822
New Britain, CT	1,679,915
New London-Norwich, CT	1,351,839
Norwalk, CT	3,990,554
Stamford, CT-NY (CT)	4,893,037
Waterbury, CT	4,775,013
DELAWARE:	$429,424
Dover, DE	429,424
FLORIDA:	$13,087,889
Deltona, FL	435,168
Fort Pierce, F	1,042,434
Fort Walton Beach, FL	1,010,504
Gainesville, FL	1,295,025
Kissimmee, FL	603,183
Lakeland, FL	1,323,909
Naples, FL	871,312
Ocala, FL	585,301
Panama City, FL	878,376
Punta Gorda, FL	574,405
Spring Hill, FL	439,102
Stuart, FL	766,158
Tallahassee, FL	1,476,263
Titusville, FL.	422,592
Vero Beach, FL	535,197
Winter Haven, FL.	828,960
GEORGIA:	$5,730,208
Albany, GA.	709,758
Athens, GA.	680,495
Brunswick, GA	391,602
Macon, GA.	1,272,131
Rome, GA.	399,216
Savannah, GA	1,664,449
Warner Robins, GA	612,557
HAWAII:	$1,522,938
Kailua, HI	1,522,938

FEDERAL TRANSIT ADMINISTRATION

TABLE 4 (REVISED)

(Revised to reflect .22 percent reduction required by the FY 2001 Omnibus Consolidated Appropriations Act, Pub. L. 106-554)

REVISED FY 2001 SECTION 5307 URBANIZED AREA FORMULA APPORTIONMENTS

URBANIZED AREA/STATE	REVISED APPORTIONMENT
IDAHO:	$3,014,169
Boise City, ID	1,844,412
Idaho Falls, ID	661,186
Pocatello, ID	508,571
ILLINOIS:	$13,806,407
Alton, IL	746,140
Aurora, IL	2,089,719
Beloit, WI-IL (IL)	95,363
Bloomington-Normal, IL	1,202,033
Champaign-Urbana, IL	1,696,302
Crystal Lake, IL	681,085
Decatur, IL	954,855
Dubuque, IA-IL (IL)	22,242
Elgin, IL	1,507,421
Joliet, IL	1,743,016
Kankakee, IL.	684,084
Round Lake Beach-McHenry, IL-WI (IL)	992,670
Springfield, IL.	1,391,477
INDIANA:	$8,052,497
Anderson, IN	650,871
Bloomington, IN	971,259
Elkhart-GosheN, IN	973,448
Evansville, IN-KY (IN)	1,803,305
Kokomo, IN	655,450
Lafayette-West Lafayette, IN	1,303,073
Muncie, IN	957,923
Terre Haute, IN	737,168
IOWA:	$4,383,685
Cedar Rapids, IA	1,362,303
Dubuque, IA-IL (IA)	663,084
Iowa City, IA	784,924
Sioux City, IA-NE-SD (IA)	724,956
Waterloo-Cedar Falls, IA	848,418
KANSAS:	$2,128,415
Lawrence, KS	805,986
St. Joseph, MO-KS (KS)	6,653
Topeka, KS	1,315,776
KENTUCKY:	$1,677,539
Clarksville, TN-KY (KY)	204,695
Evansville, IN-KY (KY)	251,359
Huntington-Ashland, WV-KY-OH ((KY)	501,253
Owensboro, KY	720,232
LOUISIANA:	$4,968,188
Alexandria, LA	725,000
Houma, LA	509,964
Lafayette, LA	1,254,426
Lake Charles, LA	1,007,659
Monroe, LA	958,130
Slidell, LA	513,009

FEDERAL TRANSIT ADMINISTRATION

TABLE 4 (REVISED)

(Revised to reflect .22 percent reduction required by the FY 2001 Omnibus Consolidated Appropriations Act, Pub. L. 106-554)

REVISED FY 2001 SECTION 5307 URBANIZED AREA FORMULA APPORTIONMENTS

URBANIZED AREA/STATE	REVISED APPORTIONMENT
MAINE:	$2,162,245
Bangor, ME	444,305
Lewiston-Auburn, ME	516,276
Portland, ME	1,103,916
Portsmouth-Dover-Rochester, NH-ME (ME)	97,748
MARYLAND:	$2,404,523
Annapolis, MD	783,156
Cumberland, MD-WV (MD)	416,526
Frederick, MD	565,086
Hagerstown, MD-PA-WV (MD)	639,755
MASSACHUSETTS	$9,523,005
Brockton, MA	1,739,570
Fall River, MA-RI (MA)	1,696,646
Fitchburg-Leominster, MA	687,556
Hyannis, MA	490,988
Lowell, MA-NH (MA)	2,153,315
New Bedford, MA	1,865,952
Pittsfield, MA	444,459
Taunton, MA	444,519
MICHIGAN:	$8,126,553
Battle Creek, MI	678,720
Bay City, MI	758,240
Benton Harbor, MI	548,455
Holland, MI	615,540
Jackson, MI	757,823
Kalamazoo, MI	1,636,484
Muskegon, MI	998,188
Port Huron, MI	656,927
Saginaw, MI	1,476,176
MINNESOTA:	$2,896,066
Duluth, MN-WI (MN)	704,739
Fargo-Moorhead, ND-MN (MN)	407,485
Grand Forks, ND-MN (MN)	89,307
La Crosse, WI-MN (MN)	43,748
Rochester, MN	794,873
St. Cloud, MN	855,914
MISSISSIPPI:	$2,486,331
Biloxi-Gulfport, MS	1,539,359
Hattiesburg, MS	479,773
Pascagoula, MS	467,199
MISSOURI:	$3,426,198
Columbia, MO	676,419
Joplin, MO	475,034
Springfield, MO	1,595,748
St. Joseph, MO-KS (MO)	678,997

FEDERAL TRANSIT ADMINISTRATION

TABLE 4 (REVISED)

(Revised to reflect .22 percent reduction required by the FY 2001 Omnibus Consolidated Appropriations Act, Pub. L. 106-554)

REVISED FY 2001 SECTION 5307 URBANIZED AREA FORMULA APPORTIONMENTS

URBANIZED AREA/STATE	REVISED APPORTIONMENT
MONTANA:	$2,280,824
Billings, MT	879,622
Great Falls, MT	820,265
Missoula, MT	580,937
NEBRASKA:	$2,535,576
Lincoln, NE	2,425,891
Sioux City, IA-NE-SD (NE)	109,685
NEVADA:	$0
NEW HAMPSHIRE:	$3,079,104
Lowell, MA-NH (NH)	6,302
Manchester, NH	1,290,809
Nashua, NH	1,032,218
Portsmouth-Dover-Rochester, NH-ME (NH)	749,775
NEW JERSEY:	$2,332,990
Atlantic City, NJ	1,681,550
Vineland-Millville, NJ	651,440
NEW MEXICO:	$1,270,439
Las Cruces, NM	705,734
Santa Fe, NM	564,705
NEW YORK:	$7,048,802
Binghamton, NY	1,769,276
Danbury, CT-NY (NY)	23,981
Elmira, NY	726,521
Glens Falls, NY	499,617
Ithaca, NY	504,253
Newburgh, NY	654,788
Poughkeepsie, NY	1,375,468
Stamford, CT-NY (NY)	163
Utica-Rome, NY	1,494,735
NORTH CAROLINA:	$11,443,058
Asheville, NC	883,259
Burlington, NC	640,729
Gastonia, NC	938,180
Goldsboro, NC	487,220
Greensboro, NC	2,017,840
Greenville, NC	560,980
Hickory, NC	535,021
High Point, NC	902,244
Jacksonville, NC	871,082
Kannapolis, NC	628,846
Rocky Mount, NC	502,686
Wilmington, NC	822,212
Winston-Salem, NC	1,652,759

FEDERAL TRANSIT ADMINISTRATION

TABLE 4 (REVISED)

(Revised to reflect .22 percent reduction required by the FY 2001 Omnibus Consolidated Appropriations Act, Pub. L. 106-554)

REVISED FY 2001 SECTION 5307 URBANIZED AREA FORMULA APPORTIONMENTS

URBANIZED AREA/STATE	REVISED APPORTIONMENT
NORTH DAKOTA:	$2,223,367
Bismarck, ND	641,125
Fargo-Moorhead, ND-MN (ND)	927,232
Grand Forks, ND-MN (ND)	655,010
OHIO:	$6,113,229
Hamilton, OH	1,263,551
Huntington-Ashland, WV-KY-OH (OH)	321,767
Lima, OH	690,571
Mansfield, OH	666,719
Middletown, OH	868,759
Newark, OH	529,325
Parkersburg, WV-OH (OH)	78,381
Sharon, PA-OH (OH)	51,686
Springfield, OH	1,004,920
Steubenville-Weirton, OH-WV-PA (OH)	361,533
Wheeling, WV-OH (OH)	276,017
OKLAHOMA:	$951,491
Fort Smith, AR-OK (OK)	16,692
Lawton, OK	934,799
OREGON:	$4,962,001
Eugene-Springfield, OR	2,335,722
Longview, WA-OR (OR)	15,534
Medford, OR	721,846
Salem, OR	1,888,899
PENNSYLVANIA:	$12,971,554
Altoona, PA	886,137
Erie, PA	2,279,569
Hagerstown, MD-PA-WV (PA)	7,809
Johnstown, PA	817,157
Lancaster, PA	2,061,026
Monessen, PA	560,887
Pottstown, PA	532,251
Reading, PA	2,405,887
Sharon, PA-OH (PA)	372,626
State College, PA	775,523
Steubenville-Weirton, OH-WV-PA (PA)	2,708
Williamsport, PA	650,097
York, PA	1,619,877
PUERTO RICO:	$11,982,972
Aguadilla, PR	1,048,349
Arecibo, PR	979,551
Caguas, PR	2,565,304
Cayey, PR	758,465
Humacao, PR	656,437
Mayaguez, PR	1,410,354
Ponce, PR	3,138,462
Vega Baja-Manati, PR	1,426,050

FEDERAL TRANSIT ADMINISTRATION

TABLE 4 (REVISED)

(Revised to reflect .22 percent reduction required by the FY 2001 Omnibus Consolidated Appropriations Act, Pub. L. 106-554)

REVISED FY 2001 SECTION 5307 URBANIZED AREA FORMULA APPORTIONMENTS

URBANIZED AREA/STATE	REVISED APPORTIONMENT
RHODE ISLAND:	$762,750
Fall River, MA-RI (RI)	174,855
Newport, RI	587,895
SOUTH CAROLINA:	$3,230,163
Anderson, SC	434,431
Florence, SC	446,846
Myrtle Beach, SC	468,602
Rock Hill, SC	497,555
Spartanburg, SC	867,347
Sumter, SC	515,382
SOUTH DAKOTA:	$1,603,871
Rapid City, SD	510,809
Sioux City, IA-NE-SD (SD)	14,322
Sioux Falls, SD	1,078,740
TENNESSEE:	$2,482,276
Bristol, TN-Bristol, VA (TN)	232,018
Clarksville, TN-KY (TN)	565,700
Jackson, TN	428,181
Johnson City, TN	652,687
Kingsport, TN-VA (TN)	603,690
TEXAS:	$22,983,599
Abilene, TX	815,421
Amarillo, TX	1,512,424
Beaumont, TX	1,040,218
Brownsville, TX	1,511,921
Bryan-College Station, TX	1,012,744
Denton, TX	547,056
Galveston, TX	580,302
Harlingen, TX	743,069
Killeen, TX	1,421,285
Laredo, TX	1,795,032
Lewisville, TX	631,529
Longview, TX	621,346
Lubbock, TX	1,769,558
Midland, TX	775,332
Odessa, TX	860,125
Port Arthur, TX	938,265
San Angelo, TX	806,249
Sherman-Denison, TX	403,580
Temple, TX	458,175
Texarkana, TX-AR (TX)	369,711
Texas City, TX	982,761
Tyler, TX	768,492
Victoria, TX	532,736
Waco, TX	1,160,581
Wichita Falls, TX	925,687

FEDERAL TRANSIT ADMINISTRATION

TABLE 4 (REVISED)

(Revised to reflect .22 percent reduction required by the FY 2001 Omnibus Consolidated Appropriations Act, Pub. L. 106-554)

REVISED FY 2001 SECTION 5307 URBANIZED AREA FORMULA APPORTIONMENTS

URBANIZED AREA/STATE	REVISED APPORTIONMENT
UTAH:	$459,370
Logan, UT	459,370
VERMONT:	$806,059
Burlington, VT	806,059
VIRGINIA:	$5,350,576
Bristol, TN-Bristol, VA (VA)	165,181
Charlottesville, VA	769,358
Danville, VA	436,903
Fredericksburg, VA	512,936
Kingsport, TN-VA (VA)	31,186
Lynchburg, VA	731,930
Petersburg, VA	927,886
Roanoke, VA	1,775,196
WASHINGTON:	$5,056,385
Bellingham, WA	595,741
Bremerton, WA	1,154,063
Longview, WA-OR (WA)	504,093
Olympia, WA	897,869
Richland-Kennewick-Pasco, WA	936,677
Yakima, WA	967,942
WEST VIRGINIA	$3,886,087
Charleston, WV	1,563,309
Cumberland, MD-WV (WV)	18,697
Hagerstown, MD-PA-WV (WV)	4,722
Huntington-Ashland, WV-KY-OH (WV)	877,703
Parkersburg, WV-OH (WV)	564,475
Steubenville-Weirton, OH-WV-PA (WV)	242,862
Wheeling, WV-OH (WV)	614,319
WISCONSIN:	$10,638,317
Appleton-Neenah, WI	1,948,064
Beloit, WI-IL (WI)	417,571
Duluth, MN-WI (WI)	182,907
Eau Claire, WI	763,031
Green Bay, WI	1,479,567
Janesville, WI	561,548
Kenosha, WI	1,022,469
La Crosse, WI-MN (WI)	811,721
Oshkosh, WI	708,405
Racine, WI	1,579,204
Round Lake Beach-McHenry, IL-WI (WI)	592
Sheboygan, WI	667,446
Wausau, WI	495,792
WYOMING:	$1,113,728
Casper, WY	510,895
Cheyenne, WY	602,833
TOTAL	$284,052,445

FEDERAL TRANSIT ADMINISTRATION

TABLE 5 (REVISED)

(Revised to reflect .22 percent reduction required by the FY 2001 Omnibus Consolidated Appropriations Act, Pub. L. 106-554)

REVISED FY 2001 SECTION 5311 NONURBANIZED AREA FORMULA APPORTIONMENTS, AND SECTION 5311(b) RURAL TRANSIT ASSISTANCE PROGRAM (RTAP) ALLOCATIONS

STATE	REVISED SECTION 5311 APPORTIONMENT	REVISED SECTION 5311(b) APPORTIONMENT
Alabama	$4,908,405	$113,952
Alaska	731,949	72,300
America Samoa	104,325	11,040
Arizona	2,148,770	86,430
Arkansas	3,924,065	104,135
California	9,577,365	160,516
Colorado	2,044,385	85,389
Connecticut	1,854,450	83,495
Delaware	462,640	69,614
Florida	6,156,753	126,402
Georgia	7,176,610	136,573
Guam	296,991	12,962
Hawaii	805,465	73,033
Idaho	1,625,002	81,206
Illinois	6,584,138	130,665
Indiana	6,360,128	128,430
Iowa	4,090,897	105,799
Kansas	3,254,179	97,454
Kentucky	5,371,940	118,575
Louisiana	4,442,983	109,310
Maine	2,143,913	86,382
Maryland	2,676,572	91,694
Massachusetts	2,868,472	93,608
Michigan	7,768,311	142,474
Minnesota	4,470,214	109,582
Mississippi	4,362,349	108,506
Missouri	5,206,649	116,927
Montana	1,316,379	78,128
Nebraska	1,986,250	84,809
Nevada	648,480	71,467
New Hampshire	1,717,006	82,124
New Jersey	2,454,955	89,484
New Mexico	1,929,966	84,248
New York	8,641,736	151,185
North Carolina	9,180,077	156,554
North Dakota	973,521	74,709
Northern Marianas	96,679	10,964
Ohio	9,345,956	158,209
Oklahoma	3,995,300	104,846
Oregon	3,172,303	96,638
Pennsylvania	10,425,512	168,975
Puerto Rico	3,115,471	96,071
Rhode Island	399,097	68,980
South Carolina	4,594,674	110,823
South Dakota	1,186,647	76,835
Tennessee	5,931,199	124,153
Texas	12,522,412	189,890
Utah	899,544	73,971
Vermont	1,060,965	75,581
Virgin Islands	227,081	12,265
Virginia	5,258,583	117,445
Washington	3,684,623	101,747
West Virginia	3,132,991	96,246
Wisconsin	5,413,442	118,989
Wyoming	757,131	72,551
TOTAL	$205,485,900	$5,404,340

FEDERAL TRANSIT ADMINISTRATION

TABLE 6 (REVISED)

(Revised to reflect .22 percent reduction required by the FY 2001 Omnibus Consolidated Appropriations Act, Pub. L. 106-554)

REVISED FY 2001 SECTION 5310 ELDERLY AND PERSONS WITH DISABILITIES APPORTIONMENTS

STATE	REVISED APPORTIONMENT
Alabama	$1,341,753
Alaska	196,516
America Samoa	52,816
Arizona	1,180,931
Arkansas	932,236
California	7,346,082
Colorado	912,066
Connecticut	1,047,673
Delaware	305,530
District of Columbia	303,134
Florida	4,951,449
Georgia	1,745,026
Guam	134,366
Hawaii	393,408
Idaho	403,008
Illinois	3,194,583
Indiana	1,667,808
Iowa	1,003,498
Kansas	838,458
Kentucky	1,285,158
Louisiana	1,289,372
Maine	508,257
Maryland	1,295,552
Massachusetts	1,873,732
Michigan	2,730,678
Minnesota	1,314,065
Mississippi	905,187
Missouri	1,691,587
Montana	368,311
Nebraska	586,015
Nevada	431,507
New Hampshire	406,684
New Jersey	2,253,028
New Mexico	513,285
New York	5,243,663
North Carolina	1,986,974
North Dakota	310,931
Northern Marianas	52,572
Ohio	3,334,681
Oklahoma	1,106,654
Oregon	1,027,623
Pennsylvania	4,001,593
Puerto Rico	973,945
Rhode Island	450,473
South Carolina	1,069,122
South Dakota	337,161
Tennessee	1,587,436
Texas	4,133,366
Utah	477,138
Vermont	275,698
Virgin Islands	136,892
Virginia	1,652,110
Washington	1,479,903
West Virginia	776,535
Wisconsin	1,511,269
Wyoming	231,908
TOTAL	$77,560,406

FEDERAL TRANSIT ADMINISTRATION

TABLE 7 (REVISED)

(Revised to reflect .22 percent reduction required by the FY 2001 Omnibus Consolidated Appropriations Act, Pub. L. 106-554)

REVISED FY 2001 SECTION 5309 FIXED GUIDEWAY MODERNIZATION APPORTIONMENTS

STATE	AREA	REVISED APPORTIONMENT
AZ	Phoenix	$1,439,247
CA	Los Angeles	25,832,813
CA	Oxnard-Ventura	593,945
CA	Riverside-San Bernardino	1,217,356
CA	Sacramento	2,880,051
CA	San Diego	8,835,470
CA	San Francisco	62,273,197
CA	San Jose	12,708,658
CO	Denver	1,495,770
CT	Hartford	1,297,716
CT	Southwestern Connecticut	36,386,919
DE	Wilmington	800,223
DC	Washington	52,668,996
FL	Ft. Lauderdale	2,551,710
FL	Jacksonville	100,405
FL	Miami	9,862,459
FL	Tampa	56,542
FL	West Palm Beach	2,375,585
GA	Atlanta	21,119,647
HI	Honolulu	926,871
IL	Chicago/Northwestern Indiana	126,992,048
IN	South Bend	599,579
LA	New Orleans	2,824,580
MD	Baltimore	7,909,585
MD	Baltimore Commuter Rail	16,990,551
MA	Boston	64,110,648
MA	Lawrence-Haverhill	1,401,297
MI	Detroit	337,140
MN	Minneapolis	3,698,909
MO	Kansas City	25,009
MO	St. Louis	3,428,458
NJ	Northeastern New Jersey	79,530,870
NJ	Trenton	1,253,909
NY	Buffalo	1,213,986
NY	New York	333,140,133
OH	Cleveland	12,361,276
OH	Dayton	4,397,228
OR	Portland	3,483,792
PA	Harrisburg	454,285
PA	Philadelphia/Southern New Jersey	88,363,302
PA	Pittsburgh	19,990,127
PR	San Juan	2,042,249
RI/MA	Providence	2,358,756
TN	Chattanooga	78,059
TN	Memphis	172,006
TX	Dallas	836,245
TX	Houston	6,136,712
VA	Norfolk	1,031,613
WA	Seattle	16,455,803
WA	Tacoma	707,077
WI	Madison	691,930
	TOTAL	$1,048,440,742

FEDERAL TRANSIT ADMINISTRATION

TABLE 8 (REVISED)

(Revised to reflect .22 percent reduction required by the FY 2001 Omnibus Consolidated Appropriations Act, Pub. L. 106-554)

REVISED FY 2001 SECTION 5309 NEW STARTS ALLOCATIONS

STATE	PROJECT LOCATION AND DESCRIPTION	REVISED ALLOCATION
AK/HI	Alaska or Hawaii Ferry Projects	$10,302,689
AK	Girdwood to Wasilla, Alaska, Commuter Rail Project	14,859,647
AL	Birmingham, Alabama, Transit Corridor	4,953,216
AR	Little Rock, Arkansas, River Rail Project	2,971,930
AZ	Phoenix Metropolitan Area Transit Project	9,906,431
CA	Hollister/Gilroy Branch Line Rail Extension Project	990,644
CA	Los Angeles Mid-City and East Side Corridors Projects	1,981,286
CA	Los Angeles North Hollywood Extension Project	49,532,158
CA	Los Angeles-San Diego LOSSAN Corridor Project	2,971,930
CA	Oceanside-Escondido, California, Light Rail Extension Project	9,906,431
CA	Orange County, California, Transitway Project	1,981,286
CA	Sacramento, California, South Corridor LRT Project	34,870,640
CA	San Bernardino, California, Metrolink Project	990,644
CA	San Diego Mission Valley East Light Rail Project	31,205,260
CA	San Francisco BART Extension to the Airport Project	79,251,454
CA	San Jose Tasman West Light Rail Project	12,135,379
CA	Stockton, California, Altamont Commuter Rail Project	5,943,859
CO	Colorado Roaring Fork Valley Project	990,644
CO	Denver Southeast Corridor Project	2,971,930
CO	Denver Southwest Corridor Project	20,010,993
CT	Stamford, Connecticut, Fixed Guideway Corridor	7,925,145
DE	Wilmington, Delaware, Downtown Transit Corridor Project	4,953,216
FL	Central Florida Commuter Rail Project	2,971,930
FL	Fort Lauderdale, Florida, Tri-County Commuter Rail Project	14,859,647
GA	Atlanta, Georgia, North Line Extension Project	24,766,080
HI	Honolulu, Hawaii, Bus Rapid Transit Project	2,476,608
IL	Chicago METRA Commuter Rail Projects	34,672,511
IL	Chicago Ravenswood and Douglas Branch Reconstruction Projects	14,859,647
IN	Indianapolis, Indiana Northeast-Downtown Corridor Project	2,971,930
IN	Northern Indiana South Shore Commuter Rail Project	1,981,286
KS	Johnson County, Kansas I-35 Commuter Rail Project	990,644
MA	Boston South Boston Piers Transitway Project	24,766,080
MA	Boston Urban Ring Project	990,644
MA	Lowell, Massachusetts-Nashua, New Hampshire Commuter Rail Project	1,981,286
MA	Massachusetts North Shore Corridor Project	990,644
MD	Baltimore Central LRT Double Track Project	2,971,930
MD	MARC expansion projects -- Penn-Camden Lines Connector and Midday Storage Facility	9,906,431
MD	Washington Metro Blue Line Extension - Addison Road (Largo) Project	7,429,824
ME	Calais, Maine, Branch Line Regional Transit Program	990,644
ME	Portland, Maine, Marine Highway Program	1,981,286
MI	Detroit, Michigan, Metropolitan Airport Light Rail Project	495,321
MN	Twin Cities Transitways Projects	4,953,216
MN	Twin Cities Transitways -- Hiawatha Corridor Project	49,532,158
MO	Kansas City, Missouri, Southtown Corridor Project	3,467,251
MO	St. Louis, Missouri MetroLink, Cross County Connector Project	990,644
MO	St. Louis - St. Clair MetroLink Extension Project	59,438,590
NC	Charlotte, North Carolina, North Corridor and South Corridor Transitway Projects	4,953,216
NC	Raleigh-Durham-Chapel Hill Triangle Transit Project	9,906,431
NJ	Newark-Elizabeth Rail Link Project	6,934,502
NJ	*Newark-Elizabeth Rail Link Project*	*2,970,949* a/

FEDERAL TRANSIT ADMINISTRATION

TABLE 8 (REVISED)

(Revised to reflect .22 percent reduction required by the FY 2001 Omnibus Consolidated Appropriations Act, Pub. L. 106-554)

REVISED FY 2001 SECTION 5309 NEW STARTS ALLOCATIONS

STATE	PROJECT LOCATION AND DESCRIPTION	REVISED ALLOCATION
NJ	New Jersey Hudson Bergen Project	119,867,821
NJ	Northwest New Jersey-Northeast Pennsylvania Passenger Rail Project	990,644
NJ	West Trenton, New Jersey, Rail Project	1,981,286
NM	Albuquerque/Greater Albuquerque Mass Transit Project	495,321
NM	Santa Fe-Eldorado, New Mexico, Rail Link Project	1,485,965
NV	Clark County, Nevada, RTC Fixed Guideway Project	1,485,965
NY	Long Island Railroad East Side Access Project	7,925,145
NY	Whitehall and St. George Ferry Terminal Projects	2,476,608
OH	Canton-Akron-Cleveland Commuter Rail Project	1,981,286
OH	Cleveland Euclid Corridor Improvement Project	3,962,572
OR	Portland- Interstate MAX LRT Extension Project	7,429,824
OR	Wilsonville to Washington County, Oregon, Commuter Rail Project	990,644
PA	Harrisburg-Lancaster Capital Area Transit Corridor 1 Commuter Rail Project	495,321
PA	Philadelphia-Reading SEPTA Schuylkill Valley Metro Project	9,906,431
PA	Philadelphia SEPTA Cross County Metro Project	1,981,286
PA	Pittsburgh North Shore- Central Business District Corridor Project	4,953,216
PA	Pittsburgh Stage II Light Rail Project	11,887,718
PR	San Juan Tren Urbano Project	74,298,238
RI	Rhode Island-Pawtucket and T.F. Green Commuter Rail and Maintenance Facility	495,321
TN	Memphis, Tennessee, Medical Center Rail Extension Project	5,943,859
TN	Nashville, Tennessee, Regional Commuter Rail Project	5,943,859
TX	Austin, Texas Capital Metro Light Rail Project	990,644
TX	Dallas North Central Light Rail Extension Project	69,345,021
TX	*Dallas Southeast Corridor Light Rail*	*997,800* a/
TX	Galveston, Texas, Rail Trolley Extension Project	990,644
TX	Houston Advanced Transit Project	2,476,608
TX	Houston Regional Bus Project	10,649,414
UT	Salt Lake City - University Light Rail Line Project	1,981,286
VA	Dulles Corridor Project	49,532,158
VA	Virginia Railway Express Commuter Rail Project	2,971,930
VT	Burlington-Bennington (ABRB), Vermont Commuter Rail Project	1,981,286
WA	Puget Sound RTA Sound Commuter Rail Project	4,953,216
WA	Seattle, Washington, Central Link LRT Project	49,532,158
WA	Spokane, Washington, South Valley Corridor Light Rail Project	3,962,572
WI	Kenosha-Racine-Milwaukee Rail Extension Project	3,962,572
	TOTAL ALLOCATION	$1,079,113,781

a/ Funding for project made available under the FY 2001 Omnibus Consolidated Appropriations Act, Pub. L. 106-554.

FEDERAL TRANSIT ADMINISTRATION

TABLE 8A (REVISED) **

PRIOR YEAR UNOBLIGATED SECTION 5309 NEW START ALLOCATIONS

STATE	PROJECT LOCATION AND DESCRIPTION	FY 1999 UNOBLIGATED ALLOCATIONS	FY 2000 UNOBLIGATED ALLOCATIONS	TOTAL UNOBLIGATED ALLOCATION
AK/HI	Alaska or Hawaii Ferry Projects	$10,322,550	$10,203,219	$20,525,769
AK	Girdwood, Alaska Commuter Rail Project	0	9,810,787	9,810,787
AL	Birmingham- Transit Corridor	992,550	2,943,236	3,935,786
CA	Los Angeles-Mid-City and East Side Corridors Projects	420	0	420
CA	Los Angeles-San Diego LOSSAN Corridor Project	0	981,079	981,079
CA	Riverside County-San Jacinto Branch Line Project	496,280	0	496,280
CA	San Diego- Mid-Coast Corridor Project	1,985,100	4,905,394	6,890,494
CA	Stockton-Altamont Commuter Rail	0	981,079	981,079
CA	Orange County-Transitway Project	2,481,380	981,079	3,462,459
CO	Denver-North Front Range Corridor Feasibility Study	496,280	0	496,280
CO	Roaring Fork Valley Project	0	981,079	981,079
CT	Hartford-Light Rail Project	888,830	0	888,830
CT	Hartford- Old Saybrook Project	496,280	0	496,280
CT	Metro North Danbury to Norwalk	0	2,000,000	2,000,000
CT	New London-Waterfront Access Project	496,280	0	496,280
CT	Stamford-Fixed Guideway Connector	50	981,079	981,129
DE	Wilmington-Downtown Transit Connector	0	981,079	981,079
FL	Fort Lauderdale-Tri-County Commuter Rail Project	2,970,210	9,810,787	12,780,997
FL	Miami-Dade Transit East-West Corridor Project	2,977,660	1,471,618	4,449,278
FL	Miami Metro Dade - North 27th Avenue Corridor Project	7,450	0	7,450
FL	Pinellas County-Mobility Initiative Project	0	2,452,697	2,452,697
GA	Atlanta-South Dekalb Lindbergh Light Rail Project	992,550	981,079	1,973,629
GA	Savannah-Water Taxi	496,280	0	496,280
IA	Sioux City-Micro Rail Trolley System	248,140	0	248,140
IL	Chicago Metra Commuter Rail Exts. & Upgrades	5,955,320	24,526,968	30,482,288
IL	Chicago- Ravenswood Branch Line Project	0	3,433,775	3,433,775
IN	Indianapolis-Northeast Downtown Corridor Project	0	981,079	981,079
LA	New Orleans-Desire Streetcar Project	500,000	0	500,000
MA	Boston-North Shore Corridor	2	981,079	981,081
MA	Boston-North-South Rail Link	496,280	0	496,280
MA	Boston-South Boston Piers Transitway	53,580,975	52,875,235	106,456,210
MA	Boston-Urban Ring Project	3	981,079	981,082
MA/NH	Lowell, MA - Nashua, NH Commuter Rail Project	0	981,079	981,079
MD	Baltimore Central Downtown Transit Alternatives MIS	496,280	0	496,280
MD	Baltimore-Light Rail Double Track Project	0	4,660,129	4,660,129
MD	MARC Expansion Programs [Silver Spring Intermodal Center & Penn-Camden Rail Connection]	0	735,809	735,809
ME	Calais Branch Rail Line Regional Transit Program	0	3	3
MN	Minneapolis- Transitways Hiawatha Corridor Project	0	8,547,567	8,547,567
MN	Minneapolis-Transitways Projects	0	2,943,236	2,943,236
MO	Johnson County, KS, I-35 Commuter Rail Project	11,471	981,079	992,550
MO	St. Louis-MetroLink Cross County Corridor Project	0	2,452,697	2,452,697
NC	Charlotte-North-South Corridor Transitway Project	973,260	3,924,315	4,897,575
NC	Raleigh-Durham-Chapel Hill-Triangle Transit Project	9,925,525	7,848,630	17,774,155
NE	Omaha-Trolley System	992,550	0	992,550
NJ	Trans-Hudson Midtown Corridor Study	0	4,905,394	4,905,394
NJ	Urban Core- Newark Rail Link MOS-1 Project	0	11,772,945	11,772,945
NJ	West Trenton Rail Project	0	981,079	981,079

FEDERAL TRANSIT ADMINISTRATION

TABLE 8A (REVISED) **

PRIOR YEAR UNOBLIGATED SECTION 5309 NEW START ALLOCATIONS

STATE	PROJECT LOCATION AND DESCRIPTION	FY 1999 UNOBLIGATED ALLOCATIONS	FY 2000 UNOBLIGATED ALLOCATIONS	TOTAL UNOBLIGATED ALLOCATION
NM	Greater Albuquerque Mass Transit Project	2,954,765	6,867,551	9,822,316
NM	Santa Fe/El Dorado Rail Link	0	2,943,236	2,943,236
NY	New York-Second Avenue Subway	0	3,000,000	3,000,000
NY	New York-Whitehall Ferry Terminal Reconstruction Project	0	1,962,157	1,962,157
OH	Canton-Akron-Cleveland Commuter Rail Project	0	2,452,697	2,452,697
OH	Cleveland-Berea Red Line Extension	992,550	0	992,550
OH	Cleveland-Euclid Corridor Improvement Project	0	981,079	981,079
OH	Dayton-Light Rail Study	0	981,079	981,079
OR	Portland-Wilsonville to Washington County Connection to Westside	0	490,539	490,539
PA	Harrisburg-Capital Area Transit Corridor 1 Commuter Rail	992,550	490,539	1,483,089
PA	Philadelphia-Reading SEPTA Schuylkill Valley Metro Project	2,977,660	3,924,315	6,901,975
PA	Philadelphia-SEPTA Cross County Metro	752,550	981,079	1,733,629
PA	Pittsburgh-North Shore- Central Business District Corridor	992,550	9,810,787	10,803,337
PA	Pittsburgh-Stage II Light Rail Project	3,970,210	7,848,630	11,818,840
PR	Tren Urbano	0	31,394,519	31,394,519
TN	Knoxville- Memphis Commuter Rail Feasibility Study	808,830	0	808,830
TN	Memphis-Medical Center Rail Extension Project	2,183,615	2,452,697	4,636,312
TN	Nashville-Commuter Rail Project	680,550	981,079	1,661,629
TX	Galveston-Rail Trolley Extension Project	0	1,471,618	1,471,618
TX	Houston-Advanced Transit Program	0	2,943,236	2,943,236
UT	Salt Lake City-Olympic Transportation Infrastructure Investments	0	9,810,787	9,810,787
VA	Dulles Corridor Project	16,873,400	24,526,968	41,400,368
VA	Norfolk-Virginia Beach Corridor Project	0	981,079	981,079
VA	VRE-Woodbridge Station Improvements Project	0	2,158,373	2,158,373
VT	Burlington-Essex-Commuter Rail Project	1,985,100	0	1,985,100
WA	King County-Elliott Bay Water Taxi	248,140	0	248,140
WA	Seattle-Puget Sound RTA Sounder Com. Rail Proj.	0	4,905,394	4,905,394
WA	Spokane-South Valley Corridor Light Rail Project	992,550	1,962,157	2,954,707
WI	Kenosha-Racine-Milwaukee Commuter Rail Project	0	981,079	981,079
WV	Morgantown Fixed Guideway Modernization Project	3,970,210	0	3,970,210
	TOTAL UNOBLIGATED ALLOCATION	$140,655,186	$312,281,142	$448,966,118

Fiscal Year 1997 Allocations and 1998 Allocations Extended in Conference Report 106-490

CO	*Roaring Fork Valley rail project*	*$793,530*
MS	*Jackson, Mississippi intermodal corridor*	*2,990,300*
TX	*Galveston, Texas rail trolley system project*	*1,460,730*
VA	*Virginia Railway Express-- Woodbridge station improvement project*	*2,279,069*
VT	*Burlington--Essex, Vermont commuter rail*	*2,883,828*
	Total Extended Allocations	*$10,407,457* a/

*** The table was revised to remove the Charleston, South Carolina Monobeam Corridor Project. Section 331 of the FY 2000 DOT Appropriations Act specifies that funds made available under this Act, and any prior year unobligated funds for this project shall be transferred and administered under the Transit Planning and Research account.*

a/ Period of availability for funds extended in FY 2001 Appropriations Act is one additional year and they will lapse September 30, 2001. Projects extended in Conference Report 106-490 whose funds were obligated as of September 30, 2000 are not listed.

FEDERAL TRANSIT ADMINISTRATION

TABLE 9

(Unless noted otherwise, project funding was made available under the 2001 DOT Appropriations Act. Adjustments made for the .22 percent reduction required by the FY 2001 Omnibus Consolidated Appropriations Act.)

FY 2001 SECTION 5309 BUS ALLOCATIONS

STATE	PROJECT	ALLOCATION	
AK	Alaska State Fair park and ride and passenger shuttle system	990,315	
AK	Denali Depot intermodal facility	2,970,945	
AK	Fairbanks Bus/Rail Intermodal Facility	3,069,976	
AK	Fairbanks parking garage and intermodal center	1,089,346	
AK	Homer Alaska Maritime Wildlife Refuge intermodal and welcome center	841,768	
AK	Port McKenzie intermodal facilities	7,427,361	
AK	Ship Creek pedestrian and bus facilities and intermodal center/parking garage	4,951,574	
AL	*Alabama A&M University buses and bus facilities*	*498,900*	a/
AL	Alabama State Docks intermodal passenger and freight facility	990,315	
AL	Birmingham-Jefferson County Transit Authority buses and bus facilities	990,315	
AL	Dothan--Wiregrass Transit Authority buses and bus facilities	742,736	
AL	Huntsville Space and Rocket Center intermodal center	1,980,630	
AL	Huntsville, intermodal facility	495,157	
AL	Huntsville International Airport intermodal center	4,951,574	
AL	Lanett, vans	247,579	
AL	Mobile Waterfront Terminal	4,951,574	
AL	Montgomery - Moulton Street Intermodal Facility	2,970,945	
AL	Montgomery, civil rights trail trolleys	247,579	
AL	Shelby County, vans	198,063	
AL	Statewide, bus and bus facilities	1,435,956	
AL	Lamar County vans	49,516	
AL	Tuscaloosa interdisciplinary science building parking and intermodal facility	9,407,991	
AL	University of Alabama Birmingham fuel cell buses	1,980,630	
AL	University of North Alabama, bus and bus facilities	1,980,630	
AL	University of South Alabama, buses and bus facilities	2,475,787	
AR	Central Arkansas Transit Authority, bus and bus facilities	1,044,782	
AR	Hot Springs - national park intermodal parking facility	495,157	
AR	Nevada County, vans and mini-vans	89,128	
AR	Pine Bluff, buses	287,192	
AR	River Market and College Station Livable Communities Program	1,089,346	
AR	State of Arkansas, small rural and elderly and handicapped transit buses and bus facilities	2,970,945	
AZ	Mesa bus maintenance facility - Regional Public Transportation Authority	1,980,630	
AZ	Phoenix, bus and bus facilities	4,456,416	
AZ	South Central Avenue transit center	1,980,630	
AZ	Tucson intermodal transportation center at Union Pacific Depot	2,970,945	
AZ	Tucson, bus and bus facilities	990,315	
CA	AC Transit zero-emissions fuel cell bus deployment demonstration project	990,315	
CA	Alameda Contra Costa Transit District, buses and bus facilities	495,157	
CA	Anaheim, buses and bus facilities	247,579	
CA	Brea, buses	148,547	
CA	Calabasas, buses	495,157	
CA	Contra Costa Transit Authority (County Connection), buses	495,157	
CA	City of Livermore, park and ride facility	495,157	
CA	Commerce, buses	990,315	
CA	Compton, buses and bus-related equipment	247,579	
CA	Culver City, buses	742,736	
CA	Davis, buses	990,315	
CA	El Dorado, buses	495,157	
CA	El Segundo, Douglas Street gap closure and intermodal facility	2,079,661	
CA	Folsom, transit stations	1,485,472	
CA	Foothill Transit, buses and bus facilities	2,475,787	
CA	Fresno, intermodal facilities	495,157	
CA	Humboldt County, buses and bus facilities	495,157	
CA	Los Angeles County Metropolitan Transportation Authority, buses	4,456,416	
CA	Marin County, bus facilities	901,186	
CA	Modesto, bus facility	247,579	
CA	Monrovia, electric shuttles	574,383	
CA	Monterey Salinas Transit Authority, buses and bus facilities	495,157	

FEDERAL TRANSIT ADMINISTRATION

TABLE 9

(Unless noted otherwise, project funding was made available under the 2001 DOT Appropriations Act. Adjustments made for the .22 percent reduction required by the FY 2001 Omnibus Consolidated Appropriations Act.)

FY 2001 SECTION 5309 BUS ALLOCATIONS

STATE	PROJECT	ALLOCATION
CA	Municipal Transit Operators Coalition, buses	1,980,630
CA	Oceanside, intermodal facility	1,980,630
CA	Placer County, buses and bus facilities	495,157
CA	Playa Vista, shuttle buses and bus-related equipment and facilities	2,970,945
CA	Redlands, trolley project	792,252
CA	Rialto, intermodal facility	544,673
CA	Riverside County, buses	495,157
CA	Sacramento, buses and bus facilities	990,315
CA	San Bernardino, intermodal facility	1,584,503
CA	San Bernardino, train station	594,189
CA	San Diego, East Village station improvement plan	990,315
CA	San Francisco, MUNI buses and bus facilities	1,980,630
CA	Santa Barbara County, mini-buses	237,676
CA	Santa Clara Valley Transportation Authority, buses	495,157
CA	Santa Clarita, maintenance facility	1,980,630
CA	Santa Cruz, buses and bus facilities	1,534,988
CA	Sonoma County, buses and bus facilities	990,315
CA	Sunline transit agency, buses	990,315
CA	Temecula, bus shelters	198,063
CA	Vista, bus center	297,094
CO	Statewide bus and bus facilities	9,903,148
CT	Bridgeport, intermodal center	4,951,574
CT	Hartford/New Britain busway	742,736
CT	New Haven, trolley cars and related equipment	990,315
CT	New London, parade project transit improvements	1,980,630
CT	Norwich bus terminal and pedestrian access	990,315
CT	Waterbury, bus garage	990,315
DC	Georgetown University fuel cell bus program	4,803,027
DE	Statewide bus and bus facilities	3,466,102
FL	Statewide bus and bus facilities (including Tallahassee)	15,349,848
GA	Atlanta, buses and bus facilities	1,980,630
GA	Chatham, buses and bus facilities	1,980,630
GA	Cobb County, buses	1,237,894
GA	Georgia Regional Transit Authority, buses and bus facilities	2,970,945
HI	Honolulu bus and bus facility improvements	5,941,889
IA	Ames maintenance facility	1,188,378
IA	Cedar Rapids intermodal facility	1,188,378
IA	Clinton facility expansion	495,157
IA	Des Moines park and ride	693,221
IA	Dubuque, buses and bus facilities	554,576
IA	Iowa City intermodal facility	1,188,378
IA	Mason City, bus facility	896,235
IA	Sioux City multimodal ground transportation center	1,980,630
IA	Sioux City Trolley system	693,221
IA	Statewide, bus and bus facilities	2,475,787
IA	Waterloo, buses and bus facilities	531,799
ID	Statewide, bus and bus facilities	3,466,102
IL	Harvey, intermodal facilities and related equipment	247,579
IL	Statewide, bus and bus facilities	5,941,889
IN	Evansville, buses and bus facilities	1,485,472
IN	Gary - Adam Benjamin intermodal center	792,252
IN	Greater Lafayette Public Corporation -- Wabash Landing buses and bus facilities	1,485,472
IN	Indianapolis, buses and bus-related equipment	2,475,787
IN	South Bend, buses	2,970,945
IN	West Lafayette, buses and bus facilities	2,079,661

FEDERAL TRANSIT ADMINISTRATION

TABLE 9

(Unless noted otherwise, project funding was made available under the 2001 DOT Appropriations Act. Adjustments made for the .22 percent reduction required by the FY 2001 Omnibus Consolidated Appropriations Act.)

FY 2001 SECTION 5309 BUS ALLOCATIONS

STATE	PROJECT	ALLOCATION
KS	Johnson County, buses	247,579
KS	Kansas City, buses	1,980,630
KS	Kansas City, JOBLINKS	247,579
KS	Kansas Department of Transportation, rural transit buses	2,970,945
KS	Lawrence bus and bus facilities	495,157
KS	Topeka, transit facility	594,189
KS	Wichita, buses and ITS related equipment	2,970,945
KS	Wyandotte County, buses	247,579
KY	Audubon Area Community Action	188,160
KY	Bluegrass Community Action, buses and bus-related equipment	158,451
KY	Central Community Action	99,032
KY	Community Action of Southern Kentucky	99,032
KY	Fulton County, vans and buses	138,644
KY	Hardin County, buses	297,094
KY	Kentucky Department of Transportation	243,221
KY	City of Frankfort- minibuses	87,148
KY	Community Action of Fayette/Lexington for cutaways and lifts	63,380
KY	Lexington Red Cross for minibuses	101,408
KY	Kentucky (southern and eastern) transit vehicles	2,970,945
KY	Lexington, LexTran, buses and bus facilities	3,466,102
KY	Louisville, bus and bus facilities	2,970,945
KY	Maysville, bus-related equipment	63,380
KY	Morehead, buses and bus-related equipment	38,622
KY	Murray/Calloway County, buses and bus related equipment	59,419
KY	Northern Kentucky Transit Agency, vans	41,593
KY	Paducah Transit Authority, bus and bus facilities	1,980,630
KY	Pennyrile, vans and related equipment	198,063
KY	Pikeville, transit facility	1,980,630
LA	Lafayette multi-modal facility	1,237,894
LA	Plaquemines Parish ferry	990,315
LA	St. Bernard Parish intermodal facilities	1,237,894
LA	Statewide bus and bus facilities	1,000
LA	Alexandria buses and vans	38,615
LA	Baton Rouge buses and bus equipment	49,516
LA	Jefferson Parish buses and bus related facilities	19,806
LA	Lafayette buses and bus related facilities	297,094
LA	Louisiana Department of Transportation and Development vans	133,692
LA	Monroe buses and bus related facilities	133,692
LA	New Orleans bus lease-maintenance	1,495,375
LA	Shreveport buses	292,143
LA	St. Tammany Parish park and ride	14,854
MA	Attleboro, intermodal facilities	990,315
MA	Berkshire, buses and bus facilities	990,315
MA	Beverly and Salem, intermodal station improvements	594,189
MA	Brockton, intermodal center	990,315
MA	Lowell, transit hub	1,237,894
MA	Merrimack Valley Regional Transit Authority, bus facility	495,157
MA	Montachusett, bus facilities, Leominster	247,579
MA	Montachusett, intermodal facility, Fitchburg	1,361,683
MA	Pioneer Valley, paratransit vehicles and equipment	990,315
MA	Springfield, intermodal facility	495,157
MA	Woburn, buses and bus facilities	247,579
ME	Bangor intermodal transportation center	1,485,472
ME	Statewide, bus, bus facilities and ferries	3,961,259
MD	Statewide bus and bus facilities	7,922,518
MI	Detroit, buses and bus facilities	2,970,945
MI	Flint, buses and bus facilities	495,157

FEDERAL TRANSIT ADMINISTRATION

TABLE 9

(Unless noted otherwise, project funding was made available under the 2001 DOT Appropriations Act. Adjustments made for the .22 percent reduction required by the FY 2001 Omnibus Consolidated Appropriations Act.)

FY 2001 SECTION 5309 BUS ALLOCATIONS

STATE	PROJECT	ALLOCATION
MI	Lapeer, multi-modal transportation facility	49,516
MI	SMART community transit, buses and paratransit vehicles	4,085,048
MI	Statewide, buses and bus facilities	10,893,463
MI	Traverse City, transfer station	990,315
MN	Greater Minnesota buses and bus facilities	1,237,894
MN	Metro Transit, buses and bus facilities	13,369,250
MN	St. Cloud, buses and bus facilities	2,104,419
MO	Bi-State Development Agency, buses	2,970,945
MO	Dunklin, Mississippi, Scott, Ripley, Stoddard and Cape Giradeau counties, buses and bus facilities	990,315
MO	Excelsior Springs bus replacement	198,063
MO	Jefferson City van and equipment purchase	247,579
MO	Kansas City, buses and bus facilities	1,287,409
MO	OATS buses and vans	1,980,630
MO	Southeast Missouri Transportation Service bus and bus facilities	990,315
MO	Southwest Missouri State University, intermodal facility	990,315
MO	St. Joseph bus replacement	990,315
MO	State of Missouri bus and bus facilities	2,970,945
MS	Brookhaven multimodal transportation center	990,315
MS	Coast Transit Authority multimodal facility and shuttle service	2,970,945
MS	Harrison County, multimodal center	1,485,472
MS	Jackson, buses	990,315
MS	Picayune multimodal center	643,705
MS	State of Mississippi rural transit vehicles and regional transit centers	2,970,945
MT	Billings buses and intermodal facility	3,961,259
MT	Blackfoot Indian Reservation bus facility	495,157
MT	Great Falls Transit district buses and bus facilities	990,315
MT	Missoula Ravalli Transportation Management Association buses	742,736
NC	Statewide bus and bus facilities	8,417,675
ND	Statewide bus and bus facilities	2,475,787
NE	Missouri River pedestrian crossing - Omaha	3,961,259
NJ	Elizabeth Ferry Project	495,157
NJ	New Jersey Transit alternative fuel buses	3,961,259
NJ	Newark Arena bus improvements	3,961,259
NJ	Trenton, train/intermodal station	4,951,574
NM	Albuquerque automatic vehicle monitoring system (SOLAR)	1,980,630
NM	Albuquerque bus replacement	1,237,894
NM	Albuquerque, transit facility	4,951,574
NM	Angel Fire bus and bus Facilities	742,736
NM	Carlsbad, intermodal facilities	623,898
NM	Clovis, buses and bus facility	1,609,262
NM	Las Cruces, buses	495,157
NM	Santa Fe buses and bus facilities	1,980,630
NM	Valencia County, transportation station improvements	1,237,894
NV	Clark County bus passenger intermodal facility - Henderson	1,980,630
NV	Clark County, bus rapid transit	3,466,102
NV	Lake Tahoe CNG buses and fleet conversion	1,980,630
NV	Reno and Sparks, buses and bus facilities	990,315
NV	Washoe County buses and bus facilities	2,970,945
NY	Buffalo, buses	1,980,630
NY	Buffalo, intermodal facility	495,157
NY	Eastchester, Metro North facilities	247,579
NY	Greenport and Sag Harbor, ferries and vans	59,419
NY	Highbridge pedestrian walkway	99,032
NY	Jamaica, intermodal facilities	247,579

FEDERAL TRANSIT ADMINISTRATION

TABLE 9

(Unless noted otherwise, project funding was made available under the 2001 DOT Appropriations Act. Adjustments made for the .22 percent reduction required by the FY 2001 Omnibus Consolidated Appropriations Act.)

FY 2001 SECTION 5309 BUS ALLOCATIONS

STATE	PROJECT	ALLOCATION
NY	Larchmont, intermodal facility	990,315
NY	Long Beach, bus maintenance facility	742,736
NY	Midtown West intermodal ferry terminal	6,932,204
NY	Nassau County, bus and bus facilities	1,881,598
NY	Nassau County, Medical Center and its community health centers	396,126
NY	New Rochelle, intermodal transportation center	990,315
NY	Oneida County, buses	990,315
NY	Rensselaer County, intermodal facility	495,157
NY	Rochester, buses and bus facilities	1,980,630
NY	Saratoga County, buses	643,705
NY	Suffolk County, senior and handicapped vans	495,157
NY	Sullivan County, buses, bus facilities, and related equipment	1,237,894
NY	Syracuse, buses	3,144,249
NY	Tompkins County, intermodal facility	618,946
NY	Westchester County, buses	990,315
NY	Westchester and Duchess counties, vans	198,063
OH	Cincinnati - intermodal improvements	990,315
OH	Cincinnati Riverfront Transit Center	2,970,945
OH	Columbus Near East transit center	990,315
OH	Dayton - Second and Main Multimodal Transportation Center	618,946
OH	Statewide bus and bus facilities	13,864,400
OK	Metropolitan Tulsa Transit Authority pedestrian and streetscape improvements	2,475,787
OK	Oklahoma City bus transfer center	2,475,787
OK	Statewide bus and bus facilities	3,961,259
OR	Albany bus purchase - Linn-Benton transit system	198,063
OR	Basin Transit System buses	158,451
OR	Columbia County ADA buses	108,935
OR	Coos County buses	69,322
OR	Corvallis Transit System operations facility	257,482
OR	Hood River County bus and bus facility	237,676
OR	Lakeview buses	49,516
OR	Lane Transit District buses and bus facility	990,315
OR	Philomath buses	39,613
OR	Redmond, buses and vans	49,516
OR	Rogue Valley buses	950,702
OR	Salem Area Transit District buses	1,485,472
OR	Sandy buses	217,870
OR	South Clackamas Transportation District bus	89,128
OR	South Corridor Transit Center and park and ride facilities in Clackamas County	1,485,472
OR	Sunset Empire Transit District improvements to Clatsop County Intermodal Facility	792,252
OR	Tillamook County District transit facilities	158,451
OR	Union County bus	43,574
OR	Wasco County buses	95,070
PA	Allegheny County, buses	247,579
PA	Altoona bus testing facility	2,970,945
PA	Area Transit Authority, ITS related activities	1,782,567
PA	Beaver County, buses	990,315
PA	Berks County, buses and bus facilities	990,315
PA	Bethlehem intermodal facility	1,485,472
PA	Bradford County, buses and bus facilities	990,315
PA	Bucks County, intermodal facility improvements	1,237,894
PA	Cambria County Transit Authority, maintenance facilities	742,736
PA	Centre Area Transportation Authority, buses	1,584,503
PA	Fayette County, maintenance facilities	495,157
PA	Indiana, maintenance facilities	346,610
PA	Lancaster, buses	990,315
PA	Lycoming County, buses and bus facilities	1,980,630
PA	Mid County Transit Authority, buses	133,692
PA	Mid Mon Valley Transit Authority, buses	247,579

FEDERAL TRANSIT ADMINISTRATION

TABLE 9

(Unless noted otherwise, project funding was made available under the 2001 DOT Appropriations Act. Adjustments made for the .22 percent reduction required by the FY 2001 Omnibus Consolidated Appropriations Act.)

FY 2001 SECTION 5309 BUS ALLOCATIONS

STATE	PROJECT	ALLOCATION
PA	Monroe County, buses and bus facilities	990,315
PA	Philadelphia - Frankford Transportation Center	3,466,102
PA	Philadelphia, Callowhill bus garage	247,579
PA	Phoenixville, transit related improvements	1,237,894
PA	Somerset County, ITS related equipment	99,032
PA	Westmoreland County, buses and related equipment	237,676
PA	Wilkes-Barre intermodal transportation center	990,315
RI	Statewide, buses and bus facilities	3,961,259
SC	Statewide, buses and bus facilities	6,610,351
TN	Southern Coalition for Advanced Transportation, buses	1,980,630
TN	Statewide, buses and bus facilities	3,961,259
TX	Austin, buses	495,157
TX	Brazos Transit District, buses	495,157
TX	Corpus Christi, buses and bus facilities	990,315
TX	Dallas, buses	1,980,630
TX	El Paso, buses	990,315
TX	Fort Worth, intermodal transportation center	3,466,102
TX	Forth Worth, buses and bus facilities	2,970,945
TX	Galveston, buses and bus facilities	247,579
TX	Harris County, buses and bus facilities	1,980,630
TX	Houston Metro, Main Street Transit Corridor improvements	990,315
TX	Lubbock, buses and bus facilities	990,315
TX	Texas Rural Transit Vehicle Fleet Replacement Program	3,961,259
TX	Waco, maintenance facility	1,634,019
UT	Statewide Olympic bus and bus facilities	9,903,148
VA	Statewide bus and bus facilities	
VA	Charlottesville bus and bus facilities	978,045
VA	City of Richmond bus and bus facilities	1,956,090
VA	Danville bus replacement	56,727
VA	Fair Lakes League	489,023
VA	Fairfax County Transportation Association of Greater Springfield	489,023
VA	Falls Church Bus Rapid Transit terminus	978,045
VA	Farmville bus and bus facilities	97,804
VA	Hampton Roads bus and bus facilities	2,445,113
VA	Jamestown/Yorktown and Williamsburg CNG bus	1,467,067
VA	Loudoun Transit multi-modal facility	1,467,067
VA	Lynchburg bus and bus facility	1,467,067
VA	Prince William County fleet replacement	2,934,135
VA	Springfield station improvements	489,023
VT	Burlington multimodal transportation center	1,485,472
VT	Bellows Falls Multimodal	1,485,472
VT	Brattleboro multimodal center	2,475,787
VT	Central Vermont Transit Authority buses and bus facilities	1,485,472
VT	Chittenden County transportation authority, buses	990,315
VT	Vermont Statewide paratransit	1,485,472
WA	Clallam County, transportation center	495,157
WA	Clark County, intermodal facilities	990,315
WA	Ephrata, buses	435,738
WA	Everett, buses	1,485,472
WA	King County Metro Eastgate Park and Ride	2,970,945
WA	King County Metro transit bus and bus facilities	1,980,630
WA	Renton/Port Quendall transit project	495,157
WA	Richland, bus maintenance facility	990,315
WA	Snohomish County, buses and bus facilities	990,315
WA	Sound Transit, regional express buses	1,980,630
WA	Statewide combined small transit system request - bus and bus facilities	1,237,894

FEDERAL TRANSIT ADMINISTRATION

TABLE 9

(Unless noted otherwise, project funding was made available under the 2001 DOT Appropriations Act. Adjustments made for the .22 percent reduction required by the FY 2001 Omnibus Consolidated Appropriations Act.)

FY 2001 SECTION 5309 BUS ALLOCATIONS

STATE	PROJECT	ALLOCATION
WA	Thurston County, bus-related equipment	1,237,894
WI	Statewide bus and bus facilities	13,864,407
WV	Statewide buses and bus facilities	1,980,630
WY	Cheyenne transit and operation facility	911,089
	TOTAL ALLOCATION	$574,090,217

a/ Funding for project made available under the FY 2001 Omnibus Consolidated Appropriations Act, Pub. L. 106-554.

FEDERAL TRANSIT ADMINISTRATION

TABLE 9A

PRIOR YEAR UNOBLIGATED SECTION 5309 BUS ALLOCATIONS

STATE	AREA	UNOBLIGATED ALLOCATION
FY 1999 Unobligated Allocations		
AK	Anchorage	$4,267,750
AK	Fairbanks	1,985,000
AK	North Slope Borough	496,250
AK	Whittier	694,750
AL	Birmingham-Jefferson County	899,853
AL	Huntsville	992,500
AL	Pritchard	496,250
AL	Tuscaloosa	1,935,375
CA	Folsom	992,500
CA	Healdsburg	992,500
CA	Humboldt	992,500
CA	Lake Tahoe	496,250
CA	Los Angeles	2,481,250
CA	Morango Basin	645,125
CA	Riverside Transit Agency	992,500
CA	Sacramento	1,240,625
CA	San Diego	992,500
CA	San Fernando Valley	297,750
CA	San Joaquin (Stockton)	992,500
CA	Santa Rosa/Cotati	744,375
CA	Ukiah	496,250
CA	Windsor	744,375
CA	Woodland Hills	322,563
CA	Yolo County	1,191,000
CO	Colorado	100
CO	Denver	1,240,625
CT	Hartford	794,000
CT	Norwich	2,233,125
DC	Washington, D.C.	136,964
DC	Washington, D.C.	2,481,250
FL	Miami Beach	744,375
FL	Miami Beach	992,500
FL	Tampa	1,240,625
GA	Savannah/Chatham Area Transit	3,473,750
IA	Fort Dodge	878,363
IN	Gary	310,157
IN	South Bend	1,240,625
LA	Louisiana Statewide	
LA	Jefferson Parish	347,375
LA	State infrastructure bank, transit account	347,375
LA	St. Tammany Parish	99,250
MA	Essex and Middlesex	208,000
MA	New Bedford/Fall River	248,125
MA	Pittsfield	4,565,500
MD	Maryland statewide	243,590
MN	Duluth Transit Authority	11,406
MN	Twin Cities Area Metro Tranist	3,583,984
MO	St. Louis	1,240,625
MS	Harrison County	1,885,750
MS	High Street, Jackson	1,003,904

FEDERAL TRANSIT ADMINISTRATION

TABLE 9A

PRIOR YEAR UNOBLIGATED SECTION 5309 BUS ALLOCATIONS

STATE	AREA	UNOBLIGATED ALLOCATION
MS	Jackson	660,550
MT	Butte	560,150
NC	Statewide	4,400,500
ND	Statewide	339,158
NH	Statewide	632,177
NM	Albuquerque	3,721,875
NM	Northern New Mexico	1,985,000
NV	Washoe County	25,661
NY	Buffalo	2,977,500
NY	Buffalo	1,488,750
NY	Ithaca	1,240,625
NY	Mineola/Hicksville	1,240,625
NY	New York City	1,488,750
NY	Niagara Frontier Transportation Authority	496,250
NY	Rome	397,000
NY	Ulster County	992,500
NY	Utica	2,084,250
OR	Lane County	4,367,000
OR	Rogue Valley Transit District	992,500
OR	Salem Area Mass Transit System	992,500
OR	Wilsonville	397,000
PA	Chambersburg Transit Authority	297,750
PA	Chambersburg Transit Authority	992,500
PA	Fayette County	225,475
PA	Monroe County Transportation Authority	992,500
PA	Philadelphia	1,240,625
PA	Philadelphia	744,375
PA	Red Rose	992,500
PA	Robinson Towne Center	1,488,750
PA	Somerset County	173,688
PA	Towamencin Township	1,488,750
PA	Washington County	625,275
PA	Westmoreland County	198,500
PA	Wilkes-Barre	1,240,625
SC	Pee Dee	901,801
SD	South Dakota	794,000
SD	South Dakota	2,606,842
TX	Brazos Transit Authority	1,166,350
TX	Galveston	215,846
VA	Alexandria	992,500
VA	Alexandria	1,091,750
VA	Lynchburg	128,802
VA	Richmond	1,240,625
VA	Statewide	1,515,200
VA	Stringfellow Road/Interstate 66	992,500
VT	Brattleboro	2,481,250
VT	Burlington	992,500
WA	Anacortes	496,250
WA	Bremerton	992,500
WA	Mount Vernon	1,736,875
WA	Port Angeles center	992,500
WA	Seattle	1,240,625
WA	Vancouver Clark County (C-Tran)	992,500

FEDERAL TRANSIT ADMINISTRATION

TABLE 9A

PRIOR YEAR UNOBLIGATED SECTION 5309 BUS ALLOCATIONS

STATE	AREA	UNOBLIGATED ALLOCATION
WI	Wisconsin statewide	1,987,082
WI	Appleton, Green Bay, Shawano, Menominee Tribe and Oneida Tribe	2,059,438
WI	LaCrosse, Onalaska, Prairie Du Chien, Rice Lake, Viroqua and Ho Chuck Nation	992,500
WI	Ashland, Chippewa Falls, Eau Claire, Ladysmith, Marshfield, Rhinelander, Rusk County	297,750
	Subtotal FY 1999 Unobligated Allocations	*$125,023,252*
FY 2000 Unobligated Allocations		
AK	Anchorage	$2,471,750
AK	Anchorage	4,414,928
AK	Fairbanks	1,962,190
AK	Juneau	1,471,643
AK	North Star Borough-Fairbanks	2,943,286
AK	Wasilla	981,096
AK	Whittier	1,133,165
AL	Birmingham-Jefferson County	1,226,369
AL	Dothan Wiregrass	484,926
AL	Wilcox County	98,110
AL	Huntsville	1,226,369
AL	Huntsville	3,433,833
AL	Jefferson	196,219
AL	Mobile	4,905,476
AL	Montgomery	3,433,833
AR	Arkansas Highway and Transit Department	1,962,190
AR	Arkansas State	452,876
AR	Fayetteville	490,547
AR	Hot Springs	981,096
AR	Hot Springs	549,413
AR	Little Rock	294,329
CA	Bell	196,219
CA	California Mountain Area Regional Transit Authority	78,487
CA	Commerce	353,194
CA	Contra Costa County Connection	245,274
CA	Cudahy	117,731
CA	Healdsburg	981,096
CA	I-5 Corridor	1,226,369
CA	Lodi	833,931
CA	Los Angeles County	92,736
CA	Los Angeles	2,207,464
CA	Maywood	117,731
CA	Monterey, Monterey-Salinas	613,185
CA	Redlands	784,876
CA	Sacramento	1,226,369
CA	San Bernardino Valley	981,096
CA	San Bernardino	2,943,286
CA	Santa Barbara	1,716,916
CA	Santa Clarita	1,967,894
CA	Santa Cruz	1,721,822
CA	Santa Maria Valley/Santa Barbara County	235,463

FEDERAL TRANSIT ADMINISTRATION

TABLE 9A

PRIOR YEAR UNOBLIGATED SECTION 5309 BUS ALLOCATIONS

STATE	AREA	UNOBLIGATED ALLOCATION
CA	Westminster	147,164
CA	Windsor	735,821
CA	Woodland Hills	613,185
CO	Colorado State	2,662,629
CO	Denver	1,226,369
CT	Norwich	2,207,464
DC	Washington, D.C.	123,716
DC	Washington, D.C.	2,452,738
FL	Jacksonville	981,096
FL	Miami Beach	735,821
FL	Tampa	490,547
GA	Chatham	3,433,833
GA	Georgia Regional Transportation Authority	1,962,190
GA	Georgia Statewide	2,698,012
HI	Hawaii	2,207,464
IA	Cedar	3,276,857
IA	Clinton	490,547
IA	Fort Dodge	868,269
IA	Iowa City	1,471,643
IA	Iowa Statewide	526,308
IA	Mason City	156,976
IL	East Moline	637,712
IL	Illinois Statewide	866,492
IN	Gary	306,593
IN	Indianapolis	4,905,476
IN	South Bend	1,226,369
KS	Girard	686,767
KS	Girard	470,926
KS	Kansas	1,471,643
KS	Topeka	588,657
KS	Wichita	2,452,738
KY	Lexington	981,096
LA	Baton Rouge	294,329
LA	Jefferson Parish	44,149
LA	Lafayette	147,164
LA	Monroe	284,518
LA	New Orleans	3,237,614
LA	St Tammany Parish	58,866
MA	Attleboro	490,547
MA	Greenfield Montague	490,547
MA	Merrimack Valley	458,662
MA	Montachusett	1,226,369
MA	Pittsfield	3,531,943
MA	Springfield	1,226,369
MA	Swampscott	63,772
MA	Westfield	490,547
MD	Maryland Statewide	11,282,593
MI	Detroit	3,888,080
MI	Michigan Statewide	22,074,625
MN	Duluth	981,096
MN	Duluth	490,547
MN	Duluth	490,547
MN	Greater Minnesota transit authorities	426,547

FEDERAL TRANSIT ADMINISTRATION

TABLE 9A

PRIOR YEAR UNOBLIGATED SECTION 5309 BUS ALLOCATIONS

STATE	AREA	UNOBLIGATED ALLOCATION
MN	Northstar Corridor	9,810,950
MN	Twin Cities	11,541,175
MO	Franklin County	96,219
MO	Jackson County	291,347
MO	Missouri Statewide	20,000
MO	OATS Transit	1,013,693
MO	Southeast Missouri	1,074,369
MO	Southwest Missouri	981,096
MO	St. Louis	1,226,369
MS	Harrison County	2,943,286
MS	Jackson	981,096
MS	North Delta planning and development district	1,177,314
NC	Greensboro	3,275,877
NC	Greensboro	1,471,643
NC	North Carolina Statewide	2,444,889
ND	North Dakota Statewide	404,899
NH	New Hampshire Statewide	2,943,286
NJ	New Jersey Transit	4,905,476
NJ	New Jersey Transit	1,716,916
NJ	Newark	1,618,807
NJ	Newark	1,226,369
NJ	South Amboy	1,226,369
NM	Las Cruces	735,821
NM	Northern New Mexico	2,698,012
NV	Lake Tahoe	686,767
NV	Washoe County	2,207,464
NY	Buffalo	1,962,190
NY	Dutchess County	150
NY	Ithaca	1,103,732
NY	Ithaca	1,226,369
NY	Long Island	1,226,369
NY	New York	981,096
NY	Putnam County	461,115
NY	Rensselaer	1,199,753
NY	Rochester	981,096
NY	Syracuse	2,943,286
NY	Utica	2,060,300
OH	Cleveland	613,185
OK	Oklahoma Statewide	636,726
OR	Lane County	4,316,819
OR	Lincoln County	245,274
OR	Portland	637,712
OR	Salem	490,547
OR	Sandy	98,110
OR	South Metro Area Rapid Transit (SMART)	196,219
OR	Sunset Empire Transit District	294,329
PA	Altoona	2,943,286
PA	Altoona	826,082
PA	Bethlehem	981,096
PA	Chester County	981,096
PA	Fayette County	1,245,991
PA	Lackawanna County	588,657
PA	Philadelphia	1,226,369

FEDERAL TRANSIT ADMINISTRATION

TABLE 9A

PRIOR YEAR UNOBLIGATED SECTION 5309 BUS ALLOCATIONS

STATE	AREA	UNOBLIGATED ALLOCATION
PA	Robinson	1,471,643
PA	Somerset County	171,691
PA	Towamencin Township	1,471,643
PA	Washington County	618,089
PA	Westmoreland County	196,219
PA	Wilkes-Barre	1,226,369
SC	Central Midlands COG	769,210
SC	Charleston	1,864,081
SC	Clemson	539,602
SC	Greenville	490,547
SC	Pee Dee	882,986
SC	Santee-Wateree	392,438
SC	South Carolina Statewide Virtual Transit Enterprise	1,196,936
SC	Spartanburg	588,657
SD	South Dakota Statewide	1,471,643
TN	Southern Coalition for Advanced Transportation (SCAT)	2,943,294
TX	Beaumont	981,096
TX	El Paso	981,096
TX	Galveston	981,096
TX	Texas Statewide	4,905,476
UT	Salt Lake City Olympics	2,035,818
UT	Salt Lake City Olympics	2,452,738
UT	Salt Lake City Olympics	490,547
VA	Alexandria	981,096
VA	Alexandria	981,096
VA	Dulles	1,962,190
VA	Fair Lakes League	196,219
VA	Richmond	1,226,369
VT	Burlington	2,648,957
VT	Essex Junction	490,547
VT	Killington-Sherburne	245,274
WA	Bremerton	735,821
WA	Grant County	490,547
WA	Grays Harbor County	1,226,369
WA	King Country	1,962,190
WA	King County	1,471,643
WA	King County	1,324,478
WA	Mount Vernon	1,316,916
WA	Pierce County	490,547
WA	Seattle	1,226,369
WA	Sequim	981,096
WA	Spokane	1,471,643
WA	Tacoma	245,274
WA	Vancouver Clark County	981,096
WA	Washington State DOT	1,962,190
WI	Wisconsin Statewide	13,980,605
WV	Parkersburg	4,414,928
WV	West Virginia Statewide	573,038
	Subtotal FY 2000 Unobligated Allocations	*$311,393,208*
	TOTAL UNOBLIGATED ALLOCATION	$436,416,460

FEDERAL TRANSIT ADMINISTRATION

TABLE 9A

PRIOR YEAR UNOBLIGATED SECTION 5309 BUS ALLOCATIONS

STATE	AREA	UNOBLIGATED ALLOCATION
Fiscal Years 1997 and 1998 Allocations Extended in Conference Report 106-490		
CA	*Lake Tahoe, intermodal transit center*	*$977,196*
CA	*Rialto, Metro Link depot*	*1,074,916*
CA	*San Joaquin, buses and bus facilities*	*1,954,393*
PA	*Wilkes Barre, mobility project*	*1,465,794*
VT	*Burlington, multimodal center*	*1,465,794*
	Total Extended Allocations	*$6,938,093* a/

a/ Period of availability for remaining unobligated funds extended one additional year and will lapse September 30, 2001. Projects extended in Conference Report 106-490 whose funds were obligated as of September 30, 2000 are not listed.

FEDERAL TRANSIT ADMINISTRATION

TABLE 10 (REVISED)

(Revised to reflect .22 percent reduction required by the FY 2001 Omnibus Consolidated Appropriations Act, Pub. L. 106-554)

REVISED FY 2001 JOB ACCESS AND REVERSE COMMUTE PROGRAM ALLOCATIONS

STATE	PROJECT AND DESCRIPTION	REVISED ALLOCATION
AK	Central Kenai Peninsula public transportation	$498,900
AK	Mantanuska-Susitna borough, M.A.S.C.O.T, Alaska	59,868
AK	Sitka, Alaska transit expansion program	399,120
AL	Easter Seals West Alabama work transition programs	848,130
AL	Mobile, Alabama	249,450
AL	State of Alabama	1,496,700
AL	Troy State University, Alabama -- Rosa Parks Center	1,995,600
AR	State of Arkansas	3,991,200
AZ	Tucson, Arizona	997,800
CA	Alameda and Contra-Costa counties, California	$498,900
CA	Fresno, Tulare, Kings and Kern Counties, California	2,993,400
CA	Los Angeles, California	3,492,300
CA	Monterey, California	149,670
CA	Sacramento, California	997,800
CA	San Francisco, California	274,395
CA	Santa Clara County, California	498,900
CO	Archuleta County, Colorado	74,835
DC	District of Columbia	997,800
FL	Broward County, Florida	1,995,600
FL	Hillsborough County, Florida	598,680
GA	Chatham, Georgia	498,900
IA	Des Moines, Dubuque, Sioux City, Delaware and Jackson Counties, Iowa	1,596,480
IL	Chicago, Illinois	997,800
IL	DuPage County, Illinois	498,900
IL	Southern Illinois RIDES	149,670
IL	State of Illinois	997,800
IN	Indianapolis, Indiana	997,800
KS	Kansas City, Kansas	997,800
MA	Athol / Orange community transportation, Massachusetts	399,120
MA	Western Massachusetts	349,230
MD	State of Maryland	2,394,720
ME	State of Maine	498,900
ME	York County, Maine	898,020
MI	North Oakland County, Michigan	249,450
MO	Meramec Community Transit programs, Missouri	149,670
MO	OATS job access programs, Missouri	748,350
NH	State of New Hampshire	339,252
NM	Dona Ana County, New Mexico	249,450
NM	Las Cruces, New Mexico	259,428
NM	State of New Mexico	1,995,600
NV	Washoe County, Nevada	997,800
NY	Broome County Transit, New York	249,450
NY	Buffalo, New York	498,900
NY	Capital District Authority, New York	249,450
NY	Nassau County, New York	498,900
NY	Rochester, New York	299,340
NY	Suffolk County, New York	444,021

FEDERAL TRANSIT ADMINISTRATION

TABLE 10 (REVISED)

(Revised to reflect .22 percent reduction required by the FY 2001 Omnibus Consolidated Appropriations Act, Pub. L. 106-554)

REVISED FY 2001 JOB ACCESS AND REVERSE COMMUTE PROGRAM ALLOCATIONS

STATE	PROJECT AND DESCRIPTION	REVISED ALLOCATION
NY	Sullivan County, New York	199,560
NY	Tompkins County, New York	299,340
NY	Ulster County, New York	199,560
OH	Central Ohio	748,350
OK	State of Oklahoma	4,490,100
OR	Portland, Oregon	1,835,952
PA	Greater Erie Community Action Committee, Pennsylvania	399,120
PA	Pittsburgh Port Authority of Allegheny County, Pennsylvania	1,995,600
PA	SEPTA, Philadelphia, Pennsylvania	2,993,400
RI	Rhode Island community food bank transportation	99,780
RI	Rhode Island Public Transit Authority	997,800
TN	State of Tennessee	1,995,600
TX	Corpus Christi RTA, Texas	548,790
VA	Commonwealth of Virginia	4,490,100
VA	Tysons Corner/Dulles Corridor, Virginia	498,900
VT	State of Vermont	1,496,700
WA	State of Washington	1,995,600
WI	State of Wisconsin	4,689,660
WV	State of West Virginia	1,496,700
----	Ways to Work family loan program, Southeastern U.S.	1,995,600
	TOTAL ALLOCATION	$75,079,461

FEDERAL TRANSIT ADMINISTRATION

TABLE 11

TEA-21 AUTHORIZATION LEVELS (GUARANTEED FUNDING ONLY)

APPROPRIATION / PROGRAM	FY 1998	FY 1999	FY 2000	FY 2001	FY 2002	FY 2003	TOTAL
Urbanized Area Formula (Section 5307)	$2,298,852,727	$2,548,190,791	$2,772,890,281	$2,997,316,081	$3,220,601,506	$3,445,939,606	$17,283,790,992
Nonurbanized Area Formula (Section 5311)	134,077,934	177,923,658	193,612,968	209,283,168	224,873,743	240,607,643	1,180,379,114
Elderly and Persons with Disabilities (Section 5310)	62,219,389	67,035,601	72,946,801	78,850,801	84,724,801	90,652,801	456,430,194
Clean Fuels Formula Program (Section 5308)	0	50,000,000	50,000,000	50,000,000	50,000,000	50,000,000	250,000,000
Over the Road Bus Accessibility Program	0	2,000,000	3,700,000	4,700,000	6,950,000	6,950,000	24,300,000
Alaska Railroad (Section 5307)	4,849,950	4,849,950	4,849,950	4,849,950	4,849,950	4,849,950	29,099,700
Bus and Bus Related (Section 5309)	400,000,000	451,400,000	490,200,000	529,200,000	568,200,000	607,200,000	3,046,200,000
Fixed Guideway Modernization (Section 5309)	800,000,000	902,800,000	980,400,000	1,058,400,000	1,136,400,000	1,214,400,000	6,092,400,000
New Starts (Section 5309)	800,000,000	902,800,000	980,400,000	1,058,400,000	1,136,400,000	1,214,400,000	6,092,400,000
Job Access and Reverse Commute Program	0	50,000,000	75,000,000	100,000,000	125,000,000	150,000,000	500,000,000
Metropolitan Planning (Section 5303)	39,500,000	43,841,600	49,632,000	52,113,600	55,422,400	60,385,600	300,895,200
State Planning & Research (Section 5313(b))	8,250,000	9,158,400	10,368,000	10,886,400	11,577,600	12,614,400	62,854,800
National Planning & Research (Section 5314)	32,750,000	27,500,000	29,500,000	29,500,000	31,500,000	31,500,000	182,250,000
Rural Transit Assistance (Section 5311(b)(2))	4,500,000	5,250,000	5,250,000	5,250,000	5,250,000	5,250,000	30,750,000
Transit Cooperative Research (Section 5313(a))	4,000,000	8,250,000	8,250,000	8,250,000	8,250,000	8,250,000	45,250,000
National Transit Institute (Section 5315)	3,000,000	4,000,000	4,000,000	4,000,000	4,000,000	4,000,000	23,000,000
University Transportation Centers (Section 5317(b))	6,000,000	6,000,000	6,000,000	6,000,000	6,000,000	6,000,000	36,000,000
Administrative Expenses	45,738,000	54,000,000	60,000,000	64,000,000	67,000,000	73,000,000	363,738,000
FEDERAL TRANSIT ADMINISTRATION TOTAL:	$4,643,738,000	$5,315,000,000	$5,797,000,000	$6,271,000,000	$6,747,000,000	$7,226,000,000	$35,999,738,000

-- Fiscal Years 1999-2003 funding for the Clean Fuels Program established under TEA-21 equals $100,000,000. $50,000,000 is shown under the Cleans Fuels Program (Section 5308) and $50,000,000 is included under the Bus and Bus Related (Section 5309).

FEDERAL TRANSIT ADMINISTRATION

TABLE 11A

TEA-21 AUTHORIZATION LEVELS (GUARANTEED AND NONGUARANTEED FUNDING)

APPROPRIATION / PROGRAM	FY 1998	FY 1999	FY 2000	FY 2001	FY 2002	FY 2003	TOTAL
Urbanized Area Formula (Section 5307)	$2,298,852,727	$2,698,190,791	$2,922,890,281	$3,147,316,081	$3,370,601,506	$3,595,939,606	$18,033,790,992
Nonurbanized Area Formula (Section 5311)	134,077,934	177,923,658	193,612,968	209,283,168	224,873,743	240,607,643	1,180,379,114
Elderly and Persons with Disabilities (Section 5310)	62,219,389	67,035,601	72,946,801	78,850,801	84,724,801	90,652,801	456,430,194
Clean Fuels Formula Program (Section 5308)	0	150,000,000	150,000,000	150,000,000	150,000,000	150,000,000	750,000,000
Over the Road Bus Accessibility Program	0	2,000,000	3,700,000	4,700,000	6,950,000	6,950,000	24,300,000
Alaska Railroad (Section 5307)	4,849,950	4,849,950	4,849,950	4,849,950	4,849,950	4,849,950	29,099,700
Bus and Bus Related (Section 5309)	400,000,000	551,400,000	590,200,000	629,200,000	668,200,000	707,200,000	3,546,200,000
Fixed Guideway Modernization (Section 5309)	800,000,000	1,002,800,000	1,080,400,000	1,158,400,000	1,236,400,000	1,314,400,000	6,592,400,000
New Starts (Section 5309)	800,000,000	1,302,800,000	1,390,400,000	1,478,400,000	1,566,400,000	1,644,400,000	8,182,400,000
Job Access and Reverse Commute Program	0	150,000,000	150,000,000	150,000,000	150,000,000	150,000,000	750,000,000
Metropolitan Planning (Section 5303)	39,500,000	70,312,000	76,929,600	80,238,400	84,374,400	90,164,800	441,519,200
State Planning & Research (Section 5313(b))	8,250,000	14,688,000	16,070,400	16,761,600	17,625,600	18,835,200	92,230,800
National Planning & Research (Section 5314)	32,750,000	58,500,000	60,500,000	62,500,000	64,500,000	65,500,000	344,250,000
Rural Transit Assistance (Section 5311(b)(2))	4,500,000	5,250,000	5,250,000	5,250,000	5,250,000	5,250,000	30,750,000
Transit Cooperative Research (Section 5313(a))	4,000,000	8,250,000	8,250,000	8,250,000	8,250,000	8,250,000	45,250,000
National Transit Institute (Section 5315)	3,000,000	4,000,000	4,000,000	4,000,000	4,000,000	4,000,000	23,000,000
University Transportation Centers (Section 5317(b))	6,000,000	6,000,000	6,000,000	6,000,000	6,000,000	6,000,000	36,000,000
Administrative Expenses	45,738,000	67,000,000	74,000,000	80,000,000	84,000,000	91,000,000	441,738,000
TOTAL FUNDING ALL PROGRAMS:	$4,643,738,000	$6,341,000,000	$6,810,000,000	$7,274,000,000	$7,737,000,000	$8,194,000,000	$40,999,738,000

FEDERAL TRANSIT ADMINISTRATION

TABLE 12

FY 2001 APPORTIONMENT FORMULA FOR FORMULA PROGRAM

Percent of Formula Funds Available

Section 5310:	2.4%	States - allocated to states based on state's population of elderly and persons with disabilities
Section 5311:	6.37%	Nonurbanized Areas - allocated to states based on state's nonurbanized area population
Section 5307:	91.23%	Urbanized Areas (UZA)

UZA Population and Weighting Factors

50,000-199,000 in population :
(Apportioned to Governors)

9.32% of available Section 5307 funds
50% apportioned based on population
50% apportioned based on population x population density

200,000 and greater in population:
(Apportioned to UZAs)

90.68% of available Section 5307 funds
33.29% (Fixed Guideway Tier*)
95.61% (Non-incentive Portion of Tier)
--- at least 0.75% to each UZA with commuter rail and pop. 750,000 or greater
60% - fixed guideway revenue vehicle miles
40% - fixed guideway route miles

4.39% ("Incentive" Portion of Tier)
-- at least 0.75% to each UZA with commuter rail and pop. 750,000 or greater
-- fixed guideway passenger miles x fixed guideway passenger miles/operating cost

66.71% ("Bus" Tier)
90.8% (Non-incentive Portion of Tier)
73.39% for UZAs with population 1,000,000 or greater
50% - bus revenue vehicle miles
25% - population
25% - population x population density
26.61% for UZAs pop. < 1,000,000
50% - bus revenue vehicle miles
25% - population
25% - population x density
9.2% ("Incentive" Portion of Tier)
-- bus passenger miles x bus passenger miles/operating cost

*Includes all fixed guideway modes, such as heavy rail, commuter rail, light rail, trolleybus, aerial tramway, inclined plane, cable car, automated guideway transit, ferryboats, exclusive busways, and HOV lanes.

FEDERAL TRANSIT ADMINISTRATION

TABLE 13

FY 1998 - 2003 SECTION 5309 FIXED GUIDEWAY MODERNIZATION PROGRAM APPORTIONMENT FORMULA

Tier 1 First $497,700,000 to the following areas:

Baltimore	$	8,372,000
Boston	$	38,948,000
Chicago/N.W. Indiana	$	78,169,000
Cleveland	$	9,509,500
New Orleans	$	1,730,588
New York	$	176,034,461
N. E. New Jersey	$	50,604,653
Philadelphia/So. New Jersey	$	58,924,764
Pittsburgh	$	13,662,463
San Francisco	$	33,989,571
SW Connecticut	$	27,755,000

Tier 2 Next $70,000,000 as follows: Tier 2(A): 50 percent is allocated to areas identified in Tier 1; Tier 2(B): 50 percent is allocated to other urbanized areas with fixed guideway tiers in operation at least seven years. Funds are allocated by the Urbanized Area Formula Program fixed guideway tier formula factors that were used to apportion funds for the fixed guideway modernization program in FY 1997.

Tier 3 Next $5,700,000 as follows: Pittsburgh 61.76%; Cleveland 10.73%; New Orleans 5.79%; and 21.72% is allocated to all other areas in Tier 2(B) by the same fixed guideway tier formula factors used in fiscal year 1997.

Tier 4 Next $186,600,000 as follows: All eligible areas using the same year fixed guideway tier formula factors used in fiscal year 1997.

Tier 5 Next $70,000,000 as follows: 65% to the 11 areas identified in Tier 1, and 35% to all other areas using the most current Urbanized Area Formula Program fixed guideway tier formula factors. Any segment that is less than 7 years old in the year of the apportionment will be deleted from the database.

Tier 6 Next $50,000,000 as follows: 60% to the 11 areas identified in Tier 1, and 40% to all other areas using the most current Urbanized Area Formula Program fixed guideway tier formula factors. Any segment less than 7 years old in the year of the apportionment will be deleted from the database.

Tier 7 Remaining amounts as follows: 50% to the 11 areas identified in Tier 1, and 50% to all other areas using the most current Urbanized Area Formula Program fixed guideway formula factors. Any segment that is less than 7 years old in the year of the apportionment will be deleted from the database.

FEDERAL TRANSIT ADMINISTRATION

TABLE 14 (REVISED)

(Revised to reflect .22 percent reduction required by the FY 2001 Omnibus Consolidated Appropriations Act, Pub. L. 106-554)

REVISED FISCAL YEAR 2001 FORMULA GRANT APPORTIONMENTS - UNIT VALUES OF DATA

		REVISED APPORTIONMENT UNIT VALUE
Section 5307 Urbanized Area Formula Program - Bus Tier		
Urbanized Areas Over 1,000,000:		
Population		$3.09784333
Population x Density		$0.00079454
Bus Revenue Vehicle Mile		$0.39009438
Urbanized Areas Under 1,000,000:		
Population		$2.79959269
Population x Density		$0.00123293
Bus Revenue Vehicle Mile		$0.47665619
Bus Incentive (PM denotes Passenger Mile):		
Bus PM x Bus PM = Operating Cost		$0.00490633
Section 5307 Urbanized Area Formula Program - Fixed Guideway Tier		
Fixed Guideway Revenue Vehicle Mile		$0.54394821
Fixed Guideway Route Mile		$30,241
Commuter Rail Floor	$6,334,144	
Fixed Guideway Incentive:		
Fixed Guideway PM x Fixed Guideway PM = Operating Cost		$0.00046770
Commuter Rail Incentive Floor	$290,837	
Section 5307 Urbanized Area Formula Program - Areas Under 200,000		
Population		$5.05223507
Population x Density		$0.00252459
Section 5311 Nonurbanized Area Formula Program		
Areas Under 50,000		
Population		$2.23046341

Section 5309 Capital Program - Fixed Guideway Modernization

	Tier 2	Tier 3	Tier 4	Tier 5	Tier 6	Tier 7
Legislatively Specified Areas:			*All Areas*			
Revenue Vehicle Mile	$0.03043443	-------	$1.13683131	$0.03818107	$0.02517433	$0.07067452
Route Mile	$2,122.43	-------	$7,832.52	$2,808.12	$1,851.51	$5,197.93
Other Urbanized Areas:						
Revenue Vehicle Mile	$0.16377360	$0.00579309		$0.12041122	$0.09829487	$0.41391295
Route Mile	$4,772.78	$168.83		$3,444.88	$2,812.15	$11,841.76

[FR Doc. 01–1082 Filed 1–17–01; 8:45 am]
BILLING CODE 4910–57–C

Federal Register

Thursday,
January 18, 2001

Part III

Department of Transportation

Federal Transit Administration

Assurances for Federal Transit Administration Grants and Cooperative Agreements; Notice

DEPARTMENT OF TRANSPORTATION

Federal Transit Administration

Fiscal Year 2001 Annual List of Certifications and Assurances for Federal Transit Administration Grants and Cooperative Agreements

AGENCY: Federal Transit Administration, DOT.

ACTION: Notice.

SUMMARY: This Notice contains FTA's comprehensive compilation of the Federal Fiscal Year 2001 certifications and assurances to be used in connection with all Federal assistance programs FTA administers during Federal Fiscal Year 2001, as required by 49 U.S.C. 5323(n).

EFFECTIVE DATE: January 9, 2001.

FOR FURTHER INFORMATION CONTACT: FTA staff in the appropriate Regional Office listed below. For copies of other related documents, see the FTA Web Site at *http://www.fta.dot.gov* or contact the Office of Public Affairs, Federal Transit Administration (202) 366–4019.

Region 1: Boston

States served: Maine, New Hampshire, Vermont, Connecticut, Rhode Island, and Massachusetts, Telephone # 617–494–2055

Region 2: New York

States served: New York, New Jersey, and Virgin Islands, Telephone # 212–668–2170

Region 3: Philadelphia

States served: Pennsylvania, Delaware, Maryland, Virginia, West Virginia, and District of Columbia, Telephone # 215–656–7100

Region 4: Atlanta

States served: Kentucky, North Carolina, South Carolina, Georgia, Florida, Alabama, Mississippi, Tennessee, and Puerto Rico, Telephone # 404–562–3500

Region 5: Chicago

States served: Minnesota, Wisconsin, Michigan, Illinois, Indiana, and Ohio, Telephone # 312–353–2789

Region 6: Dallas/Ft. Worth

States served: Arkansas, Louisiana, Oklahoma, Texas, and New Mexico, Telephone # 817–978–0550

Region 7: Kansas City

States served: Missouri, Iowa, Kansas, and Nebraska, Telephone # 816–523–0204

Region 8: Denver

States served: Colorado, Utah, Wyoming, Montana, North Dakota, South Dakota, Telephone # 303–844–3242

Region 9: San Francisco

States served: California, Hawaii, Guam, Arizona, Nevada, American Samoa, and the Northern Mariana Islands, Telephone # 415–744–3133

Region 10: Seattle

States served: Idaho, Oregon, Washington, and Alaska, Telephone # 206–220–7954

SUPPLEMENTARY INFORMATION: Before FTA may award a Federal grant or cooperative agreement, the Applicant must provide to FTA all certifications and assurances pertaining to itself or its project as required by Federal laws and regulations. The requisite certifications and assurances must be submitted to FTA irrespective of whether the project is financed under the authority of 49 U.S.C. chapter 53, or title 23, United States Code, or another Federal statute.

The Applicant's Annual Certifications and Assurances for Federal Fiscal Year 2001 covers all projects for which the Applicant seeks funding during that fiscal year. An Applicant's Annual Certifications and Assurances applicable to a specific grant or cooperative agreement generally remain in effect for the life of the grant or cooperative agreement to closeout, or the life of the project or project property when a useful life or standard industry life is in effect. If in a later year, however, the Applicant provides certifications and assurances that differ from the certifications and assurances previously made, the later certifications and assurances will apply to the grant, cooperative agreement, project, or project property, except as FTA otherwise permits.

Background

Since Federal Fiscal Year 1995, FTA has been consolidating the various certifications and assurances that may be required into one document. FTA intends to continue publishing this document annually in conjunction with its publication of the FTA annual apportionment Notice, which allocates funds made available by the latest U.S. Department of Transportation (U.S. DOT) annual appropriations act.

Federal Fiscal Year 2001 Changes: The following changes have been made:

(1) To accommodate FTA's Transportation Electronic Award and Management (TEAM) system numbering and alphabetical programming, Arabic numbers replace Roman numerals for designating categories.

(2) A reference to DOT regulations, ''Protection of Human Subjects,'' 49 CFR part 11, is added to Certification 1. J(16) in connection with participation of individuals in research and development projects.

(3) In Certification 1.J(18), a reference to the latest OMB A–133 Compliance Supplement provisions for the Department of Transportation, dated March 2000 has been substituted for the previous compliance supplement.

(4) Subsection B of Certification 3 has been amended to emphasize that the ''maximum extent feasible'' requirement for private operator participation would be interpreted in accordance with FTA requirements and policies.

(5) A Clean Fuels Formula Program Certification has been added to Certification 12 in the event that funds are appropriated for that program.

(6) The Certifications and Assurances for the Elderly and Persons with disabilities program (Certification 13), the Nonurbanized Area Program (Certification 14), and the State Infrastructure Bank Program (Certification 15) have been streamlined to emphasize the state's responsibility to monitor its subrecipients' compliance with FTA requirements while providing the state more flexibility to extend those requirements in a manner other than requiring the submission of certifications in cases where certifications are not expressly required by Federal law or regulation.

(7) The Attorney is no longer responsible for notifying the Recipient of pending legislation or litigation that might affect the project after signing the Attorney's affirmation. Nevertheless, the Recipient continues to be responsible to FTA to provide that information as set forth in subsection 2.g of the Master Agreement.

Text of Federal Fiscal Year 2001 Certifications and Assurances

A detailed compilation of the provisions of the Certifications and Assurances and the Signature Page as set forth in Appendix A of this Notice, also appears in the Cert's & Assurances Tab Page of FTA's TEAM system. It is important that each Applicant be familiar with all fifteen (15) certification and assurance categories contained in this Notice as they may be a prerequisite for receiving FTA financial assistance. Provisions of this Notice supersede conflicting statements in any circular containing a previous version of the Annual Certifications and Assurances. The certifications and assurances contained in those circulars are merely

examples, and are not acceptable or valid for Federal Fiscal Year 2001; do not rely on the statements within certifications and assurances appearing in circulars.

Significance of Certifications and Assurances

Selecting and submitting certifications and assurances to FTA, either through the TEAM system or submission of the Signature Page of Appendix A, signifies the Applicant's intent to comply with the requirements of those certifications and assurances to the extent they apply to a program for which the Applicant submits an application for assistance in Federal Fiscal Year 2001.

Requirement for Attorney's Signature

FTA requires a current (Federal Fiscal Year 2001) attorney's affirmation of the Applicant's legal authority to certify compliance with the funding obligations in this document. Irrespective of whether the Applicant chooses to make a single selection for all 15 categories or select individual options from the 15 categories, the attorney's signature from a previous year is not acceptable.

Deadline for Submission

All Applicants for FTA capital investment program or formula program assistance, and current grantees with an active project financed with FTA capital investment program or formula program assistance, are expected to provide Federal Fiscal Year 2001 Certifications and Assurances within 90 days from the date of this publication or with its first grant application in Fiscal Year 2001, whichever is first. Other Applicants are encouraged to submit their certifications and assurances as soon as possible.

Preference for Electronic Submission

FTA has expanded the use of the electronic programs for Applicants, first introduced in 1995. FTA expects Applicants registered in the TEAM system to submit their applications as well as certifications and assurances electronically through FTA's TEAM system. Only if an Applicant is unable to submit its certifications and assurances through the TEAM system should the Applicant use the Signature Page form in Appendix A of this Notice.

Procedures for Electronic Submission

The Cert's & Assurances Tab Page of the TEAM system contains fields for selecting the certifications and assurances to be submitted. Within that tab page are fields for the Applicant's authorized representative and its attorney to enter their personal identification numbers (PINs), and thus ''sign'' the certifications and assurances for electronic transmission to FTA. In certain circumstances, the Applicant may enter its PIN number in lieu of an electronic signature provided by its Attorney, provided the Applicant has on file the Affirmation of its Attorney in writing dated this Federal fiscal year as set forth in Appendix A of this Notice. Applicants may contact the appropriate Regional Office listed in this Notice or the TEAM Helpdesk for more information.

Procedures for Paper Submission

The following procedures apply to an Applicant that is unable to submit its certifications electronically. The Applicant must mark the certifications and assurances it is making on the Signature Page form in Appendix A of this Notice and submit it to FTA. The Applicant may signify compliance with all Categories by placing a single mark in the appropriate space at the top of the Signature Selection Page in Appendix A. In certain circumstances, the Applicant may certify in lieu of the signature of its Attorney, provided the Applicant has on file the Affirmation of its Attorney in writing dated this Federal fiscal year as set forth in Appendix A of this Notice. Applicants may contact the appropriate Regional Office listed in this Notice for more information.

References

The Transportation Equity Act for the 21st Century, Pub. L. 105–178, June 9, 1998, as amended by the TEA–21 Restoration Act 105–206, 112 Stat. 685, July 22, 1998, 49 U.S.C. chapter 53, Title 23, United States Code, U.S. DOT and FTA regulations at 49 CFR, and FTA Circulars.

Dated: January 9, 2001.

Nuria I. Fernandez,

Acting Administrator.

Appendix A

Federal Fiscal Year 2001 Certifications and Assurances for Federal Transit Administration Assistance Programs

In accordance with 49 U.S.C. 5323(n), the following certifications and assurances have been compiled for Federal Transit Administration (FTA) programs. FTA requests each Applicant to provide as many certifications and assurances as needed to cover all programs for which it will seek FTA assistance in Federal Fiscal Year 2001. FTA strongly encourages the Applicant to submit its certifications and assurances through FTA's Transportation Electronic Award and Management (TEAM) system.

The 15 Categories of certifications and assurances are listed by numbers 1 through 15 on the Cert's & Assurances tab page of the TEAM system and on the opposite side of the Signature Page at the end of this document. Categories 2 through 15 will apply to some, but not all, applicants. The designation of the 15 categories corresponds to the circumstances mandating submission of specific certifications, assurances, or agreements.

1. Certifications and Assurances Required of Each Applicant

Each Applicant for FTA assistance awarded must provide all certifications and assurances in this Category ''1.'' FTA may not award any Federal assistance until the Applicant provides these certifications and assurances by selecting Category ''1.''

A. Authority of Applicant and Its Representative

The authorized representative of the Applicant and legal counsel attorney who sign these certifications, assurances, and agreements affirm that both the Applicant and its authorized representative have adequate authority under state and local law and the by-laws or internal rules of the Applicant organization to:

(1) Execute and file the application for Federal assistance on behalf of the Applicant;

(2) Execute and file the required certifications, assurances, and agreements on behalf of the Applicant binding the Applicant; and

(3) Execute grant agreements and cooperative agreements with FTA on behalf of the Applicant.

B. Standard Assurances

The Applicant assures that it will comply with all applicable Federal statutes, regulations, executive orders, FTA circulars, and other Federal administrative requirements in carrying out any project supported by the FTA grant or cooperative agreement. The Applicant agrees that it is under a continuing obligation to comply with the terms and conditions of the grant agreement or cooperative agreement issued for its project with FTA. The Applicant recognizes that Federal laws, regulations, policies, and administrative practices might be modified from time to time and affect the implementation of the project. The Applicant agrees that the most recent Federal requirements will apply to the project, unless FTA issues a written determination otherwise.

C. Debarment, Suspension, and Other Responsibility Matters for Primary Covered Transactions

As required by U.S. DOT regulations on Governmentwide Debarment and Suspension (Nonprocurement) at 49 CFR 29.510:

(1) The Applicant (Primary Participant) certifies, to the best of its knowledge and belief, that it and its principals:

(a) Are not presently debarred, suspended, proposed for debarment, declared ineligible, or voluntarily excluded from covered transactions by any Federal department or agency;

(b) Have not, within a three (3) year period preceding this certification, been convicted of or had a civil judgment rendered against them for commission of fraud or a criminal

offense in connection with obtaining, attempting to obtain, or performing a public (Federal, state, or local) transaction or contract under a public transaction, violation of Federal or state antitrust statutes, or commission of embezzlement, theft, forgery, bribery, falsification or destruction of records, making false statements, or receiving stolen property;

(c) Are not presently indicted for or otherwise criminally or civilly charged by a governmental entity (Federal, state, or local) with commission of any of the offenses listed in subparagraph (1)(b) of this certification; and

(d) Have not within a three-year period preceding this certification had one or more public transactions (Federal, state, or local) terminated for cause or default.

(2) The Applicant also certifies that, if it later becomes aware of any information contradicting the statements of paragraph (1) above, it will promptly provide that information to FTA.

(3) If the Applicant (Primary Participant) is unable to certify to all statements in paragraphs (1) and (2) of this certification, it shall indicate so in its applications, or in the transmittal letter or message accompanying its annual certifications and assurances, and provide a written explanation to FTA.

D. Drug-Free Workplace Agreement

As required by U.S. DOT regulations, ''Drug-Free Workplace Requirements (Grants),'' 49 CFR part 29, Subpart F, as modified by 41 U.S.C. 702, the Applicant agrees that it will provide a drug-free workplace by:

(1) Publishing a statement notifying its employees that the unlawful manufacture, distribution, dispensing, possession, or use of a controlled substance is prohibited in its workplace and specifying the actions that will be taken against its employees for violation of that prohibition;

(2) Establishing an ongoing drug-free awareness program to inform its employees about:

(a) The dangers of drug abuse in the workplace;

(b) Its policy of maintaining a drug-free workplace;

(c) Any available drug counseling, rehabilitation, and employee assistance programs; and

(d) The penalties that may be imposed upon its employees for drug abuse violations occurring in the workplace;

(3) Making it a requirement that each of its employees to be engaged in the performance of the grant or cooperative agreement be given a copy of the statement required by paragraph (1) of this certification;

(4) Notifying each of its employees in the statement required by paragraph (1) of this certification that, as a condition of employment financed with Federal assistance provided by the grant or cooperative agreement, the employee will be required to:

(a) Abide by the terms of the statement; and

(b) Notify the employer (Applicant) in writing of any conviction for a violation of a criminal drug statute occurring in the workplace no later than five (5) calendar days after that conviction;

(5) Notifying FTA in writing, within ten (10) calendar days after receiving notice required by paragraph (4)(b) above from an employee or otherwise receiving actual notice of that conviction. The Applicant, as employer of any convicted employee, must provide notice, including position title, to every project officer or other designee on whose project activity the convicted employee was working. Notice shall include the identification number(s) of each affected grant or cooperative agreement;

(6) Taking one of the following actions within thirty (30) calendar days of receiving notice under paragraph (4)(b) of this agreement with respect to any employee who is so convicted:

(a) Taking appropriate personnel action against that employee, up to and including termination, consistent with the requirements of the Rehabilitation Act of 1973, as amended; or

(b) Requiring that employee to participate satisfactorily in a drug abuse assistance or rehabilitation program approved for such purposes by a Federal, state, or local health, law enforcement, or other appropriate agency; and

(7) Making a good faith effort to continue to maintain a drug-free workplace through implementation of paragraphs (1), (2), (3), (4), (5), and (6) of this agreement. The Applicant agrees to maintain a list identifying its headquarters location and each workplace it maintains in which project activities supported by FTA are conducted, and make that list readily accessible to FTA.

E. Intergovernmental Review Assurance

The Applicant assures that each application for Federal assistance it has submitted or will submit to FTA has been or will be submitted for intergovernmental review to the appropriate state and local agencies consistent with the requirements of the state or states affected. Specifically, the Applicant assures that it has fulfilled or will fulfill the obligations imposed on FTA by U.S. DOT regulations, ''Intergovernmental Review of Department of Transportation Programs and Activities,'' 49 CFR part 17.

F. Nondiscrimination Assurance

As required by 49 U.S.C. 5332 (which prohibits discrimination on the basis of race, color, creed, national origin, sex, or age, and prohibits discrimination in employment or business opportunity), Title VI of the Civil Rights Act of 1964, as amended, 42 U.S.C. 2000d, and U.S. DOT regulations, ''Nondiscrimination in Federally-Assisted Programs of the Department of Transportation—Effectuation of Title VI of the Civil Rights Act,'' 49 CFR part 21 at 21.7, the Applicant assures that it will comply with all requirements of 49 CFR part 21; FTA Circular 4702.1, ''Title VI Program Guidelines for Federal Transit Administration Recipients'', and other applicable directives, so that no person in the United States, on the basis of race, color, national origin, creed, sex, or age will be excluded from participation in, be denied the benefits of, or otherwise be subjected to discrimination in any program or activity (particularly in the level and quality of transportation services and transportation-related benefits) for which the Applicant receives Federal assistance awarded by the U.S. DOT or FTA as follows:

(1) The Applicant assures that each project will be conducted, property acquisitions will be undertaken, and project facilities will be operated in accordance with all applicable requirements of 49 U.S.C. 5332 and 49 CFR part 21, and understands that this assurance extends to its entire facility and to facilities operated in connection with the project.

(2) The Applicant assures that it will take appropriate action to ensure that any transferee receiving property financed with Federal assistance derived from FTA will comply with the applicable requirements of 49 U.S.C. 5332 and 49 CFR part 21.

(3) The Applicant assures that it will promptly take the necessary actions to effectuate this assurance, including notifying the public that complaints of discrimination in the provision of transportation-related services or benefits may be filed with U.S. DOT or FTA. Upon request by U.S. DOT or FTA, the Applicant assures that it will submit the required information pertaining to its compliance with these requirements.

(4) The Applicant assures that it will make any changes in its 49 U.S.C. 5332 and Title VI implementing procedures as U.S. DOT or FTA may request.

(5) As required by 49 CFR 21.7(a)(2), the Applicant will include in each third party contract or subagreement provisions to invoke the requirements of 49 U.S.C. 5332 and 49 CFR part 21, and include provisions to invoke those requirements in deeds and instruments recording the transfer of real property, structures, improvements.

G. Disadvantaged Business Enterprise Assurance

In accordance with 49 CFR 26.13(a), the Recipient assures that it shall not discriminate on the basis of race, color, national origin, or sex in the implementation of the project and in the award and performance of any third party contract, or subagreement supported with Federal assistance derived from the U.S. DOT or in the administration of its DBE program or the requirements of 49 CFR part 26. The Recipient assures that it shall take all necessary and reasonable steps under 49 CFR part 26 to ensure nondiscrimination in the award and administration of all third party contracts and subagreements supported with Federal assistance derived from the U.S. DOT. The Recipient's DBE program, as required by 49 CFR part 26 and approved by the U.S. DOT, will be incorporated by reference and made part of the grant agreement or cooperative agreement for any Federal assistance awarded by FTA or U.S. DOT. Implementation of this DBE program is a legal obligation of the Recipient, and failure to carry out its terms shall be treated as a violation of the grant agreement or cooperative agreement. Upon notification by the Government to the Recipient of its failure to implement its approved DBE program, the U.S. DOT may impose sanctions as provided for under 49 CFR part 26 and may, in appropriate cases, refer the matter for enforcement under 18 U.S.C. 1001, and/or

the Program Fraud Civil Remedies Act, 31 U.S.C. 3801 et seq.

H. Assurance of Nondiscrimination on the Basis of Disability

As required by U.S. DOT regulations, ''Nondiscrimination on the Basis of Handicap in Programs and Activities Receiving or Benefiting from Federal Financial Assistance,'' at 49 CFR part 27, the Applicant assures that, as a condition to the approval or extension of any Federal assistance awarded by FTA to construct any facility, obtain any rolling stock or other equipment, undertake studies, conduct research, or to participate in or obtain any benefit from any program administered by FTA, no otherwise qualified person with a disability shall be, solely by reason of that disability, excluded from participation in, denied the benefits of, or otherwise subjected to discrimination in any program or activity receiving or benefiting from Federal assistance administered by the FTA or any entity within U.S. DOT. The Applicant assures that project implementation and operations so assisted will comply with all applicable requirements of U.S. DOT regulations implementing the Rehabilitation Act of 1973, as amended, 29 U.S.C. 794, and the Americans with Disabilities Act of 1990, as amended, 42 U.S.C. 12101 et seq. at 49 CFR parts 27, 37, and 38, and any applicable regulations and directives issued by other Federal departments or agencies.

I. Procurement Compliance

The Applicant certifies that its procurements and procurement system will comply with all applicable requirements imposed by Federal laws, executive orders, or regulations and the requirements of FTA Circular 4220.1D, ''Third Party Contracting Requirements,'' and FTA third party contracting regulations when promulgated, as well as other requirements FTA may issue. The Applicant certifies that it will include in its contracts financed in whole or in part with FTA assistance all clauses required by Federal laws, executive orders, or regulations, and will ensure that each subrecipient and each contractor will also include in its subagreements and contracts financed in whole or in part with FTA assistance all applicable clauses required by Federal laws, executive orders, or regulations.

J. Certifications Prescribed by the Office of Management and Budget (SF–424B and SF–424D)

As required by the Office of Management and Budget (OMB), the Applicant certifies that it:

(1) Has the legal authority to apply for Federal assistance and the institutional, managerial, and financial capability (including funds sufficient to pay the non-Federal share of project cost) to ensure proper planning, management, and completion of the project described in its application;

(2) Will give FTA, the Comptroller General of the United States and, if appropriate, the state, through any authorized representative, access to and the right to examine all records, books, papers, or documents related to the award; and will establish a proper accounting system in accordance with generally accepted accounting standards or agency directives;

(3) Will establish safeguards to prohibit employees from using their positions for a purpose that constitutes or presents the appearance of personal or organizational conflict of interest or personal gain;

(4) Will initiate and complete the work within the applicable project time periods following receipt of FTA approval;

(5) Will comply with all statutes relating to nondiscrimination including, but not limited to:

(a) Title VI of the Civil Rights Act, 42 U.S.C. 2000d, which prohibits discrimination on the basis of race, color, or national origin;

(b) Title IX of the Education Amendments of 1972, as amended, 20 U.S.C. 1681 through 1683, and 1685 through 1687, and U.S. DOT regulations, ''Nondiscrimination on the Basis of Sex in Education Programs or Activities Receiving Federal Financial Assistance,'' 49 CFR part 25, which prohibit discrimination on the basis of sex;

(c) Section 504 of the Rehabilitation Act of 1973, as amended, 29 U.S.C. 794, which prohibits discrimination on the basis of handicaps;

(d) The Age Discrimination Act of 1975, as amended, 42 U.S.C. 6101 through 6107, which prohibit discrimination on the basis of age;

(e) The Drug Abuse Office and Treatment Act of 1972, Pub. L. 92–255, March 21, 1972, and amendments thereto, relating to nondiscrimination on the basis of drug abuse;

(f) The Comprehensive Alcohol Abuse and Alcoholism Prevention Act of 1970, Pub. L. 91–616, Dec. 31, 1970, and amendments thereto, relating to nondiscrimination on the basis of alcohol abuse or alcoholism;

(g) The Public Health Service Act of 1912, as amended, 42 U.S.C. 290dd–3 and 290ee–3, related to confidentiality of alcohol and drug abuse patient records;

(h) Title VIII of the Civil Rights Act, 42 U.S.C. 3601 et seq., relating to nondiscrimination in the sale, rental, or financing of housing;

(i) Any other nondiscrimination provisions in the specific statutes under which Federal assistance for the project may be provided including, but not limited to section 1101(b) of the Transportation Equity Act for the 21st Century, 23 U.S.C. 101 note, which provides for participation of disadvantaged business enterprises in FTA programs; and

(j) The requirements of any other nondiscrimination statute(s) that may apply to the project;

(6) Will comply, or has complied, with the requirements of Titles II and III of the Uniform Relocation Assistance and Real Property Acquisition Policies Act of 1970, as amended, (Uniform Relocation Act) 42 U.S.C. 4601 et seq., which provide for fair and equitable treatment of persons displaced or whose property is acquired as a result of Federal of federally-assisted programs. These requirements apply to all interests in real property acquired for project purposes regardless of Federal participation in purchases. As required by U.S. DOT regulations, ''Uniform Relocation Assistance and Real Property Acquisition for Federal and Federally Assisted Programs,'' at 49 CFR 24.4, and sections 210 and 305 of the Uniform Relocation Act, 42 U.S.C. 4630 and 4655, the Applicant assures that it has the requisite authority under applicable state and local law and will comply or has complied with the requirements of the Uniform Relocation Act, 42 U.S.C. 4601 et seq., and U.S. DOT regulations, ''Uniform Relocation Assistance and Real Property Acquisition for Federal and Federally Assisted Programs,'' 49 CFR part 24 including, but not limited to the following:

(a) The Applicant will adequately inform each affected person of the benefits, policies, and procedures provided for in 49 CFR part 24;

(b) The Applicant will provide fair and reasonable relocation payments and assistance required by 42 U.S.C. 4622, 4623, and 4624; 49 CFR part 24; and any applicable FTA procedures, to or for families, individuals, partnerships, corporations or associations displaced as a result of any project financed with FTA assistance;

(c) The Applicant will provide relocation assistance programs offering the services described in 42 U.S.C. 4625 to such displaced families, individuals, partnerships, corporations, or associations in the manner provided in 49 CFR part 24 and FTA procedures;

(d) Within a reasonable time before displacement, the Applicant will make available comparable replacement dwellings to displaced families and individuals as required by 42 U.S.C. 4625(c)(3);

(e) The Applicant will carry out the relocation process in such a manner as to provide displaced persons with uniform and consistent services, and will make available replacement housing in the same range of choices with respect to such housing to all displaced persons regardless of race, color, religion, or national origin;

(f) In acquiring real property, the Applicant will be guided to the greatest extent practicable under state law, by the real property acquisition policies of 42 U.S.C. 4651 and 4652;

(g) The Applicant will pay or reimburse property owners for necessary expenses as specified in 42 U.S.C. 4653 and 4654, with the understanding that FTA will participate in the Applicant's eligible costs of providing payments for those expenses as required by 42 U.S.C. 4631;

(h) The Applicant will execute such amendments to third party contracts and subagreements financed with FTA assistance and execute, furnish, and be bound by such additional documents as FTA may determine necessary to effectuate or implement the assurances provided herein; and

(i) The Applicant agrees to make these assurances part of or incorporate them by reference into any third party contract or subagreement, or any amendments thereto, relating to any project financed by FTA involving relocation or land acquisition and provide in any affected document that these relocation and land acquisition provisions shall supersede any conflicting provisions;

(7) To the extent applicable, will comply with the Davis-Bacon Act, as amended, 40

U.S.C. 276a through 276a(7), the Copeland Act, as amended, 18 U.S.C. 874 and 40 U.S.C. 276c, and the Contract Work Hours and Safety Standards Act, as amended, 40 U.S.C. 327 through 333, regarding labor standards for federally-assisted subagreements;

(8) To the extent applicable, will comply with flood insurance purchase requirements of section 102(a) of the Flood Disaster Protection Act of 1973, as amended, 42 U.S.C. 4012a(a), requiring recipients in a special flood hazard area to participate in the program and purchase flood insurance if the total cost of insurable construction and acquisition is $10,000 or more;

(9) Will comply with the Lead-Based Paint Poisoning Prevention Act, 42 U.S.C. 4801, which prohibits the use of lead-based paint in construction or rehabilitation of residence structures;

(10) Will not dispose of, modify the use of, or change the terms of the real property title, or other interest in the site and facilities on which a construction project supported with FTA assistance takes place without permission and instructions from the awarding agency;

(11) Will record the Federal interest in the title of real property in accordance with FTA directives and will include a covenant in the title of real property acquired in whole or in part with Federal assistance funds to assure nondiscrimination during the useful life of the project;

(12) Will comply with FTA requirements concerning the drafting, review, and approval of construction plans and specifications of any construction project supported with FTA assistance. As required by U.S. DOT regulations, ''Seismic Safety,'' 49 CFR 41.117(d), before accepting delivery of any building financed with FTA assistance, it will obtain a certificate of compliance with 49 CFR part 41 seismic design and construction requirements;

(13) Will provide and maintain competent and adequate engineering supervision at the construction site of any project supported with FTA assistance to ensure that the complete work conforms with the approved plans and specifications and will furnish progress reports and such other information as may be required by FTA or the state;

(14) Will comply with environmental standards that may be prescribed to implement the following Federal laws and executive orders:

(a) Institution of environmental quality control measures under the National Environmental Policy Act of 1969, as amended, 42 U.S.C. 4321 et seq. and Executive Order No. 11514, as amended, 42 U.S.C. 4321 note;

(b) Notification of violating facilities pursuant to Executive Order No. 11738, 42 U.S.C. 7606 note;

(c) Protection of wetlands pursuant to Executive Order No. 11990, 42 U.S.C. 4321 note;

(d) Evaluation of flood hazards in floodplains in accordance with Executive Order 11988, 42 U.S.C. 4321 note;

(e) Assurance of project consistency with the approved state management program developed pursuant to the requirements of the Coastal Zone Management Act of 1972, as amended, 16 U.S.C. 1451 et seq.;

(f) Conformity of Federal actions to State (Clean Air) Implementation Plans under section 176(c) of the Clean Air Act of 1955, as amended, 42 U.S.C. 7401 et seq.;

(g) Protection of underground sources of drinking water under the Safe Drinking Water Act of 1974, as amended, 42 U.S.C. 300h et seq.;

(h) Protection of endangered species under the Endangered Species Act of 1973, as amended, Endangered Species Act of 1973, as amended, 16 U.S.C. 1531 et seq.; and

(i) Environmental protections for Federal transit programs, including, but not limited to protections for a park, recreation area, or wildlife or waterfowl refuge of national, state, or local significance or any land from a historic site of national, state, or local significance used in a transit project as required by 49 U.S.C. 303;

(j) Will comply with the Wild and Scenic Rivers Act of 1968, as amended, 16 U.S.C. 1271 et seq. relating to protecting components of the national wild and scenic rivers systems; and

(k) Will assist FTA in assuring compliance with section 106 of the National Historic Preservation Act of 1966, as amended, 16 U.S.C. 470f, Executive Order No. 11593 (identification and protection of historic properties), 16 U.S.C. 470 note, and the Archaeological and Historic Preservation Act of 1974, as amended, 16 U.S.C. 469a–1 et seq.;

(15) To the extent applicable, will comply with provisions of the Hatch Act, 5 U.S.C. 1501 through 1508, and 7324 through 7326, which limit the political activities of state and local agencies and their officers and employees whose principal employment activities are financed in whole or part with Federal funds including a Federal loan, grant, or cooperative agreement, but pursuant to 23 U.S.C. 142(g), does not apply to a nonsupervisory employee of a transit system (or of any other agency or entity performing related functions) receiving FTA assistance to whom the Hatch Act does not otherwise apply;

(16) Will comply with the National Research Act, Pub. L. 93–348, July 12, 1974, as amended, regarding the protection of human subjects involved in research, development, and related activities supported by Federal assistance and DOT regulations, ''Protection of Human Subjects,'' 49 CFR part 11;

(17) Will comply with the Laboratory Animal Welfare Act of 1966, as amended, 7 U.S.C. 2131 et seq. pertaining to the care, handling, and treatment of warm blooded animals held for research, teaching, or other activities supported by FTA assistance;

(18) Will have performed the financial and compliance audits required by the Single Audit Act Amendments of 1996, 31 U.S.C. 7501 et seq. and OMB Circular No. A–133, ''Audits of States, Local Governments, and Non-Profit Organizations and Department of Transportation provisions of OMB A–133 Compliance Supplement, March 2000''

(19) Will comply with all applicable requirements of all other Federal laws, executive orders, regulations, and policies governing the project.

2. Lobbying Certification for an Application Exceeding $100,000

An Applicant that submits, or intends to submit this fiscal year, an application for Federal assistance exceeding $100,000 must provide the following certification. FTA may not award Federal assistance for an application exceeding $100,000 until the Applicant provides this certification by selecting Category ''2.''

A. As required by U.S. DOT regulations, ''New Restrictions on Lobbying,'' at 49 CFR 20.110, the Applicant's authorized representative certifies to the best of his or her knowledge and belief that for each application for a Federal assistance exceeding $100,000:

(1) No Federal appropriated funds have been or will be paid, by or on behalf of the Applicant, to any person for influencing or attempting to influence an officer or employee of any agency, a Member of Congress, an officer or employee of Congress, or an employee of a Member of Congress pertaining to the award of any Federal assistance, or the extension, continuation, renewal, amendment, or modification of any Federal assistance agreement; and

(2) If any funds other than Federal appropriated funds have been or will be paid to any person for influencing or attempting to influence an officer or employee of any agency, a Member of Congress, an officer or employee of Congress, or an employee of a Member of Congress in connection with any application to FTA for Federal assistance, the Applicant assures that it will complete and submit Standard Form-LLL, ''Disclosure Form to Report Lobbying,'' including the information required by the form's instructions, which may be amended to omit such information as permitted by 31 U.S.C. 1352.

B. The Applicant understands that this certification is a material representation of fact upon which reliance is placed and that submission of this certification is a prerequisite for providing Federal assistance for a transaction covered by 31 U.S.C. 1352. The Applicant also understands that any person who fails to file a required certification shall be subject to a civil penalty of not less than $10,000 and not more than $100,000 for each such failure.

3. Certification Pertaining to the Effects of the Project on Private Mass Transportation Companies

An Applicant that is a state or local government seeking Federal assistance authorized by 49 U.S.C. chapter 53 to acquire the property of or an interest therein of a private mass transportation company or to operate mass transportation equipment or a facility in competition with or in addition to transportation service provided by an existing mass transportation company must provide the following certification. FTA may not award Federal assistance for that project until the Applicant provides this certification by selecting Category ''3.''

As required by 49 U.S.C. 5323(a)(1), the Applicant certifies that before it acquires property or an interest in property of a private mass transportation company or operates mass transportation equipment or a

facility in competition with or in addition to transportation service provided by an existing mass transportation company it has or will have:

A. Found that the assistance is essential to carrying out a program of projects as determined by the plans and programs of the metropolitan planning organization;

B. Provided for the participation of private mass transportation companies to the maximum extent feasible consistent with applicable FTA requirements and policies;

C. Paid just compensation under state or local law to a private mass transportation company for its franchises or property acquired; and

D. Acknowledged that the assistance falls within the labor standards compliance requirements of 49 U.S.C. 5333(a) and 5333(b).

4. Public Hearing Certification for a Capital Project That Will Substantially Affect a Community or Its Transit Service

An Applicant seeking Federal assistance authorized by 49 U.S.C. chapter 53 for a capital project that will substantially affect a community or the community's mass transportation service must provide the following certification. FTA may not award Federal assistance for that project until the Applicant provides this certification by selecting Category ''4.''

As required by 49 U.S.C. 5323(b), the Applicant certifies that it has, or before submitting its application, will have:

A. Provided an adequate opportunity for a public hearing with adequate prior notice of the proposed project published in a newspaper of general circulation in the geographic area to be served;

B. Held that hearing and provided FTA a transcript or detailed report summarizing the issues and responses, unless no one with a significant economic, social, or environmental interest requests a hearing;

C. Considered the economic, social, and environmental effects of the project; and

D. Determined that the project is consistent with official plans for developing the urban area.

5. Certification Of Pre-Award and Post-Delivery Reviews Required for Acquisition of Rolling Stock

An Applicant seeking FTA assistance to acquire rolling stock must provide the following certification. FTA may not provide assistance to acquire rolling stock until the Applicant provides this certification by selecting Category ''5.''

As required by 49 U.S.C. 5323(m) and implementing FTA regulations at 49 CFR 663.7, the Applicant certifies that it will comply with the requirements of 49 CFR part 663 when procuring revenue service rolling stock. Among other things, the Applicant agrees to conduct or cause to be conducted the requisite pre-award and post-delivery reviews, and maintain on file the certifications required by 49 CFR part 663, subparts B, C, and D.

6. Bus Testing Certification Required for New Bus Acquisitions

An Applicant seeking FTA assistance to acquire new buses must provide the following certification. FTA may not provide assistance for the acquisition of new buses until the Applicant provides this certification by selecting Category ''6.''

As required by FTA regulations, ''Bus Testing,'' at 49 CFR 665.7, the Applicant certifies that before expending any Federal assistance to acquire the first bus of any new bus model or any bus model with a new major change in configuration or components or authorizing final acceptance of that bus (as described in 49 CFR part 665):

A. The model of the bus will have been tested at a bus testing facility approved by FTA; and

B. It will have received a copy of the test report prepared on the bus model.

7. Charter Service Agreement

An Applicant seeking FTA assistance to acquire or operate transportation equipment or facilities using Federal assistance authorized by 49 U.S.C. chapter 53 or Title 23, U.S.C. (except 49 U.S.C. 5310) must enter into the following charter service agreement. FTA may not provide assistance for those projects until the Applicant enters into this agreement by selecting Category ''7.''

A. As required by 49 U.S.C. 5323(d) and FTA regulations, ''Charter Service,'' at 49 CFR 604.7, the Applicant agrees that it and its recipients will:

(1) Provide charter service that uses equipment or facilities acquired with Federal assistance authorized for 49 U.S.C. 5307, 5309, or 5311 or Title 23 U.S.C., only to the extent that there are no private charter service operators willing and able to provide the charter service that it or its recipients desire to provide, unless one or more of the exceptions in 49 CFR 604.9 applies; and

(2) Comply with the provisions of 49 CFR part 604 before they provide any charter service using equipment or facilities acquired with Federal assistance authorized for the above statutes.

B. The Applicant understands that the requirements of 49 CFR part 604 will apply to any charter service provided, the definitions in 49 CFR part 604 apply to this agreement, and violation of this agreement may require corrective measures and the imposition of penalties, including debarment from the receipt of further Federal assistance for transportation.

8. School Transportation Agreement

An Applicant seeking FTA assistance to acquire or operate transportation facilities and equipment using Federal assistance authorized by 49 U.S.C. chapter 53 or Title 23, U.S.C. must agree as follows. FTA may not provide assistance for transportation facilities until the Applicant enters into this Agreement by selecting Category ''8.''

A. As required by 49 U.S.C. 5323(f) and FTA regulations, ''School Bus Operations,'' at 49 CFR 605.14, the Applicant agrees that it and all its recipients will:

(1) Engage in school transportation operations in competition with private school transportation operators only to the extent permitted by 49 U.S.C. 5323(f), and implementing regulations; and

(2) Comply with the requirements of 49 CFR part 605 before providing any school transportation using equipment or facilities acquired with Federal assistance awarded by FTA and authorized by 49 U.S.C. chapter 53 or Title 23 U.S.C. for transportation projects.

B. The Applicant understands that the requirements of 49 CFR part 605 will apply to any school transportation it provides, the definitions of 49 CFR part 605 apply to this school transportation agreement, and a violation of this agreement may require corrective measures and the imposition of penalties, including debarment from the receipt of further Federal assistance for transportation.

9. Certification Required for the Direct Award of FTA Assistance to an Applicant for Its Demand Responsive Service

An Applicant seeking direct Federal assistance to support demand responsive service must provide the following certification. FTA may not award Federal assistance directly to an Applicant to support its demand responsive service until the Applicant provides this certification by selecting Category ''9.''

As required by U.S. DOT regulations, ''Transportation Services for Individuals with Disabilities (ADA),'' at 49 CFR 37.77, the Applicant certifies that its demand responsive service offered to persons with disabilities, including persons who use wheelchairs, is equivalent to the level and quality of service offered to persons without disabilities. When viewed in its entirety, the Applicant's service for persons with disabilities is provided in the most integrated setting feasible and is equivalent with respect to: (1) response time, (2) fares, (3) geographic service area, (4) hours and days of service, (5) restrictions on trip purpose, (6) availability of information and reservation capability, and (7) constraints on capacity or service availability.

10. Substance Abuse Certifications

If the Applicant is required by Federal regulations to provide the following substance abuse certifications, FTA may not provide Federal assistance to that Applicant until it provides these certifications by selecting Category ''10.''

A. Alcohol Testing Certification

As required FTA regulations, ''Prevention of Alcohol Misuse in Transit Operations,'' at 49 CFR 654.83, the Applicant certifies that it has established and implemented an alcohol misuse prevention program in compliance with 49 CFR part 654, and if the Applicant has employees regulated by the U.S. Federal Railroad Administration (U.S. FRA), the Applicant also certifies that it has for those employees an alcohol misuse prevention program in compliance with U.S. FRA regulations, ''Control of Alcohol and Drug Use,'' 49 CFR part 219.

B. Anti-Drug Program Certification

As required by FTA regulations ''Prevention of Prohibited Drug Use in Transit Operations,'' at 49 CFR 653.83, the Applicant certifies that it has established and implemented an anti-drug program and conducted employee training in compliance with 49 CFR part 653, and if the Applicant also has employees regulated by the U.S.

FRA, the Applicant also certifies that it has for those employees an anti-drug program in compliance with U.S. FRA regulations, ''Control of Alcohol and Drug Use,'' 49 CFR part 219.

11. Certification Required for Interest or Other Financing Costs

The Applicant must provide the following certification in connection with requests for reimbursements of interest or other financing costs of capital projects. FTA may not provide assistance to support those costs until the Applicant provides this certification by selecting Category ''11.''

As required by 49 U.S.C. 5307(g), 49 U.S.C. 5309(g)(2)(B), 49 U.S.C. 5309(g)(3)(A), and 49 U.S.C. 5309(n), the Applicant certifies that it will not seek reimbursement for interest and other financing costs unless its records demonstrate it has used reasonable diligence in seeking the most favorable financing terms underlying those costs, to the extent FTA might require.

12. Certifications and Assurances for the Urbanized Area Formula Program, the Job Access and Reverse Commute Program, and the Clean Fuels Formula Program

Each Applicant to FTA for Urbanized Area Formula Program assistance authorized by 49 U.S.C. 5307, each Applicant for Job Access and Reverse Commute Program assistance authorized by section 3037 of the Transportation Equity Act for the 21st Century, 49 U.S.C. 5309 note, and each Applicant for the Clean Fuels Formula Program assistance authorized by 49 U.S.C. 5308 must provide the following certifications in connection with its application. FTA may not award Urbanized Area Formula Program assistance, the Job Access and Reverse Commute Program assistance, or the Clean Fuels Formula Program assistance to the Applicant until the Applicant provides these certifications and assurances by selecting Category ''12'' on the Cert's & Assurances tab page of the TEAM system or on the Signature Page at the end of this document. A state or other Applicant providing certifications and assurances on behalf of its prospective subrecipients is expected to obtain sufficient documentation from those subrecipients to assure the validity of its certifications and assurances.

In addition, each Applicant that has received Transit Enhancement funding authorized by 49 U.S.C. 5307(k)(1) must include within its quarterly report for the fourth quarter of the preceding Federal fiscal year a list of the projects carried out during the preceding Federal fiscal year with those Transit Enhancement funds. That list constitutes the report of transit projects carried out during the preceding fiscal year to be submitted as part of the Applicant's annual certifications and assurances, as required by 49 U.S.C. 5307(k)(3), and is thus incorporated by reference and made part of that Applicant's annual certifications and assurances. FTA may not award Urbanized Area Formula Program assistance to any Applicant that has received Transit Enhancement funding authorized by 49 U.S.C. 5307(k)(1), unless that Applicant's quarterly report for the fourth quarter of the preceding Federal fiscal year has been submitted to FTA and that report contains the requisite list.

A. Certifications Required by Statute

As required by 49 U.S.C. 5307(d)(1)(A) through (J), the Applicant certifies that:

(a) It has or will have the legal, financial, and technical capacity to carry out the proposed program of projects;

(b) It will adequately maintain the equipment and facilities;

(c) It will ensure that elderly or handicapped persons, or any person presenting a Medicare card issued to himself or herself pursuant to title II or title XVIII of the Social Security Act (42 U.S.C. 401 *et seq.* or 42 U.S.C. 1395 *et seq.*), will be charged for transportation during non-peak hours using or involving a facility or equipment of a project financed with Federal assistance authorized for 49 U.S.C. 5307 or for section 3037 of the Transportation Equity Act for the 21st Century (TEA–21), 49 U.S.C. 5309 note, not more than fifty (50) percent of the peak hour fare;

(d) In carrying out a procurement financed with Federal assistance authorized for the Urbanized Area Formula Program at 49 U.S.C. 5307 or section 3037 of TEA–21, 49 U.S.C. 5309 note, it will use competitive procurement (as defined or approved by the Secretary), it will not use a procurement using exclusionary or discriminatory specifications, and it will comply with applicable Buy America laws in carrying out a procurement;

(e) It has complied or will comply with the requirements of 49 U.S.C. 5307(c). Specifically, it has made available or before submitting its application it will make available: (1) to the public information on amounts available for the Urbanized Area Formula Program at 49 U.S.C. 5307 and, if applicable, the Job Access and Reverse Commute Grant Program, 49 U.S.C. 5309 note, and the program of projects it proposes to undertake with those funds; (2) in consultation with interested parties including private transportation providers, develop a proposed program of projects for activities to be financed; (3) publish a proposed program of projects in a way that affected citizens, private transportation providers, and local elected officials have the opportunity to examine the proposed program and submit comments on the proposed program and the performance of the Applicant; (4) provide an opportunity for a public hearing to obtain the views of citizens on the proposed program of projects; and (5) ensure that the proposed program of projects provides for the coordination of transportation services assisted under 49 U.S.C. 5336 with transportation services assisted by another Federal Government source; (6) consider comments and views received, especially those of private transportation providers, in preparing the final program of projects; and (7) make the final program of projects available to the public;

(f) It has or will have available and will provide the amount of funds required by 49 U.S.C. 5307(e) and applicable FTA policy specifying Federal and local shares of project costs;

(g) It will comply with: 49 U.S.C. 5301(a) (requirements for transportation systems that maximize mobility and minimize fuel consumption and air pollution); 49 U.S.C. 5301(d) (requirements for transportation of the elderly and persons with disabilities); 49 U.S.C. 5303 through 5306 (planning requirements); and 49 U.S.C. 5310(a) through (d) (programs for the elderly and persons with disabilities);

(h) It has a locally developed process to solicit and consider public comment before raising fares or implementing a major reduction of transportation; and

(i) As required by 49 U.S.C. 5307(d)(1)(J), unless it has determined that it is not necessary to expend one (1) percent of the amount of Federal assistance it receives for this fiscal year apportioned in accordance with 49 U.S.C. 5336 for transit security projects, it will expend at least one (1) percent of the amount of that assistance for transit security projects, including increased lighting in or adjacent to a transit system (including bus stops, subway stations, parking lots, and garages), increased camera surveillance of an area in or adjacent to that system, emergency telephone line or lines to contact law enforcement or security personnel in an area in or adjacent to that system, and any other project intended to increase the security and safety of an existing or planned transit system.

(2) As required by 49 U.S.C. 5307(k)(3), if it has received Transit Enhancement funds authorized by 49 U.S.C. 5307(k)(1), its quarterly report for the fourth quarter of the preceding Federal fiscal year includes a list of projects implemented in the preceding Federal fiscal year using Transit Enhancement funds, and that report is made part of its certifications and assurances.

B. Certification Required for Capital Leasing

As required by FTA regulations, ''Capital Leases,'' at 49 CFR 639.15(b)(1) and 639.21, to the extent the Applicant uses Federal assistance authorized for 49 U.S.C. 5307 or section 3037 of TEA–21, 49 U.S.C. 5309 note, to acquire any capital asset by lease, the Applicant certifies that:

(1) It will not use Federal assistance authorized for 49 U.S.C. 5307 or section 3037 of TEA–21, 49 U.S.C. 5309 note, to finance the cost of leasing any capital asset until it performs calculations demonstrating that leasing the capital asset would be more cost-effective than purchasing or constructing a similar asset;

(2) It will complete these calculations before entering into the lease or before receiving a capital grant for the asset, whichever is later; and

(3) It will not enter into a capital lease for which FTA can only provide incremental funding unless it has the financial capacity to meet its future obligations under the lease in the event Federal assistance is not available for capital projects in subsequent years.

C. Certification Required for Sole Source Purchase of Associated Capital Maintenance Item

As required by 49 U.S.C. 5325(c), to the extent that the Applicant procures an associated capital maintenance item under

the authority of 49 U.S.C. 5307(b)(1), the Applicant certifies that it will use competition to procure an associated capital maintenance item unless the manufacturer or supplier of that item is the only source for the item and the price of the item is no more than the price similar customers pay for the item, and maintain sufficient records pertaining to each such procurement on file easily retrievable for FTA inspection.

D. Clean Fuels Program Certification

As required by 49 U.S.C. 5308(c)(2), the Applicant certifies that, in connection with any application for assistance authorized for the Clean Fuels Formula Program, vehicles purchased with grant funds made available for 49 U.S.C. 5308 will be operated only with clean fuels.

13. Certifications and Assurances for the Elderly and Persons With Disabilities Program

An Applicant that intends to administer the Elderly and Persons with Disabilities Program on behalf of a state must provide the following certifications and assurances. In providing certifications and assurances on behalf of its prospective subrecipients, the Applicant is expected to obtain sufficient documentation from those subrecipients to assure the validity of its certifications and assurances. FTA may not award assistance for the Elderly and Persons with Disabilities Program until the Applicant provides these certifications and assurances by selecting Category ''13.''

The Applicant administering on behalf of the state the Elderly and Persons with Disabilities Program authorized by 49 U.S.C. 5310 certifies and assures that the following requirements and conditions will be fulfilled:

A. The state organization serving as the Applicant and each subrecipient has or will have the necessary legal, financial, and managerial capability to apply for, receive and disburse Federal assistance authorized for 49 U.S.C. 5310; and to implement and manage the project.

B. The state assures that each subrecipient either is recognized under state law as a private nonprofit organization with the legal capability to contract with the state to carry out the proposed project, or is a public body that has met the statutory requirements to receive Federal assistance authorized for 49 U.S.C. 5310.

C. The subrecipient's application for 49 U.S.C. 5310 assistance contains information from which the state concludes that the transit service provided or offered to be provided by existing public or private transit operators is unavailable, insufficient, or inappropriate to meet the special needs of the elderly and persons with disabilities.

D. The state assures that sufficient non-Federal funds have been or will be committed to provide the required local share.

E. The subrecipient has, or will have by the time of delivery, sufficient funds to operate and maintain the vehicles and equipment purchased with Federal assistance awarded for this project.

F. The state assures that before issuing the state's formal approval of a project, its Elderly and Persons with Disabilities Formula Program is included in the Statewide Transportation Improvement Program as required by 23 U.S.C. 135; all projects in urbanized areas recommended for approval are included in the annual element of the metropolitan Transportation Improvement Program in which the subrecipient is located; and any public body that is a prospective subrecipient of capital assistance has provided an opportunity for a public hearing.

G. The state recognizes that the subrecipient, rather than the state itself, will be ultimately responsible for implementing many Federal requirements covered by the certifications the state has signed. Having taken appropriate measures to secure the necessary compliance by each subrecipient, the state assures, on behalf of each subrecipient, that each subrecipient has:

(1) Coordinated or will coordinate to the maximum extent feasible with other transportation providers and users, including social service agencies authorized to purchase transit service;

(2) Complied or will comply with all applicable civil rights requirements;

(3) Complied or will comply with applicable requirements of U.S. DOT regulations on participation of disadvantaged business enterprise in U.S. DOT programs;

(4) Complied or will comply with Federal requirements regarding transportation of elderly persons and persons with disabilities;

(5) Complied or will comply with the transit employee protective provisions of 49 U.S.C. 5333(b), by one of the following actions: (1) signing the Special Warranty for the Nonurbanized Area Formula Program, (2) agreeing to alternative comparable arrangements approved by the Department of Labor (DOL), or (3) obtaining a waiver from DOL; and the state has certified the subrecipient's compliance to DOL;

(6) Complied or will comply with 49 CFR part 604 in the provision of any charter service provided with equipment or facilities acquired with FTA assistance;

(7) Complied with or will comply with applicable provisions of 49 CFR part 605 pertaining to school transportation operations;

(8) Viewing its demand responsive service to the general public in its entirety, complied or will comply with the requirement to provide demand responsive service to persons with disabilities, including persons who use wheelchairs, meeting the standard of equivalent service set forth in 40 CFR 37.77(c), if it purchases non-accessible vehicles for use in demand responsive service for the general public;

(9) Established or will establish a procurement system and conducted or will conduct its procurements in compliance with all applicable requirements imposed by Federal laws, executive orders, or regulations and the requirements of FTA Circular 4220.1D, ''Third Party Contracting Requirements,'' and other implementing requirements FTA may issue;

(10) Complied or will comply with the requirement that its project provides for the participation of private mass transportation companies to the maximum extent feasible;

(11) Paid or will pay just compensation under state or local law to each private mass transportation company for its franchise or property acquired under the project;

(12) Complied or will comply with all applicable lobbying requirements for each application exceeding $100,000;

(13) Complied or will comply with all applicable nonprocurement suspension and debarment requirements;

(14) Complied or will comply with all applicable bus testing requirements for new bus models; and

(15) Complied or will comply with all applicable pre-award and post-delivery review requirements.

H. Unless otherwise noted, each of the subrecipient's projects qualifies for a categorical exclusion and does not require further environmental approvals, as described in the joint FHWA/FTA regulations, ''Environmental Impact and Related Procedures,'' at 23 CFR 771.117(c). The state certifies that financial assistance will not be provided for any project that does not qualify for a categorical exclusion described in 23 CFR 771.117(c) until FTA has made the required environmental finding. The state further certifies that no financial assistance will be provided for a project requiring a conformity finding in accordance with the Environmental Protection Agency's Clean Air Conformity regulations at 40 CFR parts 51 and 93, until FTA makes the required conformity finding.

I. The state will enter into a written agreement with each subrecipient stating the terms and conditions of assistance by which the project will be undertaken and completed.

J. The state recognizes the authority of FTA, U.S. DOT, and the Comptroller General of the United States to conduct audits and reviews to verify compliance with the foregoing requirements and stipulations, and assures that, upon request, the SIB and its subrecipients, as well as the states, will make the necessary records available to FTA, U.S. DOT and the Comptroller General of the United States. The state also acknowledges its obligation under 49 CFR 18.40(a) to monitor project activities carried out by its subrecipients to assure compliance with applicable Federal requirements.

14. Certifications and Assurances for the Nonurbanized Area Formula Program

An Applicant that intends to administer the Nonurbanized Area Formula Program on behalf of a state must provide the following certifications and assurances. In providing certifications and assurances on behalf of its prospective subrecipients, the Applicant is expected to obtain sufficient documentation from those subrecipients to assure the validity of its certifications and assurances. FTA may not award Nonurbanized Area Formula Program assistance to the Applicant until the Applicant provides these certifications and assurances by selecting Categories ''1'' through ''11'' and ''14.''

The Applicant administering on behalf of the state the Nonurbanized Area Formula Program authorized by 49 U.S.C. 5311 certifies and assures that the following requirements and conditions will be fulfilled:

A. The state organization serving as the Applicant and each subrecipient has or will

have the necessary legal, financial, and managerial capability to apply for, receive and disburse Federal assistance authorized for 49 U.S.C. 5311; and to implement and manage the project.

B. The state assures that sufficient non-Federal funds have been or will be committed to provide the required local share.

C. The state assures that before issuing the state's formal approval of the project, its Nonurbanized Area Formula Program is included in the Statewide Transportation Improvement Program as required by 23 U.S.C. 135; to the extent applicable, projects are included in a metropolitan Transportation Improvement Program.

D. The state has provided for a fair and equitable distribution of Federal assistance authorized for 49 U.S.C. 5311 within the state, including Indian reservations within the state.

E. The state recognizes that the subrecipient, rather than the state itself, will be ultimately responsible for implementing many Federal requirements covered by the certifications the state has signed. Having taken appropriate measures to secure the necessary compliance by each subrecipient, the state assures, on behalf of each subrecipient, that each subrecipient has:

(1) Coordinated or will coordinate to the maximum extent feasible with other transportation providers and users, including social service agencies authorized to purchase transit service;

(2) Complied or will comply with all applicable civil rights requirements;

(3) Complied or will comply with applicable requirements of U.S. DOT regulations on participation of disadvantaged business enterprise in U.S. DOT programs;

(4) Complied or will comply with Federal requirements regarding transportation of elderly persons and persons with disabilities;

(5) Complied or will comply with the transit employee protective provisions of 49 U.S.C. 5333(b), by one of the following actions: (1) Signing the Special Warranty for the Nonurbanized Area Formula Program, (2) agreeing to alternative comparable arrangements approved by the Department of Labor (DOL), or (3) obtaining a waiver from DOL; and the state has certified the subrecipient's compliance to DOL;

(6) Complied or will comply with 49 CFR part 604 in the provision of any charter service provided with equipment or facilities acquired with FTA assistance;

(7) Complied with or will comply with applicable provisions of 49 CFR part 605 pertaining to school transportation operations;

(8) Viewing its demand responsive service to the general public in its entirety, complied or will comply with the requirement to provide demand responsive service to persons with disabilities, including persons who use wheelchairs, meeting the standard of equivalent service set forth in 40 CFR 37.77(c), if it purchases non-accessible vehicles for use in demand responsive service for the general public;

(9) Established or will establish a procurement system and conducted or will conduct its procurements in compliance with all applicable requirements imposed by Federal laws, executive orders, or regulations and the requirements of FTA Circular 4220.1D, ''Third Party Contracting Requirements,'' and other implementing requirements FTA may issue;

(10) Complied or will comply with the requirement that its project provides for the participation of private enterprise to the maximum extent feasible;

(11) Paid or will pay just compensation under state or local law to each private mass transportation company for its franchise or property acquired under the project;

(12) Complied or will comply with all applicable lobbying requirements for each application exceeding $100,000;

(13) Complied or will comply with all applicable nonprocurement suspension and debarment requirements;

(14) Complied or will comply with all applicable bus testing requirements for new bus models;

(15) Complied or will comply with all applicable pre-award and post-delivery review requirements;

(16) Complied with or will comply with all assurances FTA requires for projects involving real property; and

(17) Complied with, or to the extent required by FTA will comply with, applicable anti-drug and alcohol program requirements.

F. Unless otherwise noted, each of the subrecipient's projects qualifies for a categorical exclusion and does not require further environmental approvals, as described in the joint FHWA/FTA regulations, ''Environmental Impact and Related Procedures,'' at 23 CFR 771.117(c). The state certifies that financial assistance will not be provided for any project that does not qualify for a categorical exclusion described in 23 CFR 771.117(c) until FTA has made the required environmental finding. The state further certifies that no financial assistance will be provided for a project requiring a conformity finding in accordance with the Environmental Protection Agency's Clean Air Conformity regulations at 40 CFR parts 51 and 93, until FTA makes the required conformity finding.

G. The state will enter into a written agreement with each subrecipient stating the terms and conditions of assistance by which the project will be undertaken and completed.

H. The state recognizes the authority of FTA, U.S. DOT, and the Comptroller General of the United States to conduct audits and reviews to verify compliance with the foregoing requirements and stipulations, and assures that, upon request, the SIB and its subrecipients, as well as the states, will make the necessary records available to FTA, U.S. DOT and the Comptroller General of the United States. The state also acknowledges its obligation under 49 CFR 18.40(a) to monitor project activities carried out by its subrecipients to assure compliance with applicable Federal requirements.

I. As required by 49 U.S.C. 5311(f), the state will expend not less than fifteen (15) percent of the Federal assistance authorized for 49 U.S.C. 5311(f) and apportioned during this fiscal year to carry out a program to develop and support intercity bus transportation, unless the chief executive officer of the state or his or her duly authorized designee certifies that the intercity bus service needs of the state are being adequately met.

15. Certifications and Assurances for the State Infrastructure Bank Program

An Applicant for a grant of Federal assistance for deposit in the State Infrastructure Bank (SIB) must provide the following certifications and assurances. In providing certifications and assurances on behalf of its prospective subrecipients, the Applicant is expected to obtain sufficient documentation from those subrecipients to assure the validity of its certifications and assurances. FTA may not award Nonurbanized Area Formula Program assistance for the State Infrastructure Bank program to the Applicant until the Applicant provides these certifications and assurances by selecting Categories ''1'' through ''11'' and ''15.''

The state serving as the Applicant for Federal assistance for the Transit Account of its state SIB program authorized by either section 350 of the National Highway System Designation Act of 1995, as amended, 23 U.S.C. 101 note, or the State Infrastructure Bank Pilot Program, 23 U.S.C. 181 note, certifies and assures that the following requirements and conditions will be fulfilled pertaining to any project financed with Federal assistance derived from the Transit Account of the SIB:

A. The state organization serving as the Applicant (state) agrees and assures the agreement of the SIB and each recipient of Federal assistance derived from the Transit Account of the SIB within the state (subrecipient) that each Project financed with Federal assistance derived from the Transit Account will be administered in accordance with the:

(1) Applicable provisions of section 350 of the National Highway System Designation Act of 1995, as amended, 23 U.S.C. 101 note, or of the State Infrastructure Bank Pilot Program, 23 U.S.C. 181 note, and any further amendments thereto;

(2) Provisions of FTA's NHS Guidelines, and any amendments thereto;

(3) Terms and conditions of Department of Labor Certification(s) of Transit Employee Protective Arrangements that are required by Federal law or regulations;

(4) Provisions of FHWA and FTA cooperative agreement with the state to establish the state's SIB program; and

(5) Provisions of the FTA grant agreement with the state that obligating Federal assistance for the SIB, except that any provision of the Federal Transit Administration Master Agreement incorporated by reference into that grant agreement will not apply if it conflicts with any provision of National Highway System Designation Act of 1995, as amended, 23 U.S.C. 101 note, or section 1511 of TEA–21, as amended, 23 U.S.C. 181 note, and FTA SIB Guidelines, the provisions of the cooperative agreement establishing the SIB program within the state, or the text within the FTA grant agreement.

B. The state agrees to comply with and assures the compliance of the SIB and each subrecipient of assistance under the SIB with all applicable requirements for the SIB program, as those requirements may be amended from time to time. Pursuant to the requirements of subsection 1511(h)(2) of TEA–21, 23 U.S.C. 181 note, applicants for assistance authorized by the state Infrastructure Bank Pilot Program agree that previous cooperative agreements entered into with states under section 350 of the National Highway System Designation Act of 1995, as amended, 23 U.S.C. 101 note, will be revised to comply with new requirements.

C. The state assures that the SIB will provide Federal assistance from its Transit Account only for transit capital projects eligible under section 350 of the National Highway System Designation Act of 1995, as amended, 23 U.S.C. 101 note or under section 1511 of TEA–21, 23 U.S.C. 181 note, and that those projects will fulfill all requirements imposed on comparable capital transit projects financed by FTA.

D. The state understands that the total amount of funds to be awarded for a grant agreement will not be immediately available for draw down. Consequently, the state assures that it will limit the amount of Federal assistance it draws down for deposit in the SIB to amounts that do not exceed the limitations specified in the underlying grant agreement or the approved project budget for that grant agreement.

E. The state assures that each subrecipient has or will have the necessary legal, financial, and managerial capability to apply for, receive, and disburse Federal assistance authorized by Federal statute for use in the SIB, and to implement, manage, operate, and maintain the project and project property for which such assistance will support.

F. The state assures that sufficient non-Federal funds have been or will be committed to provide the required local share.

G. The state recognizes that the SIB, rather than the state itself, will be ultimately responsible for implementing many Federal requirements covered by the certifications the state has signed. Having taken appropriate measures to secure the necessary compliance by the SIB, the state assures, on behalf of the SIB, that:

(1) The SIB has complied or will comply with all applicable civil rights requirements;

(2) The SIB has complied or will comply with applicable requirements of U.S. DOT regulations on participation of disadvantaged business enterprise in U.S. DOT programs;

(3) The SIB will provide Federal assistance only to a subrecipient that is either a public or private entity recognized under state law as having the legal capability to contract with the state to carry out its proposed project;

(4) Before the SIB enters into an agreement with a subrecipient under which Federal assistance will be disbursed to the subrecipient, the subrecipient's project is included in the Statewide Transportation Improvement Program; all projects in urbanized areas recommended for approval are included in the annual element of the metropolitan Transportation Improvement Program in which the subrecipient is located; a certification that an opportunity for a public hearing has been provided;

(5) The SIB will not provide Federal financial assistance for any project that does not qualify for a categorical exclusion described in 23 CFR 771.117(c) until the required Federal environmental finding has been made. Moreover, the SIB will provide no financial assistance for a project requiring a conformity finding in accordance with the Environmental Protection Agency's Clean Air Conformity regulations at 40 CFR parts 51 and 93, until the required Federal conformity finding has been made;

(6) Before the SIB provides Federal assistance for a transit project, each subrecipient will have complied with the applicable transit employee protective provisions of 49 U.S.C. 5333(b) as required for that subrecipient and its project; and

(7) The SIB will enter into a written agreement with each subrecipient stating the terms and conditions of assistance by which the project will be undertaken and completed, including specific provisions that any security or debt financing instrument the SIB may issue will contain an express statement that the security or instrument does not constitute a commitment, guarantee, or obligation of the United States.

H. The state recognizes that the subrecipient, rather than the state itself, will be ultimately responsible for implementing many Federal requirements covered by the certifications the state has signed. Having taken appropriate measures to secure the necessary compliance by the SIB and each subrecipient, the state assures, on behalf of each subrecipient, that each subrecipient has:

(1) Complied or will comply with all applicable civil rights requirements;

(2) Complied or will comply with applicable requirements of U.S. DOT regulations on participation of disadvantaged business enterprise in U.S. DOT programs;

(3) Complied or will comply with Federal requirements regarding transportation of elderly persons and persons with disabilities;

(4) Complied or will comply with the applicable transit employee protective provisions of 49 U.S.C. 5333(b) as required for that subrecipient and its project;

(5) Complied or will comply with 49 CFR part 604 in the provision of any charter service provided with equipment or facilities acquired with FTA assistance;

(6) Complied with or will comply with applicable provisions of 49 CFR part 605 pertaining to school transportation operations;

(7) Viewing its demand responsive service to the general public in its entirety, complied or will comply with the requirement to provide demand responsive service to persons with disabilities, including persons who use wheelchairs, meeting the standard of equivalent service set forth in 40 CFR 37.77(c), if it purchases non-accessible vehicles for use in demand responsive service for the general public;

(8) Established or will establish a procurement system and conducted or will conduct its procurements in compliance with all applicable requirements imposed by Federal laws, executive orders, or regulations and the requirements of FTA Circular 4220.1D, ''Third Party Contracting Requirements,'' and other implementing requirements FTA may issue;

(9) Complied or will comply with the requirement that its project provides for the participation of private mass transportation companies to the maximum extent feasible;

(10) Paid or will pay just compensation under state or local law to each private mass transportation company for its franchise or property acquired under the project;

(11) Complied or will comply with all applicable lobbying requirements for each application exceeding $100,000;

(12) Complied or will comply with all nonprocurement suspension and debarment requirements;

(13) Complied with or will comply with all applicable bus testing requirements for new bus models;

(14) Complied with or will comply with all applicable pre-award and post-delivery review requirements;

(15) Complied with or will comply with all assurances FTA requires for projects involving real property; and

(16) Complied with, or to the extent required by FTA will comply with, applicable anti-drug and alcohol program requirements.

I. The state recognizes the authority of FTA, U.S. DOT, and the Comptroller General of the United States to conduct audits and reviews to verify compliance with the foregoing requirements and stipulations, and assures that, upon request, the SIB and its subrecipients, as well as the states, will make the necessary records available to FTA, U.S. DOT and the Comptroller General of the United States. The state also acknowledges its obligation under 49 CFR 18.40(a) to monitor project activities carried out by the SIB and its subrecipients to assure compliance with applicable Federal requirements.

Selection and Signature Pages Follow

Federal FY 2001 Certifications and Assurances for FTA Assistance

(Alternative to Electronic Filing)

Name of Applicant:_____

The Applicant Agrees To Comply With Applicable Requirements of Categories 1–15

____

(The Applicant may make this selection in lieu of individual selections below.)

OR

The Applicant Agrees To Comply With the Applicable Requirements of the Following Categories It Has Selected:

1. Certifications and Assurances Required of Each Applicant ____
2. Lobbying Certification ____
3. Certification Pertaining to Effects on Private Mass Transportation Companies ____
4. Public Hearing Certification for a Project with Substantial Impacts ____
5. Certification for the Purchase of Rolling Stock ____
6. Bus Testing Certification ____
7. Charter Service Agreement ____
8. School Transportation Agreement ____
9. Certification for Demand Responsive

Service ____
10. Substance Abuse Certifications ____
11. Certification Required for Interest and Other Financing Costs ____
12. Certifications and Assurances for the Urbanized Area Formula Program, the Job Access and Reverse Commute Program, and the Clean Fuels Formula Program ____
13. Certifications and Assurances for the Elderly and Persons with Disabilities Program ____
14. Certifications and Assurances for the Nonurbanized Area Formula Program ____
15. Certifications and Assurances for the State Infrastructure Bank (SIB) Program ____

(Both sides of this Signature Page must be appropriately completed and signed where indicated.)

Federal Fiscal Year 2001 FTA Certifications and Assurances

(Required of all Applicants for FTA assistance and all FTA Grantees with an active capital or formula project)

Name of Applicant: _____

Name and Relationship of Authorized Representative: _____

BY SIGNING BELOW I, _____ (name), on behalf of the Applicant, declare that the Applicant has duly authorized me to make these certifications and assurances and bind the Applicant's compliance. Thus, the Applicant agrees to comply with all Federal statutes, regulations, executive orders, and administrative guidance required for each application it makes to the Federal Transit Administration (FTA) in Federal Fiscal Year 2001.

FTA intends that the certifications and assurances the Applicant selects on the other side of this document, as representative of the certifications and assurances in Appendix A, should apply, as required, to each project for which the Applicant seeks now, or may later, seek FTA assistance during Federal Fiscal Year 2001.

The Applicant affirms the truthfulness and accuracy of the certifications and assurances it has made in the statements submitted herein with this document and any other submission made to FTA, and acknowledges that the provisions of the Program Fraud Civil Remedies Act of 1986, 31 U.S.C. 3801 *et seq.*, as implemented by U.S. DOT regulations, ''Program Fraud Civil Remedies,'' 49 CFR part 31 apply to any certification, assurance or submission made to FTA. The criminal fraud provisions of 18 U.S.C. 1001 apply to any certification, assurance, or submission made in connection with the Urbanized Area Formula Program, 49 U.S.C. 5307, and may apply to any other certification, assurance, or submission made in connection with any other program administered by FTA.

In signing this document, I declare under penalties of perjury that the foregoing certifications and assurances, and any other statements made by me on behalf of the Applicant are true and correct.

Signature _____

Name _____

Authorized Representative of Applicant

Date: _____

Affirmation of Applicant's Attorney

for _____ (Name of Applicant)

As the undersigned Attorney for the above named Applicant, I hereby affirm to the Applicant that it has authority under state and local law to make and comply with the certifications and assurances as indicated on the foregoing pages. I further affirm that, in my opinion, the certifications and assurances have been legally made and constitute legal and binding obligations on the Applicant.

I further affirm to the Applicant that, to the best of my knowledge, there is no legislation or litigation pending or imminent that might adversely affect the validity of these certifications and assurances, or of the performance of the project.

Signature _____

Name _____

Applicant's Attorney _____

Date: _____

Each Applicant for FTA financial assistance (except 49 U.S.C. 5312(b) assistance) and each FTA Grantee with an active capital or formula project must provide an Attorney's affirmation of the Applicant's legal capacity. The Applicant may enter its PIN in lieu of the electronic signature of its Attorney, provided the Applicant has on file this Affirmation of its Attorney in writing dated this Federal fiscal year.

[FR Doc. 01–1083 Filed 1–17–01; 8:45 am]

BILLING CODE 4910–57–P

Federal Register

Thursday,
January 18, 2001

Part IV

Department of Agriculture

Food Safety and Inspection Service

9 CFR Parts 317 and 381

Nutrition Labeling of Ground or Chopped Meat and Poultry Products and Single-Ingredient Products; Proposed Rule

DEPARTMENT OF AGRICULTURE

Food Safety and Inspection Service

9 CFR Parts 317 and 381

[Docket No. 98–005P]

RIN 0583–AC60

Nutrition Labeling of Ground or Chopped Meat and Poultry Products and Single-Ingredient Products

AGENCY: Food Safety and Inspection Service, USDA.

ACTION: Proposed rule.

SUMMARY: The Food Safety and Inspection Service (FSIS) is proposing to amend the Federal meat and poultry products inspection regulations to require nutrition labeling of the major cuts of single-ingredient, raw meat and poultry products, unless an exemption applies. For these products, FSIS is proposing to make the guidelines currently in place for the voluntary nutrition labeling program mandatory. Thus, the Agency is proposing to require that nutrition information be provided for these products either on their label or at their point-of-purchase. During the most recent surveys of retail stores, the Agency did not find significant participation in its voluntary nutrition labeling program, which covers the major cuts of single-ingredient, raw products. Without nutrition information for these products, the Agency has tentatively concluded that the major cuts of single-ingredient, raw meat and poultry products would be misbranded under the Federal Meat Inspection Act and the Poultry Products Inspection Act.

FSIS is also proposing to amend its regulations to require nutrition labels on all ground or chopped meat and poultry products, with or without added seasonings, unless an exemption applies. Under existing regulations, multi-ingredient ground or chopped products, (*e.g.,* ground pork with seasonings), and heat processed ground or chopped products (*e.g.,* fully cooked or partially cooked patties) are required to be nutritionally labeled, unless they qualify for an exemption, but single-ingredient, raw ground or chopped products are not required to be so labeled. Without nutrition information for single-ingredient, raw ground or chopped products, the Agency has tentatively concluded that these products would be misbranded under the Federal Meat Inspection Act and the Poultry Products Inspection Act. The Agency has also tentatively determined that single-ingredient, raw ground or chopped meat and poultry products are different from other single-ingredient, raw meat and poultry products in several important respects. Thus, FSIS is proposing to make nutrition labeling requirements for all ground or chopped meat and poultry products consistent with those currently required for products in the mandatory nutrition labeling program (multi-ingredient and heat processed products).

FSIS is proposing to require nutrition labels on packages of single-ingredient, raw ground or chopped products, rather than at their point-of-purchase, largely because these products are similar to products in the mandatory nutrition labeling program (which requires nutrition information to be on the label of individual packages), in that certain parameters, such as their fat content, can be controlled precisely to obtain the desired product. Although FSIS believes that nutrition information on labels of individual packages of single-ingredient, raw products is useful, FSIS is proposing that nutrition information for the major cuts of single-ingredient, raw products may also be provided on point-of-purchase materials because FSIS believes that consumers have reasonable expectations as to the nutrient content of these products, the nutrient content of a specific major cut is relatively uniform across the market, and because these products are not formulated in the manner of ground or chopped products. For single-ingredient, raw products that are not major cuts and that are not ground or chopped, FSIS is not proposing to require nutrition information on their labels or at their point-of-purchase because FSIS has not yet assessed whether adequate nutrition information is being provided for these products and, therefore, has not determined whether it would be beneficial to require nutrition labeling for these products.

Finally, FSIS is proposing to amend the nutrition labeling regulations to provide that when a ground or chopped product does not meet the criteria to be labeled ''low fat,'' a lean percentage claim may be included on the label or in labeling as long as a statement of the fat percentage also is displayed on the label or in labeling.

DATES: Comments must be received on or before April 18, 2001.

ADDRESSES: Submit one original and two copies of comments to FSIS Docket Clerk, Docket #98–005P, Food Safety and Inspection Service, Room 102, Cotton Annex, 300 12th Street, SW, Washington, DC 20250–3700. Reference material cited in the document and any comments received will be available for public inspection in the FSIS Docket Room from 8:30 a.m. to 4:30 p.m., Monday through Friday.

FOR FURTHER INFORMATION CONTACT: Dr. Robert Post, Director, Labeling and Additives Policy Division, Office of Policy, Program Development, and Evaluation, Food Safety and Inspection Service, U.S. Department of Agriculture, Washington, DC 20250–3700; (202) 205–0279.

SUPPLEMENTARY INFORMATION:

Background

The Current Mandatory and Voluntary Nutrition Labeling Programs

Mandatory nutrition labeling program. The Nutrition Labeling and Education Act (NLEA) of 1990 required nutrition labeling of most foods regulated by the Food and Drug Administration (FDA). FSIS published regulations establishing comparable nutrition labeling requirements for meat and poultry products. As explained in its proposed and final rules, FSIS determined that it had statutory authority to require nutrition labeling based on the Secretary of Agriculture's determination that meat and poultry products, other than single-ingredient, raw products, would be misbranded in the absence of such information, under section 1(n) of the Federal Meat Inspection Act (FMIA) (21 U.S.C. 601(n)(1)) and section 4(h)(1) of the Poultry Products Inspection Act (PPIA) (21 U.S.C. 453(h)(1)) (56 FR 60305 and 58 FR 637). These statutory provisions state that a product is misbranded if it is false or misleading in any particular. FSIS published an advance notice of proposed rulemaking on nutrition labeling of meat and poultry products on April 2, 1991 (56 FR 13564), a proposed rule on November 27, 1991 (56 FR 60302), a final rule on January 6, 1993 (58 FR 632), and subsequently other amendments to the rule.

FSIS' regulations require nutrition labels on the packages of all multi-ingredient and heat processed meat and poultry products, unless an exemption applies. The required nutrition labeling provisions are referred to as ''the mandatory nutrition labeling program.'' The regulations include exemptions from nutrition labeling requirements for food products produced by small businesses, products intended for further processing, products not offered for sale to consumers, products in small packages that are individually wrapped packages of less than ½ ounce net weight, custom slaughtered or prepared products, products intended for export, ready-to-eat products that are packaged

or portioned at a retail store or similar retail-type establishment, and multi-ingredient products processed at a retail store or similar retail-type establishment. The regulations also provide that nutrition labeling may be provided by alternate means for packages that have a total surface area available to bear labeling of less than 12 square inches; for these products, the regulations permit manufacturers to provide an address or telephone number on the package for consumers to write or call for nutrition information. Except for the nutrition labeling exemptions for custom slaughtered or prepared products and products intended for export, the exemptions from nutrition labeling requirements and the provision for alternate means of providing nutrition labeling on packages that have a limited surface area to bear labeling apply only when a product's labeling includes no nutrition claims or nutrition information. The regulations also state that restaurant menus generally do not constitute nutrition labeling or fall within the scope of the nutrition labeling regulations, and that foods represented or purported to be specifically for infants and children less than 4 years of age shall not include certain nutrient content declarations (see §§ 317.400 and 381.500).

The regulations specify the information that must be included on the labels of products in the mandatory nutrition labeling program. The required information includes the levels of total calories, calories from fat, total fat, saturated fat, cholesterol, sodium, total carbohydrate, dietary fiber, sugars, protein, and certain vitamins and minerals in the product. In certain situations, information concerning some of these nutrients is not required. For example, the label declaration of ''calories from fat'' is not required on products that contain less than 0.5 gram of fat per serving. The regulations also provide that information concerning stearic acid, polyunsaturated fat, monounsaturated fat, potassium, soluble fiber, insoluble fiber, sugar alcohol, other carbohydrates, and calories from saturated fat may be included voluntarily. When claims related to these nutrients are made, or when certain related nutrients are declared, information concerning these nutrients is required.

The regulations require that the nutrient and food component quantities on the label of products in the mandatory nutrition labeling program be declared in relation to a serving. The regulations also require that the declaration of nutrient and food component content be on the basis of the product ''as packaged''; in addition, the declaration of nutrient and food component content may also be made on the basis of ''as consumed,'' provided that preparation and cooking instructions are clearly stated. The regulations also prescribe format requirements for nutrient information, which include specified headings that must be used in the presentation of nutrition labeling information.

The regulations include provisions for Agency monitoring of compliance with the mandatory nutrition labeling requirements. FSIS conducts a continuous product sampling program to ensure compliance with nutrition labeling requirements (see §§ 317.309(h)(1)–(8) and 381.409(h)(1)–(8)).

Voluntary nutrition labeling program. In the preamble to the January 6, 1993, final rule, FSIS stated that it would not require nutrition labeling for single-ingredient, raw meat and poultry products because the nutrient values of these products are not modified through various stages of preparation, such as cooking and heat processing. Therefore, the Agency believed that consumers had reasonable expectations as to the nutritional qualities of these products (58 FR 637). In the preamble to the proposed rule, FSIS also stated that nutrition information for single-ingredient, raw products was available to consumers through other means such as the extension service, grocery stores, and trade associations (56 FR 60306). For these reasons, although the Agency adopted a mandatory nutrition labeling program for multi-ingredient products and heat processed products, it chose not to do so for single-ingredient, raw meat and poultry products, including single-ingredient, raw ground or chopped products. Instead, it established guidelines for voluntary nutrition labeling of these products (see §§ 317.345 and 381.445).

Under the voluntary nutrition labeling program, retailers and manufacturers are not required to provide nutrition information for single-ingredient, raw meat or poultry products. Instead, retailers and manufacturers voluntarily may provide nutrition information on the label of these products, or at their point-of-purchase by posting a sign or by making the information readily available in brochures, notebooks, or leaflet form in close proximity to the food. However, if a nutrition claim is made on these materials, all of the requirements of the mandatory nutrition labeling program apply.

If only nutrition information, and not a nutrition claim, is supplied on the point-of-purchase materials of single-ingredient, raw products, the requirements of the mandatory program apply, but the nutrition information may be supplied on an ''as packaged'' or ''as consumed basis''; the listing of percent of Daily Value for certain nutrients and the footnote explaining that the Daily Values are based on a 2,000 calorie diet and that daily values may differ depending on calorie needs (see §§ 317.309(d)(9) and 381.409 (d)(9)) may be omitted; and the point-of-purchase materials are not subject to any format requirements.

If, however, a retailer or manufacturer provides nutrition information on the label of single-ingredient, raw products, this information must be presented in the same format as that prescribed for mandatory nutrition labeling of various products. However, for these products, unlike products in the mandatory nutrition labeling program, the nutrition information may be declared on the basis of either ''as consumed'' or ''as packaged.'' If the information is presented on the basis of ''as consumed,'' the regulations provide that the methods used to cook the product must be specified and should be those which do not add nutrients from other ingredients (see §§ 317.345(d) and 381.445(d)). Also, unlike products in the mandatory program, the declaration of the number of servings per container need not be included on the nutrition label.

The regulations provide that the Agency will not conduct compliance sampling and testing of a product subject to the voluntary nutrition labeling program that contains nutrition labeling if the nutrition labeling is based upon the most current representative data base values contained in USDA's National Nutrient Data Bank or in its published form, the Agriculture Handbook No. 8 series, and if there are no nutrition claims made on the basis of the representative database values on the labeling of these products (§§ 317.309(h)(9), 317.345(e), 317.345(f), 381.409(h)(9), 381.445(e), and 381.445(f)).

The Agriculture Handbook No. 8 series is now out of print. The current released form of the USDA's National Nutrient Data Bank is the USDA Nutrient Database for Standard Reference. USDA's Nutrient Data Bank is the Agricultural Research Service's internal system that stores information and has features necessary to produce the released database. The USDA Nutrient Database for Standard Reference is developed and maintained by the Agricultural Research Service and can be found on the internet at the

following address: http://www.nal.usda.gov/fnic/foodcomp.

The Agency may conduct sampling and testing for compliance with nutrition labeling requirements for single-ingredient, raw meat and poultry products if the nutrition information on their labeling is not based on the latest values contained in USDA's National Nutrient Data Bank or the USDA Nutrient Database for Standard Reference, or if there are nutrition claims made on the basis of the representative database values, on the labeling of these products.

Compliance with voluntary nutrition labeling guidelines. FSIS' regulations provide that the Agency monitor compliance with its voluntary nutrition labeling program guidelines by evaluating the participation of retailers in the voluntary program every two years, beginning in May 1995, to determine whether significant participation of at least 60 percent of all companies evaluated exists (§§ 317.343 and 381.443). FSIS stated that it would issue its first report of its survey findings on the voluntary program by May 1995, and that it would reevaluate every two years after 1995 whether significant participation existed in the voluntary nutrition labeling program (56 FR 60306).

FSIS regulations provide that a food retailer is participating at a significant level (1) if the retailer provides nutrition labeling information for at least 90 percent of the major cuts of single-ingredient, raw meat and poultry products it sells; and (2) if the nutrition label on these products is consistent in content and format with the mandatory program, or if nutrition information is displayed at point-of-purchase in an appropriate manner. The regulations provide that significant participation by food retailers exists if at least 60 percent of all companies that are evaluated are participating in accordance with the guidelines. The regulations provide that the voluntary nutrition labeling program will remain in effect as long as there is significant participation in the voluntary program by retail stores (§§ 317.343 and 381.443).

FSIS contracted with an independent market research contracting firm to conduct the retail surveys in 1995, 1996, and 1999. For each of these surveys, the firm surveyed a nationally representative sample of approximately 2,000 retail stores to obtain the information necessary to assess compliance with the guidelines for voluntary nutrition labeling of single-ingredient, raw meat and poultry products.

The first survey to determine participation by retail stores in the voluntary nutrition labeling program was conducted in June 1995. At that time, the National Retail Tracking Index, Inc., found that 66.5 percent of the stores surveyed were providing nutrition information on 90 percent of the major cuts of single-ingredient, raw meat and poultry products. Therefore, this survey showed that significant participation in the voluntary nutrition labeling program existed. FSIS published a notice of availability of the survey results in the January 29, 1996 **Federal Register** (61 FR 2790). In this survey, stores were counted as participating in the voluntary nutrition labeling program if they used point-of-purchase materials developed by the Food Marketing Institute (FMI) prior to the 1993 final rule on nutrition labeling of meat and poultry products. These materials did not comply entirely with the voluntary nutrition labeling program provisions in the 1993 final rule. For example, the older materials did not include the required percent daily values for certain nutrients. Therefore, the results of this survey may overestimate participation in the voluntary nutrition labeling program.

The second survey was conducted in mid-December 1996. FSIS conducted it jointly with FDA. For this survey, the two agencies contracted with the firm that conducted the 1995 FSIS survey, now named Retail Diagnostics, Incorporated (RDI). At this time, RDI found that 57.7 percent of stores surveyed provided nutrition information for 90 percent of the major cuts of single-ingredient, raw meat and poultry products, in accordance with program guidelines. The third survey was conducted in October 1999. At this time, RDI found that 54.8 percent of stores surveyed provided nutrition information for 90 percent of the major cuts of single-ingredient, raw meat and poultry products, in accordance with program guidelines. Therefore, the two most recent surveys did not show significant participation in the voluntary nutrition labeling program, according to the voluntary nutrition labeling program regulations. Reports on the 1996 and 1999 surveys are available electronically on the FSIS web page at http://www.fsis.usda.gov.

Nutrient Content Claims

In addition to establishing the mandatory and voluntary nutrition labeling programs, the January 6, 1993, final rule provided definitions at §§ 317.362 and 381.462 for specific nutrient content claims, including the terms ''lean'' and ''extra lean.'' The definitions of ''lean'' and ''extra lean'' provide that these terms may be used on the label or in labeling only if the product meets certain criteria (see §§ 317.362(e)(1) and (2) and 381.462(e)(1) and (2)). Meat products may be labeled ''lean'' if they contain less than 10 grams of fat, 4.5 grams or less of saturated fat, and less than 95 milligrams of cholesterol per 100 grams of product and per reference amount customarily consumed for individual foods. Meat products may be labeled ''extra lean'' if they contain less than 5 grams of fat, less than 2 grams of saturated fat, and less than 95 milligrams of cholesterol per 100 grams of product and per reference amount customarily consumed for individual foods. Ground beef and hamburger seldom meet the criteria that would allow producers to use the terms ''lean'' or ''extra lean'' on the label or in labeling of these products.

The existing nutrition labeling regulations also provide that the term ''____ percent lean'' is a synonym for the term ''____ percent fat free,'' and that, in order for either term to be used on the label or in labeling of the product, the product must meet the criteria for ''low fat'' (§§ 317.362(b)(6) and 381.462(b)(6)). To meet the criteria for ''low fat,'' a product must have a reference amount customarily consumed greater than 30 grams or greater than 2 tablespoons and must contain 3 grams of fat or less per reference amount customarily consumed for individual foods, or must have a reference amount customarily consumed of 30 grams or less or 2 tablespoons or less and must contain 3 grams or less of fat per reference amount customarily consumed and per 50 grams (§§ 317.362(b)(2) and 381.462(b)(2)). Most ground beef and hamburger do not qualify as ''low fat.'' Therefore, existing regulations preclude the use of the term ''____ percent lean'' on these products.

On May 24, 1994 (59 FR 26916), FSIS published a proposed rule entitled ''Nutrition Labeling of Ground Beef and Hamburger.'' In the preamble to the proposal, FSIS explained that the Agency had determined that, although the existing regulations precluded producers of ground beef and hamburger from using the terms ''lean,'' ''extra lean,'' and ''____ percent lean,'' these products should be labeled to permit consumers to readily identify and differentiate between the varying lean to fat ratios in such products. The Agency also stated that allowing such labeling would assist consumers in selecting leaner versions of these products and would provide an incentive for manufacturers to market products lower in fat. Finally, FSIS

recognized that many producers had been using lean percentages on the labeling of ground beef and hamburger products for a significant period of time (59 FR 26917).

Accordingly, FSIS proposed to amend its regulations to permit the use of percentage labeling for lean and fat on ground beef and hamburger products. Under this proposal, FSIS would have permitted a statement of the lean percentage on the labeling of ground beef and hamburger if it were contiguous to a statement of the fat percentage. The Agency would have allowed this labeling even when the ground beef or hamburger did not qualify as ''low fat.'' The Agency proposed to allow the use of the statement of lean and fat percentages only if the product were accompanied by nutrition information presented on the label, or in point-of-purchase materials in close proximity to the product. FSIS stated that it would consider expanding the proposed percentage labeling to ground meat from other species and to ground poultry if information submitted during the comment period demonstrated the need and consumer acceptability of these terms for such products or that differential treatment of ground beef relative to other ground products would inappropriately restrict informed consumer choice (59 FR 26918).

The Agency received a total of 2,732 comments on this proposal. Fifty-five percent (1,504) of the commenters supported the proposal, 39 percent (1,063) opposed it, and 6 percent (165) addressed issues outside the scope of the proposed rule. Supporters of the proposal included trade associations representing food manufacturers and retailers, food manufacturers of both meat and poultry products, a large number of retailers, and State departments of agriculture. Supporters stated that percentage labeling provides useful information to consumers, that ''lean labeling'' aids consumers in selecting lower fat products, and that percentage labeling has been in use for more than 20 years. Opponents included consumer interest groups, health professionals and organizations, and consumers. They stated that the use of percent lean labeling is inherently misleading to consumers and will cause consumers to view ground beef as ''lean'' or ''low fat.''

Twenty-one of the 1,504 commenters who supported the provisions wanted them to also apply to other species or products. These commenters stated that allowing percentage labeling for lean and fat for other ground meat and poultry products, besides ground beef and hamburger, would allow consumers to compare the fat content of beef or poultry items and to make informed dietary choices.

On August 5, 1994, FSIS published a notice of extension of the date that it would enforce compliance with the nutrition labeling requirements for ground beef and hamburger (59 FR 39941). The Agency extended the compliance enforcement date for these products indefinitely, pending publication of a final rule on percentage labeling for lean and fat on ground beef and hamburger. The Agency has not published a final rule concerning percentage labeling of ground beef and hamburger. Therefore, producers and retailers continue to use the term ''lean'' in percentage labeling on the packages of ground beef and hamburger.

Other Nutrition Activities

In addition to developing this proposed nutrition labeling rule, USDA conducts numerous other activities related to nutrition. This proposed rule on nutrition labeling is an integral part of USDA's efforts to educate consumers concerning nutrition and diets. Since 1980 USDA and the Department of Health and Human Services (HHS) have jointly published the Dietary Guidelines for Americans every five years. The Dietary Guidelines provide advice concerning food choices that promote health and prevent disease. USDA and HHS released the Dietary Guidelines for Americans, 2000, at the National Nutrition Summit on May 30, 2000, which was jointly sponsored by USDA and HHS. The Dietary Guidelines for Americans, 2000, advises consumers to aim for a total fat intake of no more than 30 percent of calories (page 30). In addition, the Dietary Guidelines for Americans, 2000, includes a chart showing the recommended upper limits for grams of saturated fat and total fat per day for a range of total calories per day (page 30). The nutrition information that FSIS is proposing to require on labels of ground or chopped products and on either labels or point-of-purchase materials for the major cuts of single-ingredient, raw products would include the number of calories and the grams of total fat and saturated fat the product contains. The information FSIS is proposing to require would, therefore, assist consumers in following the advice in the Dietary Guidelines for Americans, 2000.

Proposed Changes

Nutrition labeling of the major cuts of single-ingredient, raw products. The Agency is proposing to require nutrition labeling of the major cuts of single-ingredient, raw meat and poultry products, except for certain exemptions. For these products, FSIS is proposing to make the guidelines currently in place for the voluntary nutrition labeling program mandatory. Thus, for all of these products, other than raw ground beef and ground pork which are currently classified as major cuts, FSIS is proposing that nutrition information be provided on the label of these products or at their point-of-purchase. As discussed below, at this time, FSIS is not proposing to require nutrition information for single-ingredient, raw meat and poultry products that are not major cuts and that are not ground or chopped products.

In the preamble to the final rule on nutrition labeling of meat and poultry products, under the discussion of its voluntary nutrition labeling program which covered all single-ingredient, raw meat and poultry products, FSIS stated that it believed that it was important to provide nutrition information to consumers (58 FR 640). FSIS also stated that it believed that by allowing for the use of point-of-purchase materials for single-ingredient, raw meat and poultry products, retailers would be able to provide consumers with the necessary nutrition information (58 FR 640). FSIS continues to believe that nutrition information for these products is important and necessary.

In the two most recent surveys, FSIS found that significant participation in the voluntary nutrition labeling program does not exist. FSIS found that less than 60 percent of the stores surveyed provided nutrition information for 90 percent of the major cuts of single-ingredient, raw meat and poultry products. In its proposed and final rules on nutrition labeling of meat and poultry products, FSIS stated that if it determined, during any evaluation of its voluntary guidelines, that significant participation did not exist, it would initiate proposed rulemaking to determine whether it would be beneficial to require nutrition labeling on single-ingredient, raw meat and poultry products (56 FR 60306, 58 FR 640).

Because the most recent surveys showed that significant participation in the voluntary nutrition labeling program does not exist, FSIS now believes that this proposed rule is necessary and that it would be beneficial to require the labeling of the major cuts of single-ingredient, raw meat and poultry products to bear nutrition information. FSIS believes that without nutrition information, consumers are not able to assess the nutrient content of the major cuts and thus cannot make educated

choices about these products based on nutrition information. FSIS believes that the lack of this information on the labeling of the major cuts causes the labeling to be misleading. The FMIA and PPIA provide that product is misbranded if its labeling is false or misleading in any particular (21 U.S.C. 601(n)(1) and 453(h)(1)). Therefore, without the nutrition information for the major cuts of single-ingredient, raw products that would be provided if significant participation in the voluntary program existed, the Agency has tentatively concluded that these products would be misbranded under section 1(n) of the FMIA or section 4(h) of the PPIA. FSIS requests comments on whether consumers are currently able to assess the nutrient content of the major cuts and whether consumers are currently able to make educated choices about these products based on nutrition information.

If the guidelines currently in place for the voluntary nutrition labeling program are made mandatory, it would ensure that consumers are provided with necessary nutrition information concerning the major cuts. Therefore, the Agency is proposing to make mandatory for the major cuts of single-ingredient, raw meat and poultry products the current provisions for the voluntary nutrition labeling program for presentation of nutrition information on point-of-purchase materials.

FSIS intends to make point-of-purchase materials available over the Internet free of charge. The point-of-purchase materials reflecting the final nutrition labeling regulations that FMI developed show nutrition information in charts with columns covering multiple products. FSIS requests comments on whether the Agency should develop point-of-purchase materials that present nutrition information as a compilation of individual nutrition facts panels for each product or whether the nutrition information on the materials should be presented in charts with horizontal or vertical columns to cover multiple products.

Also, consistent with the existing provisions in the voluntary nutrition labeling program, the Agency is proposing to require that if nutrition information is provided on the label of individual packages of major cuts of single-ingredient, raw products, the current requirements of the mandatory nutrition labeling program will apply, but the nutrition information on the label may be declared either on the basis of ''as consumed'' or ''as packaged.''

FSIS is proposing to allow nutrition information on the label to be declared on the basis of ''as consumed'' without also requiring that the information on the label be declared on the basis of ''as packaged'' for the major cuts of single-ingredient, raw products because, as discussed below, most of these products will not need FSIS compliance scrutiny. Also as noted below, nutrition information for products under the existing mandatory nutrition labeling program must be provided on an ''as packaged'' basis for compliance purposes. Consistent with the existing voluntary nutrition labeling program, FSIS is proposing that the declaration of the number of servings per container need not be included on the nutrition label for the major cuts of single-ingredient, raw products. FSIS is not proposing to require that the number of servings per container be declared for the major cuts of single-ingredient, raw products because all of these products are random weight products, and the number of servings is not currently required on random weight products (see §§ 317.309(b)(10)(iii) and 381.409(b)(10)(iii)).

Although FSIS believes that nutrition information on labels of individual packages of single-ingredient, raw products is useful, FSIS is proposing that the nutrition information for the major cuts of single-ingredient, raw products may also be provided on point-of-purchase materials because, as stated in the 1993 rule, consumers have reasonable expectations as to the nutrient content of these products. Also, the nutrient content of a given major cut is relatively uniform across the market, and these products are not formulated in the manner of ground or chopped products. Therefore, FSIS believes it would be relatively easy to prepare point-of-purchase materials for the major cuts and relatively easy for consumers to find the nutrition information for a particular major cut on point-of-purchase materials. Although FSIS continues to believe that consumers have reasonable expectations as to the nutrient content of these products, FSIS also continues to believe that it is important to provide nutrition information to consumers, either through labels on packages or point-of-purchase materials. FSIS requests comment on whether consumers have reasonable expectations concerning the nutrient content of the major cuts of single-ingredient, raw products and on whether point-of-purchase materials are appropriate vehicles for conveying nutrition information for these products. FSIS specifically requests comment on whether it should require that nutrition labeling should be provided for these products on their label and, if so, on what basis it would require such labeling.

FSIS regulations provide that in evaluating whether there is significant participation in the voluntary nutrition labeling program, FSIS will consider only the major cuts of single-ingredient, raw meat and poultry products (§§ 317.343(a) and 381.443(a)). Consistent with the regulations, FSIS' voluntary nutrition labeling surveys only assessed whether nutrition labeling was provided for the major cuts of single-ingredient, raw meat and poultry products.

Examples of single-ingredient, raw products that are not major cuts (and that are not ground or chopped) include pork jowls, pigs feet, pork leg, pork shoulder picnic, and beef round rump. For single-ingredient, raw products that are not ground or chopped and are not major cuts, FSIS is not proposing that nutrition information must be provided. However, FSIS is proposing that if nutrition information is provided, it must be provided according to the existing guidelines for the current voluntary nutrition labeling program. Therefore, if nutrition information is provided for these products, it would be consistent with nutrition information for the major cuts of single-ingredient, raw products.

As the next step in the process of evaluating the need for nutrition labeling of meat and poultry products, FSIS will examine the current state of nutrition labeling for single-ingredient, raw products that are not ground or chopped and that are not major cuts. FSIS will assess whether adequate nutrition information is being provided for these products. Until this assessment is made, FSIS cannot determine whether it would be beneficial to require nutrition labeling for single-ingredient, raw products that are not ground or chopped and are not major cuts. Whether the labeling of these products should be required to bear nutrition information would depend on whether adequate nutrition information is being provided for them and, if it is not being provided, what the effect is of its not being available. If FSIS determines that adequate nutrition information is not being provided for these products, FSIS will consider whether to propose to require nutrition labeling for these products.

FSIS is proposing to revise the nutrition labeling regulations to clarify which provisions apply to nutrition labels on single-ingredient, raw products that are not ground or chopped, including the major cuts, and which provisions apply to point-of-

purchase materials for these products. FSIS is proposing to revise the regulations so that the provisions for nutrition labels for these products are in §§ 317.309 and 381.409, and the provisions for point-of-purchase materials for these products are in §§ 317.345 and 381.445.

Nutrition labeling of ground or chopped products. The Agency is proposing to add new provisions at §§ 317.301 and 381.401, in the Federal meat and poultry product inspection regulations. In proposed § 317.301, FSIS is proposing to require that nutrition labels be provided for all ground or chopped (livestock species) and hamburger, with or without added seasonings, unless an exemption applies. In proposed § 381.401, FSIS is proposing to require that nutrition labels be provided for all ground or chopped (kind), with or without added seasonings, unless an exemption applies. Products that will have to bear nutrition labeling if this proposal is finalized include single-ingredient, raw hamburger, ground beef, ground beef patties, ground chicken, ground turkey, ground chicken patties, ground pork, and ground lamb. In this discussion, these products will be referred to as ground or chopped products. Ground or chopped products that are multi-ingredient products or heat processed products are already required to bear nutrition labeling, unless they qualify for an exemption. This proposed provision would extend the current mandatory nutrition labeling requirements to single-ingredient, raw ground or chopped products. The proposed provisions do not address sausages or other comminuted products. These products are typically multi-ingredient or heat processed products that are already required to bear nutrition information.

As discussed under the ''Background'' heading above, the existing regulations include exemptions from nutrition labeling requirements, such as an exemption for products produced by small businesses, custom slaughtered or prepared products, and certain products that are packaged, portioned or processed at retail. As discussed below under the ''Exemptions'' heading, most of these exemptions would apply to ground or chopped products that qualify for the exemptions. However, FSIS is proposing that the current exemptions from nutrition labeling for ready-to-eat products packaged or portioned at retail stores and similar retail-type establishments and for multi-ingredient products processed at retail stores and similar retail-type establishments not apply to ground or chopped meat and ground or chopped poultry products, unless the retail store or similar retail-type establishment meets the requirements of the small business exemption. This issue is discussed further under the ''Exemptions'' heading below.

The terms ''ground'' and ''chopped'' are synonymous (see § 319.15). FSIS is proposing to use both terms because both are used in FSIS regulations and by industry. In the discussion below, any statements made regarding the nutrient values or the production of ''ground'' products would also apply to ''chopped'' products.

On June 3, 1997, the Center for Science in the Public Interest (CSPI) submitted a petition to FSIS stating that FSIS should require complete ''Nutrition Facts'' on ground beef labels that make nutrient content claims; should prohibit ''% lean'' claims on ground beef; should require ground beef to meet the same definitions of ''lean'' and ''extra lean'' that apply to other foods; and should require ground beef labels to replace ''% lean'' and ''% fat'' claims with the same ''% less fat'' claims used by other foods. CSPI also submitted information illustrating the variations in ground beef labels that include information on the lean or fat percentages of the product.

Consistent with CSPI's petition, the Agency has tentatively determined that nutrition information should be required on packages of all ground or chopped meat and poultry products, unless an exemption applies. FSIS is proposing to require this information even if there are no nutrient content claims on the label.

With regard to the statements in CSPI's petition concerning the use of ''% lean,'' ''lean,'' ''extra lean,'' and ''% less fat'' claims on ground beef labeling, FSIS is not revising the regulations as the petitioner requested. As discussed below, FSIS is proposing to permit a statement of lean percentage on the label or in labeling of all ground or chopped meat and ground or chopped poultry products that do not meet the regulatory definition for ''low fat'' as long as a statement of the fat percentage is also provided, because consumers have become accustomed to this information, and because FSIS believes that this information provides a quick, simple, accurate means of comparing these products.

Unlike other single-ingredient, raw products, producers are able to formulate precisely the fat content of ground or chopped products. Therefore, in this respect, these products are similar to products in the existing mandatory program. The fat content of ground beef products can be formulated to range from under 6 percent to 30 percent. Below is a table that compares the nutrient values of three ground beef products that contain different levels of fat. All values are based on raw product.

Nutrient values per 100 g	Ground beef 17% fat	Ground beef 21% fat	Ground beef 27% fat
Calories	234	264	310.
Cholesterol	69 mg	75 mg	85 mg.
Fatty acids, saturated	6.8 g	8.3 g	10.8 g.

Source: USDA Nutrient Database for Standard Reference (1985 data)

FSIS believes that consumers cannot easily see the fat in ground or chopped beef. In ground or chopped beef products, the fat is uniformly distributed throughout the product and is not clearly distinguishable on the surface of the product. Therefore, consumers cannot estimate the level of fat in these products and cannot compare the levels of fat in these products to those in other products.

Fat is not the only factor that contributes to the nutrient variability of ground beef products. Producers sometimes use beef from advanced meat recovery (AMR) systems and low temperature rendering in ground or chopped beef products, which affect the nutrient variability of ground beef products. Product derived from low temperature rendering of beef tissue that is not fatty tissue, such as fat reduced beef or finely textured beef, is considered beef and can be used in ground or chopped beef or hamburger and other ground or chopped meat products. The regulations currently do not address the use of fat reduced beef or finely textured beef. FSIS may address the use of such products derived from low temperature rendering in a future rulemaking.

An American Meat Institute (AMI) survey found that the use of product derived from AMR systems in ground beef was becoming more prevalent, although AMI did not obtain specific information concerning the volume of product from AMR systems (The American Meat Institute Foundation, *Relative Ground Beef Contribution to the United States Beef Supply* (May 1996): 10). This survey also found that producers use product such as finely textured beef recovered via technology (a product derived from low temperature rendering) in ground beef products to achieve specific lean contents (The American Meat Institute Foundation, *Relative Ground Beef Contribution to the United States Beef Supply* (May 1996): 11). It should be noted that beef from AMR systems is not used at retail, unless the retail establishment is grinding beef product produced at a Federal establishment. Ground beef produced at retail from a single cut of meat, such as ground chuck or ground round, would not typically include beef from AMR systems. However, ground beef produced at retail from trimmings produced at a Federal establishment could include beef from AMR systems.

Typically, meat from AMR systems does not comprise more than 10 percent of ground meat products, including ground beef (R.A. Field, ''Bone Marrow Measurements for Mechanically Recovered Products from Machines that Press Bones,'' *Meat Science* 51 (1999): 206). Similarly, meat from low temperature rendering usually does not comprise more than 10 percent of ground products, including ground beef. However, because beef from AMR systems or low temperature rendering generally has higher levels of cholesterol, iron, and calcium than other beef, the use of these types of beef in ground beef products can affect the nutrient content of these products. The table below shows the percentage fat and the levels of iron and calcium per 100 grams of product for regular ground beef, for beef from AMR systems, and for product made from 90 percent regular ground beef and 10 percent beef from AMR systems. For regular ground beef and for beef from AMR systems, the table shows values from different studies (R.A. Field, ''Bone Marrow Measurements for Mechanically Recovered Products from Machines that Press Bones,'' *Meat Science* 51 (1999): 206, 209). FSIS calculated the nutrient values for product comprised of 90 percent ground beef and 10 percent AMR product based on the values from the studies. FSIS calculated values for product made from 90 percent ground beef and 10 percent AMR product because, as stated above, typically meat from AMR systems does not comprise more than 10 percent of ground meat products. All values shown below are based on raw product.

Nutrient values per 100 grams	Regular ground beef (Anderson et al., 1986)	Beef from AMR (Hasiak and Marks, 1997)	Beef from AMR product (Leising, 1997)	Ground beef, 10% AMR product (Hasiak and Marks)	Ground beef, 10% AMR product (Leising)
Cholesterol	85 mg	115 mg	102 mg	88 mg	86.7 mg
Iron	1.7 mg	2.8 mg	5.6 mg	1.81 mg	2.09 mg
Calcium	8 mg	108 mg	115 mg	18.0 mg	18.7 mg

Even if producers do not use beef from AMR systems or beef derived from low temperature rendering, they are able to precisely control the amount of fat in the beef that is ground or chopped to create packages of ground or chopped beef. A study concerning testing for the fat content of ground beef found that, using two testing methods, ground beef formulated for a certain fat percentage varied by only 2 percentage points around the average fat percentage. Although this study found some problems concerning blending of ground beef and testing for the fat content in ground beef, its results show that the product can be and is precisely formulated and within the control of the producer (Robert Campbell, ''Ground Beef Testing: Determining Fat Content and Distribution,'' *Meat and Poultry* (October, 1997): 67–69). Many ground beef producers have quality control programs to control the fat content of their product. These producers conduct regular sampling and testing for fat in ground beef products. Thus, producers are able to formulate these products to control the amount of fat in them more precisely than the fat can be controlled in other cuts. Other single-ingredient, raw products cannot be formulated in this manner or to this degree.

Although ground beef comprises the majority of ground meat products sold at retail, products such as ground lamb and ground pork are also available. Similar to ground beef products, these products may contain varying amounts of fat and varying nutrient content, which consumers cannot visually detect. In addition, ground pork may include product from AMR systems or from low temperature rendering, which may affect the nutrient content of these products. Therefore, FSIS is proposing to require nutrition labeling on these products and other ground or chopped meat products. As noted above, meat from AMR systems or low temperature rendering typically does not comprise more than 10 percent of ground meat products, including ground pork. Product from AMR systems or low temperature rendering is generally not used in ground or chopped lamb. Because products such as ground pork and ground lamb may contain varying amounts of fat and nutrient content, which consumers cannot visually detect, and because ground pork may include product from AMR systems or low temperature rendering, FSIS is proposing to require nutrition labeling on all ground or chopped meat products.

The fat-to-lean content of ground poultry products does not vary as greatly as that of ground beef products; however, the fat content of ground poultry can vary depending upon whether the product is ground light or dark meat, and whether the product includes poultry skin. As with the fat on ground meat products, consumers cannot readily detect the fat content of ground poultry products. The table below shows values for light and dark turkey meat, with skin and without skin. All values are based on raw product. The nutrient content of ground turkey would vary depending on which types of meat were used to produce the product.

Nutrient values per 100 grams	Turkey, dark meat and skin	Turkey, dark meat only	Turkey, light meat and skin	Turkey, light Meat only
Calories	172	130	165	116

Nutrient values per 100 grams	Turkey, dark meat and skin	Turkey, dark meat only	Turkey, light meat and skin	Turkey, light Meat only
Cholesterol	65 mg	62 mg	62 mg	58 mg
Fatty acids, saturated	2.99 g	1.64 g	2.19 g	.53 g

Source: USDA Nutrient Database for Standard Reference (1985 data)

Because the characteristics of ground or chopped poultry are similar to those of ground or chopped meat, FSIS is also proposing to require nutrition labeling on ground or chopped poultry products. The Agency is also proposing comparable requirements for ground or chopped meat and poultry products because it is committed to equitable treatment of meat and poultry products. FSIS has consistently taken the position that similar products should be regulated in a similar manner to facilitate consumers' ability to make comparisons among these products.

For the reasons discussed above, the Agency has tentatively concluded that ground or chopped meat and poultry products that do not bear nutrition information would be misbranded under section 1(n)(1) of the FMIA and section 4(h)(1) of the PPIA. As noted above, in the January 6, 1993 final rule, the Agency did not require nutrition labeling on packages of single-ingredient, raw meat and poultry products because FSIS believed that consumers had reasonable expectations as to the nutritional qualities of such products since they are not modified through various stages of preparation, such as cooking and heat processing (58 FR 637). FSIS now believes that the variation in the fat and nutrient content of different ground or chopped products, the formulated nature of these products, and the fact that the fat content of these products cannot be readily visually assessed makes it difficult for consumers to have a reasonable expectation as to the nutritional quality of these products. Further consideration of the issues raised in the petition from CSPI brought many of these issues to FSIS' attention. If this proposal is adopted, the existing mandatory nutrition labeling provisions in §§ 317.309 and 381.409 would apply to these products, unless they are subject to an exemption.

Although current labeling on ground beef products often includes information concerning the percentage of fat in the product, as noted in the CSPI petition, without complete nutrition labeling, consumers cannot easily determine the amount of fat per serving of ground beef. Also, without complete nutrition labeling, consumers cannot assess how much saturated fat, cholesterol, protein, or calories the product contains. Furthermore, consumers cannot easily compare fat percentages on the labeling of ground beef products with the information concerning grams of fat per serving or with the information concerning the percent daily values that is found on the labeling of products that are currently covered by the mandatory nutrition labeling program.

The Agency tentatively concludes that information concerning the nutritional qualities of ground or chopped meat and poultry products is particularly important because these products, especially ground beef, are widely consumed. Pertinent nutrition information is integral to consumer purchase decisions because use of this information may result in prevention of health problems and reduction of health risks for some consumers. Additional information about the nutrient values of ground or chopped meat and poultry products would enable consumers to make informed decisions about including these products in their diets and, therefore, will help consumers to construct healthy diets.

FSIS is proposing to require that nutrition information for ground or chopped meat and poultry products appear on the label of these products (unless an exemption applies), as is required for other products in the current mandatory nutrition labeling program, rather than on point-of-purchase materials. Ground or chopped products are similar to products in the mandatory nutrition labeling program, which requires nutrition information to be on the label of products, in that certain parameters, such as their fat content, can be controlled precisely to obtain the desired product. In addition, because there are numerous formulations of ground or chopped products, it would be difficult for producers or retailers to develop point-of-purchase materials that would address all the different formulations that exist for these products. Furthermore, it would be difficult for consumers to find the correct information for a specific ground or chopped product on point-of-purchase materials that include information concerning numerous formulations of these products. For these reasons, FSIS tentatively concludes that nutrition information should be required on the label of these products, consistent with the requirements in the existing mandatory nutrition labeling program. FSIS requests comments concerning whether nutrition information should be required on individual packages of ground or chopped product or whether the information should be allowed at their point-of-purchase.

In addition, consistent with requirements for products that fall under the existing mandatory nutrition labeling program, FSIS is proposing that the declaration of nutrient and food component content for ground or chopped products be required on an ''as packaged'' basis. The preamble to the final rule explained why products in the mandatory nutrition labeling program would be required to be labeled on an ''as packaged'' basis: ''There are varieties of cooking methods that affect the nutrient values of food products differently. Therefore, there is no method to assure the accuracy or measure compliance of the nutrient values of food labeled on an 'as consumed' basis.'' (58 FR 648). These reasons for requiring nutrition information on an ''as packaged'' basis for products in the current mandatory nutrition labeling program also are the basis for requiring that ground or chopped products be required to be labeled on an ''as packaged'' basis. Whether or not the fat is drained off during the cooking of ground or chopped products would affect the nutrient values of ground or chopped products. As discussed below, ground or chopped products will be subject to FSIS compliance. Therefore, FSIS tentatively concludes that it is necessary to require that nutrition information be presented on an ''as packaged'' basis for ground or chopped products in order to assure the accuracy of nutrient values and to measure compliance of the nutrient values of these products. FSIS requests comment on whether it would be difficult for producers to comply with this requirement.

However, consistent with the provisions of the existing mandatory program, FSIS is proposing that nutrition information for ground or chopped products may be presented on an ''as consumed'' basis, in addition to the required ''as packaged'' basis, provided that preparation and cooking instructions are clearly stated. FSIS is proposing to allow nutrition

information on as ''as consumed'' basis, in addition to the required ''as packaged basis,'' because FSIS believes this is useful information for consumers.

FSIS requests comments on whether all Federal establishments and retail stores are able to control the fat and nutrient content of ground or chopped meat and poultry products. FSIS also requests comment on the practices of retail stores that grind or chop meat and poultry. FSIS is interested in whether retail stores that grind or chop product mix trimmings from one Federal establishment with trimmings from other Federal establishments. In addition, FSIS is interested in data on the extent to which product from AMR systems or product from low temperature rendering is used in ground or chopped products.

FSIS requests comments concerning whether consumers have reasonable expectations as to the nutritional quality of ground or chopped product, whether consumers know which ground or chopped products are lowest in fat, whether consumers understand that the fat content of ground or chopped product can affect other nutrients, whether consumers can see the fat in ground or chopped meat and poultry products, and whether consumers can make comparisons among ground or chopped products and other products.

Exemptions

Under §§ 317.400(a)(1) and 381.500(a)(1), food products produced by small businesses are exempted from mandatory nutrition labeling if the product labels bear no nutrition claims or nutrition information. The regulations provide that a small business is any single-plant facility or multi-plant company or firm that employs fewer than 500 people and, as of July 1996, that produces 100,000 pounds or less annually of the product that qualifies the establishment for the exemption from mandatory nutrition labeling. The Agency stated in the preamble to the January 6, 1993, final rule, that it would exempt small businesses from mandatory nutrition labeling requirements because these requirements would create undue economic hardship for small businesses and would create disincentives for these small businesses to develop more nutritious food products (58 FR 638).

For the reasons stated in the January 6, 1993 final rule, FSIS continues to believe that small businesses should be exempt from the mandatory nutrition labeling requirements proposed for ground or chopped meat and ground or chopped poultry products. Therefore, under this proposal, ground or chopped products produced by establishments that qualify for the small business exemption would be exempt from the proposed nutrition labeling requirements.

As discussed below, a significant amount of ground beef is processed at retail. Therefore, FSIS is proposing to revise the regulations to make clear that a single retail store or multi-retail store operation could qualify for the small business exemption. To qualify for this exemption, the retail facility must either be a single retail store that employs 500 or fewer people or a multi-retail store operation that employs 500 or fewer people. In addition, to qualify for the exemption, the retail establishment could produce no more than 100,000 pounds per year of the product that qualifies the establishment for an exemption. Consistent with existing regulations, the qualification of a multi-retail store operation for an exemption from nutrition labeling would be based upon its total annual production of the product for all of its stores that qualifies the operation for the exemption and the total number of employees for all of its stores (see 58 FR 638 for guidance on existing regulations).

As under current regulations, for the purposes of the small business exemption, a food product is a formulation, not including distinct flavors which do not significantly alter the nutritional profile of the product, sold in any size package in commerce. Therefore, ground or chopped products formulated to have different levels of fat would be considered different food products for purposes of the small business exemption. For example, if a multi-retail store operation employed 500 or fewer people in total and produced, in total among all of its stores, 70,000 pounds of ground beef that is 10 percent fat and 60,000 pounds of ground beef that is 20 percent fat annually, the multi-retail store operation would not be required to include nutrition information on the label of these specific products if the labels for these products bore no nutrition claims or nutrition information. However, for example, if a multi-retail store operation employed in total 500 or fewer employees and produced 130,000 pounds of 10 percent fat ground beef annually in total among all of its stores, it would not be exempt from nutrition labeling requirements on the basis of the ''small business exemption.'' FSIS is interested in comments on whether the exemption proposed is appropriate for purposes of ground or chopped products produced at retail establishments.

FSIS does not believe that the reasons that necessitated the establishment of the small business exemption, as explained in the January 6, 1993 final rule, are applicable to the major cuts of single-ingredient, raw meat and poultry products produced by small businesses. For these products, FSIS is proposing that nutrition information may be provided on labels or alternatively at their point-of-purchase. FSIS intends to make point-of-purchase materials available over the Internet free of charge; therefore, the proposed nutrition labeling requirement for major cuts of single-ingredient, raw products should not impose an economic hardship for small businesses, including those that are retail stores. FSIS is proposing to revise §§ 317.400(a)(1) and 381.500(a)(1) to provide that the small business exemption would not apply to the major cuts of single-ingredient, raw products.

Under existing §§ 317.400(a)(7) and 381.500(a)(7), retail stores and similar retail-type establishments are exempted from nutrition labeling requirements for multi-ingredient products processed at retail establishments and ready-to-eat products packaged or portioned at retail establishments (which would include ready-to-eat and multi-ingredient ground or chopped products) if the products bear no nutrition claims or nutrition information. As stated in the preamble to the January 6, 1993 final rule, FSIS exempted retail establishments from mandatory nutrition labeling requirements for these products because the Agency determined that it would be impractical to enforce nutrition labeling requirements on these products prepared or served at retail, and because the Agency concluded, based on a review of National Food Consumption Survey (NFCS) data, that the average person's diet consisted of an insignificant proportion of ready-to-eat retail packaged products or retail processed products (58 FR 639).

Most ground poultry is processed and packaged outside retail establishments. However, most ground beef is ground and packaged at retail. An AMI report states that retail survey respondents reported that an average 18.5 percent of their ground beef sales was from product arriving in a finely ground state, ready to sell or ready for repackaging at retail. Retail stores or distribution centers ground or re-ground 81.3 percent of ground beef sold (The American Meat Institute Foundation, *Relative Ground Beef Contribution to the United States Beef Supply* (May 1996): 7).

As noted above, in the preamble to the January 6, 1993, final rule, the

Agency concluded that the average person's diet consists of an insignificant portion of ready-to-eat retail packaged products or retail processed products. Consumers who purchase ground beef likely consume a significant amount of ground beef processed at retail. Therefore, there may be a significant amount of ground beef products that are ready-to-eat retail packaged products or retail processed products.

As noted above, in the January 6, 1993 final rule, FSIS also exempted retail establishments from mandatory nutrition labeling partly because the Agency determined that it would be impractical to enforce nutrition labeling requirements on products prepared or served at retail. The Agency no longer believes enforcement of nutrition labeling requirements at retail stores to be impractical because FSIS is already conducting testing for *Escherichia coli* O157:H7 at retail.

Because a significant amount of ground beef is processed at retail, the Agency believes that there may be a significant amount of multi-ingredient ground beef retail processed products or ready-to-eat retail packaged products. FSIS also believes that enforcement of nutrition labeling at retail would not be impractical. Further, FSIS has tentatively concluded that ground or chopped products that do not include nutrition information would be misbranded for the reasons stated above. Therefore, the Agency is proposing that the current exemptions from nutrition labeling for ready-to-eat products packaged or portioned at retail stores and similar retail-type establishments and multi-ingredient products processed at retail stores and similar retail-type establishments not apply to ground or chopped meat and ground or chopped poultry products, unless the retail store or similar retail-type establishment meets the requirements of the small business exemption. FSIS requests comments and data on the volume of ground or chopped products that are multi-ingredient retail processed products or ready-to-eat retail packaged products.

FSIS is also proposing to revise the current retail exemptions discussed above to make clear that if a retail establishment qualifies for the small business exemption discussed above, ground or chopped ready-to-eat products packaged or portioned at retail and ground or chopped multi-ingredient products processed at retail would be exempt from nutrition labeling requirements. Although most ground poultry is processed and packaged outside retail establishments, FSIS believes it is important to propose consistent requirements for all ground or chopped products. Therefore, for all ground or chopped products, including ground poultry, these exemptions would not apply, unless the retail store or similar retail-type establishment meets the requirements of the small business exemption.

The exemptions for ready-to-eat products packaged and portioned at retail stores and for multi-ingredient products processed at retail stores would not apply to the major cuts of single-ingredient, raw products because they are not ready-to-eat or multi-ingredient products.

As discussed above, in addition to the small business and retail exemptions, existing §§ 317.400 and 381.500 provide other exemptions from nutrition labeling requirements. These exemptions include products intended for further processing, products not for sale to consumers, products in small packages that are individually wrapped packages of less than ½ ounce net weight, custom slaughtered or prepared products, and products intended for export. To qualify for the first three exemptions, the product's label cannot bear nutrition information or a nutrition claim. In the preamble to the January 6, 1993, final rule, FSIS explained that it was providing an exemption for products intended for further processing and products not for sale to consumers because consumers do not see the nutrition information on products used for further processing or products that are not for sale to consumers. The Agency also explained that it would exempt individually wrapped packages of less than ½ ounce net weight, provided no nutrition claim or nutrition information was made on the label, because these products are an insignificant part of the diet. With regard to the custom exemption, the Agency explained that an exemption should apply because these custom services are performed solely for individuals. Finally, the Agency explained that products intended for export should be exempt because these products are labeled according to the requirements of the country where the product is to be exported (58 FR 639). The Agency has tentatively determined that the bases for these exemptions, as explained in the January 6, 1993 final rule, are valid as applied to nutrition labeling for ground or chopped products and for major cuts of single-ingredient, raw products. Therefore, under this proposal, any ground or chopped product or major cut of single-ingredient, raw product that qualifies for any of these exemptions will continue to be exempt even if the proposed nutrition labeling requirements are adopted.

Under current regulations, products in packages that have a total surface area available to bear labeling of less than 12 square inches are exempt from nutrition labeling, provided the product's labeling includes no nutrition claims or nutrition information and provided that an address or telephone number that a consumer can use to obtain the required information is included on the label. FSIS allowed for nutrition information to be provided by alternative means for products of this size in order to incorporate sufficient flexibility in the regulations (58 FR 47625). For ground or chopped products, FSIS believes it is necessary to provide this flexibility for products in packages that have a total surface area available to bear labeling of less than 12 square inches, provided that the labels for these products bear no nutrition claims or nutrition information. However, because nutrition information for the major cuts of single-ingredient, raw meat and poultry products may be provided on point-of-purchase materials, FSIS is proposing that the provisions for providing nutrition labeling by alternate means for products in packages that have a total surface area available to bear labeling of less than 12 square inches would not apply to the major cuts of single-ingredient, raw meat and poultry products.

As stated in the existing regulations, restaurant menus generally do not constitute labeling or fall within the scope of these regulations. Likewise, restaurant menus that include ground or chopped products generally do not constitute nutrition labeling or fall within the scope of these regulations. Similarly, although a restaurant menu would most likely not include a major cut of single-ingredient, raw product, if it did, the menu would not fall within the scope of these regulations.

Finally, the current regulations provide that foods represented or purported to be specifically for infants and children less than 4 years of age must not include certain nutrient content declarations, because infants and children less than 4 years of age have different nutrition needs than adults and children older than 4 years of age. Under this proposal, any ground or chopped product or major cut of single-ingredient raw product represented or purported to be specifically for infants and children less than 4 years of age would be required to meet these same requirements.

FSIS requests comments on whether its proposed revisions to the nutrition labeling exemptions are appropriate and

necessary for ground or chopped products and for the major cuts of single-ingredient, raw products.

Enforcement and Compliance

Ground or chopped products. FSIS conducts a continuous sampling program of products that fall under the mandatory nutrition labeling program. If the proposal to mandate nutrition labeling of ground or chopped meat and ground or chopped poultry products is adopted, the procedures set forth for product sampling and nutrient analysis in §§ 317.309(h)(1)–(8) and 381.409(h)(1)–(8) will be applicable to ground or chopped meat and to ground or chopped poultry products, respectively. Under this proposal, the Agency will sample and conduct nutrient analysis of ground or chopped products to verify compliance with nutrition labeling requirements, even if nutrition labeling on these products is based on the most current representative data base values contained in USDA's National Nutrient Data Bank or the USDA Nutrient Database for Standard Reference and there are no claims on the labeling. Therefore, if these proposed provisions for ground or chopped meat and poultry products are adopted, the Agency will treat these products as it treats all other products for which regulations already require nutrition labels on their package.

FSIS is proposing that ground or chopped products be subject to compliance even if nutrition labeling on these products is based on the most current representative data base values contained in USDA's National Nutrient Data Bank or the USDA Nutrient Database for Standard Reference because the fat content of different ground or chopped products can vary significantly, depending upon the level of fat in the product being ground and depending on whether product from advanced meat recovery systems is used. Additionally, at this time, there are a limited number of ground or chopped products in the database (*e.g.,* ground beef, 17% fat, 21% fat, and 27% fat).

Further, FSIS program employees cannot visually assess whether nutrition information on the label of ground or chopped products accurately reflects the labeled products' contents because, in most cases, it is not possible to visually assess the level of fat in a ground product. For example, FSIS program employees cannot visually determine whether product that is labeled 17 percent fat ground beef is actually 17 percent fat ground beef as opposed to 27 percent fat (or another percentage of fat) ground beef. Therefore, even if the retailer or other producer uses information from the USDA database to label these products, FSIS will need to conduct compliance sampling and nutrient analysis to ensure that the information on the label accurately reflects the nutrient content of the labeled products.

The Agency is also proposing to revise §§ 317.345(e) and 381.445(e) so that they refer to USDA's National Nutrient Data Bank and its released form, the USDA Nutrient Database for Standard Reference, and to remove current references to the Agriculture Handbook No. 8 series, because this handbook series is now out of print.

For the nutrition labeling of some ground or chopped meat or ground or chopped poultry, nutrient data may be immediately available through the USDA Nutrient Database for Standard Reference (*e.g.,* ground beef with 17 percent fat, ground beef with 21 percent fat, and ground beef with 27 percent fat). Private databases may be available to assess the nutrient content of other products. In addition, producers are able to provide the nutrition information for many products produced to meet purchase specifications. Because producers know the different cuts of meat that go into ground or chopped product, they have the information necessary to determine the nutrient content of the products. FSIS believes that if they need to conduct nutrient analysis, the analysis should not impose an excessive burden. FSIS will develop a list of published sources of information concerning the nutrient content of ground or chopped products, so that industry could obtain available literature from local libraries. This information would facilitate the development of nutrition labels for ground or chopped products. FSIS requests comments and supporting data on the costs that Federal and retail establishments would incur for conducting nutrient analysis of ground or chopped products.

For ground or chopped products that are nutritionally labeled at official establishments, FSIS program employees will collect samples for nutrient analysis at official establishments, consistent with the Agency's existing sampling program of products that fall under the mandatory nutrition labeling program. For ground or chopped products that are produced and nutritionally labeled at retail, it is likely that FSIS program employees will collect samples for nutrient analysis while they are conducting other program activities at retail stores. When collecting samples for nutrient analysis, FSIS will not typically collect samples of the same product from both Federal establishments and retail establishments, unless circumstances warrant sampling the same product at both locations. In general, if a product from a Federal establishment is further processed at retail, FSIS would only collect samples of that product at retail, where it would be packaged for sale to consumers. FSIS can distinguish between product packaged at retail versus product packaged at a Federal establishment.

Major cuts of single-ingredient, raw products. If nutrition labeling of the major cuts of single-ingredient, raw products (other than ground beef or ground pork) is based on USDA's National Nutrient Data Bank or the USDA Nutrient Database for Standard Reference, and there are no nutrition claims on the labeling, FSIS will not sample and conduct a nutrient analysis of these products. The Agency's sampling and testing policy for these products will be consistent with its policy under the current voluntary nutrition labeling program for these products.

For the major cuts of single-ingredient, raw products, FSIS personnel can visually identify the particular cut. If the nutrition information for these products is based on USDA's National Nutrient Data Bank or the USDA Nutrient Database for Standard Reference, and there are no nutrition claims on the labeling, it is not necessary for FSIS to verify the accuracy of this data because it is USDA data. If the nutrition information is based on USDA data, and there are no nutrition claims, FSIS program employees would only have to verify that the data presented accurately pertains to a particular major cut of single-ingredient, raw product. Therefore, FSIS does not need to conduct nutrient analysis for these products.

If the nutrition information on the label or at the point-of-purchase of major cuts of single-ingredient, raw products is based on databases other than the above referenced USDA ones or other data, or if there are nutrition claims on the labeling, these products would be subject to FSIS compliance analysis. Most nutrition information for the major cuts of single-ingredient, raw products is based on USDA data and, typically, no nutrition claims are made on the labeling of these products. Therefore, these products are and would generally continue to be exempt from the FSIS nutrition labeling compliance verification program.

It is likely that FSIS program employees will verify that nutrition information is provided for the major

cuts of single-ingredient, raw products, either on their labels or at their point-of-purchase, at retail stores while they are conducting other program activities at retail. If nutrition information on the point-of-purchase materials or labels for these products is not based on USDA's National Nutrient Data Bank or the USDA Nutrient Database for Standard Reference, or if there are nutrition claims on the labeling, FSIS program employees may collect samples of the major cuts from retail stores for nutrient analysis. Similarly, if major cuts are nutritionally labeled at official establishments and the nutrition information on the label is not based on USDA's National Nutrient Data Bank or the USDA Nutrient Database for Standard Reference, or if there are nutrition claims on the labeling, FSIS program employees may collect samples of these products from the official establishment for nutrient analysis.

Percentage Labeling

FSIS is withdrawing its proposed rule of May 24, 1994 (59 FR 26916), discussed above, which sought to amend the regulations by permitting percentage labeling for lean and fat on ground beef and hamburger, when the product did not meet the regulatory criteria established for ''low fat,'' if the product had nutrition information on its labeling or in point-of-purchase materials that were in close proximity to the product. FSIS is withdrawing this proposal and proposing revised percentage labeling requirements in this rule. In this proposal, FSIS is expanding the categories of ground or chopped products that can have lean percentage labeling.

FSIS is proposing to permit a statement of lean percentage on the label or in labeling of ground or chopped meat and poultry products that do not meet the regulatory criteria for ''low fat.'' The Agency is proposing to do so because many consumers have become accustomed to this labeling on ground beef products, and because FSIS believes this labeling provides a quick, simple, accurate means of comparing all ground or chopped meat and poultry products. The proposed regulatory language requires that a statement of fat percentage be contiguous to, in lettering of the same color, size and type as, and on the same color background as, the statement of lean percentage. The Agency is proposing these requirements concerning size, type, and color to ensure that the statement of the fat percentage is as clear and readily observable as the statement of the lean percentage.

FSIS requests comments on whether percent fat/percent lean information provides a quick, simple, accurate means of comparing all ground or chopped meat and poultry products. Also, FSIS is specifically requesting comments concerning whether its proposed percent fat/percent lean labeling provisions for ground or chopped meat and ground or chopped poultry products that do not meet the regulatory criteria for ''low fat'' would be misleading in any way. FDA's regulations do not provide for the nutrient content claim, ''X percent lean.'' Similarly, FDA does not allow a statement of ''percent fat/percent lean'' on the products it regulates. FSIS requests comment on whether these discrepancies between FDA's and FSIS' regulations will cause confusion among consumers. Finally, FSIS is not requiring the statement of fat percentage to precede the statement of lean percentage but will allow the statements to appear in either order. FSIS requests comment on whether consumers are more likely to read and understand the statement of fat percentage when it precedes the statement of lean percentage than when it follows the statement of lean percentage.

Executive Order 12866—Preliminary Analysis

This action has been reviewed for compliance with Executive Order 12866. As this action is determined ''significant'' for purposes of Executive Order 12866, the Office of Management and Budget (OMB) has reviewed it.

Need for the Rule

During the 1996 nutrition labeling survey, RDI found 57.7 percent of stores surveyed provided nutrition information for 90 percent of the major cuts of single-ingredient, raw meat and poultry products, in accordance with program guidelines. In the 1999 nutrition labeling survey, RDI found that 54.8 percent of stores surveyed provided nutrition information for 90 percent of the major cuts of single-ingredient, raw meat and poultry products, in accordance with program guidelines. Therefore, the most recent surveys did not show significant participation in the voluntary nutrition labeling program as defined in the regulations. Without significant participation, the Agency has tentatively concluded that a lack of consistent and complete nutrition information for the major cuts of single-ingredient, raw products exists. FSIS has also tentatively concluded that producers' ability to control the formulation of single-ingredient, raw ground or chopped products results in variations across these products that may be difficult for consumers to detect. Without nutrition information, FSIS believes that these products would be misbranded under section 1(n) of the FMIA or section 4(h) of the PPIA and that further action is necessary in order to provide consumers with adequate nutrition information that is consistent with the provisions of the 1993 final nutrition labeling rule.

Baseline

In the analysis below, FSIS assumes that the level of voluntary labeling, absent any Federal action, would remain at the current level. The 1999 RDI nutrition labeling survey found that 54.8 percent of the stores surveyed provided nutrition information for 90 percent of the major cuts of single-ingredient, raw meat and poultry products, in accordance with program guidelines. As there has been little change in the level of compliance over the last several years (see discussion of previous surveys above), FSIS believes that it is appropriate to assume that this level of participation in the voluntary nutrition labeling program would not change unless the regulations are revised.

In the analysis below, FSIS also assumes that 80 percent of the retail establishments and processors have made investments in the equipment necessary to print, stamp, or affix nutrition labels on products. This assumption is based on the results of the 1999 RDI safe handling labeling compliance survey. This survey revealed that 96.7 percent of large chains, 90.5 percent of large independent retailers, and 84.1 percent of medium/small independents had already complied with the Mandatory Safe Handling Statements on Labeling of Raw Meat and Poultry Products final rule. FSIS used the 80 percent assumption in order to be conservative and not overestimate the percentage of processors and retailers that have already invested in the necessary equipment. Because the equipment needed to print, stamp, or affix nutrition labels is similar to the equipment used to print, stamp, or affix labels to meet the ''safe handling'' rule's requirements, FSIS assumes that 80 percent of establishments would not have to install new machines for stamping, printing, or affixing nutrition labels for ground or chopped products. FSIS is assuming that the same percentage of processors have invested in this equipment as retailers. Again, this is a conservative assumption. FSIS requests comments concerning whether the 80 percent

estimate is appropriate for both processors and retailers.

To determine how many entities would be affected by this rulemaking, the Agency used a combination of FSIS developed databases and industry sources. Table 1 indicates that in 1999, 63 establishments produced ground poultry and 2,426 establishments produced ground meat. FSIS developed this data on establishments from its Enhanced Facilities Database (EFD). This source does not provide separate data for ground pork, lamb and beef. The number of establishments producing ground pork or lamb is, however, likely to be very small based on information from the AMI survey discussed below in the preliminary cost analysis. One plant that produced either meat or poultry and did not have employment size specification is excluded from Table 1.

TABLE 1.—SIZE DISTRIBUTION OF MEAT AND POULTRY HACCP PLANTS PRODUCING GROUND PRODUCTS

	Poultry	Meat	Total
Very Small	10	1,470	1,480
Small	23	843	866
Large	28	68	96
Missing Values	2	45	47
Total ..	63	2,426	2,489

Note: Very small=9 or less employees; small=10 to 499 employees; large=500 or more employees.

FSIS believes that a significant amount of ground beef is processed at retail. Table 2 shows the number of retail stores in 1999. Most of these stores grind beef. However, FSIS does not have specific data concerning the levels of ground beef ground at retail or on the size of retail stores that process ground beef. FSIS researched Census data for this information, but specific information related to retail establishments processing ground or chopped product was unavailable. Table 2 reports data from FMI. FSIS combined the first two categories of supermarkets with sales in excess of $2 million per year to compare their share with ''other stores'' with sales of less than $2 million per year. In 1999, there were 127,000 retail grocery stores.

TABLE 2.—NUMBER OF RETAIL GROCERY STORES, 1999

	1999 number	1999 % of total
Total	127,000	100
Supermarket Chains & Independent ..	31,500	25
Other Stores	37,200	29
Convenience Stores	57,500	45
Wholesale Clubs	800	0.6

Note: ''Supermarkets'' are defined to have sales of $2 million or more per year. ''Other Stores'' are defined to have sales of under $2 million.

Source: FMI Information Service, *Progressive Grocer, 67th Annual Report of the Grocery Industry.* April 2000, p.20.

With respect to consumers, FSIS assumes that without further action, they would have access to the current level of labeling information and continue with their current dietary habits. The 1999 RDI survey estimated that nutrition labeling, in accordance with the program guidelines, for the major cuts of single-ingredient, raw meat and poultry products was available to 62.8 percent of shoppers. This estimate was based on the sales volume of the stores surveyed. Consistent with the Agency's assumption about compliance among retail stores, FSIS assumes that this level of available nutrition information, in accordance with program guidelines, would not change without further regulatory action.

FSIS used data from USDA's Continuing Survey of Food Intake by Individuals (CSFII), and the associated Diet and Health Knowledge Survey (DHKS) to establish a baseline for fat, saturated fat, and cholesterol intake. The CSFII collects data on food intakes by individuals. Most recently, USDA conducted three separate one-year surveys for 1994–96. These surveys recorded two nonconsecutive days of food consumption, and collected information on what and how much individuals ate, and where the food was obtained. This information was used to develop estimates of nutrient intake for each individual respondent. The DHKS gathered data on consumers' knowledge of issues related to diet and heath, and contained several questions relating to the use of nutrition information labels and nutrition information for food products. Linking information from the two surveys allowed FSIS to correlate use of nutrition information from the DHKS with nutrient intake data from the CSFII. The Agency focused here on two key questions pertaining to nutrition information use on all food products and on meat and poultry in particular:

Q: *When you buy foods, do you use the nutrition panel that tells the amount of calories, protein, fat, and such [e.g., sodium, total carbohydrate] in the serving of a food: Often (always), sometimes, rarely, or never?* (Question 16–c, DKHS)

Q: *When you buy raw meat, poultry, or fish, do you look for nutrition information: Often (always), sometimes, rarely, or never? (Question 17–I, DHKS).*

Using data from the CSFII and the DHKS, FSIS estimated rates of nutrition information usage, based on these two questions. The results are presented in Table 3. Note that rates of label usage are uniformly higher for women than for men, and that rates of nutrition label usage are higher for food products as a whole than for raw meat, poultry and fish products.

TABLE 3.—CONSUMER USAGE OF NUTRITION INFORMATION

	Often		Sometimes		Rarely/never		Do not buy	
	Men	Women	Men	Women	Men	Women	Men	Women
Use Nutrition Facts Panel	26.7	41.7	25.6	32.6	47.7	25.6	n/a	N/A
Look for Nutrition Information on Raw Meat, Poultry, or Fish	16.9	22.1	18.2	18.0	62.7	57.9	2.2	2.0

Note: Percent of respondents, based on 3 year weighted averages, 1994–1996.

To establish a baseline of Intake of Fat, Saturated Fat, and Cholesterol, FSIS used the same data sources to estimate dietary intake of fat, saturated fat, and cholesterol, along with the percentage of calories from fat and saturated fat. The CSFII contains information on the intake of these food components, based on the food consumption reported by survey respondents.

Tables 4 and 5 present the estimated intake of fat, saturated fat, and

cholesterol from the CSFII, broken down by types of nutrition information usage reported in the DHKS.

TABLE 4.—DIETARY INTAKE OF FAT, SATURATED FAT, BY USAGE OF NUTRITION FACTS PANEL

	Often	Sometimes	Rarely/ never	Average
Men:				
Total Fat	83.13	92.52	98.14	92.51
Saturated Fat	26.93	31.43	33.67	31.12
Cholesterol	293.39	327.77	353.97	339.07
Women:				
Total Fat	55.95	62.78	63.98	60.16
Saturated Fat	18. 04	20.77	21.39	19.71
Cholesterol	196.60	216.84	230.03	210.53

Note: Fat intake in grams, cholesterol in milligrams.

TABLE 5.—DIETARY INTAKE OF FAT, SATURATED FAT, BY USAGE OF NUTRITION INFORMATION ON RAW MEAT, POULTRY, OR FISH

	Often	Sometimes	Rarely/ never	Do not buy	Average
Men:					
Total Fat	81.64	92.49	96.09	74.48	92.51
Saturated Fat	27.20	31.09	32.44	24.02	31.12
Cholesterol	311.81	321.49	355.14	236.83	339.07
Women:					
Total Fat	53.90	61.70	62.18	57.23	60.16
Saturated Fat	17.39	20.60	20.41	17.27	19.71
Cholesterol	194.32	219.27	216.55	135.89	210.53

Note: Fat intake in grams, cholesterol in milligrams.

The estimated intake of fat and saturated fat can also be expressed as the percentage of calories from fat. This conversion is done with the following formula:

Percentage Calories from Fat = 900*fat/energy,

Where energy is total caloric intake (kilocalories), as measured by the CSFII. Tables 6 and 7 show the percentage of calories from fat (and total cholesterol) broken down by label and nutrition information usage:

TABLE 6.—PERCENTAGE OF CALORIES FROM FAT AND TOTAL CHOLESTEROL, BY USAGE OF NUTRITION FACTS PANEL

	Often	Sometimes	Rarely/ never	Average
Men:				
Total Fat	31.54	33.63	35.27	33.44
Saturated Fat	10.19	11.38	12.00	11.19
Cholesterol	293.39	327.77	353.97	339.07
Women:				
Total Fat	31.14	33.40	34.49	32.49
Saturated Fat	10.00	11.38	11.59	10.64
Cholesterol	196.60	216.84	230.03	210.53

Note: Fat and Saturated Fat values are percentage of calories from fat source; cholesterol in milligrams.

TABLE 7.—PERCENTAGE OF CALORIES FROM FAT AND TOTAL CHOLESTEROL, BY USAGE OF NUTRITION INFORMATION ON RAW MEAT, POULTRY, OR FISH

	Often	Sometimes	Rarely/ never	Do not buy	Average
Men:					
Total Fat	31.67	34.03	33.88	29.69	33.44
Saturated Fat	10.53	11.36	11.37	9.52	11.19
Cholesterol	311.81	321.49	355.14	236.83	339.07
Women:					
Total Fat	31.62	32.94	32.87	26.79	32.49
Saturated Fat	10.15	10.82	10.82	9.19	10.64
Cholesterol	194.32	219.27	216.55	135.89	210.53

Note: Fat and Saturated Fat values are percentage of calories from fat source; cholesterol in milligrams.

Regulatory Options

FSIS considered several regulatory options: (1) Continuing with the existing voluntary program; (2) making the voluntary program mandatory; (3) requiring nutrition information on labels of all ground or chopped products and making the voluntary program mandatory for the major cuts of single-ingredient, raw meat and poultry products; (4) requiring nutrition information on labels of the major cuts of single-ingredient, raw meat and poultry products and on all ground or chopped products; and (5) requiring nutrition information on labels of all single-ingredient, raw meat and poultry products and all ground or chopped products.

Option 1: Continuing with the voluntary program. FSIS could continue with the existing voluntary program and attempt to increase participation by providing additional assistance to the nonparticipants. The 1999 nutrition labeling survey found a significant difference in participation rates according to outlet type. Chain stores showed a 65.5 percent participation rate, large independents showed a 46.5 percent participation rate, and medium and small independents showed a participation rate of 26.3 percent. Thus, FSIS could provide nutrition information or point-of-purchase materials to independent retail stores to encourage their participation in the voluntary nutrition labeling program.

Retail establishments would continue to provide, on a voluntary basis, nutrition labeling for all single-ingredient, raw meat and poultry products, including major cuts identified in §§ 317.344 and 381.444 (including ground beef and ground pork) and cuts that are not identified as major cuts (including ground or chopped products not covered in §§ 317.344 and 381.444). This information could be provided at the point-of-purchase or on the label of the product.

Option 2: Make the voluntary program mandatory. FSIS could make the voluntary program mandatory by requiring nutrition information, either on labels or at the point-of-purchase, for all single-ingredient, raw meat and poultry products, including the major cuts of single-ingredient, raw products identified in §§ 317.344 and 381.444 (including ground beef and ground pork) and the nonmajor cuts of single-ingredient, raw meat and poultry products (including ground or chopped products not covered in §§ 317.344 and 381.444). Under this option, FSIS would assume that most retailers would display point-of-purchase information for these products rather than nutrition labels, because this is an inexpensive means of providing nutrition information for multiple products. This approach does not allow for any distinction between ground or chopped meat and poultry products and other cuts of meat. In addition, this approach does not distinguish between the major and nonmajor cuts.

Option 3: Require nutrition information on labels of all ground or chopped meat and poultry products and make the voluntary program mandatory for the major cuts of single-ingredient, raw meat and poultry products (other than ground beef and ground pork). FSIS could require nutrition information on the labels of all ground or chopped products and could require nutrition information, either on their labels or at their point-of-purchase, for the major cuts of single-ingredient, raw meat and poultry products identified in §§ 317.344 and 381.444 (other than ground beef and ground pork). Retail establishments and producers could continue to voluntarily provide nutrition information for nonmajor cuts of single-ingredient, raw meat and poultry products that are not ground or chopped. This approach allows for a distinction between ground or chopped meat and poultry and other cuts of meat and poultry. It also allows for a distinction between major and nonmajor cuts. Consistent with the regulations, the voluntary nutrition labeling surveys only assessed whether nutrition labeling was provided for the major cuts of single-ingredient, raw meat and poultry products. Until some assessment is made of whether adequate information is being provided for the nonmajor cuts of single-ingredient, raw products that are not ground or chopped, FSIS cannot determine whether it would be beneficial to require nutrition information for these products.

In their June 3, 1997, petition discussed above, CSPI stated that USDA should require complete ''Nutrition Facts'' on ground beef labels that make nutrient content claims. This option would require complete ''Nutrition Facts'' on all ground beef labels. Thus, CSPI's petition supports this aspect of this option. However, the CSPI petition also stated that point-of-purchase information is generally a poor substitute for labels and that the ''Nutri-Facts'' posters and brochures used by many stores have severe flaws. Thus, the CSPI petition does not support providing nutrition labeling at the point-of-purchase.

Option 4: Require nutrition information on labels of the major cuts of single-ingredient, raw meat and poultry products and on all ground or chopped products. FSIS could require nutrition information only on labels of the major cuts of single-ingredient, raw meat and poultry products identified in §§ 317.344 and 381.444 (including ground beef and ground pork) and on all other ground or chopped products not covered in §§ 317.344 and 381.444. As in Option 3, establishments could voluntarily provide nutrition information, either at the point-of-purchase or on the label, for the nonmajor cuts of single-ingredient, raw meat and poultry products that are not ground or chopped. This approach allows for a distinction between major cuts and nonmajor cuts that are not ground or chopped. Until some assessment is made of whether adequate information is being provided for the nonmajor cuts of single-ingredient, raw products that are not ground or chopped, FSIS cannot determine whether it would be beneficial to require nutrition information for these products.

Option 5: Require nutrition labels on all single-ingredient, raw meat and poultry products and on all ground or chopped products. FSIS could require nutrition information on labels of all single-ingredient, raw meat and poultry products, including both the major cuts of single-ingredient, raw products identified in §§ 317.344 and 381.444 (including ground beef and ground pork) and nonmajor cuts of single-ingredient, raw products, and on all ground or chopped products not covered in §§ 317.344 and 381.444. An April 4, 2000, press release on CSPI's web page, quotes the organization's executive director as stating, ''Frozen and processed meats already have nutrition labels. That same information should be on fresh meat'' (http://www.cspinet.org/new/nutr_labeling.html). Thus, CSPI supports this option.

FSIS requests comments on whether any of the options not chosen would be a viable alternative to the option chosen and on the possible costs and benefits of the options presented.

Quantification of Costs and Net Benefits of Regulatory Options

FSIS' preliminary analysis does not allow for a comparison of net benefits among the regulatory options. The Agency is unable, at this time, to distinguish between the benefits that accrue from moving from a voluntary program to a mandatory program and the benefits that would accrue from requiring nutrition labels on products versus nutrition information on point-

of-purchase materials. Furthermore, although a comparison of costs of the regulatory options might be possible, FSIS has not quantified all costs. As a result, FSIS believes that it would be inappropriate to provide a comparison of net benefits of the regulatory options considered at this time.

Below, FSIS provides a preliminary analysis of the costs and benefits of the proposed rule. FSIS requests comments on this preliminary analysis and any data that would be useful in estimating the costs and benefits of the proposed rule.

The Proposed Rule

FSIS is proposing Option 3. FSIS is proposing to require nutrition labels on all ground or chopped meat and poultry products, with or without added seasonings, unless an exemption applies, and to make the voluntary nutrition labeling program mandatory for major cuts of single-ingredient, raw meat and poultry products identified in §§ 317.344 and 381.444, unless an exemption applies.

Without a mandatory labeling program for the major cuts of single-ingredient, raw products (that are not ground or chopped), FSIS believes that complete and consistent information on the nutritional attributes of these products will not be provided to every consumer. FSIS also believes that the producers' ability to control the fat and nutrient content of ground or chopped product and the consumers' inability to detect the nutritional variations in these products through observation makes it necessary to further require that labeling requirements for all ground or chopped meat and poultry products be consistent with those currently required for multi-ingredient and heat processed products. The Agency has tentatively concluded that ground or chopped products and the major cuts of single-ingredient, raw products would be misbranded without nutrition information under the FMIA and the PPIA (21 U.S.C. 601(n)(1) and 21 U.S.C. 453(h)(1)).

Many exemptions from the proposed nutrition labeling requirements would apply to ground or chopped products and to the major cuts of single-ingredient, raw products. The existing regulations provide that food products produced by small businesses are exempted from mandatory nutrition labeling if the product labels bear no nutrition claims or nutrition information. Under this rule, small businesses that qualify for the exemption would be exempt from the mandatory nutrition labeling requirements proposed for ground or chopped products. However, the small business exemption would not apply to the major cuts of single-ingredient, raw meat and poultry products. Also, the existing regulations provide that retail stores and similar retail-type establishments are exempted from nutrition labeling requirements for multi-ingredient products processed at retail and ready-to-eat products packaged or portioned at retail if the products bear no nutrition claims or nutrition information. In this rule, FSIS is proposing that these exemptions not apply to ground meat and poultry products, unless the retail store or similar retail-type establishment meets the requirements for the small business exemption. For a full discussion of the exemptions, see the ''Exemptions'' heading above. FSIS is requesting comments on whether these exemptions are appropriate and necessary for retail and Federal establishments. The preliminary cost and benefits analyses below do not take the exemptions into account because FSIS does not have sufficient data concerning the establishments that would qualify for the small business exemption or the volume of product that would be exempted from nutrition labeling requirements. Therefore, FSIS requests comments on how the exemptions would affect the costs and benefits of the proposed rule.

In addition to the proposed requirements discussed above, FSIS is proposing to amend the nutrition labeling regulations to provide that when a ground or chopped product does not meet the regulatory criteria to be labeled ''low fat,'' a lean percentage claim may be included on the label or in labeling as long as a statement of the fat percentage also is displayed on the label or in labeling. Under existing regulations, in order for the phrase ''____ percent lean'' to be used on the label or in labeling of a product, the product must meet the regulatory criteria for ''low fat.'' Most ground beef and hamburger products do not qualify as ''low fat.'' Therefore, existing regulations preclude the use of the term ''____ percent lean'' on these products. FSIS extended the compliance enforcement date for nutrition labeling requirements for ground beef and hamburger indefinitely, pending publication of a final rule on percentage labeling for lean and fat on ground beef and hamburger (59 FR 39941); therefore, producers and retailers continue to use the term ''lean'' in percentage labeling on the packages of ground beef and hamburger. FSIS is proposing to allow this information on the label or in labeling for ground or chopped products because many consumers have become accustomed to this labeling on ground beef products, and because FSIS believes this labeling provides a quick, simple, accurate means of comparing all ground or chopped meat and poultry products. Under the preliminary cost analysis below, FSIS provided a preliminary cost estimate for developing new labels that include statements of the lean percentage and the fat percentage. FSIS intends to develop a more detailed analysis of this labeling provision in the final rule.

Preliminary Estimations of the Cost of the Proposed Rule

Making the voluntary program mandatory for the major cuts of single-ingredient, raw meat and poultry products. FSIS believes that the cost of providing nutrition labeling for the major cuts of single-ingredient, raw meat and poultry products should not be significant. Retail establishments can choose between providing nutrition information through point-of-purchase materials or providing nutrition information on labels. Processors may also provide the information on labels or on point-of-purchase materials; however, FSIS would enforce these requirements at retail. Point-of-purchase materials are available for a nominal fee ($12.00 for members, $24.00 for nonmembers) through the Food Marketing Institute's web site (http://www.fmi.org). These materials meet the point-of-purchase requirements in this proposed rule. Also, FSIS intends to make point-of-purchase materials available, free of charge, on the FSIS web site. Another factor that would mitigate the cost impact of this requirement is that, based on the nutrition labeling survey conducted in 1999, many stores are currently providing nutrition information for the major cuts of single-ingredient, raw products. As discussed above, the 1999 survey found that 54.8 percent of stores surveyed provided nutrition information for 90 percent of the major cuts of single-ingredient, raw meat and poultry products, in accordance with program guidelines.

FSIS estimates the one-time costs to retail establishments for obtaining point-of-purchase materials that include nutrition information for the major cuts of single-ingredient, raw meat and poultry products would be about $0.7 million. FSIS is estimating that all retailers would display point-of-purchase information for the major cuts of single-ingredient, raw meat and poultry products, because this is an inexpensive means of providing nutrition information for multiple

products and because this rule will not require that manufacturers include nutrition labels on the major cuts of single-ingredient, raw meat and poultry products. FSIS estimates that obtaining point-of-purchase materials and making them available to consumers would take an average of 30 minutes. As shown in Table 2 above, there were 69,500 retail stores in 1999 (excluding convenience stores that do not normally sell meat products), and FSIS estimates salary and expenses costs for providing nutrition information to be $20 per hour (69,500 * 0.5 * $20 = 0.7 million). This estimate does not take into account the voluntary nutrition labeling survey results which show that many stores currently provide nutrition information for the major cuts of single-ingredient, raw products. Information concerning this cost is addressed in the Information Collection Request submitted to OMB and in the section on paperwork requirements below.

As discussed above, FSIS is proposing that many of the existing exemptions from nutrition labeling requirements would apply to the major cuts of single-ingredient, raw meat and poultry products. However, FSIS is proposing that the small business exemption from nutrition labeling requirements would not apply to the major cuts of single-ingredient, raw products. As explained above, FSIS does not believe that the reasons that necessitated the establishment of the small business exemption, as explained in the January 6, 1993, final rule, are applicable to the major cuts of single-ingredient products. Also, because nutrition information for the major cuts of single-ingredient, raw products may be provided on point-of-purchase materials, FSIS is proposing that the provisions for providing nutrition labeling by alternative means for products in packages that have a total surface area available to bear labeling of less than 12 square inches would not apply to the major cuts of single-ingredient, raw products.

Nutrition labeling of ground or chopped products. The costs of required labels would be incurred by ground meat or poultry processors supplying labeled products to retail stores for sale to consumers and by retail establishments who grind or chop meat and poultry products in their stores for sale to consumers. Costs would include the fixed costs of equipment, the operating costs of printing labels, including materials and labor, and the cost of nutrient analysis.

FSIS estimated the costs of nutrition labels based on the cost analysis conducted for the ''Mandatory Safe Handling Statements on Labeling of Raw Meat and Poultry Products'' proposed rule published November 4, 1993 (58 FR 58922); the costs estimates were not revised in the final rule in response to comments. The rationale for using the ''safe handling'' cost analysis is that the costs of the labels in these two proposals would be comparable for cost estimation purposes. FSIS is not using the regulatory impact analysis developed for the nutrition labeling regulations for cost estimation purposes because much less nutrient analysis will be required at this time than was required when the 1993 nutrition labeling regulations were published (January 6, 1993). There are currently much more data available for nutrition labeling than were available when the 1993 nutrition labeling regulations were published.

Safe Handling Cost Estimates

Fixed costs. The ''safe handling'' rule estimated the fixed costs of installing or retrofitting labeling equipment for stamping, printing, or affixing labels. The ''safe handling'' rule had estimated the fixed costs of labeling fresh meat and poultry products for processors to range from $50 to $100 million. These costs were based on an estimate that there were somewhere between 50,000 and 100,000 labels approved for use by processors that were affected and an estimated average label modification cost of $1,000 (58 FR 58925).

The fixed costs of compliance with the ''safe handling'' labeling rule for retail establishments were estimated to range from $144 to $216 million. These estimates assumed that larger retailers would modify their equipment to increase their label size to combine weight and price information with safe handling instructions if their existing equipment was incompatible. These estimates were based on the costs to the then (*i.e.,* 1992) existing 23,813 supermarkets (with annual sales exceeding $2.5 million/year). Based on conversations with equipment suppliers and two to three retailers, FSIS estimated that upgrading the automated scales/wrapping systems to accommodate a larger label would cost $6,000 to $9,000 per store. Assuming that all 24,000 (approx.) supermarkets upgraded their equipment, the cost would range from $144 ($6000 x 24,000) to $216 ($9000 x 24,000) million. FSIS estimated these costs for large retail chains, *i.e.,* supermarkets, because they constituted three-fourths of total grocery stores sales. For example, in 1992, of the total grocery stores sales of $360 billion (excluding sales taxes), supermarkets accounted for $274 billion, or 76 percent. FSIS also estimated these costs for large retail chains because FSIS assumed that small retailers would produce a second label using existing equipment to meet the ''safe handling'' rule requirements and, therefore, would incur mostly operating costs rather than fixed costs to meet the ''safe handling'' rule requirements.

Operating costs. The ''safe handling'' analysis assumed that all meat and poultry products already included some form of commercially prepared labels, and that the incremental cost of adding safe handling instructions to the label would increase the total per label cost by $0.0025 to $0.005. This estimate was also supported by the comment of one large retail chain. In their response to the an earlier interim rule that included a preliminary economic analysis (58 FR 43478), this commenter stated that including the safe handling label, as part of their price labels, would double the cost of their labels from $0.0025 to $0.005 per label. For firms that indicated that they would need separate labels for the safe handling statement (*e.g.,* the small retail stores), the most frequent comment in response to the preliminary analysis was that the labels for safe handling would cost $0.01 each. In the ''safe handling'' rule, FSIS assumed that large retail chains would incur the lower costs ($0.0025 to $0.005) per label by including the safe handling statement as part of their price label. For the smaller firms requiring separate labels for the safe handling statement, FSIS assumed that their costs would be $0.01 per package. The higher costs for small retailers can be explained by the absence of economies of scale available to these retailers.

As discussed above, in 1992, large retail chains had sales that accounted for 76 percent of total grocery store sales. In the ''safe handling'' rule, FSIS rounded this number and assumed that 80 percent of packages of meat and poultry products labeled and sold through retail would be sold through large retail chains. The ''safe handling'' rule estimated that there were 10 billion packages of meat and poultry product prepared and sold through retail. Therefore, the rule estimated that 8 billion packages would be prepared and sold by large retail chains and the remaining 2 billion packages would be prepared and sold by small retail firms. The safe handling rule estimated that the 10 billion retail packages would have recurring costs associated with the ''safe handling'' rule of $50 million per year. This estimate assumed that the 8 billion packages sold through large retail chains would have recurring costs of $0.00375 (midpoint of $.0025 and $0.005) and the 2 billion packages sold

through small stores would have recurring costs of $0.01 per package.

In the ''safe handling'' rule, the additional labor costs for applying the 2 billion separate safe handling labels by use of label guns for small firms were estimated. Based on the number of staff years at 160 and an average salary of $20,000 per year, the ''safe handling'' rule estimated the labor costs at about $3.2 million per year.

The ''safe handling'' rule did not estimate operating costs of labeling for processors because they were expected to incur larger, upfront, one-time fixed costs, associated with making permanent modifications to labels.

Adjustments to the Costs in the Safe Handling Rule

Estimating the volume of ground or chopped products. As explained above, the ''safe handling'' rule estimated the cost of labeling all fresh meat products. The number and volume of products that would require nutrition labels in this proposed rule are, however, much smaller relative to the number and volume of products in the ''safe handling'' rule, because the proposed rule would require nutrition labels on only ground or chopped meat and poultry products. FSIS adjusted the costs of the ''safe handling'' rule to reflect the costs related to the volume of ground or chopped product produced.

In 1996, total U.S. annual production of ground beef was 7 billion pounds (American Meat Institute Foundation, *Relative Ground Beef Contribution to the United States Beef Supply* (May 1996): 5). The American Meat Institute (AMI) report cited has not been updated. However, according to AMI staff, total U.S. annual production of ground beef was 7.2 billion in 1998, an increase of less than 3 percent. For estimation purposes, FSIS believes the 1996 data are still valid. Based on discussion with AMI staff members, approximately 50 percent (or 3.5 billion) of this output is sold through retail stores (the rest goes through restaurants and institutions). As regards other ground or chopped products such as poultry, pork, and turkey, AMI estimates that for every 100 pounds of ground beef, 12.3 pounds of these competing meats are produced (The American Meat Institute Foundation, *Relative Ground Beef Contribution to the United States Beef Supply* (May 1996): 8). The estimate of 12.3 pounds is based on a survey sent by AMI to the top 50 retail chains and wholesalers. No attempt was made to expand the survey responses to a national level or develop estimates for the entire retail sector. In the absence of any information that would validate the survey responses for the entire retail sector, however, FSIS employed these estimates as approximate trends. However, FSIS invites comments and requests nationally representative data for the retailers for analysis of the final rule.

To arrive at the total volume of ground or chopped meat and poultry products sold in retail stores, FSIS first assumed that 50 percent of total production, or 3.5 billion pounds, represented ground or chopped beef sold in retail stores. Second, based on the AMI survey referred to above, FSIS assumed that ground or chopped poultry and other meats represented 12.3 percent of ground beef sales. Therefore, the total annual volume of ground or chopped meat and poultry sold through retail establishments amounted to 3.9 (3.5 + .4) billion pounds [3.5 billion + (3.5 billion * 0.123 = .431 billion].

Fixed costs. As explained above, the ''safe handling'' rule had estimated the fixed costs of safe handling labeling for processors to range from $50 to $100 million. Also explained above, the fixed costs of compliance with the ''safe handling'' labeling rule for retail establishments were estimated to range from $144 to $216 million. The estimation of these fixed costs assumed that larger retail stores would modify equipment to increase their label size to combine weight and price information with safe handling instructions if their existing equipment was incompatible. In this rule, retail stores also might modify equipment to increase their label size to combine weight and price information with nutrition information.

To calculate the fixed costs of nutrition labeling of ground or chopped products, FSIS adjusted the fixed costs in the ''safe handling'' rule to account for existing equipment. FSIS believes that many establishments have already incurred fixed costs required for the ''safe handling'' rule. For example the 1999 safe handling survey revealed that 96.7 percent of large chains, 90.5 percent of large independents, and 84.1 percent of medium/small independents had already complied with the ''safe handling'' rule requirements. Therefore, as explained in the ''Baseline'' section above, FSIS made the conservative assumption that 80 percent of the estimated fixed costs were already incurred by retailers and processors and only 20 percent of the estimated fixed costs would be required for compliance with the proposed rule. Hence the estimated fixed costs of the proposed rule would range from $10 million to $20 million for processors and from $28.8 million to $43.2 million for retailers.

Although these costs were estimated based on 1992 prices, there has been virtually no change in their prices in the year 2000. For example, the index number for producer prices for blast furnaces and steel mills was 105.8 (1982 = 100) in 1992, and it was almost the same at 105.3 (1982 = 100) in July 2000. FSIS used this index number because these producers also manufacture equipment used for stamping and printing labels. Therefore, these costs are current and do not need any updating. These costs are shown in columns 1 and 2, Table 8.

Operating costs. As explained above, the safe handling analysis had assumed that all meat and poultry products already included some form of commercially prepared labels, and that the incremental cost of adding safe handling instructions to the labels would increase the total per label cost by $0.0025 to $0.005. The ''safe handling'' rule also estimated that the cost to firms that would need separate labels for the safe handling statement would be $0.01 per label. As in the ''safe handling'' rule, in this rule, FSIS is assuming that large retail chains would incur the lower costs ($0.0025 to $0.005) per label, because they would include nutrition information as part of their price labels. Similarly, consistent with the ''safe handling'' rule, for this rule, FSIS is assuming that smaller stores would apply a separate label with nutrition information.

As explained above, in the ''safe handling'' rule, FSIS assumed that large retail chains would account for 80 percent of all retail packages labeled at retail and that the smaller firms would account for 20 percent of all retail packages. FSIS believes that the estimate that 80 percent of retail-labeled packages are sold through large retail chains is likely to be valid in the year 2000 (without the need to round up) because of a number of mergers, acquisitions, and consolidations in this sector in the recent years. For example, Royal Ahold bought Giant Foods, Albertson's bought American Stores, SUPERVALUE bought Richfood, and Food Lion bought Hannaford (Sean Mehegan, ''Merger Mania—Consolidation Changes the Face of the North American Supermarket Sector,'' *Meat & Poultry* (September 1999): 22–25). FSIS requests comments and data concerning whether the estimate that 80 of retail-labeled packages are sold through large retail chains is accurate.

For the proposed rule, FSIS is assuming that a package of ground or chopped meat or poultry would average

two pounds. FSIS believes that most packages of ground or chopped product weigh at least a fraction over one pound; however, this product is also sold in bulk size packages that are significantly over one pound. Therefore, FSIS believes that two pounds is a reasonable estimate of the average weight of a package of ground or chopped product. If FSIS were to assume that the average size package were 1 pound, this assumption would double the estimated operating costs below. FSIS requests comments on whether two pounds is an accurate average weight estimate for packages of ground or chopped product.

Since the estimated annual volume of ground or chopped product sold through retail is about 4 billion pounds, there will be 2 billion packages (at two pounds each) requiring the labels. Because FSIS assumes that 80 percent of these packages would be accounted for by large firms, their corresponding shares of the packages would be 1.6 billion (80 percent of 2 billion) and small firms would account for the rest, *i.e.,* 0.4 billion packages (20 percent of 2 billion). Assuming a mid-point cost of $0.00375 for the range of safe handling label costs for large retail stores ($0.0025 to $0.005), the compliance cost for these stores would be $6 million (1.6 billion packages * $0.00375). The compliance cost for separate nutrition labels required by small firms would be about $4 million (0.4 billion packages times $0.01 per package). These costs were estimated in 1992, and there was an increase of 20 percent in related costs in July 2000. This increase is based on the producer price index numbers for plastics, foil, and coated paper bags, the materials on which labels would be printed (1992 = 142.9, July 2000 = 171.7). Therefore, these operating costs would increase by $2 million to $12 million in current prices.

As explained above, the ''safe handling'' rule estimated the labor costs of small firms applying separate safe handling labels by use of label guns at about $ 3.2 million per year, based on 2 billion labels, and 160 staff years at an average salary of $20,000 per year. According to data from the Bureau of Labor Statistics, the average hourly earnings in June of 1999 were $7.88 per hour. Assuming at least 2,000 work hours per year, the estimated annual earnings would be $15,760. FSIS adjusted the costs in the ''safe handling'' rule based on this earnings estimate. Therefore, FSIS revised the estimated ''safe handling'' labor costs to small firms to $3.0 million per year (160 staff years times $16,000 per staff totals $2,560,000 per year, which FSIS rounded to $3 million). Since these costs were for 2 billion packages for the safe handling rule, the prorated costs for 400 million packages for the proposed rule would be $0.6 million (400 million times $3 million divided by 2 billion). Therefore, estimated total operating or recurring costs associated with the proposed rule would be $12.6 (12 + 0.6). These costs are shown in Table 8, row 2, column 3.

The ''safe handling'' rule did not estimate operating costs of labeling for processors because they were expected to incur larger, upfront, one-time fixed costs, associated with making permanent modifications to labels. Therefore, Table 8, row 1, column 3, reports their operating costs as ''Not Applicable'' (NA). The recurring costs of nutrition labeling for processors other than retail establishments are not estimated in this rule because, again, FSIS expects these processors to incur larger, upfront, one-time fixed costs, associated with making permanent modifications to their existing labels.

Paperwork burden costs. FSIS estimates that the one-time development and recordkeeping costs associated with nutrition labels for ground or chopped products for Federal establishments and retailers will total $8.8 million. As explained above, FSIS estimates the one-time costs to retail establishments for obtaining point-of-purchase materials that include nutrition information for the major cuts of single-ingredient, raw products will be about $0.7 million. The paperwork burden cost estimates for the required nutrition labels for ground or chopped products are based on the time required to develop 3 nutrition labels (120 minutes each), the time required for recordkeeping for the supporting data at Federal and retail establishments (5 minutes), and the time required for Federal establishments to submit label approval applications to FSIS (15 minutes). FSIS estimates that there are 2,489 Federal establishments affected by the rule and 69,500 retail establishments and estimates salary and expenses for these activities to be $20 per hour. Information concerning these costs is addressed in the Information Collection Request submitted to OMB and the Paperwork Requirements section below.

Table 8 shows that total operating compliance costs associated with nutrition labels for ground or chopped product are estimated at $12.6 million.

TABLE 8.—ESTIMATED COMPLIANCE COSTS FOR GROUND OR CHOPPED PRODUCTS ($ MILLION)

	Fixed costs		Operating costs	Paperwork burden costs
	Low	High		
Processors	10.0	20.0	NA	.3
Retailers	28.8	43.2	12.6	8.5
Total	38.8	63.2	12.6	8.8

Discounted value of compliance costs. The low and high estimates of fixed costs were added to the operating costs and paperwork burden costs estimated above. Therefore, FSIS obtained two series of costs, low and high, for a period of 20 years. The low estimate was $60.2 million per year ($38.8 million + 12.6 million + 8.8 million) and the high cost estimate was $84.6 million ($63.2 million + $12.6 million + $8.8 million). These series were discounted at 7 percent to compare them with discounted benefits, which are also discounted at 7 percent. It was assumed that the costs would be incurred in the middle of each year for the next 20 years. The results revealed that the present values of compliance costs for the next 20 years (from 2001 to 2020) ranged from $659.69 million to $927.05 million. Other than the paperwork costs discussed above, there should not be many costs associated with nutrition labels that would exceed the estimates in the ''safe handling'' rule. Nutrient content is dependent on fat levels, and there is a direct relationship between fat and other nutrients. Producers should be able to use available data or to extrapolate from existing data to develop the data for nutrition labels. In addition, FSIS will develop a list of published sources of information concerning the nutrient content of ground or chopped products,

so that industry could obtain available literature from local libraries. This information would facilitate the development of nutrition labels for ground or chopped products. FSIS requests comments and data on any additional costs associated with nutrition labels that were not included in this preliminary cost analysis.

Although nutrition labels are not currently required on single-ingredient, raw ground or chopped products, such labels are often provided voluntarily on these products. According to information submitted by CSPI, a number of major supermarket chains, including Dominick's, Fred Meyer, Jewel, Kroger, Wegman's, Winn-Dixie, Albertson's, and some Lucky and Safeway stores, now include full ''Nutrition Facts'' labels on their ground beef (Bonnie Liebman, ''Where's the Beef Labeling,'' *Nutrition Action Healthletter* (June 1999): 8–11). Because FSIS does not have complete information concerning the volume of ground or chopped packages that bear nutrition labels, FSIS is estimating the costs of labels for all packages of ground or chopped product in the cost estimates above.

Impact of estimated costs. The preceding estimates of fixed, operating and paperwork burden compliance costs for the proposed requirements concerning ground or chopped product at $60.2 to $84.6 million are not likely to be excessive relative to the volume of output of ground or chopped meat and poultry products sold at retail. For example, as noted above, the volume of these products is estimated at 3.9 billion pounds. Therefore, these costs would range from 1.5 to 2 pennies per pound ($60.2 million/3.9 billion pounds to $84.6 million/3.9 billion pounds). FSIS has not conducted a thorough analysis of how the costs to Federal and retail establishments would affect the price, supply, and demand of ground or chopped products. Similarly, FSIS has not thoroughly evaluated how any changes in consumer behavior that may occur as a result of this rule would affect the price, supply, and demand of ground or chopped products.

Percentage Labeling

The proposed percentage labeling for ground or chopped products would not result in significant costs because such labeling would be optional rather than mandatory. If retailers and other producers found this labeling to be costly, they would simply not exercise this option. Because FSIS extended the compliance enforcement date for use of the term ''lean'' for these products, pending publication of a final rule on percentage labeling for lean and fat on ground beef and hamburger, many of these products already bear these statements on their labels. If producers chose to develop new labels, the costs per label would be comparable to those for printing nutrition labels ($0.0025 to $0.05 per label if the information is included as part of their price label, and, $0.01 per label if they developed separate labels). FSIS requests comment on the costs and benefits of percent fat/percent lean labeling on ground or chopped products.

Benefits

The benefits of nutrition labeling depend on the extent to which consumers change their food consumption in favor of products that are more nutritious. As noted earlier, the absence of nutrition labeling to indicate nutrition contents of ground or chopped meat and poultry products and the major cuts of single-ingredient, raw products does not allow consumers to get adequate information for making their purchasing decisions. Provision of nutrition labels and point-of-purchase materials would disseminate nutrition information and enhance consumers' food purchasing decision-making process.

Consumption habits vary with knowledge of nutrition and health, preference for healthful diets, and socioeconomic status of different segments of the population. For example, consumers with preferences for healthful diets are likely to select products with lower fat and cholesterol levels to assist in the reduction of risk for coronary heart problems and cancerous diseases. Some consumers might perceive that a product is of higher quality or more nutritious if it has lower fat and cholesterol contents. Availability of nutrition labels on ground or chopped meat and poultry products and nutrition information for the major cuts of single-ingredient, raw products may help purchasing decision-making by these select groups of consumers.

Literature review of impact of labeling on diet quality. Nutrition labels on products such as cereals have existed for over two decades. Research studies on the effect of nutrition labeling on diet quality for these non-meat and poultry products indicate a positive relationship between these variables. Kreuter et al. (1997) analyzed survey data of 885 adult patients from four family medical clinics in Missouri (see the ''References'' section below for full citations of the literature referred to in this discussion). To participate, patients completed a self-administered survey while waiting to see their physicians. The results revealed that patients eating diets lower in fat were much more likely (51% versus 26%) than patients whose diets were higher in fat to report that nutrition labels influenced their food purchasing decisions.

Guthrie *et al.* (1995) linked USDA's 1989 Continuing Survey of Food Intakes by Individuals (one database) to Diet and Health Knowledge Survey (another database). They concluded that label use appeared to be associated with the consumption of diets that were higher in vitamin C and lower in cholesterol.

Neuhouser *et al.* (1999) analyzed data from a survey of 1,450 adult residents in Washington State. The survey assessed nutrition label use, fat-related diet habits, fruit and vegetable consumption, diet-related psychosocial factors, health behavior, and demographic characteristics. They concluded that label use was significantly associated with lower fat intake and, after controlling for all demographic, psychosocial, and behavioral variables, label use explained 6% of the variance in fat intake (their conclusion had a probability of 99.9%).

Mathios and Ippolito (1998) analyzed the effect of nutrition information in advertising and labels on consumption of food cereals with fiber content. They divided their study into two periods: First, the period, 1978–1984, when the FDA permitted printing of fiber content on cereal boxes but did not permit printing of any health claims, and the period 1985–87 when health claims were permitted. They concluded that in concert with an increase in fiber intake of cereals in their diets, the average intakes of fat, saturated fat, and cholesterol for both men and women declined during both the periods, albeit, the decline was greater during the second period relative to the first. They concluded that the increase in fiber and the decrease in fat and cholesterol consumption were associated with the consumption of labeled cereals.

Preliminary benefits analysis. FSIS consulted with ERS to develop the following empirical analysis of the benefits of nutrition labeling. The estimated benefits take the form of reductions in the incidence of coronary heart disease and three types of cancer which may accrue as consumers improve their diet quality through increased use of nutrition information generated by the regulation. FSIS used survey data on nutrient intake and label use to correlate intake of fat, saturated fat, and cholesterol to usage of existing nutrition information. The Agency estimated the value of the potential changes from intake of fat, saturated fat,

and cholesterol that could occur as consumers respond to the newly available nutrition information. FSIS applied the model developed by Zarkin, et. al. which links changes in the serum cholesterol rate to changes in the percentage of total calories from polyunsaturated fat, saturated fat, and dietary cholesterol (Gary A. Zarkin, Nancy Dean, Josephine A. Mauskopf, and Richard Williams, ''Potential Health Benefits of Nutrition Label Changes,'' *American Journal of Public Health* 83(5) (May 1993): 717–724; Gary A. Zarkin, Nancy Dean, Josephine A. Mauskopf, and Dierdre M. Neighbors, ''Estimated Benefits of Nutrition Label Changes: Final Report, Volume 1,'' Center for Economics Research, Research Triangle Institute, Research Triangle Park, NC, 27709. April 1991). Changes in serum cholesterol are then used to estimate the health outcomes, which are reductions in the number of cases and mortality from three cancers (breast, colorectal, and prostate) and coronary heart disease. Finally, the Agency attached economic value to the public health changes by estimating the implied value of life associated with reductions in premature mortality.

To determine how much of a behavioral response and change in dietary intake may result from providing more nutrition information on meat and poultry products, FSIS makes the following assumption: The Agency assumes that when labels and other sources of nutrition information are provided for raw meat and poultry products that nutrition information usage rates will rise to match label usage rates for food products as a whole (see Table 3). Currently, some nutrition information is provided for some single-ingredient, raw meat and poultry products, but the information is not currently required. Mandatory nutrition labeling rules for the major cuts of single-ingredient, raw products and ground or chopped products would mean the nutrition information provided for these products would be comparable to that provided for other food products. FSIS therefore could reasonably assume that nutrition information usage rates for raw meat and poultry products would then become the same as the label usage rates for all foods taken together. For example, before mandatory nutrition information labeling, the data show that about 17 percent of men look for nutrition information on meat ''Often'' (Row 2 of table 3). In this analysis, then, FSIS assumed that after mandatory nutrition information labeling, 26.7 percent of men would use the nutrition fact panel or point-of-purchase materials for meat products, which is the label usage rate for all foods (Row 1 of table 3). Similarly, the Agency assumes that the percentage of women using nutrition information on meat products ''Sometimes'' would rise from 18 percent to 32.6 percent.

What does this mean for diet quality? Here, FSIS made another (admittedly strong) assumption: The Agency assumed that as nutrition information usage rates rise for consumers eating meat and poultry, dietary patterns will change in a manner consistent with current data. As shown above, there is strong statistical evidence that people who use nutrition information to guide their food consumption decisions have healthier diets. While other factors may be at work, and the role of information use in causing dietary changes is unclear, FSIS makes the assumption that the provision of additional nutrition information and making that information available to more consumers will lead to behavioral shifts and increased diet quality. Thus, FSIS assumes the effect of providing new information for meat and poultry products would make consumers who NEVER used nutrition information for meat and poultry products become aware of the diet implications of their choices in meat and poultry products. These consumers would then choose to consume the same mix of products as people who are currently aware of the nutritional quality of meat and poultry products. For example, men who currently do not look for nutrition information on meat in the absence of mandatory nutrition information labeling who would begin using this information ''Sometimes'' after labeling is in place would see a decrease in fat intake from 98 grams to 92.5 grams.

Under these assumptions, then, FSIS could see how requirements for mandatory nutrition information labeling on raw meat and poultry products could possibly affect diet quality. To reach the values shown in table 6, FSIS multiplied each cell in table 5 by the associated percentage of label use (nutrition facts panel use) from table 3. By doing this, FSIS increased the numbers of people in the ''always'' and ''sometimes'' cells, and decreased the number of people in the ''rarely'' and ''never'' cells, so that the distribution of label usage on meat and poultry products would reflect the distribution of label usage on all products. Aggregating across categories, FSIS got a new weighted average intake, which could be seen after the imposition of mandatory labeling requirements.

TABLE 9.—CHANGE IN INTAKE DUE TO INCREASED LABEL USAGE

	Intake prior to mandatory nutrition labeling of meat & poultry	After adjusting for increased label usage	Percentage decrease in intake
Men:			
Total Fat	92.51	91.31	1.30
Saturated Fat	31.12	30.69	1.37
Cholesterol	339.07	334.95	1.21
Women:			
Total Fat	60.16	58.57	2.65
Saturated Fat	19.71	19.21	2.55
Cholesterol	210.53	208.16	1.13

Note: Fat intake in grams, cholesterol in milligrams.

TABLE 10.—CHANGE IN PERCENTAGE OF CALORIES FROM FAT AND CHOLESTEROL INTAKE DUE TO INCREASED LABEL USAGE

	Intake prior to mandatory nutrition labeling of meat & poultry	After adjusting for increased label usage	Percentage decrease in calories from fat or intake
Men:			
Total Fat	33.44	33.33	0.11
Saturated Fat	11.19	11.14	0.04
Cholesterol	339.07	334.95	4.12
Women:			
Total Fat	32.49	32.37	0.11
Saturated Fat	10.64	10.54	0.10
Cholesterol	210.53	208.16	2.37

Note: Fat and saturated fat values are percent calories from fat. Cholesterol is mg.

Evaluation of health effects. Based on epidemiological research, FSIS related the reductions estimated in Table 10 to estimated decrease in incidence of major diseases associated with consumption of fat and cholesterol. The diseases considered in this analysis include three types of cancer—breast, prostate, and colon/rectal—and coronary heart disease. Epidemiological studies of the relationships between dietary fat and cholesterol intake and incidence of cancer and coronary heart disease indicate that saturated and polyunsaturated fat and cholesterol are converted into serum cholesterol. Serum cholesterol has an impact on the incidence rates of these diseases. FSIS used the following equation from Zarkin *et al.* (1993) to convert fat contents into the change in serum cholesterol (SC) rate, in milligram/deciliter (mg/dl):

(1) SC (Mg/dl) = 2.16S - 1.65P + 0.097C

Where SC is serum cholesterol, S is the change in percentage of total calories represented by saturated fat, P is the change in percentage of total calories represented by polyunsaturated fat, and C is the change in dietary cholesterol measured in mg/1000 calories.

FSIS substituted the estimated values of percentage changes in saturated fat and cholesterol intake from the last column of Table 10 into this equation. Since FSIS did not have separate data for polyunsaturated (P) fat, it was assumed that P would be one-third of total fats, as was also assumed by Zarkin *et al.* The estimates of serum cholesterol for male and female consumers are as follows:

TABLE 11.—REDUCTION IN SERUM CHOLESTEROL AND CHANGE IN MORTALITY

	% Change in calories from total fat	% Change in calories from sat. fat	Change in cholesterol intake	Change in serum cholesterol	% Reduction in mortality
Men	0.11	0.04	4.12	0.399	0.0240
Women	0.11	0.10	2.37	0.231	0.0139

FSIS used the calculated values of SC presented above to estimate incidence of breast, prostate, colon/rectal cancer, and coronary heart disease. Zarkin *et al.* (1993) concluded that an increase in serum cholesterol by 20 mg/dl was associated with a 1.2-percent increase in the incidence of each of these diseases. FSIS employed this rate to convert reductions in total fat, saturated fat, and cholesterol in Table 10 into SC. It is estimated that the reduction in mortality associated with changing dietary pattern from mandatory nutrition information labeling are 0.024 percent for men, and about 0.014 percent for women.

TABLE 12.—REDUCTION IN MORTALITY, ANNUAL NEW CASES OF MORTALITY, AND ESTIMATED LIVES SAVED

	Reduction in mortality (%)		Annual new cases of mortality		Lives saved		
	1	2	3	4	5	6	7
	Men	Women	Men	Women	Men	Women	Total
Breast Cancer	.....	0.0139	.....	41,200	0	6	6
Prostate Cancer	0.0240	.....	31,900	.....	8	0	8
Colorectal Cancer	0.0240	0.0139	28,000	28,000	7	4	11
Coronary Heart Disease	0.0240	0.0139	231,332	228,769	55	32	87

Table 12 presents data on the annual new cases of mortality associated with the three types of cancer and coronary heart disease for men and women in the United States in 1998. Data for the number of deaths came from the National Center for Health Statistics (coronary heart disease) and the American Cancer Society (cancer). Data on colorectal cancer were not available by gender; FSIS assumed the estimated 56,000 cases were distributed equally between men and women.

Estimating the benefits of preventing premature death. The benefits of the

proposed nutrition information labeling rule would be the lives saved due to the estimated reductions in mortality rates associated with these diseases. However, placing reduction of the risk of premature death in an economic context is difficult and controversial (for an in-depth analysis of this issue, see Fred Kuchler and Elise Golan, ''Assigning Value to Life: Comparing Methods for Valuing Health Risks,'' Agricultural Economic Report No. 784, U.S. Dept. Agric., Econ. Res. Service, Washington, DC, Nov. 1999). The problem is that there is no market for reducing diet-related fatal risks. If food were marketed by risk levels (say, probabilities of inducing cancer or heart disease) and consumers treated advertised risk levels like they do other objectively measurable product characteristics (e.g., weight or volume), there would be little difficulty in valuing food safety. Product prices could be statistically associated with risk levels, yielding the risk-dollar trade-off consumers make. That is, FSIS could measure, based on consumer purchases, the dollar value consumers attach to particular types of risk reduction.

There is no price that can be tabulated from commercial transactions that reflects the value of reducing diet-related fatal risks. Actions that individuals might take to reduce these risks do not leave a behavioral trail for analysts to follow. This information void makes it difficult to evaluate programs that might reduce diet-related risks. In particular, there is no obvious dollar value to assign to the major benefit of such programs, namely lives saved.

Ultimately, FSIS wanted to monetize the benefits of diet-related fatal health risk reduction. Other risks do leave a clear behavioral trail that analysts have followed, measuring the risk-dollar trade-off individuals make. The Agency's goal was to find a method of transferring market-based risk-dollar trade-off estimates to diet-related fatal cancer risks.

The most studied risk choices are those for on-the-job risks of accidental injury and death. Analysts have estimated the compensation required to induce workers to accept such risks. Many studies of labor market behavior have been carried out because the wide range of risk levels workers accept and the wide range of wages paid are amenable to statistical analysis. Available evidence suggests that workers' subjective assessments of risks they face are plausible (W.K. Viscusi, *Fatal Tradeoffs—Public & Private Responsibilities for Risk.* New York: Oxford University Press, 1992).

Viscusi (1992) summarized the empirical work estimating the value of risk of premature death. Several studies estimate the risk-dollar trade-off in the labor market by dividing the wage premium for risky jobs by the risk of a fatal job injury. Drawing on the compiled results of these studies, he stated: ''Although the estimates of the risk-dollar tradeoff vary considerably depending on the population exposed to the risk, the nature of the risk, and similar factors, most of the reasonable estimates of the value of life are clustered in the $3 to $7 million range'' (p. 73). Thus, compensating wages indicate that, on average, industrial workers value a statistical life at $5 million (December 1990 dollars), the midpoint of the range. ERS currently uses the $5 million per life estimate (adjusted upwards for inflation to 2000 dollars) to measure the benefits of preventing premature death from foodborne diseases caused by microbial pathogens (such as *E. coli* O157:H7, *Salmonella,* and *Listeria monocytogenes.*) (Crutchfield, Roberts, Buzby, and Frenzen, '' Food Safety Efforts Accelerate in the 1990's,'' *Food Review,* 23 (3), September-December 2001, forthcoming). This estimate has been used by other government agencies to evaluate the benefits of regulations designed to reduce the risk of premature death. For example, The Food and Drug Administration (Procedures for the Safe and Sanitary Processing and Importing of Fish and Fishery Products Final Rule, 60 FR 65095) and the Consumer Product Safety Commission (Miller et al., ''The Consumer Product Safety Commission's Revised Injury Cost Model,'' *Peer Review Draft Prepared for the U.S. Consumer Product Safety Commission,* July 1, 1997) currently use Viscusi's mid-point value of $5 million for each life saved. (Kuchler and Golan, ''Assigning Value to Life: Comparing Methods for Valuing Health Risks,'' *Agricultural Economic Report No. 784,* U.S. Department of Agriculture, Economic Research Service, Washington, DC, November 1999, page 25). However, other agencies use lower life values in their analyses. FSIS requests comments on whether $5 million is an appropriate value of life estimate.

FSIS used the $5 million estimate as reflecting willingness to pay to avoid health risks. This is not the value an individual would pay to save his own life, but the aggregate value paid by many individuals to reduce a small risk of death each faces. To make this transfer, FSIS assumed that individuals make consistent risk choices, reducing health risks as much as their budgets allow. The Agency assumed individuals focus on the likelihood of health outcomes and how bad the outcomes might be, without regard to the different physical characteristics of hazards that give rise to health risks. The assumption critical for making the transfer from valuing job risks to valuing cancer risks is that individuals value years of life, and all years are equally valuable. All individuals are assumed to value a year of life equally.

FSIS adjusted for differences between years of life lost to cancer and heart disease fatalities and years of life lost to workplace fatalities. The value of statistical life estimate is based on a worker anticipating a fatal injury and losing an average life expectancy of 36.5 years (W.K. Viscusi, W.K. *Cigarette taxation and social consequences of smoking.* In James M. Poterba (ed.), *Tax Policy and the Economy.* Volume 9. Cambridge: MIT Press for the National Bureau of Economic Research, 1995). Potential life years lost to cancer and heart disease deaths were calculated by FSIS using data from National Centers for Health Statistics (National Center for Health Statistics, *National Vital Statistics Report* 48 (11) (July 24, 2000): 167). NCHS reports the number of years lost before age 75 per 100,000 population under the age of 75. These data were divided by the number of cancer and heart disease deaths for the population under 75 years of age to estimate the average number of life years lost up to age 75. The average number of life years lost were 14.9 for breast cancer, 3.9 for prostate cancer, 9.56 for colorectal cancer, and 10.2 for coronary heart disease. Thus, to calculate a value of life lost to cancer or heart disease, FSIS adjusted the $5 million estimate downward to reflect the fewer years of life lost to cancer or heart disease, compared to work-related deaths. This calculation is similar to that carried out by Viscusi for estimating the value of statistical lives lost to environmental tobacco smoke (Viscusi, 1995).

FSIS treated the last 36.5 years of life ($L_{36.5}$) as a capital asset with a current value of $5 million. If the risk market could be characterized as an efficient market, the asset price should be equal to the present value of the service flow the asset produces.

$$L_{36.5} = \$5 \text{ million} = \int_0^{36.5} Re^{-rt} dt$$

R is the (assumed) constant annual value of life and *r* is the time preference

rate used to discount future benefits. Consider now the case of an individual facing an expected loss of 10.2 years of life from coronary heart disease. From this perspective, the value of the last 10.2 years of life for a victim of coronary heart disease is

$$L_{10.2} = e^{-26.3r} r^{-1} R(1 - e^{-10.2r}).$$

The equations for both $L_{36.5}$ and $L_{10.2}$ can be solved for R and equated, yielding

$$L_{10.2} = L_{36.5}\, e^{-26.3r}(1 - e^{-36.5r})^{-1}.$$

The value of cancer avoidance depends on an individual's rate at which future years of life are discounted. At an interest rate of 7 percent, the value is $636,755. At an interest rate of 3 percent, the value is $1,056,261.

This estimate is in December, 1990 dollars. Using the CPI–U to update this estimate from 1990 to 2000 dollars (CPI–U = 133.8 in December 1990, and 171.3 average for 2000), the value becomes $815,218 (7 percent discount rate) and $1,352,298 (3 percent) in 2000 dollars. Similar calculations were made for deaths associated with the other three diseases considered (which take into account the different number of life years lost for each disease). The results are reported in Tables 13 and 14. To arrive at an estimate of the benefits associated with reductions in mortality due to changes in fat and cholesterol intake, FSIS multiplied the dollar value assigned to each premature death prevented by the number of lives saved due to changes in diet quality. This estimate is reported for each disease as ''Total benefits per year'' in Tables 13 and 14. The total for all diseases is $86.6 million dollars at a 7 percent discount rate and $145.2 million at 3 percent.

It should be noted that the calculations used to estimate present value explicitly account for the time factor associated with delayed health impacts of dietary change. Decreases in intake of saturated fat, fat, and cholesterol will reduce the incidence of heart disease and cancer, but not immediately—the reductions in illness and death will begin to occur years into the future. However, the formulas used for calculating the present value of the benefits explicitly take this into account, for they reflect the value placed on lost years of life occurring in the future.

TABLE. 13—ESTIMATED LIVES SAVED AND ASSOCIATED ECONOMIC BENEFITS, USING A 7 PERCENT DISCOUNT RATE

	Breast cancer	Prostate cancer	Colorectal cancer	Coronary heart disease	All diseases
Deaths Per Year	41,200	31,900	28,028	228,231	329,359
Lives Saved Due to Dietary Changes from Labeling	6	8	11	87	111
Years of Life Lost Per Premature Death	14.9	3.9	9.6	10.2	N/A
Dollar Value of 1 Life Saved ($)	1,032,665	384,390	780,670	815,218	N/A
Total Benefits Per Year ($)	5,906,020	1,513,329	8,273,399	70,936,607	86,629,355
20 Year Present Value ($)	62,568,456	16,032,277	87,648,507	751,503,430	917,752,620

NOTE: Cancer deaths are for 2000, heart disease deaths are for 1998. Number of lives saved is rounded to the nearest integer. All benefits estimates are in year 2000 dollars.

TABLE. 14—ESTIMATED LIVES SAVED AND ASSOCIATED ECONOMIC BENEFITS, USING A 3 PERCENT DISCOUNT RATE

	Breast cancer	Prostate cancer	Colorectal cancer	Coronary heart disease	All diseases
Deaths Per Year (1998)	41,200	31,900	28,028	228,231	329,359
Lives Saved	6	8	11	87	111
Years of Life Lost Per Death	14.9	3.9	10.6	10.2	N/A
Dollar Value of 1 Life Saved ($)	1,844,723	570,731	1,395,308	1,352,298	N/A
Total Benefits Per Year ($)	10,550,343	2,246,945	14,787,213	117,670,918	145,255,419
20 Year Present Value ($)	156,962,464	33,428,870	219,996,395	1,750,646,120	2,161,033,850

NOTE: Cancer deaths are for 2000, heart disease deaths are for 1998. Number of lives saved is rounded to the nearest integer. All benefits are in year 2000 dollars.

It should be kept in mind that these estimates are based on annual data, and represent only one year's benefits. FSIS assumed that the reduction in mortality would continue each year. Using a twenty-year time horizon, FSIS estimated the present value (discounted at seven percent and three percent) of continuing reduction in premature deaths. This estimate was $918 million for all diseases at 7 percent, and $2.161 billion at 3 percent. FSIS requests comment on the benefits analysis above.

Summary of costs and benefits of the proposed nutrition labeling rule. As discussed above, FSIS' preliminary analysis does not allow for a comparison of the net benefits among the regulatory options considered.

For the proposed rule, the present values of benefits estimated in the two scenarios with 7 and 3 percent discount rates, respectively, range from $918 million to $2.161 billion. The present value (at a 7 percent discount rate for 20 years) of annualized fixed costs, operating and paperwork burden costs (including paperwork costs for providing nutrition information for the major cuts) for the lower bound estimate amounts to $659.69 million. In case the higher estimate of fixed costs is used, the fixed, the operating, and the paperwork burden costs amount to $927.05 million, at a 7 percent discount rate for 20 years.

Percentage labeling. This proposed rule would allow but would not require a statement of the fat and lean percentage in ground or chopped products. FSIS believes that this nutrition information helps consumers make better food choices and provides incentives to producers to continue producing nutritionally-improved products which contribute substantially to the health benefits associated with nutrition labeling. However, FSIS does not have the data necessary to quantify these benefits. FSIS requests comments concerning the benefits of percentage labeling on ground or chopped products.

Regulatory Flexibility Act (RFA)—Preliminary Analysis

Based on the cost analysis above, FSIS has made an initial determination that this rule will not have a significant economic impact on a substantial number of small entities, as defined by the Regulatory Flexibility Act (5 U.S.C 601). In the cost analysis above, FSIS estimated that the total costs for required nutrition labels on ground or chopped products would be between 1.5 and 2 pennies per pound. Also, as stated above, FSIS believes that the cost of providing nutrition labeling for the major cuts of single-ingredient, raw meat products should be negligible. FSIS estimates the total one-time costs to all retail establishments combined for obtaining point-of-purchase materials that include nutrition information for the major cuts of single-ingredient, raw products will be about $0.7 million.

The data in Table 1 in the ''Baseline'' section above suggest that about one-half of the poultry plants were large (28 out of 63) in 1999. The number of ''small'' and ''very small'' poultry plants was 23 and 10 respectively. In the absence of the availability of any data on production levels of these plants, FSIS assumes that the very small plants with less than ten employees are likely to produce less than 100,000 pounds per ground poultry product. This assumption is not unrealistic because poultry grinding is a labor-intensive process and less than ten employees are not likely to produce more than 100,000 pounds per ground product because these employees also process other products in these plants. Based on this assumption, 10 very small poultry establishments (or only 15% of all poultry establishments) are likely to be exempt from nutrition labeling requirements for ground or chopped products. However, these establishments would not be exempt if they are owned by a large corporation that owns several plants and employs 500 or more workers among all of its plants or produces more than 100,000 pounds of a particular ground product in total among all of its plants. FSIS did not have data linking these establishments to their corporate ownership.

The EFD indicates that most of the ground meat producing plants are very small. For example, of the 2,426 ground meat establishments, 1470 or 60% are very small. The number of small and large ground meat establishments are 843 and 68, respectively. Therefore, assuming that the very small establishments produce less than 100,000 pounds of a particular ground meat product, 60% of all these plants would be exempt from nutrition labeling requirements for ground or chopped products. In practice, the number of plants that would be exempt may be smaller than 60 percent because many of these plants may be owned by large, multi-plant corporations. However, FSIS does not have data on corporations that own these individual establishments.

As discussed above, FSIS believes that a significant amount of ground beef is processed at retail. Table 2 in the ''Baseline'' section above shows the number of retail stores in 1999. Most of these stores grind beef. However, FSIS does not have specific data concerning the levels of ground beef ground at retail or on the size of retail stores that process ground beef. FSIS researched Census data for this information, but specific information related to retail establishments processing ground or chopped product was unavailable. Therefore, FSIS does not currently have all the data necessary for a comprehensive analysis on the effects of this rule on small entities. In addition to the lack of data on retail stores producing ground or chopped product, FSIS does not have data on the specific types and quantities of ground products produced in individual plants to determine the number of single-plant facilities or multi-plant companies or firms that would be exempt from this regulation. Therefore, FSIS is requesting this information and inviting comments concerning potential effects. In particular, FSIS is interested in determining the number and kind of small entities that may incur benefits or costs from implementation of this proposed rule.

FSIS will make available a list of published sources of information so that industry can obtain literature from local libraries. This information will assist in the development of nutrition labels for ground or chopped products. This list of published sources of information should also help minimize the economic effect of this rule on small entities.

FSIS is cognizant of the possibility that while the exempted establishments would not have to incur labeling costs, they might not realize benefits of greater sales of the labeled products, in case they choose not to nutritionally label their products. This is because if demand for the labeled product increases relative to demand for non-labeled products, the exempt establishments would lose their market shares to the nonexempt establishments producing nutritionally labeled products. Therefore, to keep their market shares, these exempt establishments are likely to voluntarily include nutrition information on the product label. Such a strategy would minimize the adverse impact on these smaller establishments. It would, however, also increase their costs associated with labeling. Economic theory dictates that these establishments would compare the costs of nutrition labels with the benefits of retaining their market shares and would decide to label their products if the benefits of increasing the market shares exceed the label costs.

Nutrition labeling would be required, either on the product label or on point-of-purchase materials, for the major cuts of single-ingredient, raw product. Therefore, if manufacturers do not provide nutrition information on the label, retailers would be required to provide this information at the point-of-purchase or on product labels. However, as noted above, this requirement should not impose major costs or other burdens because many stores are currently providing nutrition information for these products, point-of-purchase materials are available for a nominal fee through FMI's web site ($12.00 for members, $24.00 for nonmembers), and FSIS intends to make point-of-purchase materials available, free of charge, on the FSIS web site.

The economic impact on retail stores is likely to be minimal because recently there has been considerable consolidation of these stores due to mergers and acquisitions resulting in an increased market share of large retailers relative to small ones. For example, recently Royal Ahold, the Dutch Conglomerate, bought out Giant Food. Earlier last year, Ahold also announced the pending purchase of Supermarket General-II Holdings Corporation, parent of the Pathmark chain. Similarly, SUPERVALUE acquired Richfood, Food Lion bought out Hannaford Brothers, and Scarborough, and Albertson's purchased American Stores. (Sean Mehegan, ''Consolidation Changes the Face of the North American Supermarket Sector,'' *Meat & Poultry* (September 1999): 22–25). These mergers and acquisitions are likely to increase market shares of the large retailers at the cost of smaller ones.

Table 2 in the ''Baseline'' section above shows the number of retail grocery stores in 1999. The economic impact of the first-year costs of compliance on the processors and the retailers is determined by dividing the total first-year costs by the number of processors or retailers. Table 8 revealed the range of first-year costs to processors for labeling ground or chopped products at $10.3 million to 20.3 million. These

costs include the fixed costs, operating costs, and the paperwork burden costs. Since the number of processors is 2,489 (see Table 1), the impact per processor would range from $4,138.21 ($10.3 million/2,489) to $8,155.89 ($20.3 million/2,489). Similarly, Table 8 also shows that the first-year costs to retailers for labeling ground or chopped products range from $ 49.90 million($28.8 + $12.6 million + $8.5 million) to $ 64.3 million ($43.2 million + $12.6 million +$8.5 million). In addition, as explained above, the total paperwork burden costs to retailers for providing point-of-purchase materials for the major cuts of single-ingredient, raw products is approximately $0.7 million. Thus, the total costs to retailers would range from $50.6 million to $65 million. Since the number of retail stores (see Table 2) in 1999 was 69,500 (excluding convenience stores that do not normally sell meat products), the impact per retail store would range from $728.06 ($50.6 million/69,500) to $935.25 ($65 million/69,500). Therefore, the impact of the first-year cost would be greater on the processors relative to retailers.

Executive Order 12988

This proposed rule has been reviewed under Executive Order 12988, Civil Justice Reform. States and local jurisdictions are preempted by the Federal Meat Inspection Act (FMIA) and the Poultry Products Inspection Act (PPIA) from imposing any marking, labeling, packaging, or ingredient requirements on federally inspected meat and poultry products that are in addition to, or different than, those imposed under the FMIA or the PPIA. However, States and local jurisdictions may exercise concurrent jurisdiction over meat and poultry products that are outside official establishments for the purpose of preventing the distribution of meat and poultry products that are misbranded or adulterated under the FMIA or PPIA, or, in the case of imported articles, which are not at such an establishment, after their entry into the United States.

The proposed rule is not intended to have retroactive effect.

If this proposed rule is adopted, administrative proceedings will not be required before parties may file suit in court challenging this rule. However, the administrative procedures specified in §§ 306.5 and 381.35 must be exhausted before there is any judicial challenge of the application of the proposed rule, if the challenge involves any decision of an FSIS employee relating to inspection services provided under FMIA and PPIA.

Public Notification and Request for Data

FSIS requests information regarding the impact of this proposed rule on minorities, women, and persons with disabilities, including information on the number of minority-owned meat and poultry establishments, the makeup of establishment workforces, and the communities served by official establishments.

Public involvement in all segments of rulemaking and policy development are important. Consequently, in an effort to better ensure that minorities, women, and persons with disabilities are aware of this proposed rule and are informed about the mechanism for providing their comments, FSIS will announce it and provide copies of this **Federal Register** publication in the FSIS Constituent Update. FSIS provides a weekly FSIS Constituent Update, which is communicated via fax to over 300 organizations and individuals. In addition, the update is available on line through the FSIS web page located at http://www.fsis.usda.gov. The update is used to provide information regarding FSIS policies, procedures, regulations, **Federal Register** notices, FSIS public meetings, recalls, and any other types of information that could affect or would be of interest to our constituents/stakeholders. The constituent fax list consists of industry, trade, and farm groups, consumer interest groups, allied health professionals, scientific professionals, and other individuals that have requested to be included. Through these various channels, FSIS is able to provide information to a much broader, more diverse audience. For more information and to be added to the constituent fax list, fax your request to the Congressional and Public Affairs Office, at (202) 720–5704.

Paperwork Requirements

Title: Nutrition labeling of ground or chopped meat and poultry products and single-ingredient products.

Type of Collection: New.

Abstract: FSIS has reviewed the paperwork and record keeping requirements in this proposed rule in accordance with the Paperwork Reduction Act. Under this proposed rule, FSIS is requiring several information collection and recordkeeping activities. FSIS is proposing to require nutrition labeling on the major cuts of single-ingredient, raw meat and poultry products, either on their label or at their point-of-purchase, unless an exemption applies. If the manufacturer provides nutrition information on the label of individual packages of the major cuts of single-ingredient, raw meat or poultry products, the retailer would not be required to provide the information at the point-of-purchase. However, if the manufacturer does not provide the nutrition information on the label of these products, the retailer would be required to provide the information at their point-of-purchase. In the estimate of burden below, FSIS is estimating that all retailers would display point-of-purchase information for the major cuts of single-ingredient, raw meat and poultry products, because this is an inexpensive means of providing nutrition information for multiple products and because this rule will not require that manufacturers include nutrition labels on the major cuts of single-ingredient, raw meat and poultry products. FSIS is also proposing to require nutrition labels on all ground or chopped meat and poultry products, with or without added seasonings, unless an exemption applies.

Estimate of burden: FSIS estimates that obtaining point-of-purchase materials and making them available for consumers would take an average of 30 minutes. FSIS believes that the nutrition information on most point-of-purchase materials will be based on the most current representative database values contained in USDA's National Nutrient Data Bank or the USDA Nutrient Database for Standard Reference. FSIS also believes it is unlikely that there will be any nutrition claims made on the point-of-purchase materials on the basis of the representative data base values. Therefore, these products will not be subject to FSIS compliance review, and there will be no recordkeeping requirements based on this information.

FSIS estimates that developing nutrition labels for ground or chopped products would take an average of 120 minutes. Labels developed at official establishments would be submitted to FSIS. FSIS estimates that each official establishment that produces ground or chopped product would submit three labels to FSIS for approval. FSIS estimates that it would take an average of 15 minutes to prepare and submit the form for prior approval. All ground or chopped product would be subject to FSIS compliance review; therefore, producers of ground or chopped product would be required to maintain records to support the validity of nutrient declarations contained on product labels. FSIS estimates the average time for recordkeeping would be 5 minutes.

Respondents: Meat and poultry establishments and retail stores.

Estimated number of respondents: 71,989.

Estimated number of responses per respondent: 3.

Estimated total annual burden on respondents: 474,549.

Copies of this information collection assessment can be obtained from Lee Puricelli, Paperwork Specialist, Food Safety and Inspection Service, USDA, 112 Annex, 300 12th St., Washington, DC 20250.

Comments are invited on: (a) Whether the proposed collection of information is necessary for the proper performance of the functions of the Agency, including whether the information will have practical utility; (b) the accuracy of the Agency's estimate of the burden of the proposed collection of information including the validity of the methodology and assumptions used; (c) ways to enhance the quality, utility, and clarity of the information to be collected; and (d) ways to minimize the burden of the collection of information on those who are to respond, including through the use of appropriate automated, electronic, mechanical, or other technological collection techniques or other forms of information technology.

Comments may be sent to Lee Puricelli, see address above, and the Desk Officer for Agriculture, Office of Information and Regulatory Affairs, Office of Management and Budget, Washington, DC 20253. Comments are requested by February 20, 2001. To be most effective, comments should be sent to OMB within 30 days of the publication date.

References

American Cancer Society. ''2000 Facts and Figures: Selected Cancers.'' http://www.cancer.org/statistics/cff2000/selectedcancers.html

The American Meat Institute Foundation. *Relative Ground Beef Contribution to the United States Beef Supply.* May 1996.

National Center for Health Statistics: *Health, United States, 2000.* U.S. Department of Health and Human Services, Centers for Disease Control and Prevention, Division of Data Services, Hyattsville, MD, 2000.

National Center for Health Statistics: *National Vital Statistics Report.* Vol. 48, No. 11, July 24, 2000. U.S. Department of Health and Human Services, Centers for Disease Control and Prevention, Division of Data Services, Hyattsville, MD.

Retail Diagnostics, Inc. U.S. Department of Agriculture Nutrition Labeling and Safe Handling Information Study: December 1996, final report, March 19, 1997.

Retail Diagnostics, Inc. U.S. Department of Agriculture Nutrition Labeling and Safe Handling Information Study: October 1999, draft report, December 10, 1999.

Campbell, Robert. ''Ground Beef Testing: Determining Fat Content and Distribution,'' *Meat and Poultry,* October, 1997.

Crutchfield, S.R., T.A. Roberts, P.D. Frenzen, and J.C. Buzby. ''Food Safety Efforts Accelerate in the 1990's'' *Food Review,* Vol. 23, No. 3, September-December 2000, forthcoming.

Field, R.A. ''Bone Marrow Measurements for Mechanically Recovered Products from Machines that Press Bones,'' *Meat Science,* Vol. 51. 2000.

Guthrie, J.F., J.J. Fox, L.E. Cleveland, and S. Welsh. ''Who Uses Nutrition Labeling, and What Effects Does Label Use Have on Diet Quality,'' *Research Article, Society for Nutrition Education,* 1995, 163–172.

Kim, Sung-Yong, Rodolfo M. Nagaya, Jr., and Oral Capps, Jr. ''The Effect of Food Label Use on Nutrient Intakes: An Endogenous Switching Regression Analysis.'' *Journal of Agricultural and Resource Economics,* Vol. 25, No. 1, pp. 215–231. 2000.

Kreuter, M.W., L.K. Brennan, D.P. Schrff, and S.N. Lukwago, ''Do Nutrition Label Readers Eat Healthier Diets? Behavioral Correlates of Adults' Use of Food Labels,'' *American Journal of Preventive Medicine,* Vol. 13, No. 4, 1997, 277–283.

Kuchler, Fred, and Elise Golan. ''Assigning Value to Life: Comparing Methods for Valuing Health Risks.'' Agricultural Economic Report No. 784, U.S. Dept. Agric., Econ. Res. Service, Washington, DC, Nov. 1999.

Liebman, Bonnie. ''Where's the Beef Labeling,'' *Nutrition Action Healthletter,* June 1999, 8–11.

Mathios, A.D. and P.M. Ippolito. ''Food Companies Spread Nutrition Information Through Advertising and Labels,'' *Food Review,* May-August, 1998, 38–43.

Mehegan, Sean, ''Merger Mania—Consolidation Changes the Face of the North American Supermarket Sector,'' *Meat & Poultry,* September 1999, 22–25.

Miller, T.R., B.A. Lawrence, A.M. Jensen, G.M. Waehrer, R.S. Spicer, D.C. Lestina, and M.A. Cohen. ''The Consumer Product Safety Commission's Revised Injury Cost Model,'' *Peer Review Draft Prepared for the U.S. Consumer Product Safety Commission,* July 1, 1997.

Neuhouser, M.L, A.R. Kristal, and R.E. Patterson. ''Use of Food Nutrition Labels is Associated with Lower Fat Intake,'' *Journal of the American Dietetic Association,* Vol. 99, No. 45, 1999, 45–53.

Viscusi, W.K. 1992. *Fatal Tradeoffs—Public & Private Responsibilities for Risk.* Oxford University Press. New York.

Viscusi, W.K. 1995. Cigarette taxation and social consequences of smoking. In James M. Poterba (ed.), *Tax Policy and the Economy.* Volume 9. MIT Press for the National Bureau of Economic Research. Cambridge.

Zarkin, Gary A., Nancy Dean, Josephine Mauskopf, and Richard Williams, ''Potential Health Benefits of Nutrition Label Changes,'' *American Journal of Public Health,* 83(5) May 1993: 717–724.

Zarkin, Gary, Nancy Dean, Josephine A. Mauskopf, and Dierdre M. Neighbors, ''Estimated Benefits of Nutrition Label Changes: Final Report, Volume 1.'' Center for Economics Research, Research Triangle Institute, Research Triangle Park, NC 27709. April 1991.

List of Subjects

9 CFR Part 317

Food labeling, Food packaging, Meat Inspection, Nutrition, Reporting and recordkeeping requirements.

9 CFR Part 381

Food labeling, Food packaging, Nutrition, Poultry and poultry products, Reporting and recordkeeping requirements.

For the reasons discussed in the preamble, FSIS is proposing to amend 9 CFR Chapter III, as follows:

PART 317—LABELING, MARKING DEVICES AND CONTAINERS

1. The authority citation for part 317 would continue to read as follows:

Authority: 21 U.S.C 601–695; 7 CFR 2.18, 2.53.

2. Section 317.300 would be revised to read as follows:

§ 317.300 Nutrition labeling of meat and meat food products.

(a) Unless the product is exempted under § 317.400, nutrition labeling must be provided for all meat and meat food products intended for human consumption and offered for sale, except single-ingredient, raw products that are not ground or chopped products described in § 317.301 and are not major cuts of single-ingredient, raw meat products identified in § 317.344. Nutrition labeling must be provided for the major cuts of single-ingredient, raw meat products identified in § 317.344, either in accordance with the provisions of § 317.309 for nutrition labels, or in accordance with the provisions of § 317.345 for point-of-purchase materials, except as exempted under § 317.400. For all other products for which nutrition labeling is required, including ground or chopped meat products described in § 317.301, nutrition labeling must be provided in accordance with the provisions of § 317.309, except as exempted under § 317.400.

(b) Nutrition labeling may be provided for single-ingredient, raw meat products that are not ground or chopped meat products described in § 317.301 and that are not major cuts of single-ingredient, raw meat products identified in § 317.344, either in accordance with the provisions of § 317.309 for nutrition labels, or in accordance with the provisions of § 317.345 for point-of-purchase materials.

3. A new § 317.301 would be added to read as follows:

§ 317.301 Required nutrition labeling of ground or chopped meat products.

(a) Nutrition labels must be provided for all ground or chopped products (livestock species) and hamburger with or without added seasonings (including, but not limited to, ground beef, ground beef patties, ground sirloin, ground pork, and ground lamb) that are intended for human consumption and offered for sale, in accordance with the provisions of § 317.309, except as exempted under § 317.400.

4. Section 317.309 would be amended as follows:

a. In paragraph (b)(3), the first sentence would be amended by adding ''that are not ground or chopped meat products described in § 317.301'' after the phrase ''single-ingredient, raw products'', and by removing ''as set forth in § 317.345(a)(1)''; the second sentence would be revised by adding, ''that are not ground or chopped meat products described in § 317.301'' after the phrase ''single-ingredient, raw products'', and the following new sentence would be added after the first sentence:

* * * * *

(b) * * *

(3) * * * ''For single-ingredient, raw products that are not ground or chopped meat products described in § 317.301, if data are based on the product ''as consumed,'' the data must be presented in accordance with § 317.345(d). * * *

* * * * *

b. Paragraph (b)(10) would be amended by adding the following new sentence at the end of the paragraph:

* * * * *

(b) * * *

(10) * * * The declaration of the number of servings per container need not be included in nutrition labeling of single-ingredient, raw meat products that are not ground or chopped meat products described in § 317.301, including those that have been previously frozen.

* * * * *

c. Paragraph (b)(11) would be amended by adding the phrase ''single-ingredient, raw products that are not ground or chopped meat products described in § 317.301 and'' after ''exception of''.

d. Paragraph (d)(3)(ii) would be amended by removing the period and adding ''or on single-ingredient, raw meat products that are not ground or chopped meat products described in § 317.301.'' at the end of the paragraph.

e. Paragraph (e)(3) would be amended by adding '', but may be on the basis of ''as consumed'' for single-ingredient, raw meat products that are not ground or chopped meat products described in § 317.301,'' after ''as packaged''.

f. Paragraph (h)(9) would be amended by removing the phrase ''(including ground beef)'' products'', by adding, ''that are not ground or chopped meat products described in § 317.301'' after ''products'', by removing the phrase, ''its published form, the Agriculture Handbook No. 8 series available from the Government Printing Office'', and by adding, in its place, ''its released form, the USDA Nutrient Database for Standard Reference'', and by removing the period and adding the following at the end of the paragraph: '' as provided in § 317.345(e) and (f).''

5. Section 317.343 would be removed.

6. Section 317.344 would be amended by removing the phrases ''ground beef regular without added seasonings, ground beef about 17% fat,'' and ''ground pork.''

7. Section 317.345 would be amended as follows:

a. Paragraph (d) would be amended by removing ''should'' and adding, in its place, ''for products covered in paragraphs (a)(1) and (a)(2) must''.

b. Paragraph (e) would be amended by removing ''its published form, the Agriculture Handbook No. 8 series'' and by adding, in its place, ''its released form, the USDA Nutrient Database for Standard Reference'', and by removing ''(including ground beef)''.

c. Paragraph (f) would be amended by adding ''provided'' after ''nutrition information is''.

d. Paragraph (g) would be amended by removing the phrase ''(including ground beef)''.

e. The section heading and paragraphs (a) and (c) would be revised to read as follows:

§ 317.345 Nutrition labeling of single-ingredient, raw meat products that are not ground or chopped products described in § 317.301.

(a)(1) Nutrition information on the major cuts of single-ingredient, raw meat products identified in § 317.344, including those that have been previously frozen, is required, either on their label or at their point-of-purchase, unless exempted under § 317.400. If nutrition information is presented on the label, it must be provided in accordance with § 317.309. If nutrition information is presented at the point-of-purchase, it must be provided in accordance with the provisions of this section.

(2) Nutrition information on single-ingredient, raw meat products that are not ground or chopped meat products described in § 317.301 and are not major cuts of single-ingredient, raw meat products identified in § 317.344, including those that have been previously frozen, may be provided at their point-of-purchase in accordance with the provisions of this section or on their label, in accordance with the provisions of § 317.309.

(3) A retailer may provide nutrition information at the point-of-purchase, by various methods, such as by posting a sign, or by making the information readily available in brochures, notebooks, or leaflet form in close proximity to the food. The nutrition labeling information may also be supplemented by a video, live demonstration, or other media. If a nutrition claim is made on point-of-purchase materials, all of the format and content requirements of § 317.309 apply. However, if only nutrition information—and not a nutrition claim—is supplied on point-of-purchase materials, the requirements of § 317.309 apply, provided, however:

(i) The listing of percent of Daily Value for the nutrients (except vitamins and minerals specified in § 317.309 (c)(8)) and footnote required by § 317.309(d)(9) may be omitted; and

(ii) The point-of-purchase materials are not subject to any of the format requirements.

* * * * *

(c) For the point-of-purchase materials, the declaration of nutrition information may be presented in a simplified format as specified in § 317.309(f).

* * * * *

8. Section 317.362 would be amended by adding a new paragraph (f) to read as follows:

§ 317.362 Nutrient content claims for fat, fatty acids, and cholesterol content.

* * * * *

(f) A statement of the lean percentage may be used on the label or in labeling of ground or chopped meat products described in § 317.301 when the product does not meet the criteria for ''low fat,'' defined in § 317.362(b)(2), provided that a statement of the fat percentage is contiguous to and in lettering of the same color, size, type, and on the same color background as the statement of the lean percentage.

* * * * *

9. Section 317.400 would be amended as follows:

a. Paragraph (a)(1), introductory text, would be amended by removing the comma and adding, at the end of the paragraph, '', except that this exemption does not apply to the major cuts of

single-ingredient, raw products identified in § 317.344,''.

b. Paragraph (a)(1)(ii) would be amended by adding '', including a single retail store,'' after the phrase ''single-plant facility,'' and by adding, '', including a multi-retail store operation,'' after ''company/firm''.

c. Paragraph (a)(7)(i) would be amended by removing the semi-colon and by adding the following at the end of the paragraph: '', provided, however, that this exemption does not apply to ready-to-eat ground or chopped meat products described in § 317.301 that are packaged or portioned at a retail establishment, unless the establishment qualifies for an exemption under paragraph (a)(1) of this section;''.

d. Paragraph (a)(7)(ii) would be amended by removing the period and by adding the following at the end of the paragraph: '', provided, however, that this exemption does not apply to multi-ingredient ground or chopped meat products described in § 317.301 that are processed at a retail establishment, unless the establishment qualifies for an exemption under paragraph (a)(1) of this section.''

e. Paragraph (d)(1) would be amended by removing the period at the end of the first sentence, and by adding the following to the end of the first sentence: '', except that this exemption does not apply to the major cuts of single-ingredient, raw meat products identified in § 317.344.''

PART 381—POULTRY PRODUCTS INSPECTION REGULATIONS

10. The authority citation for part 381 continues to read as follows:

Authority: 7 U.S.C. 138f, 450; 21 U.S.C. 451–470; 7 CFR 2.18, 2.53.

11. Section 381.400 would be revised to read as follows:

§ 381.400 Nutrition labeling of poultry products.

(a) Unless the product is exempted under § 381.500, nutrition labeling must be provided for all poultry products intended for human consumption and offered for sale, except single-ingredient, raw products that are not ground or chopped products described in § 381.401 and are not major cuts of single-ingredient, raw poultry products identified in § 381.444. Nutrition labeling must be provided for the major cuts of single-ingredient, raw poultry products identified in § 381.444, either in accordance with the provisions of § 381.409 for nutrition labels, or in accordance with the provisions of § 381.445 for point-of-purchase materials, except as exempted under § 381.500. For all other products that require nutrition labeling, including ground or chopped poultry products described in § 381.401, nutrition labeling must be provided in accordance with the provisions of § 381.409, except as exempted under § 381.500.

(b) Nutrition labeling may be provided for single-ingredient, raw poultry products that are not ground or chopped poultry products described in § 381.401 and that are not major cuts of single-ingredient, raw poultry products identified in § 381.444, either in accordance with the provisions of § 381.409 for nutrition labels, or in accordance with the provisions of § 381.445 for point-of-purchase materials.

* * * * *

12. A new § 381.401 would be added to read as follows:

§ 381.401 Required nutrition labeling of ground or chopped poultry products.

Nutrition labels must be provided for all ground or chopped poultry (kind) with or without added seasonings (including, but not limited to, ground chicken, ground turkey, and (kind) burgers) that are intended for human consumption and offered for sale, in accordance with the provisions of § 381.409, except as exempted under § 381.500.

* * * * *

13. Section 381.409 would be amended as follows:

a. In paragraph (b)(3), the first sentence would be amended by adding ''that are not ground or chopped poultry products described in § 381.401'' after the phrase ''single-ingredient, raw products'' and by removing ''as set forth in § 381.445(a)(1)''; the second sentence would be amended by adding, ''that are not ground or chopped poultry products described in § 381.401,'' after the phrase ''single-ingredient, raw products''; and the following new sentence would be added after the first sentence:

* * * * *

(b) * * *

(3) * * * For single-ingredient, raw products that are not ground or chopped poultry products described in § 381.401, if data are based on the product ''as consumed,'' the data must be presented in accordance with § 381.445(d).* * *

b. Paragraph (b)(10) would be amended by adding the following new sentence at the end of the paragraph:

* * * * *

(b) * * *

(10) * * * The declaration of the number of servings per container need not be included in nutrition labeling of single-ingredient, raw poultry products that are not ground or chopped poultry products described in § 381.401, including those that have been previously frozen.

* * * * *

c. Paragraph (b)(11) would be amended by adding the phrase ''single-ingredient, raw products that are not ground or chopped poultry products described in § 381.401 and'' after ''exception of''.

d. Paragraph (d)(3)(ii) would be amended by removing the period and adding ''or on single-ingredient, raw poultry products that are not ground or chopped poultry products described in § 381.401.'' at the end of the paragraph.

e. Paragraph (e)(3) would be amended by adding '', but may be on the basis of ''as consumed'' for single-ingredient, raw poultry products that are not ground or chopped poultry products described in § 381.401,'' after ''as packaged''.

f. Paragraph (h)(9) would be amended by adding, ''that are not ground or chopped poultry products described in § 381.401'' after ''products'', by removing the phrase, ''its published form, the Agriculture Handbook No. 8 series'', and by adding, in its place, ''its released form, the USDA Nutrient Database for Standard Reference'', and by removing the period and adding the following at the end of the paragraph: '', as provided in § 381.445(e) and (f).''

14. Section 381.443 would be removed.

15. Section 381.445 would be amended as follows:

a. Paragraph (d) would be amended by removing ''should'' and adding, in its place, ''for products covered in paragraphs (a)(1) and (a)(2) of this section must''.

b. Paragraph (e) would be amended by removing ''its published form, the Agriculture Handbook No. 8 series'' and by adding, in its place, ''its released form, the USDA Nutrient Database for Standard Reference.''

c. Paragraph (f) would be amended by adding ''provided'' after ''nutrition information is''.

d. The section heading and paragraph, (a) and (c) would be revised to read as follows:

§ 381.445 Nutrition labeling of single-ingredient, raw poultry products that are not ground or chopped products described in § 381.401.

(a)(1) Nutrition information on the major cuts of single-ingredient, raw poultry products identified in § 381.444, including those that have been previously frozen, is required, either on their label or at their point-of-purchase, unless exempted under § 381.500. If

nutrition information is presented on the label, it must be provided in accordance with the provisions of § 381.409. If nutrition information is presented at the point-of-purchase, it must be provided in accordance with the provisions of this section.

(2) Nutrition information on single-ingredient, raw poultry products that are not ground or chopped poultry products described in § 381.401 and are not major cuts of single-ingredient, raw poultry products identified in § 381.444, including those that have been previously frozen, may be provided at their point-of-purchase in accordance with the provisions of this section or on their label, in accordance with the provisions of § 381.409.

(3) A retailer may provide nutrition information at the point-of-purchase, by various methods, such as by posting a sign, or by making the information readily available in brochures, notebooks, or leaflet form in close proximity to the food. The nutrition labeling information may also be supplemented by a video, live demonstration, or other media. If a nutrition claim is made on point-of-purchase materials, all of the format and content requirements of § 381.409 apply. However, if only nutrition information—and not a nutrition claim—is supplied on point-of-purchase materials, the requirements of § 381.409 apply, provided, however:

(i) The listing of percent of Daily Value for the nutrients (except vitamins and minerals specified in § 381.409(c)(8)) and footnote required by § 381.409(d)(9) may be omitted; and

(ii) The point-of-purchase materials are not subject to any of the format requirements.

* * * * *

(c) For the point-of-purchase materials, the declaration of nutrition information may be presented in a simplified format as specified in § 381.409(f).

* * * * *

16. Section 381.462 would be amended by adding a new paragraph (f) to read as follows:

§ 381.462 Nutrient content claims for fat, fatty acids, and cholesterol content.

* * * * *

(f) A statement of the lean percentage may be used on the label or in labeling of ground or chopped poultry products described in § 381.401 when the product does not meet the criteria for ''low fat,'' defined in § 381.462(b)(2), provided that a statement of the fat percentage is contiguous to and in lettering of the same color, size, type, and on the same color background as the statement of the lean percentage.

* * * * *

17. Section 381.500 would be amended as follows:

a. Paragraph (a)(1) would be amended by removing the comma and adding, at the end of the paragraph, '', except that this exemption does not apply to the major cuts of single-ingredient, raw poultry products identified in § 381.444.

b. Paragraph (a)(1)(ii) would be amended by adding, '', including a single retail store,'' after the phrase ''single-plant facility,'' and by adding '', including a multi-retail store operation'' after ''company/firm''.

c. Paragraph (a)(7)(i) would be amended by removing the semi-colon and adding the following at the end of the paragraph: ''provided, however, that this exemption does not apply to ready-to-eat ground or chopped poultry products described in § 381.401 that are packaged or portioned at a retail establishment, unless the establishment qualifies for an exemption under paragraph (a)(1) of this section,'' after ''establishment''.

d. Paragraph (a)(7)(ii) would be amended by removing the period and adding the following at the end of the paragraph: ''provided, however, that this exemption does not apply to multi-ingredient ground or chopped poultry products described in § 381.401 that are processed at a retail establishment, unless the establishment qualifies for an exemption under paragraph (a)(1) of this section.'' after ''establishment''.

e. Paragraph (d)(1) would be amended by removing the period at the end of the sentence, and by adding the following to the end of the sentence: ''except that this exemption does not apply to the major cuts of single-ingredient, raw poultry products identified in § 381.444.''

Done in Washington, DC, on January 8, 2001.

Thomas J. Billy,

Administrator.

[FR Doc. 01–1119 Filed 1–17–01; 8:45 am]

BILLING CODE 3410–DM–P

Federal Register

Thursday,
January 18, 2001

Part V

Environmental Protection Agency

40 CFR Parts 69, 80, and 86

Control of Air Pollution From New Motor Vehicles: Heavy-Duty Engine and Vehicle Standards and Highway Diesel Fuel Sulfur Control Requirements; Final Rule

ENVIRONMENTAL PROTECTION AGENCY

40 CFR Parts 69, 80, and 86

[AMS–FRL–6923–7]

RIN 2060–AI69

Control of Air Pollution from New Motor Vehicles: Heavy-Duty Engine and Vehicle Standards and Highway Diesel Fuel Sulfur Control Requirements

AGENCY: Environmental Protection Agency.

ACTION: Final rule.

SUMMARY: The pollution emitted by diesel engines contributes greatly to our nation's continuing air quality problems. Even with more stringent heavy-duty highway engine standards set to take effect in 2004, these engines will continue to emit large amounts of nitrogen oxides and particulate matter, both of which contribute to serious public health problems in the United States. These problems include premature mortality, aggravation of respiratory and cardiovascular disease, aggravation of existing asthma, acute respiratory symptoms, chronic bronchitis, and decreased lung function. Numerous studies also link diesel exhaust to increased incidence of lung cancer. We believe that diesel exhaust is likely to be carcinogenic to humans by inhalation and that this cancer hazard exists for occupational and environmental levels of exposure.

We are establishing a comprehensive national control program that will regulate the heavy-duty vehicle and its fuel as a single system. As part of this program, new emission standards will begin to take effect in model year 2007, and will apply to heavy-duty highway engines and vehicles. These standards are based on the use of high-efficiency catalytic exhaust emission control devices or comparably effective advanced technologies. Because these devices are damaged by sulfur, we are also reducing the level of sulfur in highway diesel fuel significantly by mid-2006. The program provides substantial flexibility for refiners, especially small refiners, and for manufacturers of engines and vehicles. These options will ensure that there is widespread availability and supply of the low sulfur diesel fuel from the very beginning of the program, and will provide engine manufacturers with the lead time needed to efficiently phase-in the exhaust emission control technology that will be used to achieve the emissions benefits of the new standards.

We estimate that heavy-duty trucks and buses today account for about one-third of nitrogen oxides emissions and one-quarter of particulate matter emissions from mobile sources. In some urban areas, the contribution is even greater. This program will reduce particulate matter and oxides of nitrogen emissions from heavy duty engines by 90 percent and 95 percent below current standard levels, respectively. In order to meet these more stringent standards for diesel engines, the program calls for a 97 percent reduction in the sulfur content of diesel fuel. As a result, diesel vehicles will achieve gasoline-like exhaust emission levels. We are also finalizing more stringent standards for heavy-duty gasoline vehicles, based in part on the use of the low sulfur gasoline that will be available when the standards go into effect.

The clean air impact of this program will be dramatic when fully implemented. By 2030, this program will reduce annual emissions of nitrogen oxides, nonmethane hydrocarbons, and particulate matter by a projected 2.6 million, 115,000 and 109,000 tons, respectively. We project that these reductions and the resulting significant environmental benefits of this program will come at an average cost increase of about $2,000 to $3,200 per new vehicle in the near term and about $1,200 to $1,900 per new vehicle in the long term, depending on the vehicle size. In comparison, new vehicle prices today can range well over $100,000 for larger heavy-duty vehicles. We estimate that when fully implemented the sulfur reduction requirement will increase the cost of producing and distributing diesel fuel by about five cents per gallon.

DATES: This rule will become effective March 19, 2001. The incorporation by reference of certain publications listed in this rule is approved by the Director of the Office of Federal Register as of March 19, 2001.

ADDRESSES: *Comments:* All comments and materials relevant to today's action have been placed in Public Docket No. A–99–06 at the following address: U.S. Environmental Protection Agency (EPA), Air Docket (6102), Room M–1500, 401 M Street, SW, Washington, DC 20460 (on the ground floor in Waterside Mall) from 8:00 a.m. to 5:30 p.m., Monday through Friday, except on government holidays. You can reach the Air Docket by telephone at (202) 260–7548 and by facsimile at (202) 260–4400. We may charge a reasonable fee for copying docket materials, as provided in 40 CFR part 2.

FOR FURTHER INFORMATION CONTACT: Margaret Borushko, U.S. EPA, National Vehicle and Fuel Emissions Laboratory, 2000 Traverwood, Ann Arbor MI 48105; Telephone (734) 214–4334, FAX (734) 214–4816, E-mail borushko.margaret@epa.gov

SUPPLEMENTARY INFORMATION:

Regulated Entities

This action will affect you if you produce or import new heavy-duty engines which are intended for use in highway vehicles such as trucks and buses, or produce or import such highway vehicles, or convert heavy-duty vehicles or heavy-duty engines used in highway vehicles to use alternative fuels, or produce or import light-duty highway diesel vehicles. It will also affect you if you produce, import, distribute, or sell highway diesel fuel, or sell nonroad diesel fuel.

The following table gives some examples of entities that may have to follow the regulations. But because these are only examples, you should carefully examine the regulations in 40 CFR parts 69, 80, and 86. If you have questions, call the person listed in the **FOR FURTHER INFORMATION CONTACT** section of this preamble:

Category	NAICS Codes [a]	SIC Codes [b]	Examples of potentially regulated entities
Industry	336112 336120	3711	Engine and Truck Manufacturers
Industry	811112 811198	7533 7549	Commercial Importers of Vehicles and Vehicle Components
Industry	324110	2911	Petroleum Refiners
Industry	422710 422720	5171 5172	Diesel Fuel Marketers and Distributors
industry	484220	4212	Diesel Fuel Carriers

Category	NAICS Codes [a]	SIC Codes [b]	Examples of potentially regulated entities
	484230	4213	

[a] North American Industry Classifications System (NAICS).
[b] Standard Industrial Classification (SIC) system code.

Access to Rulemaking Documents Through the Internet

Today's final rule is available electronically on the day of publication from the Environmental Protection Agency Internet Web site listed below. Electronic copies of the preamble, regulatory language, Regulatory Impact Analysis, and other documents associated with today's final rule are available from the EPA Office of Transportation and Air Quality (formerly the Office of Mobile Sources) Web site listed below shortly after the rule is signed by the Administrator. This service is free of charge, except any cost that you incur for connecting to the Internet.

Environmental Protection Agency Web Site: *http://www.epa.gov/fedrgstr/* (Either select a desired date or use the Search feature.)

Office of Transportation and Air Quality (OTAQ) Web Site: *http://www.epa.gov/otaq/* (Look in ''What's New'' or under the ''Heavy Trucks/Busses'' topic.)

Please note that due to differences between the software used to develop the document and the software into which document may be downloaded, changes in format, page length, etc. may occur.

Table of Contents

I. Overview
A. What Requirements Are Being Set?
1. Heavy-Duty Emission Standards
2. Fuel Quality Standards
B. Why is EPA Taking This Action?
1. Heavy-Duty Vehicles Contribute to Serious Air Pollution Problems
2. Technology-Based Solutions
3. Basis for Action Under the Clean Air Act
C. Putting This Rule in Perspective
1. Diesel Popularity
2. Past Progress and New Developments
3. Tier 2 Emissions Standards
4. Mobile Source Air Toxics Rulemaking
5. Nonroad Engine Standards and Fuel
6. State Initiatives
7. Retrofit Programs
8. Actions in Other Countries
II. The Air Quality Need and Projected Benefits
A. Overview
B. Public Health and Welfare Concerns
1. Health and Welfare Concerns Raised During Public Hearings
2. Ozone and its Precursors
a. Health and Welfare Effects From Short-Term Exposures to Ozone
b. Current and Future Nonattainment Status With the 1-Hour Ozone NAAQS
c. Public Health and Welfare Concerns from Prolonged and Repeated Exposures to Ozone
3. Particulate Matter
a. Health and Welfare Effects
b. Attainment and Maintenance of the PM_{10} NAAQS
c. Public Health and Welfare Concerns from Exposure to Fine PM
d. Other Welfare Effects Associated with PM
e. Conclusions Regarding PM
4. Diesel Exhaust
a. Potential Cancer Effects of Diesel Exhaust
b. Noncancer Effects of Diesel Exhaust
5. Other Criteria Pollutants
6. Other Air Toxics
a. Benzene
b. 1,3-Butadiene
c. Formaldehyde
d. Acetaldehyde
e. Acrolein
f. Dioxins
7. Other Welfare and Environmental Effects
a. Acid Deposition
b. Eutrophication and Nitrification
c. Polycyclic Organic Matter Deposition
d. Visibility and Regional Haze
C. Contribution From Heavy-Duty Vehicles
1. NO_X Emissions
2. PM Emissions
3. Environmental Justice
D. Anticipated Emissions Benefits
1. NO_X Reductions
2. PM Reductions
3. NMHC Reductions
4. Additional Emissions Benefits
a. CO Reductions
b. SO_X Reductions
c. Air Toxics Reductions
E. Clean Heavy-Duty Vehicles and Low-Sulfur Diesel Fuel are Critically Important for Improving Human Health and Welfare
III. Heavy-Duty Engine and Vehicle Standards
A. Why Are We Setting New Heavy-Duty Standards?
B. Emission Control Technologies for Heavy-Duty Vehicles and Engines
C. What Engine and Vehicle Standards are We Finalizing?
1. Heavy-Duty Engine Exhaust Emissions Standards
a. FTP Standards
b. Supplemental Provisions for HD Diesel Engines (SET & NTE)
c. Crankcase Emissions Control
d. On-Board Diagnostics (OBD)
2. Heavy-Duty Vehicle Exhaust Emissions Standards
a. FTP Standards
b. Supplemental Federal Test Procedure
c. On-Board Diagnostics (OBD)
3. Heavy-Duty Evaporative Emission Standards
D. Incentives for Early Introduction of Clean Engines and Vehicles
E. Feasibility of the New Engine and Vehicle Standards
1. Feasibility of Stringent Standards for Heavy-Duty Diesel
a. Meeting the PM Standard
b. Meeting the NO_X Standard
c. Meeting the NMHC Standard
d. Meeting the Crankcase Emissions Requirements
e. The Complete System
2. Feasibility of Stringent Standards for Heavy-Duty Gasoline
3. Feasibility of the New Evaporative Emission Standards
F. Need for Low Sulfur Diesel Fuel
1. Catalyzed Diesel Particulate Filters and the Need for Low Sulfur Fuel
a. Inhibition of Trap Regeneration Due to Sulfur
b. Loss of PM Control Effectiveness
c. Increased Maintenance Cost for Diesel Particulate Filters Due to Sulfur
2. Diesel NO_X Catalysts and the Need for Low Sulfur Fuel
a. Sulfur Poisoning (Sulfate Storage) on NO_X Adsorbers
b. Sulfate Particulate Production and Sulfur Impacts on Effectiveness of NO_X Control Technologies
3. What About Sulfur in Engine Lubricating Oils?
G. Fuel Economy Impact of High Efficiency Control Technologies
1. Diesel Particulate Filters and Fuel Economy
2. NO_X Control Technologies and Fuel Economy
3. Emission Control Systems for 2007 and Net Fuel Economy Impacts
H. Review of the Status of Heavy-Duty Diesel NO_X Emission Control Technology
IV. Our Program for Controlling Highway Diesel Sulfur
A. Highway Diesel Sulfur Standards for Refiners and Importers
1. Standards and Deadlines that Refiners and Importers Must Meet
2. Temporary Compliance Option for Refiners and Importers
a. Generating Credits
b. Using Credits
c. How Long Will Credits Last?
d. Additional Limitations on Credit Trading for Some States
3. What Information Must Refiners/Importers Submit to Us?
4. Impacts of the Highway Diesel Fuel Program
a. Ensures Adequate Supplies of Highway Diesel Fuel
b. Ensures Widespread Availability of Low Sulfur Diesel Fuel
c. Provides Lower Costs to Refineries
d. Misfueling Concerns Should Be Minimized

e. Summary
B. What Provisions Apply in the Geographic Phase-in Area?
1. What Is the Geographic Phase-in Area and How Was it Established?
2. Highway Diesel Provisions for GPA Refiners
3. How Do Refiners Apply for an Extension of the GPA Gasoline Program?
4. Required Reporting for GPA Refiners
C. Hardship Provisions for Qualifying Refiners
1. Hardship Provisions for Qualifying Small Refiners
a. Qualifying Small Refiners
b. How Do We Define Small Refiners?
c. What Options Are Available for Small Refiners?
d. How Do Small Refiners Apply for Small Refiner Status?
2. Farmer Cooperative Refiners Will Benefit From the Flexible Provisions Available to Other Refiners
3. General Hardship Provisions
a. Temporary Waivers from Low Sulfur Diesel Requirements in Extreme Unforseen Circumstances
b. Temporary Waivers Based on Extreme Hardship Circumstances
D. Technological Feasibility of the Low Sulfur Diesel Fuel Program
1. What Technology Will Refiners Use?
2. Have These Technologies Been Commercially Demonstrated?
3. Feasibility of Distributing Low Sulfur Highway Diesel Fuel
E. What Are the Potential Impacts of the Low Sulfur Diesel Program on Lubricity and Other Fuel Properties?
1. What Is Lubricity and Why Might It Be a Concern?
2. Today's Action on Lubricity: a Voluntary Approach
3. What Are Today's Actions on Fuel Properties Other than Sulfur?
F. How Are State Programs Affected by the Low Sulfur Diesel Program?
1. State Preemption
2. What Provisions Apply in Alaska?
a. Today's Action Regarding the 500 ppm Standard in Alaska
b. Why Are We Treating Alaska Uniquely?
3. What Provisions Apply in American Samoa, Guam, and the Commonwealth of Northern Mariana Islands?
a. Today's Action Regarding the Highway Diesel Fuel Standard in the Territories
b. Why Are We Treating These Territories Uniquely?
G. Refinery Air Permitting
V. Economic Impact
A. Cost for Diesel Vehicles to Meet Emissions Standards
1. Summary of New System and Operating Costs
2. New System Costs for NO_X and PM Emission Control
3. Operating Costs Associated With NO_X and PM Control
B. Cost for Gasoline Vehicles to Meet the New Emissions Standards
1. Summary of New System Costs
2. Operating Costs Associated With Meeting the Heavy-Duty Gasoline Standard
C. Cost of Fuel Change
1. Refinery Costs
2. Highway Diesel Fuel Supply
3. Cost of Lubricity Additives
4. Distribution Costs
a. Distribution Costs Under the Fully Implemented Program
b. Distribution Costs During the Initial Years
5. Benefits of Low-sulfur Diesel Fuel for the Existing Diesel Fleet
D. Aggregate Costs
E. Cost Effectiveness
1. What Is the Cost Effectiveness of This Program?
2. Comparison With Other Means of Reducing Emissions
F. Does the Value of the Benefits Outweigh the Cost of the Standards?
1. What Was Our Overall Approach to the Benefit-Cost Analysis?
2. What Are the Significant Limitations of the Benefit-Cost Analysis?
3. How Has the Benefit-Cost Analysis Changed from Proposal?
4. What Are the Benefits in the Years Leading up to 2030?
5. What Were the Results of the Benefit-Cost Analysis?
VI. Requirements for Engine and Vehicle Manufacturers
A. Compliance with Standards and Enforcement
1. Allowable Maintenance
2. Emission Data Waivers
3. Crankcase Emissions
4. Non-Conformance Penalties
5. Idle CO Standards
B. Compliance With Phase-in Schedules
C. Averaging, Banking, and Trading
D. FTP Changes to Accommodate Regeneration of Exhaust Emission Controls
E. Improvements to the Test Procedures
F. Certification Fuel
G. Misfueling Concerns for Light-and Heavy-duty Diesel Vehicles
H. In-Use Compliance Levels During the Transition Years to New Technologies
VII. Highway Diesel Fuel Program: Compliance, Enforcement and Downstream Provisions
A. General Provisions
1. Definition of Diesel Fuel Covered by This Program
2. Relationship to Highway Diesel Standards
B. What Are the Requirements for Refiners and Importers?
1. General Requirements
2. Refiner and Importer Temporary Compliance Option Provisions and the Credit Trading Program
a. Early Credits Program
b. Credit Use in a Credit Deficit Situation
c. Resolving Issues of Invalid Credits
d. Compliance Provisions
e. Additional Provisions for Importers of Diesel Fuel and for Foreign Refiners Subject to the Temporary Compliance Option and Hardship Provisions
3. Refiner Hardship Provisions
a. General Refiner Hardship Provisions
b. Small Refiner Hardship Provisions
c. Relief for Refiners Supplying Gasoline to the Tier 2 Geographic Phase-In Area (GPA)
C. What Requirements Apply Downstream of the Refinery or Import Facility?
1. Downstream Enforcement of the Standards
2. Other Provisions
a. Implementation Dates
b. Product Segregation and Contamination
c. Diesel Fuel Pump Labeling
3. Use of Used Motor Oil in New Diesel Vehicles
4. Use of Kerosene in Diesel Fuel
5. Use of Diesel Fuel Additives
D. What Are the Testing and Sampling Methods and Requirements?
1. Diesel Fuel Testing Requirements and Test Methods
2. Diesel Fuel Sampling Methods
E. What Are the Recordkeeping, Reporting and Product Transfer Document Requirements?
1. Registration of Refiners and Importers
a. All Refiners and Importers
b. Prospective Small Refiners
c. Refiners Seeking an Extension of the GPA Gasoline Sulfur Standards
2. Pre-Compliance Reports
a. All Refiners
b. Small Refiners
c. GPA Refiners
3. Annual Compliance Reports
a. All Refiners
b. Small Refiners
4. Initial Confirmation of 15 ppm Fuel Production
5. Product Transfer Documents (PTDs)
a. Diesel Fuel
b. Additives
6. Recordkeeping Requirements
7. Record Retention
F. Are There Any Exemptions From the Highway Diesel Fuel Requirements?
1. Research and Development
2. Racing Vehicles
3. Military Fuel
G. Liability and Penalty Provisions for Noncompliance
1. General
2. What Is the Liability That Additive Manufacturers and Distributors, and Parties That Blend Additives into Diesel Fuel, Are Subject To?
a. General
b. Liability When the Additive Is Designated as Complying with the 15 ppm Sulfur Standard
c. Liability When the Additive Is Designated as Having a Possible Sulfur Content Greater than 15 ppm
H. How Will Compliance With the Sulfur Standards Be Determined?
VIII. Standards and Fuel for Nonroad Diesel Engines
IX. Public Participation
X. Administrative Requirements
A. Administrative Designation and Regulatory Analysis
B. Regulatory Flexibility Analysis
1. Need for and Objectives of the Rule
2. Summary of Significant Public Comments on the IRFA
3. Types and Number of Small Entities
4. Reporting, Recordkeeping and Other Compliance Requirements
5. Regulatory Alternatives To Minimize Impact on Small Entities
C. Paperwork Reduction Act

D. Intergovernmental Relations
1. Unfunded Mandates Reform Act
2. Executive Order 13084: Consultation and Coordination with Indian Tribal Governments
E. National Technology Transfer and Advancement Act
F. Executive Order 13045: Children's Health Protection
G. Executive Order 13132: Federalism
H. Congressional Review Act
XI. Statutory Provisions and Legal Authority

I. Overview

This rule covers the second of two phases in a comprehensive nationwide program for controlling emissions from heavy-duty engines (HDEs) and vehicles. It builds upon the phase 1 program we recently finalized (65 FR 59896, October 6, 2000). That action affirmed the 50 percent reduction in emissions of oxides of nitrogen (NO_X) from 2004 model year highway diesel engines, set in 1997 (62 FR 54693, October 21, 1997), and set new emission standards for heavy-duty gasoline-fueled engines and vehicles for 2005.

This second phase of the program looks beyond 2004, based on the use of high-efficiency exhaust emission control devices and the consideration of the vehicle and its fuel as a single system. In developing this rule, we took into consideration comments received in response to the advance notice of proposed rulemaking (64 FR 26142, May 13, 1999) and the notice of proposed rulemaking (NPRM) (65 FR 35430, June 2, 2000), including comments provided at five public hearings last June.

This program will result in particulate matter (PM) and NO_X emission levels that are 90 percent and 95 percent below the standard levels in effect today, respectively. In order to meet these more stringent standards for diesel engines, the rule mandates a 97 percent reduction in the sulfur content of diesel fuel. The heavy-duty engine standards will be effective starting in the 2007 model year and the low sulfur diesel fuel needed to facilitate the standards will be widely available in September 2006. As a result, diesel vehicles will achieve gasoline-like exhaust emission levels, in addition to their inherent advantages over gasoline vehicles with respect to fuel economy, lower greenhouse gas emissions, and lower evaporative hydrocarbon emissions. The rule also includes more stringent standards for heavy-duty gasoline vehicles. In addition to its impact on heavy-duty vehicle emissions, this rule will make clean diesel fuel available in time for implementation of the light-duty Tier 2 standards.

The standards will result in substantial benefits to public health and welfare and the environment through significant reductions in emissions of NO_X, PM, nonmethane hydrocarbons (NMHC), carbon monoxide (CO), sulfur oxides (SO_X), and air toxics. We project that by 2030, this phase 2 program will reduce annual emissions of NO_X, NMHC, and PM by 2.6 million, 115,000 and 109,000 tons, respectively. These emission reductions will prevent 8,300 premature deaths, over 9,500 hospitalizations, and 1.5 million work days lost. All told the benefits of this rule equal $70.3 billion. A sizeable part of the benefits in the early years of this program come from large reductions in the amount of direct and secondary PM caused by the existing fleet of heavy-duty vehicles. These reductions are due to the use of the higher quality diesel fuel in these vehicles.

A. What Requirements Are Being Set?

There are two basic parts to this program: (1) New exhaust emission standards for heavy-duty highway engines and vehicles, and (2) new quality standards for highway diesel fuel. The systems approach of combining the engine and fuel standards into a single program is critical to the success of our overall efforts to reduce emissions, because the emission standards will not be feasible without the fuel change. The feasibility of the emission standards is based on the use of high-efficiency exhaust emission control devices that would be damaged by sulfur in the fuel. This rule, by providing extremely low sulfur diesel fuel, will also enable cleaner diesel passenger vehicles and light-duty trucks. This is because the same pool of highway diesel fuel also services these light-duty diesel vehicles, and these vehicles can employ technologies similar to the high-efficiency heavy-duty exhaust emission control technologies that will be enabled by the fuel change. We believe these technologies are needed for diesel vehicles to comply with our Tier 2 emissions standards for light-duty highway vehicles (65 FR 6698, February 10, 2000).

We believe that this systems approach is a comprehensive way to enable effective new technologies for clean diesel, affecting all sizes of highway diesel engines, and may translate to future reductions from diesel engines used in nonroad applications too. The fuel change, in addition to enabling new technologies, will also produce emissions and maintenance benefits in the existing fleet of highway diesel vehicles. These benefits will include reduced sulfate PM and sulfur oxides emissions, reduced engine wear and less frequent oil changes, and longer-lasting exhaust gas recirculation (EGR) components on engines equipped with EGR. Heavy-duty gasoline vehicles will also be expected to have much lower emissions due to the transfer of recent technology developments for light-duty applications, and the recent action taken to reduce sulfur in gasoline as part of the Tier 2 rule.

The basic elements of the rule are outlined below. Detailed provisions and justifications for our rule are discussed in subsequent sections.

1. Heavy-Duty Emission Standards

We are finalizing a PM emissions standard for new heavy-duty engines of 0.01 grams per brake-horsepower-hour (g/bhp-hr), to take full effect for diesels in the 2007 model year.[1] We are also finalizing standards for NO_X and NMHC of 0.20 g/bhp-hr and 0.14 g/bhp-hr, respectively. These NO_X and NMHC standards will be phased in together between 2007 and 2010, for diesel engines. The phase-in will be on a percent-of-sales basis: 50 percent from 2007 to 2009 and 100 percent in 2010. This phase-in schedule differs somewhat from the proposed schedule for reasons explained in Section III. Gasoline engines will be subject to these standards based on a phase-in requiring 50 percent compliance in the 2008 model year and 100 percent compliance in the 2009 model year. This phase-in schedule also differs from that proposed for reasons explained in Section III. In addition, we are finalizing our proposal to include turbocharged diesels in the existing crankcase emissions prohibition, effective in 2007.

Standards for complete HDVs will be implemented on the same schedule as for gasoline engine standards. For certification of complete vehicles between 8500 and 10,000 pounds gross vehicle weight rating (GVWR), the standards are 0.2 grams per mile (g/mi) for NO_X, 0.02 g/mi for PM, 0.195 g/mi for NMHC, and 0.032 g/mi for formaldehyde.[2] For vehicles between

[1] Note that throughout this preamble we refer to diesel and gasoline vehicles and engines. We tend to use those terms given the preponderance of vehicles using diesel fuel or gasoline fuel in the U.S. heavy-duty highway market. However, when we refer to a diesel engine, we generally mean any engine using the diesel cycle. When we refer to a gasoline engine or vehicle, we generally mean any Otto-cycle vehicle or engine. Therefore, the emission standards discussed throughout this preamble apply equally to engines and vehicles fueled by alternative fuels, unless otherwise specified in the regulatory text accompanying today's rule.

[2] Vehicle weight ratings in this rule refer to GVWR (the curb weight of the vehicle plus its maximum recommended load of passengers and cargo) unless noted otherwise.

10,000 and 14,000 pounds, the standards are 0.4 g/mi for NO_X, 0.02 g/mi for PM, 0.230 g/mi for NMHC, and 0.040 g/mi for formaldehyde. These standards levels are roughly comparable to the engine-based standards in these size ranges. Note that these standards will not apply to vehicles above 8500 pounds that we classify as medium-duty passenger vehicles as part of our Tier 2 program.

Finally, we are adopting new evaporative emissions standards for heavy-duty engines and vehicles, effective on the same schedule as the gasoline engine and vehicle exhaust emission standards. The new standards for 8500 to 14,000 pound vehicles are 1.4 and 1.75 grams per test for the 3-day diurnal and supplemental 2-day diurnal tests, respectively. Standards levels of 1.9 and 2.3 grams per test will apply for vehicles over 14,000 pounds. These standards represent more than a 50 percent reduction in the numerical standards as they exist today.

The program includes flexibility provisions to facilitate the transition to the new standards and to encourage the early introduction of clean technologies, and adjustments to various testing and compliance requirements to address differences between the new technologies and existing engine-based technologies. These provisions are described in Sections III and VI.

2. Fuel Quality Standards

This rule specifies that, beginning June 1, 2006, refiners must begin producing highway diesel fuel that meets a maximum sulfur standard of 15 parts per million (ppm). All 2007 and later model year diesel-fueled vehicles must be refueled with this new low sulfur diesel fuel. This sulfur standard is based on our assessment of the impact of sulfur on advanced exhaust emission control technologies, and a corresponding assessment of the feasibility of low sulfur fuel production and distribution.

Today's program includes a combination of flexibilities available to refiners to ensure a smooth transition to low sulfur highway diesel fuel. First, refiners can take advantage of a temporary compliance option, including an averaging, banking and trading component, beginning in June 2006 and lasting through 2009, with credit given for early compliance before June 2006. Under this temporary compliance option, up to 20 percent of highway diesel fuel may continue to be produced at the existing 500 ppm sulfur maximum standard. Highway diesel fuel marketed as complying with the 500 ppm sulfur standard must be segregated from 15 ppm fuel in the distribution system, and may only be used in pre-2007 model year heavy-duty vehicles. Second, we are providing additional hardship provisions for small refiners to minimize their economic burden in complying with the 15 ppm sulfur standard. Third, we are providing additional flexibility to refiners subject to the Geographic Phase-in Area (GPA) provisions of the Tier 2 gasoline sulfur program, which will allow them the option of staggering their gasoline and diesel investments. Finally, we are adopting a general hardship provision for which any refiner may apply on a case-by-case basis under certain conditions. These hardship provisions, coupled with the temporary compliance option, will provide a ''safety valve'' allowing up to 25 percent of highway diesel fuel produced to remain at 500 ppm for these transitional years to minimize any potential for highway diesel fuel supply problems.

In addition, today's program includes unique provisions for implementing the low sulfur diesel fuel program in the State of Alaska, given that it is exempt from the current 500 ppm standard. Certain U.S. territories are excluded from both the new engine standards and highway diesel fuel standards.

The compliance provisions for ensuring diesel fuel quality are essentially consistent with those that have been in effect since 1993 under the existing 500 ppm sulfur standard (55 FR 34120, August 21, 1990). Additional compliance provisions have been established primarily during the transition years of the program to verify refiners' compliance with the temporary compliance option to ensure the two grades of highway diesel fuel remain segregated, and to discourage misfueling of model year 2007 and later diesel vehicles.

B. Why is EPA Taking This Action?

1. Heavy-Duty Vehicles Contribute to Serious Air Pollution Problems

As discussed in detail in Section II, emissions from heavy-duty vehicles contribute greatly to a number of serious air pollution problems, and would have continued to do so into the future absent further controls to reduce these emissions. First, heavy-duty vehicles contribute to the health and welfare effects of ozone, PM, NO_X, SO_X, and volatile organic compounds (VOCs), including toxic compounds such as formaldehyde. These adverse effects include premature mortality, aggravation of respiratory and cardiovascular disease (as indicated by increased hospital admissions and emergency room visits, school absences, work loss days, and restricted activity days), changes in lung function and increased respiratory symptoms, changes to lung tissues and structures, altered respiratory defense mechanisms, chronic bronchitis, and decreased lung function. Ozone also causes crop and forestry losses, and PM causes damage to materials and soiling of commonly used building materials and culturally important items such as statues and works of art. Second, NO_X, SO_X and PM contribute to substantial visibility impairment in many parts of the U.S. Third, NO_X emissions from heavy-duty trucks contribute to the acidification, nitrification and eutrophication of water bodies. Fourth, the Agency has concluded, and the Clean Air Scientific Advisory Committee has approved in public session, that diesel exhaust is likely to be carcinogenic to humans.

Millions of Americans live in areas with unhealthful air quality that currently endangers public health and welfare. Without emission reductions from the standards for heavy-duty vehicles, there is a significant risk that an appreciable number of 45 areas with 128 million people across the country will violate the 1-hour ozone national ambient air quality standard (NAAQS) during the period when these standards will take effect. Furthermore, our analysis shows that PM_{10} concentrations in 10 areas with a population of 28 million people face a significant risk of exceeding the PM_{10} NAAQS without significant additional controls between 2007 and 2030. Under the mandates and authorities in the Clean Air Act, Federal, state, and local governments are working to bring ozone and particulate levels into compliance with the 1-hour ozone and PM_{10} NAAQS through State Implementation Plan (SIP) attainment and maintenance plans, and to ensure that future air quality reaches and continues to achieve these health-based standards. The reductions in this rulemaking will play a critical part in these important efforts to attain and maintain the NAAQS. In addition, reductions from this action will also reduce public health and welfare effects associated with ozone and fine PM at concentrations that do not constitute a violation of the 1-hour ozone and PM_{10} NAAQS.

Emissions from heavy-duty vehicles account for substantial portions of the country's ambient PM and NO_X levels. (NO_X is a key precursor to ozone formation). By 2007, we estimate that heavy-duty vehicles will account for 28 percent of mobile source NO_X emissions and 20 percent of mobile source PM emissions. These proportions are even

higher in some urban areas, such as in Sacramento, Atlanta, and Washington, DC, where HDVs contribute over 34 percent of the mobile source NO_X emissions, and in Santa Fe, Los Angeles, and Hartford, where heavy-duty vehicle PM emissions account for 38, 25 and 30 percent of the mobile source PM emissions inventory, respectively. Over time, the relative contribution of diesel engines to air quality problems will go even higher if diesel-equipped light-duty vehicles become more popular, as is expected by some automobile manufacturers. The PM and NO_X standards for heavy-duty vehicles in this rule will have a substantial impact on emissions. By 2030, NO_X emissions from heavy-duty vehicles under today's standards will be reduced by 2.6 million tons, and PM emissions will decline by about 109,000 tons, dramatically reducing this source of NO_X and PM emissions. Urban areas, which include many poorer neighborhoods, can be disproportionately impacted by HDV emissions, and these neighborhoods will thus receive a relatively larger portion of the benefits expected from new HDV emissions controls.

In addition to its contribution to PM inventories, diesel exhaust PM is of special concern because it has been implicated in an increased risk of lung cancer and respiratory disease. The EPA draft Health Assessment Document for Diesel Exhaust (Draft Assessment) was reviewed in public session by the Clean Air Scientific Advisory Committee (CASAC) on October 12–13, 2000.[3] The Agency has concluded, and the CASAC approved at this session, that diesel exhaust is likely to be carcinogenic to humans. State and local governments, in their efforts to protect the health of their citizens and comply with requirements of the Clean Air Act (CAA or ''the Act''), have recognized the need to achieve major reductions in diesel PM emissions, and have been seeking Agency action in setting stringent new standards to bring this about.[4]

2. Technology-Based Solutions

Although the air quality problems caused by diesel exhaust are challenging, we believe they can be resolved through the application of high-efficiency emissions control technologies. As discussed in detail in Section III, the development of diesel emissions control technology has advanced in recent years so that very large emission reductions (in excess of 90 percent) are possible, especially through the use of catalytic emission control devices installed in the vehicle's exhaust system and integrated with the engine controls. These devices are often referred to as ''exhaust emission control'' or ''aftertreatment'' devices. Exhaust emission control devices, in the form of the well-known catalytic converter, have been used in gasoline-fueled automobiles for 25 years, but have had only limited application in diesel vehicles.

Based on the Clean Air Act requirements discussed in Section I.B.3, we are setting stringent new emission standards that will result in the use of these diesel exhaust emission control devices (see Section III). We are also finalizing changes to diesel fuel quality standards in order to enable these high-efficiency technologies (Section IV). Heavy-duty gasoline engines will also be able to reach the significantly lower emission levels envisioned in this rule by relying on the transfer of recent technology developments for light-duty applications, given the recent action taken to reduce sulfur in gasoline (65 FR 6698, February 10, 2000).

To meet the new standards, application of high-efficiency exhaust emission controls for both PM and NO_X will be needed. High-efficiency PM exhaust emission control technology has been available for several years, although engine manufacturers have generally not needed this technology in order to meet our PM emission standards. This technology has continued to improve over the years, especially with respect to durability and robust operation in use. It has also proven extremely effective in reducing exhaust hydrocarbon emissions. Thousands of such systems are now in use in fleet programs, especially in Europe. However, as discussed in detail in Section III, these systems are very sensitive to sulfur in the fuel. For the technology to be viable and capable of meeting the standards, we believe that it will require diesel fuel with sulfur content capped at the 15 ppm level.

Similarly, high-efficiency NO_X exhaust emission control technology will be needed if heavy-duty vehicles are to attain the new standards. We believe this technology, like the PM technology, is dependent on the 15 ppm maximum diesel fuel sulfur levels being adopted in this rule to be feasible and capable of achieving the standards. Similar high-efficiency NO_X exhaust emission control technology has been quite successful in gasoline direct injection engines that operate with an exhaust composition fairly similar to diesel exhaust. However, as discussed in Section III, application of this technology to diesels has some additional engineering challenges. In that section we discuss the current status of this technology. We also discuss the major development issues still to be addressed and the development steps that can be taken to address these issues. With the lead time available and the certainty of low-sulfur diesel fuel established by today's action, the evidence leaves us confident that the application of this technology to diesels will proceed at a reasonable rate of progress and will result in systems capable of achieving the standards.

The need to reduce the sulfur in diesel fuel is driven by the requirements of the exhaust emission control technology that we project will be needed to meet the standards. The challenge in accomplishing the sulfur reduction is driven by the feasibility of needed refinery modifications, and by the costs of making the modifications and running the equipment. Today, a number of refiners are acting to provide low sulfur diesel to some markets. In consideration of the impacts that sulfur has on the efficiency, reliability, and fuel economy impact of diesel engine exhaust emission control devices, we believe that controlling the sulfur content of highway diesel fuel to the 15 ppm level is necessary and feasible, and, in the context of this rule's overall program, cost effective.

3. Basis For Action Under the Clean Air Act

Section 202(a)(1) of the Act directs us to establish standards regulating the emission of any air pollutant from any class or classes of new motor vehicles or engines that, in the Administrator's judgment, cause or contribute to air pollution which may reasonably be anticipated to endanger public health or welfare. Section 202(a)(3) requires that EPA set standards for heavy-duty trucks that reflect the greatest degree of emission reduction achievable through the application of technology which we determine will be available for the model year to which the standards apply. We are to give appropriate consideration to cost, energy, and safety factors associated with the application of such technology. We may revise such technology-based standards, taking costs into account, on the basis of information concerning the effects of air pollution from heavy-duty vehicles or engines and other sources of mobile source related

[3] EPA (2000) Review of EPA's Health Assessment Document for Diesel Exhaust (EPA 600/8–90/057E). Review by the Clean Air Scientific Advisory Committee (CASAC) December 2000. EPA–SAB–CASAC–01–003.

[4] For example, see letter dated July 13, 1999 from John Elston and Richard Baldwin on behalf of the State and Territorial Air Pollution Program Administrators and the Association of Local Air Pollution Control Officials (docket A–99–06, item II–D–78).

pollutants on the public health and welfare. Section 202(a)(3)(C) requires that promulgated standards apply for no less than three years and go into effect no less than 4 years after promulgation. This rule conforms with these statutory requirements.

We believe the evidence provided in Section III and the Regulatory Impact Analysis (RIA) indicates that the stringent emission standards finalized today are feasible and reflect the greatest degree of emission reduction achievable in the model years to which they apply. We have given appropriate consideration to costs in choosing these standards. Our review of the costs and cost-effectiveness of these standards indicate that they will be reasonable and comparable to the cost-effectiveness of other emission reduction strategies that have been required or could be required in the future. We have also reviewed and given appropriate consideration to the energy factors of this rule in terms of fuel efficiency and effects on diesel fuel supply, production, and distribution, as discussed below, as well as any safety factors associated with these standards.

The information regarding air quality and the contribution of heavy-duty engines to air pollution in Section II and the RIA provides strong evidence that emissions from such engines significantly and adversely impact public health or welfare. First, there is a significant risk that several areas will fail to attain or maintain compliance with the NAAQS for 1-hour ozone concentrations or PM_{10} concentrations during the period that these new vehicle and engine standards will be phased into the vehicle population, and that heavy-duty engines contribute to such concentrations, as well as to concentrations of other NAAQS-related pollutants. This risk will be significantly reduced by the standards adopted today; however, the evidence indicates that some risk remains even after the reductions achieved by these new controls on heavy-duty vehicles and diesel fuel. Second, EPA believes that diesel exhaust is likely to be carcinogenic to humans. The risk associated with exposure to diesel exhaust includes the particulate and gaseous components. Some of the toxic air pollutants associated with emissions from heavy-duty vehicles and engines include benzene, formaldehyde, acetaldehyde, dioxin, acrolein, and 1,3-butadiene. Third, emissions from heavy-duty engines contribute to regional haze and impaired visibility across the nation, as well as acid deposition, POM deposition, eutrophication and nitrification, all of which are serious environmental welfare problems.

Based on this evidence, EPA believes that, for purposes of section 202(a)(1), emissions of NO_X, VOCs, SO_x and PM from heavy-duty trucks can reasonably be anticipated to endanger the public health or welfare. In addition, this evidence indicates that it will not be appropriate to modify the technology-based standards pursuant to section 202(a)(3)(B). EPA believes that it is required under section 202(a)(3)(A) to set technology-based standards that meet the criteria of that provision, and is not required to make an affirmative determination under section 202(a)(1). Instead EPA is authorized to take air quality into consideration under section 202(a)(3)(B) in deciding whether to modify or not set standard under section 202(a)(3)(A). In this case, however, EPA believes the evidence fully supports a determination under section 202(a)(1) to set standards, and a determination not to modify such standards under section 202(a)(3)(B).

In addition, there is significant evidence that emissions from heavy-duty trucks contribute to levels of ozone such that large segments of the national population are expected to experience prolonged exposure over several hours at levels that present serious concern for the public health and welfare. The same is true for exposure to fine PM. These public health and welfare problems are expected to occur in many parts of the country, including areas that are in compliance with the 1-hour ozone and PM_{10} NAAQS (PM_{10} is particulate matter that is 10 microns or smaller). This evidence is an additional reason why the controls finalized today are justified and appropriate under the Act. While EPA sees this as additional support for this action, EPA also believes that the evidence of air pollution problems summarized above and described in greater detail elsewhere is an adequate justification for this rule independent of concern over prolonged exposure to ozone and fine PM levels.

Section 211(c) of the CAA allows us to regulate fuels where emission products of the fuel either: (1) Cause or contribute to air pollution that reasonably may be anticipated to endanger public health or welfare, or (2) will impair to a significant degree the performance of any emission control device or system which is in general use, or which the Administrator finds has been developed to a point where in a reasonable time it will be in general use were such a regulation to be promulgated. This rule meets each of these criteria. The discussion of the first test is substantially the same as the above discussion for the heavy-duty engine standards, because SO_x and sulfate PM emissions from heavy-duty diesel vehicles are due to sulfur in diesel fuel. The substantial adverse effect of high diesel sulfur levels on diesel control devices or systems expected to be used to meet the heavy-duty standards is discussed in depth in Section III.F and in the RIA. In addition, our authority under section 211(c) is discussed in more detail in Appendix A to the RIA.

C. Putting This Rule In Perspective

There are several helpful perspectives to establish in understanding the context for this rule: the growing popularity of diesel engines, past progress and new developments in diesel emissions control, Tier 2 light-duty emission standards and other related EPA initiatives (besides the above-discussed rulemaking for highway heavy-duty engine emission standards in 2004), and recent actions and plans to control diesel emissions by the States and in other countries.

1. Diesel Popularity

The diesel engine is increasingly becoming a vital workhorse in the United States, moving much of the nation's freight, and carrying out much of its farm, construction, and other labor. Diesel engine sales have grown significantly over the last decade, so that now about a million new diesel engines are put to work in the U.S. every year. Unfortunately, these diesel engines emit large quantities of harmful pollutants annually.

Furthermore, although diesel emissions in this country come mostly from heavy-duty trucks and nonroad equipment, an additional source may grow out of auto manufacturers' plans to greatly increase the sales of diesel-powered light-duty vehicles (LDVs) and especially of light-duty trucks (LDTs), a category that includes the fast-selling sport-utility vehicles, minivans, and pickup trucks. These plans reflect the continuation of an ongoing dieselization trend, a trend recently most evident in the growing popularity of diesel-powered light heavy-duty trucks (8500 to 19,500 pounds). Diesel market penetration is working its way from larger to smaller highway applications and to a broader array of nonroad equipment applications. Finally, especially in Europe where diesels have already gained a broad consumer acceptance, the diesel engine is increasingly viewed as an attractive technology option for reducing emissions of gases that contribute to

global warming, because it has greater operating efficiency than a gasoline engine.

2. Past Progress and New Developments

Since the 1970's, highway diesel engine designers have employed numerous strategies to meet our emissions standards, beginning with smoke controls, and focusing in the 1990's on increasingly stringent NO_X, hydrocarbon, and PM standards. These strategies have generally focused on reducing engine-out emissions and not on exhaust emission controls, although relatively low-efficiency oxidation catalysts have been applied in some designs to reduce PM, with the recognition that their effectiveness is limited by sulfur in the fuel. On the fuel side, we set quality standards that provided emissions benefits by limiting the amount of sulfur and aromatics in highway diesel fuel beginning in 1993 (55 FR 34120, August 21, 1990). Our most recent round of standard setting for heavy-duty highway diesels occurred in 1997 (62 FR 54693, October 21, 1997), effective with the 2004 model year. These standards were recently reviewed in a final rulemaking (65 FR 59896, October 6, 2000). These actions will result in engines that emit only a fraction of the NO_X, hydrocarbons, and PM produced by engines manufactured just a decade ago. We consider this an important first phase of our current initiative to reconcile the diesel engine with the environment.

Nevertheless, certain characteristics inherent in the way diesel fuel combustion occurs have prevented achievement of emission levels comparable to those of today's gasoline-fueled vehicles. Although diesel engines provide advantages in terms of fuel economy, durability, and evaporative emissions, and have inherently low exhaust emissions of hydrocarbons and carbon monoxide, controlling NO_X emissions is a greater challenge for diesel engines than for gasoline engines, primarily because of the ineffectiveness of three-way catalysis in the oxygen-rich and relatively cool diesel exhaust environment. Similarly, PM emissions, which are inherently low for properly operating gasoline engines, are more difficult to control in diesel engines, because the diesel combustion process tends to form soot particles. The challenge is somewhat complicated by the fact that historical diesel NO_X control approaches tend to increase PM, and vice versa, but both are harmful pollutants that need to be controlled.

Considering the air quality impacts of diesel engines and the potential for growth of diesels in the lighter-duty portion of the market, it is imperative that progress in diesel emissions control continue. Significant progress has already been made in the design of exhaust emission control devices for diesel applications, driven in part by the challenge presented by the stringent Tier 2 standards for light-duty vehicles. As discussed in detail in Section III, new exhaust emission control technologies for NO_X, PM, and hydrocarbon reduction will allow a major advancement in diesel emissions control of a magnitude comparable to that ushered in by the automotive catalytic converter in the 1970's. However, changes in diesel fuel quality will be needed to enable these high-efficiency exhaust emission control devices.

3. Tier 2 Emissions Standards

Auto manufacturers' design plans for new light-duty diesel vehicle models will be greatly affected by our recent adoption of stringent new emission standards for light-duty highway vehicles (referred to as ''Tier 2'' standards) that will phase in between 2004 and 2009. These Tier 2 standards will require significant improvements in electronic engine controls and catalysts on gasoline vehicles. We anticipate that these advances will be transferred over to heavy-duty gasoline vehicles in meeting the standards finalized in this rule. The Tier 2 NO_X and PM standards, that apply equally to gasoline and diesel vehicles, will also require the use of high-efficiency emission control technologies on light-duty diesel vehicles. The low sulfur highway diesel fuel brought about by this rule will make it possible for designers to employ these high-efficiency exhaust emission control technologies in these light-duty applications. The timing of the fuel change provides for the use of these devices in time to satisfy Tier 2 phase-in requirements.

The Tier 2 program phases in interim and final standards over a number of years, providing manufacturers the option of delaying some of their production of final Tier 2 designs until later in the phase-in. For vehicles up to 6000 lbs GVWR (LDVs) and light light-duty trucks (LLDTs)), the interim standards begin in 2004 and phase out by 2007, as they are replaced by the final Tier 2 standards. For vehicles between 6000 and 8500 lbs (heavy light-duty trucks (HLDTs)), the interim standards begin in 2004 and phase out by 2009 as they are replaced by the final Tier 2 standards. A new category of vehicles between 8,500 and 10,000 lbs, medium-duty passenger vehicles (MDPVs), will follow the same phase-in schedule as HLDTs.

Our assessment in the Tier 2 final rule is that the interim standards are feasible for diesel vehicles without a need for fuel quality changes. Manufacturers can take advantage of the flexibilities provided in the Tier 2 program to delay the need for light-duty diesels to meet the final Tier 2 levels until late in the phase-in period (as late as 2007 for LDVs and LLDTs, and 2009 for HLDTs and MDPVs). However, low sulfur fuel is expected to be needed for diesel vehicles designed to meet the final NO_X and PM standards, because these vehicles are likely to employ light-duty versions of the sulfur-sensitive exhaust emission control technologies discussed in Section III. The gasoline quality changes and light-duty gasoline engine developments that will result from the Tier 2 rule will also help make it feasible for heavy-duty gasoline engines to meet the standards in this rule.

4. Mobile Source Air Toxics Rulemaking

Passenger cars, on-highway trucks, and nonroad equipment emit hundreds of different compounds and elements. Several of these are considered to be known, likely, or possible human carcinogens. These include diesel exhaust, plus several VOCs such as acetaldehyde, benzene, 1,3-butadiene, formaldehyde, and acrolein. Trace metals may also be present in heavy-duty diesel engine emissions, resulting from metals in fuels and lubricating oil, and from engine wear. Several of these metals have carcinogenic and mutagenic effects.

Important reductions in these and other mobile source air toxics have occurred under existing programs established under Clean Air Act Sections 202(a) (on-highway engine requirements), 211 (the fuel requirements), and 213 (nonroad engine requirements). Although these programs are primarily designed for control of criteria pollutants, especially ozone and PM_{10}, they also achieve important reductions in diesel PM and gaseous air toxics through VOC and hydrocarbon controls.

In addition to these programs, Section 202(l)(2) of the Act directs us to consider additional controls to reduce emissions of hazardous air pollutants from motor vehicles, their fuels, or both. Those standards are to reflect the greatest degree of emission reduction achievable through the application of technology which will be available, taking into account existing standards, costs, noise, energy, and safety factors. We published a proposed rule on mobile source air toxics on August 4,

2000 (65 FR 48058). This MSAT final rule was signed on December 20, 2000. Interested parties should refer to the final rule if interested in the ultimate form of the regulation.

The mobile source air toxics (MSATs) rule consists of four parts. First, we identify a list of 21 MSATs that are known to be emitted from motor vehicles or their fuels and are considered by the Agency to pose potential adverse human health risks. Diesel exhaust is included on this MSAT list because, as discussed in Section II, human epidemiological studies have suggested that diesel exhaust is associated with increased risk of adverse respiratory effects and lung cancer. Second, the MSAT rule considers the contribution of mobile sources to the nation's air toxics inventory and evaluates the toxics benefits of existing mobile source emission control programs. The benefits of the program as proposed are included in this analysis. Third, the MSAT final rule considers whether additional controls are appropriate at this time, given technological feasibility, cost, and the other criteria specified in the Act. The final rule includes a toxics performance standard applicable to reformulated gasoline and anti-dumping standards that apply to conventional gasoline. With regard to additional vehicle-based controls, we proposed that it is not appropriate at this time to set more stringent standards than the technology forcing standards found in this rule and our recently adopted Tier 2 rulemaking. Finally, because of our concern about the potential future health impacts of exposure to the public of air toxics from the remaining emissions from mobile sources in the future, we continue our toxics-related research activities and to conduct a future rulemaking to evaluate whether, based on the additional data, additional mobile source air toxics controls should be adopted. This rulemaking would be completed no later than 2004.

EPA also intends to rely on today's rule to satisfy in part its obligations under section 202(l) of the Clean Air Act. In the mobile source air toxics NPRM, the Agency proposed a list of mobile source air toxics, including diesel exhaust, as well as a number of specific constituents of heavy-duty vehicle exhaust (gasoline and diesel).[5] The emissions standards established in today's action result in the greatest achievable reductions of diesel PM and heavy-duty vehicle NMHC. The Agency is scheduled to finalize the mobile source air toxics rulemaking on or before December 20, 2000.

5. Nonroad Engine Standards and Fuel

Although this rule covers only highway diesel engines and fuel, it is clear that potential requirements for nonroad diesel engines and fuel are related. It is expected that nonroad diesel fuel quality, currently unregulated, may need to be controlled in the future in order to reduce the large contribution of nonroad engines to NO_X and PM inventories. Refiners, fuel distributors, states, environmental organizations, and others have asked that we provide as much information as possible about the future specifications for both types of fuel as early as possible.

We do plan to give further consideration to additional control of nonroad engine emissions. As discussed below in Section VIII, an effective control program for these engines requires the resolution of several major issues relating to engine emission control technologies and how they are affected by fuel sulfur content. The many issues connected with any rulemaking for nonroad engines and fuel warrant serious attention, and we believe it is premature for us to take any action on this initiative in this rule. We plan to initiate action in the future to formulate proposals that would address both nonroad diesel fuel and engines.

6. State Initiatives

The California Air Resources Board (ARB) and local air quality management districts within California are also pursuing measures to better control diesel emissions. Key among these efforts is work resulting from the Board's designation of particulate emissions from diesel-fueled engines as a toxic air contaminant (TAC) on August 27, 1998. TACs are air pollutants that may cause or contribute to an increase in death or serious illness or may pose a present or future hazard to human health. The TAC designation was based on research studies showing that emissions from diesel-fueled engines may cause cancer in animals and humans, and that workers exposed to higher levels of emissions from diesel-fueled engines are more likely to develop lung cancer.

In September 2000 the ARB approved a Diesel Risk Reduction Plan developed by its staff following an extensive public process.[6] This plan includes several California measures related to highway diesel vehicles, including the major elements of the program we are establishing on a nationwide basis in this final rule. Because truck travel from other states has a large effect on California's air quality, the plan and the Board's resolution further encourages the EPA adopt this nationwide program, as well as other diesel-related emissions reduction programs.

The ARB has also adopted stringent new emission requirements for urban transit buses and is considering similar requirements for school buses.[7] This program is aimed at encouraging the use of clean alternative fuels and high-efficiency diesel emission control technologies. Their program includes requirements for zero-emissions buses, fleet average NO_X levels, and retrofits for PM control, as well as model year 2007 NO_X and PM standards levels of 0.2 and 0.01 g/bhp-hr, respectively (equal to the levels finalized in this rule). It also requires that all diesel fuel used by transit agencies after July 1, 2002 must meet a cap of 15 ppm sulfur. This is a much earlier schedule than that finalized in this rule, to support the ARB's proposed transit bus fleet program.

Other states, most notably Texas, have taken steps toward adopting programs for cleaner diesel fuel and cleaner diesel engines. On December 6, 2000, the Texas Natural Resource Conservation Commission adopted a program that, among other things, would require the capping of diesel fuel sulfur levels in many counties to 15 ppm by June 2006.[8] This proposal exemplifies the importance that states with air quality problems have attached to clean diesel fuel, and specifically to the 15 ppm maximum sulfur requirement in 2006 being set in this rule

7. Retrofit Programs

Many States facing air quality improvement challenges have expressed strong interest in programs that will reduce emissions from existing highway and nonroad diesel engines through the retrofitting of these engines with improved emission control devices. The urban transit bus program adopted by the California ARB includes such a retrofit requirement as one of its major components (see Section I.C.6). In March 2000 we announced our own Diesel Retrofit Initiative to support and

[5] 65 FR 48058, August 4, 2000.

[6] State of California Air Resources Board Resolution 00–30, September 28, 2000.

[7] ''Notice of Public Hearing To Consider the Adoption of a Public Transit Bus Fleet Rule and Emission Standards For New Urban Buses'', California ARB, November 30, 1999, and ARB Resolution 00–2, dated February 24, 2000.

[8] Title 30, Texas Administrative Code, Chapter 114, Subchapter H, Division 2. Also see Texas Natural Resource Conservation Commission website www.tnrcc.state.tx.us.

encourage fleet operators, air quality planners, and retrofit manufacturers in creating effective retrofit programs. These programs are appealing because the slow turnover of the diesel fleet to the new low-emitting engines makes it difficult to achieve near-term air quality goals through new engine programs alone. Some of the exhaust emission control technologies discussed in this rule are especially appealing for use in retrofits because they can be fitted to an existing vehicle as add-on devices without major engine modifications, although some of the more sophisticated systems that require careful control of engine parameters may be more challenging.

Because of the uncertainty at this time in how and when such programs may be implemented, our analysis for today's rule does not calculate any benefits from them. Nevertheless, we believe that this program can enable the viability of these retrofit technologies. We expect that large emission benefits from the existing fleet could be realized as a result of the fuel changes we are finalizing here, combined with retrofit versions of the technologies that will be developed in response to the finalized engine standards. These benefits will be especially important in the early years of the program when new vehicles standards are just beginning to have an impact, and when States and local areas need to gain large reductions to attain air quality goals.

8. Actions In Other Countries

There is substantial activity taking place in many countries related to the regulation of diesel fuel and engines. The large light-duty vehicle market share enjoyed by diesels in many European countries has helped to stir innovation in dealing with diesel emissions problems. Advanced emissions control technologies are being evaluated there in the in-use fleet and experience gained from these trials is helping to inform the diesel emissions control discussion in the U.S. In addition, several European countries have low sulfur diesel fuel, with maximum sulfur levels varying from 10 to 50 ppm, and so experience gained from the use of these fuels, though not completely transferable to the U.S. situation, also provides valuable experience. European Union countries will limit sulfur in diesel fuel to 50 ppm by 2005, and even more aggressive plans are being discussed or implemented. The United Kingdom made a rapid conversion to 50 ppm maximum sulfur diesel fuel in 1999 by offering tax incentives. This change occurred with much smaller refinery investments than had been predicted, and some refinery production there is actually at levels well below the 50 ppm cap. Germany is moving forward with plans to introduce a 10 ppm sulfur cap for diesel fuel by 2003, also via tax incentives, and is attempting to get the 50 ppm specification that was adopted by the European Commission revised downward to the 10 ppm cap level. The Commission is reviewing the implications of moving to this level.

One European country has had extensive experience with the transition to low sulfur diesel fuel. In the early 1990's, Sweden decided to take advantage of the environmental benefits of 10 ppm sulfur/low aromatics fuel by introducing it with a reduction in the diesel fuel tax. The program has been quite successful, and in excess of 90 percent of the highway diesel fuel used there is of this 10 ppm maximum sulfur class.[9]

The government of Canada has expressed its intent to harmonize its fuel regulations with the U.S. fuels standards being adopted today.[10] This would simplify the operation of new-technology vehicles that cross the U.S-Canada border. However, the success of the U.S. program does not depend on harmonized diesel fuel standards, and Section VI.H discusses how differences between the future fuel specifications in the U.S. and those in Canada and Mexico may be accommodated.

II. The Air Quality Need and Projected Benefits

A. Overview

Heavy-duty vehicle emissions contribute to air pollution with a wide range of adverse health and welfare impacts. Emissions of VOC, CO, NO_X, SO_x, and PM from HD vehicles contribute a substantial percentage of the precursors or direct components of ambient concentrations of ozone, PM, sulfur and nitrogen compounds, aldehydes, and substances known or considered likely to be carcinogens. Emissions of VOCs include some specific substances known or suspected to cause cancer. Of particular concern is human epidemiological evidence linking diesel exhaust to an increased risk of lung cancer, and the Agency is also concerned about the noncancer health effects of diesel exhaust We have finalized on December 20, 2000 a rule which lists diesel particulate matter and diesel exhaust organic gases as a mobile source air toxic under section 202(l) of the Clean Air Act, and the particulate matter standard finalized today reflects the greatest degree of emissions reductions achievable under section 202(l) for on-highway heavy-duty vehicle PM emissions. Heavy-duty vehicle emissions also cause adverse environmental effects including visibility reductions, acid rain, nitrification and eutrophication of water bodies.

Emissions from heavy-duty vehicles, which are predominantly diesel-powered, account for substantial portions of the country's ambient PM and ground-level ozone levels. By 2007, we estimate that heavy-duty vehicles will account for 28 percent of mobile source NO_X emissions (including highway and non-road), and 20 percent of mobile source PM emissions. These proportions are even higher in some urban areas, such as Atlanta and Los Angeles. Urban areas, which include many poorer neighborhoods, can be disproportionately impacted by HDV emissions because of heavy traffic in and out of densely populated urban areas.

The Agency developed new emissions inventories and conducted new air quality modeling for this rule to determine the risk of exposure to unhealthy ambient concentrations of ozone and particulate matter in 2007, 2020 and 2030. This analysis, supplemented with local air quality modeling and other information on emissions and air quality trends, indicates that an appreciable number of the 45 areas with a total population of 128 million people face a significant risk of violating the 1-hour ozone standard between 2007 and 2030. Ten PM_{10} nonattainment areas with 28 million people face a significant risk of experiencing particulate matter levels that violate the PM_{10} standard during the same period.

Under the mandates and authorities in the Clean Air Act, federal, state, and local governments are working to bring ozone and particulate levels into compliance with the 1-hour ozone and PM_{10} NAAQS through SIP attainment plans. Areas that reach attainment without reductions from this rule are likely to need additional reductions to ensure that future air quality continues to achieve ozone and PM standards, and areas that seek redesignation to attainment may use the reductions from this rule in future maintenance plans.

The heavy-duty vehicle and engine emission standards, along with the diesel fuel sulfur standard finalized today, will have a dramatic impact in

[9] Memo from Thomas M. Baines to Docket A–99–06, October 29, 1999, Docket #A–99–06, Item II–G–12.

[10] ''Process Begins to Develop Long term Agenda to Reduce Air Pollution from Vehicles and Fuels'', Environment Canada press release, May 26, 2000.

reducing the large contribution of HDVs to air pollution. These standards will result in substantial benefits to public health and welfare through significant annual reductions in emissions of NO_X, PM, NMHC, carbon monoxide, sulfur dioxide, and air toxics. For example, we project a 1.8 million ton reduction in NO_X emissions from HD vehicles in 2020, which will increase to 2.6 million tons in 2030 when the current HD vehicle fleet is completely replaced with newer HD vehicles that comply with these emission standards. When coupled with the emission reductions projected to result from the Phase 1 (model year 2004) HDV standards, the emission reductions from heavy-duty vehicles are projected to be as large as the substantial reductions the Agency expects from light-duty vehicles as a result of its recently promulgated Tier 2 rulemaking.

In sum, the Agency's air quality modeling and other evidence demonstrates that ambient concentrations of ozone, particulate matter, sulfur and nitrogen compounds, VOCs, air toxics, CO and diesel exhaust are anticipated to endanger public health, welfare and the environment in the time period between 2007 and 2030. Emission reductions expected from today's action are predicted to lessen future ambient concentrations of ozone and particulate matter and associated adverse public health and welfare effects.

B. Public Health and Welfare Concerns

1. Health and Welfare Concerns Raised During Public Hearings

The Agency received a significant number of comments on this section during the public hearings and in written comments from interested parties. Comments are addressed in this section as well as in the Response to Comment document that accompanies this action.

Throughout the five public hearings held around the country on the proposed heavy-duty engine and diesel fuel rule, the Agency received strong public support at each venue for increasing the stringency of heavy-duty truck and bus emission standards, and for further controls on sulfur in diesel fuel, in order to enable the necessary exhaust emission control. In addition to the 55,000 comments received from citizens in support of the Agency proposal to clean diesel fuel by mid-2006 and reduce emissions from diesel engines in 2007, we received 8,500 comments from citizens urging the Agency to act prior to 2007.

Public officials and representatives of environmental, public health, or community-based organizations testified regularly about the link between public health ailments, such as asthma and lung cancer, and air pollution caused by diesel exhaust and particulate matter. In different ways, many noted that the impact of diesel soot is compounded by the fact that it is discharged at street level where people live and breathe. A regular complaint was the close proximity of bus depots, transfer terminals, and heavily-trafficked roadways to homes and apartment buildings, and in particular, to hospitals, playgrounds and schools. A common theme revolved around the notion that since asthma is an incurable disease, it was of utmost importance to help reduce the severity and frequency of attacks by reducing environmental triggers such as ozone, particulate matter and diesel exhaust.

Major industries represented during these public hearings were the heavy-duty vehicle engine manufacturers, the oil industry, and the commercial truckers. While each had a different perspective, most supported the underlying intent of the proposal to improve public health and welfare, and some also supported the specific requirements as proposed. For those who objected to the proposal, the main thrust of their concerns related to the stringency and public health necessity of the new standards and the diesel fuel sulfur requirement. Largely in their written comments, these industries raised questions about the need for additional reductions in order to meet existing ozone and PM national ambient air quality standards and took exception with the Agency's characterization of diesel exhaust as a human carcinogen at environmental levels of exposure. Some industry commenters also challenged the Agency's reliance on public welfare and environmental effects such as visibility impairment and eutrophication of water bodies because the Agency had insufficiently quantified the benefits that would result from new standards on heavy-duty vehicles and diesel fuel.

The following subsections present the available information on the air pollution situation that is likely to exist without this rule for each ambient pollutant. We also present information on the improvement that is expected to result from this rule.

2. Ozone and Its Precursors

a. Health and Welfare Effects From Short-Term Exposures to Ozone

NO_X and VOC are precursors in the photochemical reaction which forms tropospheric ozone. A large body of evidence shows that ozone can cause harmful respiratory effects including chest pain, coughing, and shortness of breath, which affect people with compromised respiratory systems most severely. When inhaled, ozone can cause acute respiratory problems; aggravate asthma; cause significant temporary decreases in lung function of 15 to over 20 percent in some healthy adults; cause inflammation of lung tissue; produce changes in lung tissue and structure; may increase hospital admissions and emergency room visits; and impair the body's immune system defenses, making people more susceptible to respiratory illnesses. Children and outdoor workers are likely to be exposed to elevated ambient levels of ozone during exercise and, therefore, are at greater risk of experiencing adverse health effects. Beyond its human health effects, ozone has been shown to injure plants, which has the effect of reducing crop yields and reducing productivity in forest ecosystems.

There is strong and convincing evidence that exposure to ozone is associated with exacerbation of asthma-related symptoms. Increases in ozone concentrations in the air have been associated with increases in hospitalization for respiratory causes for individuals with asthma, worsening of symptoms, decrements in lung function and increased medication use. Studies have also indicated that exposure to particulate matter can be associated with altered lung function and increased respiratory symptoms, and asthmatic children are considered to be particularly sensitive to these effects. In addition, exposures to particulate matter or ozone have been shown to have a priming effect for responsiveness to allergens, with the pollutant exposure leading to heightened responses to allergens among allergic asthmatics. It is not believed, based on the current evidence, that exposure to outdoor pollutants such as ozone or particulate matter is a cause of asthma.

Asthma is one of the most common and costly diseases in the United States. According to the President's Task Force on Environmental Health Risks and Safety Risks to Children, America is in the midst of an asthma epidemic.[11]

[11] *Asthma and the Environment: A Strategy to Protect Children, President's Task Force on*

Since 1980, the number of asthma sufferers in the United States has more than doubled from 6.7 million to 17.3 million in 1998.[12] Today, more than 5 percent of the US population has asthma. On average, 15 people died every day from asthma in 1995, and the death rate has nearly tripled since 1975. In 1998, the cost of asthma to the U.S. economy was estimated to be $11.3 billion, with hospitalizations accounting for the single largest portion of the cost.[13] A recent report by the Pew Environmental Health Commission at Johns Hopkins School of Public Health estimates that by 2010, 22 million Americans will suffer from asthma, or one in 14 Americans and one in every five families.[14] At present, asthma cannot be cured, only controlled.

To address this growing public health problem, the President's Task Force on Environmental Health Risks and Safety Risks to Children ranked asthma as its highest priority. The President's Task Force created and charged the Asthma Priority Area Workgroup, co-chaired by EPA and the Department of Health and Human Services, with reviewing current Federal efforts to address the issue, and to make recommendations. In May, 2000, the Task Force issued a strategy that focused on developing a greater understanding of the role environmental factors associated with the onset of asthma; and triggers of asthma. The report found that ''children with asthma have long been recognized as particularly sensitive to outdoor air pollution,'' The report noted that ''25 percent of children in America live in areas that regularly exceed EPA limits for ozone.'' The first guiding principle was to focus efforts to ''eliminate the disproportionate impact of asthma in minority populations and those living in poverty.'' Testimony received during the Agency's five public hearings on this rule contained numerous references and detailed personal accounts as to the severe and sometimes fatal impact of asthma on the lives of American citizens.

b. Current and Future Nonattainment Status With the 1-Hour Ozone NAAQS

Today, ground level ozone remains a pervasive pollution problem in the United States. As of July, 2000, 102 million people (1999 census) lived in 31 metropolitan areas designated nonattainment under the 1-hour ozone NAAQS.[15] This is a sharp decline from the 101 nonattainment areas originally identified under the Clean Air Act Amendments of 1990, but elevated ozone concentrations remain a serious public health concern throughout the nation.

Over the last decade, declines in ozone levels were found mostly in urban areas, where emissions are heavily influenced by controls on mobile sources and their fuels.[16] Twenty-three metropolitan areas have realized a decline in ozone levels since 1989, but at the same time, ozone levels in 11 metropolitan areas with 7 million people have increased.[17] Regionally, California and the Northeast have recorded significant reductions in peak ozone levels, while four other regions (the Mid-Atlantic, the Southeast, the Central and Pacific Northwest) have seen ozone levels increase.

The highest ambient concentrations are currently found in suburban areas, consistent with downwind transport of emissions from urban centers. Concentrations in rural areas have risen to the levels previously found only in cities. Over the last decade, ozone levels at 17 of our National Parks have increased, and in 1998, ozone levels in two parks were 30 to 40 percent higher than the ozone NAAQS.

i. Results of Photochemical Ozone Modeling and Analysis of Emissions Inventories

In conjunction with this rulemaking, the Agency performed ozone air quality modeling for nearly the entire Eastern U.S covering metropolitan areas from Texas to the Northeast.[18] This ozone air quality modeling was based upon the same modeling system as was used in the Tier 2 air quality analysis, with the addition of updated inventory estimates for 2007 and 2030.[19] This modeling supports the conclusion that there is a broad set of areas with predicted ozone concentrations in 2007 and 2030 at or above 0.125 ppm, in the baseline scenarios without additional emission reductions. EPA established the 1-hour standard at 0.12 parts per million (ppm) daily maximum 1-hour average concentration not to be exceeded more than once per year on average. Compliance with the 1-hour standard is judged on the basis of the most recent three years of ambient air quality monitoring data.

We have compared and supplemented our own ozone modeling with other modeling studies, submitted to us as state implementation plan (SIP) revisions, or brought to our attention through our consultations with states on SIP revisions that are in development. The ozone modeling in the SIP revisions has the advantage of using emission inventories that are more specific to the area being modeled, and of using meteorological conditions selected specifically for each area. Also, the SIP revisions included other evidence and analysis, such as analysis of air quality and emissions trends, observation-based models that make use of data on concentrations of ozone precursors, alternative rollback analyses, and information on the responsiveness of the air quality model. For some areas, we decided that the predictions of 1-hour ozone exceedances from our modeling were less reliable than conclusions that could be drawn from this additional evidence and analysis. For example, in some areas our episodes did not capture the meteorological conditions that have caused high ozone, while local modeling did so. Thus, these local analyses are considered to be more extensive than our own modeling for estimating whether there would be NAAQS nonattainment without further emission reductions, when interpreted by a weight of evidence method which meets our guidance for such modeling.

Photochemical ozone modeling conducted for this rulemaking was based in part on updated national emissions inventories for all sources. National emission trends for NO_X

Environmental Health Risks and Safety Risks to Children, January 28, 1999, Revised May, 2000.

[12] *Asthma Prevention Program of the National Center for Environmental Health,* Centers for Disease Control and Prevention, ''At-A-Glance, 1999; Centers for Disease Control and Prevention, CDC, *Surveillance for Asthma—United States, 1960–1995,*'' MMWR 47 (No. SS-1) (April 1998).

[13] Asthma Statistics, National Institutes of Health, National, Heart, Lung, and Blood Institute, January, 1999.

[14] *Attack Asthma: Why America Needs A Public Health Defense System to Battle Environmental Threats,* Pew Environmental Health Commissions at the Johns Hopkins School of Public Health, June, 2000.

[15] Memorandum to Air Docket, September 18, 2000. Information on ozone nonattainment areas and populations as of July 31, 2000 from US EPA website www.epa.gov/airs/nonattn.html, USA Air Quality Nonattainment Areas, Office of Air Quality Planning and Standards.

[16] National Emissions Trends database.

[17] National Air Quality and Emissions Trends Report, 1998, March, 2000, at 28.

[18] EPA also performed ozone air quality modeling for the western United States but, as described further in the air quality technical support document, model predictions were well below corresponding ambient concentrations. Because of poor model performance for this region of the country, the results of western ozone modeling were not relied on for this rule.

[19] Consistent with a commitment expressed in the proposal, the Agency released the emissions inventory inputs for, and a description of, ozone modeling into the public record (docket number A–99–06), and also onto a website developed expressly for this purpose, on a continuous basis as they were developed. Further discussion of this modeling, including evaluations of model performance relative to predicted future air quality, is provided in the air quality modeling Technical Support Document (TSD).

predict a significant decline from 1996 to 2007, a leveling off of the downward trend between 2007 to 2020, and an increase in NO_X inventories from 2020 to 2030. By 2030, national NO_X levels are estimated to reach levels that are within ten percent of 2007 levels. Predictions of national VOC emissions indicate a reduction from 1996 to 2007, followed by an increase between 2007 and 2030 resulting in 2030 levels that are estimated to be 10 percent greater than VOC emissions levels in 2007. In metropolitan ozone nonattainment areas, such as Charleston, Chicago and Houston, NO_X or VOC emissions in 2030 are predicted to reach or exceed 2007 levels. These estimated national and metropolitan area emissions inventories of ozone precursors are consistent with the conclusions reached by analysis of ozone modeling conducted for this rule that additional reductions are needed in order to enable areas to reach and maintain attainment of the ozone standard between 2007 and 2030.

The Agency conducted ozone modeling based on inventories developed with and without reductions from this rulemaking for three future years: 2007, 2020 and 2030. The year 2007 was chosen because it is also the first year of implementation for the new standards adopted in today's action. It is also the year that nine major urban areas with a history of persistent and elevated ozone concentrations must demonstrate attainment, and is also relevant to the South Coast Air Basin of California (South Coast) with an attainment date of 2010. In addition, modeling was performed for 2030 when the full benefits of the rule are expected to be realized and for 2020 which represents an intermediate year between the start of the program and full turnover of the affected vehicle fleet. The year 2020 is also representative of the period when areas that have come into attainment may need additional reductions in order to maintain the standard.

Today's rule will provide a substantial reduction in emissions of ozone precursors, particularly NO_X. These emissions reductions will greatly lower ozone concentrations which will help federal and State efforts to bring about attainment of the current 1-hour ozone standard. As described in the Air Quality Modeling Technical Support Document for this rule, EPA performed regional scale ozone modeling for the Eastern U.S. to assess the impacts of the controls in this rule on predicted 1-hour ozone exceedances. The results of this modeling were examined for those 37 areas in the East for which EPA's modeling predicted exceedances in 2007, 2020 and/or 2030 and current 1-hour design values are above the standard or within 10 percent of the standard. The results for these areas combined indicate that there will be substantial reductions in the number of exceedances and the magnitude of high ozone concentrations in both 2020 and 2030 due to this rule. The modeling also indicates that without the rule, exceedances would otherwise increase by 37 percent between 2020 and 2030 as growth in emissions offsets the reductions from Tier 2 and other current control programs.

For all areas combined, the rule is forecast to provide a 33 percent reduction in exceedances in 2020 and a 38 percent reduction in 2030. The total amount of ozone above the standard is expected to decline by nearly 37 percent in 2020 and 44 percent in 2030. Also, daily maximum ozone exceedances are lowered by 5 ppb on average in 2020 and nearly 7 ppb in 2030. The modeling forecasts an overall net reduction of 39 percent in exceedances from 2007, which is close to the start of this program, to 2030 when controls will be fully in place. In addition, the results for each individual area indicates that all areas are expected to have fewer exceedances in 2030 with the HDV controls than without this rule.

During the public comment period on the proposed rule, EPA received several comments that expressed concern about potential increases in ozone that might result from this rule. As indicated above, the air quality modeling results indicate an overall reduction in ozone levels in 2007 and 2030 during the various episodes modeled. Examining individual areas, nearly the entire country is projected to benefit substantially from the reductions in this rule.[20] There is a metropolitan area that EPA modeled as having exceedances with the one-hour ozone standard under baseline conditions in 2007 through 2030, which the Agency's modeling for the HDV rule estimated could have less than a 3 percent increase in its peak ozone levels in 2020 and 2030 and small net increase (i.e., less than 1 ppb) in levels above the 1-hour standard in 2030. However, EPA's air quality modeling did not predict an increase in the number of exceedances in this CMSA/MSA in 2020 and a decrease in exceedances occurred in 2030. In another CMSA/MSA in another State, in 2030 there was less than a one percent increase in the summer peak level. Yet, this area had fewer exceedances and lower ozone above the 1-hour standard in both 2020 and 2030 under the rule. EPA expects that the States will have State Implementation Plans that will consider federal controls and complement them with State actions to provide attainment and will work with the States to ensure this occurs.

Considering all of EPA's air quality modeling results, it is clear that the significant ozone reductions from this rule outweigh the limited ozone increases that may occur in the future assuming no additional reductions from federal or local controls. Additional details on this are provided in the Response to Comments document and in EPA's Heavy Duty Rule Air Quality Modeling Technical Support Document. Furthermore, EPA's Regulatory Impact Analysis for this rule shows significant health and welfare benefits occurring from the ozone reductions that the rule provides (see details on the benefits in Section V.F.5 of the preamble and Chapter VII of the RIA).

ii. Areas At Risk of Exceeding the 1-Hour Ozone Standard in the Future

This section presents the Agency's conclusions about the risk of future nonattainment for 45 areas listed in Table II.B–1 based on photochemical ozone modeling conducted for this rule and other evidence such as local air quality modeling.[21] The areas listed in Table II.B–1 are separated into two broad groups: (1) Those areas with attainment dates in 2007 or 2010 that will benefit from reductions from this rule to attain and maintain the standard; and (2) those areas with attainment dates prior to 2007 that will benefit from reductions from this rule to maintain the standard after their attainment dates. Because ozone concentrations causing violations of the 1-hour ozone standard are well established to endanger public health and welfare, this indicates that it is appropriate for the Agency to set new standards for heavy-duty vehicles. The following discussion follows these groupings from top to bottom. A more detailed discussion is found in the Regulatory Impact Analysis (RIA).

Ten metropolitan areas contained within designated ozone nonattainment areas have statutorily-defined attainment dates of 2007 or 2010, or

[20] The air quality modeling was performed for the Eastern region of the United States, but EPA also expects the rule to benefit nonattainment areas throughout the entire nation, including California.

[21] In the proposal, we relied on photochemical ozone modeling performed for recently promulgated standards on light duty vehicles, or Tier 2. The results presented in this final rulemaking for heavy-duty vehicles and diesel fuel are largely consistent with the findings presented in the proposal, with small differences due to updated emissions inventories. As stated in the proposal, the ozone modeling methodologies used in the proposal and presented here in the final rule are identical.

have requested attainment date extensions to 2007. These 10 areas are listed at the top of Table II.B–1, and are New York City, Houston, Hartford, New London, Chicago, Milwaukee, Dallas, Beaumont-Port Arthur, Los Angeles, and Southeast Desert.

Each of these areas needs additional emission reductions in order to reach attainment by 2007, and to maintain the standards in the future. Some of these areas have emission reduction shortfalls that are identified in their attainment demonstrations (*i.e.,* South Coast Air Basin, New York and Houston), and reductions from this rule will assist State efforts to reach attainment.[22] Three other areas—Southeast Desert, Hartford, New London—are subject to ozone transport from upwind areas with identified shortfalls (South Coast and New York), and depend upon attainment from these upwind areas to reach attainment themselves. We have received attainment plans for two areas in Texas (Dallas and Beaumont-Port Arthur), and the Agency is likely to consider the reductions from this rule in its proposed approval of these attainment plans in **Federal Register** notices. Finally, there are two areas in the Midwest—Chicago and Milwaukee—that have incorporated reductions from this rule into their regional ozone modeling, and plan to rely on reductions from this rule to support their 2007 attainment demonstration.[23]

For all ten areas, even if all shortfalls were filled by the States, there is some risk that at least some of the areas will not attain the standards by their attainment dates of 2007, or 2010 for Los Angeles. In that event, the reductions associated with this program, which increase substantially after 2007, will help assure that any residual failures to attain are remedied. Finally, there is also some risk that the areas will be unable to maintain attainment after 2007. Considered collectively, there is a significant risk that some areas will not be in attainment throughout the period when the new standards will reduce heavy-duty vehicle emissions.

The rest of the areas have required attainment dates prior to 2007, or have no attainment date but are subject to a general obligation to have a SIP that provides for attainment and maintenance. These 34 areas, according to our modeling, are at risk of exceeding the ozone NAAQS between 2007 and 2030. These areas will be able to rely on reductions from this rule to continue to maintain the standard after attainment is reached, and will be able to take credit for this program in their maintenance plans when they seek redesignation to attainment of the ozone standard. If any of these areas reach attainment, and then fall back into nonattainment, or fail to reach attainment by 2007, reductions from this rule will assist these areas in achieving the ozone standard. If an area does not choose to seek redesignation, the continuing reductions from this rulemaking will help ensure maintenance (*i.e.,* prevent future exceedances) with the 1-hour standard after initial attainment is reached.

Areas with attainment dates prior to 2007 are presented in two groupings in the table at the end of this section: a group of 20 areas in the middle of Table II.B–1, and a group of 15 areas at the bottom of Table II.B–1. For the middle group of 20 areas, EPA and the States are pursuing the established statutory processes for attaining and maintaining the ozone standard, or have already redesignated these areas to attainment with a maintenance plan (*e.g.,* Cincinnati). EPA has re-instated the 1-hour ozone standard to some of these areas, restoring the applicability of these processes to them. The Agency believes that there is a significant risk that future air quality in a number of these areas will exceed the ozone standard at some time in the 2007 and later period. This belief is based on three factors: (1) Recent exceedances in 1997–1999, (2) predicted exceedances in 2007, 2020 or 2030 after accounting for existing mobile source requirements and other local or regional controls currently in place or required, and (3) our assessment of the magnitude of recent violations, the year-to-year variability of meteorological conditions conducive to ozone formation, transport from areas with later attainment dates, and other variables inherent in predicting future attainment such as the potential for some areas to experience unexpectedly high economic growth rates, growth in vehicle miles traveled, varying population growth from area to area, and differences in vehicle choice.

Only a subset of these 20 areas have yet adopted specific control measures that have allowed the Agency to fully approve an attainment plan. For some of these areas, we have proposed a finding, based on all the available evidence, that the area will attain by its applicable attainment date. We have approved a 10-year maintenance plan for Cincinnati, OH from 1999 to 2009. However, in many cases, these proposals depend on the State adopting additional emission reduction measures. The RIA provides more information on our recent proposals on attainment demonstrations and maintenance plans.[24] Until the SIPs for these areas are actually submitted, reviewed and approved by EPA, there is some risk that these areas will not adopt fully approvable SIPs.

Finally, there are 15 additional metropolitan areas for which the available ozone modeling and other evidence is less clear regarding the need for additional reductions (see Table II.B–1). Our ozone modeling predicted these areas to need further reductions to avoid exceedances in 2007, 2020 or 2030. The recent air quality monitoring data for these areas shows ozone levels with less than a 10 percent margin below the NAAQS. We believe there is a risk that future ozone levels will be above the NAAQS because of the year-to-year variability of meteorological conditions conducive to ozone formation, or because local emissions inventories may increase faster than national inventories.

iii. Conclusion

In sum, without these reductions, there is a significant risk that an appreciable number of the 45 areas, with a population of 128 million people in 1999, will violate the 1-hour ozone standard during the time period when these standards will apply to heavy-duty vehicles. The evidence summarized in this section, and presented in more detail in the air quality modeling TSD and the RIA, supports the Agency's belief that emissions of NO_X and VOC from heavy-duty vehicles in 2007 and later will contribute to a national ozone air pollution problem that warrants regulatory action under section 202(a)(3) of the Act.

[22] The South Coast's ''additional measures'' which rely on new technologies, are located in its 1994 SIP.

[23] Technical Support Document, Midwest Subregional Modeling: 1-Hour Attainment Demonstration for Lake Michigan Area and Emissions Inventory, Illinois Environmental Protection Agency, Indiana Department of Environmental Management, Michigan Department of Environmental Quality, Wisconsin Department of Natural Resources, September 27, 2000, at 14 and at 8.

[24] We have recently proposed favorable action, in some cases with a condition that more emission reductions be obtained, on attainment demonstrations in these areas with attainment dates prior to 2007: Philadelphia, Washington-Baltimore, Atlanta, and St. Louis.

TABLE II.B–1 [a]

[Areas and 1999 Populations at Risk of Exceeding the Ozone Standard between 2007 and 2030]

MSA/CMSA/State	1999 Population (in millions)
Areas with 2007/2010 Attainment Dates (Established or Requested)	
Beaumont-Port Arthur, TX	0.4
Chicago-Gary-Kenosha, IL–IN–WI	8.9
Dallas-Fort Worth, TX	4.9
Hartford, CT	1.1
Houston-Galveston-Brazoria, TX	4.5
Los Angeles-Riverside-Orange County, CA	16.0
Milwaukee-Racine, WI	1.6
New London-Norwich, CT–RI	0.3
New York-Northern New Jersey-Long Island, NY–NJ–CT–PA	20.2
Southeast Desert, CA	0.5
10 areas	58.4
Areas with Pre-2007 Attainment Dates or No Specific Attainment Date, with a Recent History of Nonattainment.	
Atlanta, GA	3.9
Baton Rouge, LA	0.6
Birmingham, AL	0.9
Boston-Worcester-Lawrence, MA–HN–ME–CT	5.7
Charlotte-Gastonia-Rock Hill, NC–SC	1.4
Detroit-Ann Arbor-Flint, MI MSA	5.5
Huntington-Ashland, WV–KY–OH	0.3
Louisville, KY–IN	1.0
Macon, GA MSA	0.3
Memphis, TN–AR–MS	1.1
Nashville, TN	1.2
Philadelphia-Wilmington-Atlantic City, PA–NJ–DE–MD	6
Richmond-Petersburg, VA	1
Sacramento-Yolo, CA	1.7
San Diego, CA	2.8
San Francisco-Oakland-San Jose, CA	6.9
San Joaquin Valley, CA	3.2
St. Louis, MO–IL	2.6
Ventura County, CA	0.7
Washington, DC—Baltimore, DC, MD, VA MSA	7.4
20 Areas	54.2
Areas with Pre-2007 Attainment Dates and Recent Concentrations within 10 percent of an Exceedance.	
Barnstable-Yarmouth, MA	0.2
Benton Harbor, MI	0.2
Biloxi-Gulfport-Pascagoula, MS MSA	0.4
Charleston, WV MSA	0.3
Cincinnati-Hamilton, OH–KY–IN	2.0
Cleveland-Akron, OH CMSA	2.9
Grand Rapids-Muskegon-Holland, MI MSA	1.1
Houma, LA	0.2
Lake Charles, LA	0.2
New Orleans, LA MSA	1.3
Norfolk-Virginia Beach-Newport News, VA–NC MSA	1.6
Orlando, FL MSA	1.5
Pensacola, FL MSA	0.4
Providence-Fall River-Warwick, RI–MA	1.1
Tampa-St. Petersburg-Clearwater, FL MSA	2.3
15 areas	15.7
Total Areas: 45	Population: 128

[a] In order to determine the reliability of model predictions the Agency ran the ozone model for current ozone concentrations and compared those predictions with actual ozone levels recorded by ozone monitors. The results of the model's performance are presented in the RIA for this rule.

c. Public Health and Welfare Concerns from Prolonged and Repeated Exposures to Ozone

A large body of scientific literature regarding health and welfare effects of ozone has associated health effects with certain patterns of ozone exposures that do not necessarily include any hourly ozone concentration above the 0.12 parts per million (ppm) level of the 1-hour NAAQS. The science indicates that there are health effects attributable to prolonged and repeated exposures to lower ozone concentrations. Studies of 6 to 8 hour exposures showed health effects from prolonged and repeated exposures at moderate levels of exertion to ozone concentrations as low as 0.08 ppm. Prolonged and repeated ozone concentrations at these levels are common in areas throughout the country, and are found in areas that are exceeding, and areas that are not exceeding, the 1-hour ozone standard. For example, 153 million people, or 87 percent of the total population in counties evaluated (176 million), lived in areas with 2 or more days with concentrations of 0.09 ppm or higher in 1998, including areas currently violating the 1-hour NAAQS. In the 2007, before the application of emission reductions resulting from this rule, we estimated that 116 million, or 93 percent of the total population considered in the analysis, are predicted to live in areas with at least 2 days with model-adjusted 8-hour average concentrations of 0.08 ppm or higher. By 2030, the number of people (139 million) and the relative percentage (91 percent) of the total population considered in the analysis is projected to grow significantly without reductions from this rule. Since prolonged exposures at moderate levels of ozone are more widespread than exceedances of the 1-hour ozone standard, and given the continuing nature of the 1-hour ozone problem described above, adverse health effects from this type of ozone exposure can reasonably be anticipated to occur in the future in the absence of this rule. Adverse welfare effects can also be anticipated, primarily from damage to vegetation. See the RIA for further details.

Studies of acute health effects have shown transient pulmonary function responses, transient respiratory symptoms, effects on exercise performance, increased airway responsiveness, increased susceptibility to respiratory infection, increased hospital and emergency room visits, and transient pulmonary respiratory inflammation. Such acute health effects have been observed following prolonged exposures at moderate levels of exertion at concentrations of ozone well below the current standard of 0.12 ppm. The effects are more pronounced at concentrations above 0.09 ppm, affecting more subjects or having a greater effect on a given subject in terms of functional changes or symptoms. A more detailed discussion may be found in the RIA.

With regard to chronic health effects, the collective data have many ambiguities, but provide suggestive evidence of chronic effects in humans. There is a biologically plausible basis for considering the possibility that repeated inflammation associated with exposure to ozone over a lifetime, as can occur with prolonged exposure to moderate ozone levels below peak levels, may result in sufficient damage to respiratory tissue that individuals later in life may experience a reduced quality of life, although such relationships remain highly uncertain.

Ozone has many welfare effects, with damage to plants being of most concern. Plant damage affects crop yields, forestry production, and ornamentals. The adverse effect of ozone on forests and other natural vegetation can in turn cause damage to associated ecosystems, with additional resulting economic losses, as well as aesthetic impacts which may not be fully quantifiable in economic terms. Ozone concentrations of 0.10 ppm can be phytotoxic to a large number of plant species, and can produce acute injury and reduced crop yield and biomass production. Ozone concentrations at or below 0.10 ppm have the potential over a longer duration of creating chronic stress on vegetation that can result in reduced plant growth and yield, shifts in competitive advantages in mixed populations, decreased vigor, and injury from other environmental stresses.

Section 202(a) provides EPA with authority to promulgate standards applicable to motor vehicle emissions that ''in the Administrator's judgment, cause or contribute to air pollution reasonably anticipated to endanger public health and welfare.'' The evidence in the RIA regarding the occurrence of adverse health effects due to prolonged and repeated exposure to ozone concentrations in the range discussed above, and regarding the populations that are expected to receive exposures at these levels, along with the welfare effects described above, supports a conclusion that emissions of NO_X and VOC from heavy-duty vehicles in 2007 and later will be contributing to a national air pollution problem that warrants regulatory action under section 202(a) of the Act.

3. Particulate Matter

a. Health and Welfare Effects

Particulate matter (PM) represents a broad class of chemically and physically diverse substances. It can be principally characterized as discrete particles that exist in the condensed (liquid or solid) phase spanning several orders of magnitude in size. All particles equal to and less than 10 microns are called PM_{10}. Fine particles can be generally defined as those particles with an aerodynamic diameter of 2.5 microns or less (also known as $PM_{2.5}$), and coarse fraction particles are those particles with an aerodynamic diameter greater than 2.5 microns, but equal to or less than a nominal 10 microns. The health and environmental effects of PM are strongly related to the size of the particles.

The emission sources, formation processes, chemical composition, atmospheric residence times, transport distances and other parameters of fine and coarse particles are distinct. Fine particles are directly emitted from combustion sources and are formed secondarily from gaseous precursors such as sulfur dioxide, nitrogen oxides, or organic compounds. Fine particles are generally composed of sulfate, nitrate, chloride and ammonium compounds; organic and elemental carbon; and metals. Combustion of coal, oil, diesel, gasoline, and wood, as well as high temperature process sources such as smelters and steel mills, produce emissions that contribute to fine particle formation. In contrast, coarse particles are typically mechanically generated by crushing or grinding and are often dominated by resuspended dusts and crustal material from paved or unpaved roads or from construction, farming, and mining activities. Fine particles can remain in the atmosphere for days to weeks and travel through the atmosphere hundreds to thousands of kilometers, while coarse particles deposit to the earth within minutes to hours and within tens of kilometers from the emission source.

Diesel particles are a component of both coarse and fine PM, but fall mostly in the fine and ultrafine size range.[25] Diesel PM contains small quantities of numerous mutagenic and carcinogenic compounds. While representing a very small portion (less than one percent) of the national emissions of metals, and a small portion of diesel particulate matter (one to five percent), we note that several toxic trace metals of potential

[25] Fine particulate matter includes particles with a diameter less than 2.5 micrometers. Ultrafine particulate matter include particles with a diameter less than 100 nanometers.

toxicological significance are also emitted by diesel engines including chromium, manganese, mercury and nickel. In addition, small amounts of dioxins have been measured in diesel exhaust, some of which may partition into the particle phase, though the impact of these emissions on human health is not clear.

Particulate matter, like ozone, has been linked to a range of serious respiratory health problems. Scientific studies suggest a likely causal role of ambient particulate matter (which is attributable to a number of sources including diesel) in contributing to a series of health effects. The key health effects categories associated with ambient particulate matter include premature mortality, aggravation of respiratory and cardiovascular disease (as indicated by increased hospital admissions and emergency room visits, school absences, work loss days, and restricted activity days), aggravated asthma, acute respiratory symptoms, including aggravated coughing and difficult or painful breathing, chronic bronchitis, and decreased lung function that can be experienced as shortness of breath. Observable human noncancer health effects associated with exposure to diesel PM include some of the same health effects reported for ambient PM such as respiratory symptoms (cough, labored breathing, chest tightness, wheezing), and chronic respiratory disease (cough, phlegm, chronic bronchitis and suggestive evidence for decreases in pulmonary function). Symptoms of immunological effects such as wheezing and increased allergenicity are also seen. Studies in rodents, especially rats, show the potential for human inflammatory effects in the lung and consequential lung tissue damage from chronic diesel exhaust inhalation exposure. Both fine and coarse particles can accumulate in the respiratory system. Exposure to fine particles is most closely associated with such health effects as premature mortality or hospital admissions for cardiopulmonary disease. For additional information on health effects, see the RIA. PM also causes damage to materials and soiling of commonly used building materials and culturally important items such as statutes and works of art. It is a major cause of substantial visibility impairment in many parts of the U.S.

Heavy-duty vehicles contribute to particle formation through a number of pollutants. The contribution to PM fine varies by region of the country. Sulfate plays a major role in the composition of fine particulate across the country, but typically makes up over half the fine particles found in the Eastern United States. Organic carbon accounts for a large portion of fine particle mass, with a slightly higher fraction in the west. Diesel engines are the principal source of elemental carbon, which makes up about 5–6 percent of particle mass. Nationally, nitrate plays a relatively small role in the make up of fine particles, but ammonium nitrate plays a far larger role in southern California. Ammonium nitrate–formed secondarily from NO_X and ammonia emissions—is one of the most significant components of particulate matter pollution in California. During some of the worst episodes of elevated particle levels in the South Coast, ammonium nitrate can account for about 65–75 percent of the $PM_{2.5}$ mass. Reducing ammonium nitrate through controls on NO_X sources is a critical part of California's particulate matter strategy. Nationally, the standards finalized in this rule will significantly reduce HDV emissions of SO_X, NO_X, VOCs and elemental carbon, and thus contribute to reductions in ambient concentrations of PM_{10} and $PM_{2.5}$.

b. Attainment and Maintenance of the PM_{10} NAAQS

Under the CAA, we are to regulate HDV emissions if they contribute to air pollution that can reasonably be anticipated to endanger public health and welfare. We have already addressed the question of what concentration patterns of PM endanger public health, in setting the NAAQS for PM_{10} in 1987. The PM NAAQS were revised in 1997, largely by adding new standards for fine particles ($PM_{2.5}$) and modifying the form of the daily PM_{10} standard. On judicial review, the revised standards were remanded for further proceedings, and the revised PM_{10} standards were vacated. The Supreme Court is currently reviewing that decision. Oral arguments were held on November 7, 2000 and a decision by the Court is expected in 2001. Pending final resolution of the litigation, the 1987 PM_{10} standard is the applicable NAAQS for PM_{10}.

Commenters questioned the need for additional PM_{10} reductions in order to achieve attainment with the PM_{10} NAAQS, and questioned the Agency's statement that, unlike ozone, PM_{10} emissions are projected to increase in the future. Commenters are correct that significant progress has occurred over the last decade,[26] but the Agency's statement was based on projected PM_{10} inventory increases in the future between 1996 and 2030. During this period, inventory trends for current PM_{10} nonattainment areas, or those with concentrations within 10 percent of the standard, are predicted to increase significantly. For example, from 1996 to 2030, increases are predicted in Clark County (Las Vegas) of 41 percent, Harris County (Houston) of 37 percent, and Phoenix of 24 percent. A more detailed discussion is provided in the RIA.

i. Current PM_{10} Nonattainment

The most recent PM_{10} monitoring data indicates that 14 designated PM_{10} nonattainment areas with a projected population of 23 million violated the PM_{10} NAAQS in the period 1997–1999. Table II.B–3 lists the 14 areas, and also indicates the PM_{10} nonattainment classification and 1999 projected population for each PM_{10} nonattainment area. The projected population in 1999 was based on 1990 population figures which were then increased by the amount of population growth in the relevant county from 1990 to 1999.

TABLE II.B–3.—PM_{10} NONATTAINMENT AREAS VIOLATING THE PM_{10} NAAQS IN 1997–99

Area	Classification	1999 Population (projected, in millions)
Hayden/Miami, AZ	Moderate	0.004
Phoenix, AZ	Serious	2.977
Nogales, AZ	Moderate	0.025
San Joaquin Valley, CA	Serious	3.214
Imperial Valley, CA	Moderate	0.122

[26] Ambient concentrations of PM_{10} and PM_{10} emissions have declined over the last ten years by 25 percent and 19 percent, respectively. National Air Quality and Emissions Trends Report, 1998, US EPA, March, 2000.

TABLE II.B–3.—PM_{10} NONATTAINMENT AREAS VIOLATING THE PM_{10} NAAQS IN 1997–99—Continued

Area	Classification	1999 Population (projected, in millions)
Owens Valley, CA	Serious	0.018
Searles Valley, CA	Moderate	0.029
Coachella Valley, CA	Serious	0.239
South Coast Air Basin	Serious	14.352
Las Vegas, NV	Serious	1.200
Reno, NV	Moderate	0.320
Anthony, NM [b]	Moderate	0.003
El Paso, TX [a]	Moderate	0.611
Wallula, WA [b]	Moderate	0.052
Total Areas: 14		23.167

[a] EPA has determined that continuing PM_{10} nonattainment in El Paso, TX is attributable to international transport under section 179(B).
[b] The violation in this area has been determined to be attributable to natural events under section 188(f) of the Act.

In addition to the 14 PM_{10} nonattainment areas that are currently violating the PM_{10} NAAQS, there are 25 unclassifiable areas that have recently recorded ambient concentrations of PM_{10} above the PM_{10} NAAQS. EPA adopted a policy in 1996 that allows areas with PM_{10} exceedances that are attributable to natural events to retain their designation as unclassifiable if the State is taking all reasonable measures to safeguard public health regardless of the sources of PM_{10} emissions. Areas that remain unclassifiable areas are not required under the Clean Air Act to submit attainment plans, but we work with each of these areas to understand the nature of the PM_{10} problem and to determine what best can be done to reduce it. With respect to the monitored violations reported in 1997–99 in the 25 areas designated as unclassifiable, we have not yet excluded the possibility that factors such as a one-time monitoring upset or natural events, which ordinarily would not result in an area being designated as nonattainment for PM_{10}, may be responsible for the problem. Emission reductions from today's action will assist these currently unclassifiable areas to achieve ambient PM_{10} concentrations below the current PM_{10} NAAQS.

ii. Risk of Future Exceedances of the PM_{10} Standard

The new standards for heavy-duty vehicles will benefit public health and welfare through reductions in direct diesel particles and NO_X, VOCs, and SO_X which contribute to secondary formation of particulate matter. Because ambient particle concentrations causing violations of the PM_{10} standard are well established to endanger public health and welfare, this information supports the new standards for heavy-duty vehicles. The reductions from today's rule will assist States as they work with the Agency through implementation of local controls including development and adoption of additional controls as needed to move their areas into attainment by the applicable deadline, and maintain the standards thereafter.

The Agency's PM inventory analysis performed for this rulemaking predicts that without additional reductions 10 areas face a significant risk of failing to meet or to maintain the PM_{10} NAAQS even with federal, State and local controls currently in place.[27] Table II.B–4 presents information about these 10 areas and subdivides them into two groups. The first group of 6 areas are designated PM_{10} nonattainment areas which had recent monitored violations of the PM_{10} NAAQS in 1997–1999 and increasing inventories of PM_{10} from 2007 to 2030 (see Table II.B–3 for predicted increases in emissions). These areas have a population of 19 million. Included in the group are the nonattainment areas that are part of the Los Angeles, Phoenix and Las Vegas (Clark County) metropolitan areas, where traffic from heavy-duty vehicles is substantial. These six areas will benefit from the reductions in emissions that will occur from the new standards for heavy-duty vehicles, as will other areas impacted by heavy-duty vehicle emissions.

The second group of four counties listed in Table II.B–4 with a total of nine million people in 1999 also had predicted exceedances of the PM_{10} standard. While these four areas registered, in either 1997 or 1998, single-year annual average monitored PM_{10} levels of at least 90 percent of the PM_{10} NAAQS, these areas did not exceed the formal definition of the PM_{10} NAAQS over the three-year period ending in 1999. For each of these four areas (i.e., Cuyahoga, Harris, New York, and San Diego), inventories of total PM_{10} are predicted to increase between 1996, when these areas recorded values within 10 percent of the PM_{10} standard, and 2030 when this rule will take full effect. Additionally, EPA is in the process of taking final action on a request by the State of Ohio to redesignate Cuyahoga County as attainment. This action is based on locally developed information and is consistent with the requirements of the CAA which include, among other requirements a 10-year plan for maintenance of the PM_{10} standard.

For some of these areas, total PM_{10} inventories are predicted to decline or stay relatively constant from 1996 to 2007, and then increase after 2007. Based on inventory projections, the small margin of attainment which the four areas currently enjoy will likely erode between 1996 and 2030, and for some areas before 2007, if additional actions to reduce the growth of future emissions are not taken. We therefore consider these four areas to each individually have a significant risk of exceeding the PM_{10} standard between 2007 and 2030 without further emission reductions. The emission reductions from the new standards for heavy-duty vehicles will help these areas attain and maintain the PM_{10} NAAQS in conjunction with other processes that

[27] EPA has evaluated projected emissions for this analysis rather than future air quality because REMSAD, the model EPA has used for analyses related to this rule, was designed principally to estimate long-term average concentrations of fine particulate matter and its ability to predict short-term PM_{10} concentrations has not been satisfactorily demonstrated. In contrast with ozone, which is the product of complex photochemical reactions and therefore difficult to directly relate to precursor emissions, ambient PM_{10} concentrations are more heavily influenced by direct emissions of particulate matter and can therefore be correlated more meaningfully with emissions inventories.

are currently moving these areas towards attainment.

TABLE II.B–4—AREAS WITH SIGNIFICANT RISK OF EXCEEDING THE PM_{10} NAAQS WITHOUT FURTHER EMISSION REDUCTIONS BETWEEN 2007 AND 2030

Area	Percent increases in PM_{10} emissions (1996–2030)	1999 Population (projected) (millions)
Areas currently exceeding the PM_{10} standard:		
Clark Co., NV (Las Vegas)	41	1.217
El Paso, TX [a]	14	0.611
Hayden/Miami, AZ	4	0.004
Los Angeles South Coast Air Basin, CA	14	14.352
Nogales, AZ	3	0.025
Phoenix, AZ	24	3.012
Subtotal for 6 Areas	.....	19.22
Areas within 10% of exceeding the PM_{10} standard:		
Cuyahoga Co., OH (Cleveland)	28	1.37
Harris, Co., TX (Houston)	37	3.26
New York Co., NY	14	1.55
San Diego Co., CA	13	2.83
Subtotal for 4 Areas	.....	9.01
10 Areas	.....	28.23

[a] EPA has determined that PM_{10} nonattainment in this area is attributable to international transport. While reductions in heavy-duty vehicle emissions cannot be expected to result in attainment, they will help reduce the degree of PM_{10} nonattainment.

EPA recognizes that the SIP process is ongoing and that nonattainment areas are in the process of implementing, or will be adopting and implementing, additional control measures to achieve the PM_{10} NAAQS in accordance with their attainment dates under the Clean Air Act. EPA believes, however, that as in the case of ozone, there are uncertainties inherent in any demonstration of attainment that is premised on forecasts of emission levels in future years. Even if these areas adopt and submit SIPs that EPA is able to approve as demonstrating attainment of the PM_{10} standard, and attain the standard by the appropriate attainment dates, the inventory analysis conducted for this rule and the history of PM_{10} levels in these areas indicates that there is still a significant risk that these areas will need the reductions from the heavy-duty vehicle standards adopted today to maintain the PM_{10} standards in the long term (ie, between 2007 and 2030). In addition, this list does not fully consider the possibility that there are other areas which are now meeting the PM_{10} NAAQS that have at least a significant probability of requiring further reductions to continue to maintain it.

c. Public Health and Welfare Concerns From Exposure to Fine PM

Many epidemiologic studies have shown statistically significant associations of ambient PM levels with a variety of human health endpoints in sensitive populations, including mortality, hospital admissions and emergency room visits, respiratory illness and symptoms measured in community surveys, and physiologic changes in mechanical pulmonary function. These effects have been observed in many areas with ambient PM levels at or below the current PM_{10} NAAQS. The epidemiologic science points to fine PM as being more strongly associated with some health effects, such as premature mortality, than coarse PM.

Associations of both short-term and long-term PM exposure with most of the above health endpoints have been consistently observed. The general internal consistency of the epidemiologic data base and available findings have led to increasing public health concern, due to the severity of several studied endpoints and the frequent demonstration of associations of health and physiologic effects with ambient PM levels at or below the current PM_{10} NAAQS. The weight of epidemiologic evidence suggests that ambient PM exposure has affected the public health of U.S. populations. Specifically, increased mortality associated with fine PM was observed in cities with longer-term average fine PM concentrations in the range of 16 to 21 $\mu g/m^3$.

Current 1999 $PM_{2.5}$ monitored values, which cover about a third of the nation's counties, indicate that at least 40 million people live in areas where long term ambient fine particulate matter levels are at or above 16 $\mu g/m^3$ (37 percent of the population in the areas with monitors), which is the low end of the range of long term average $PM_{2.5}$ concentrations in cities where statistically significant associations were found with serious health effects, including premature mortality (EPA, 1996).[28]

The Agency used the Regulatory Model System for Aerosols and Desposition (REMSAD) to model baseline and post-control ambient PM concentrations. For a description of the REMSAD model, the reader is referred to Chapter VII of the RIA.

Our REMSAD modeled predictions allow us to also estimate the affected population for the counties which do not currently have $PM_{2.5}$ monitors. According to our national modeled predictions, there were a total of 76

[28] EPA (1996) Review of the National Ambient Air Quality Standards for Particulate Matter: Policy Assessment of Scientific and Technical Information OAQPS Staff Paper. EPA–452/R–96–013.

million people (1996 populations) living in areas with modeled annual average $PM_{2.5}$ concentrations at or above 16 μg/m^3 (29 percent of the population).[29]

The REMSAD model also allows us to estimate future $PM_{2.5}$ levels. However, the most appropriate method of making these projections relies on the model to predict changes between current and future states. Thus, we have estimated future conditions only for the areas with current $PM_{2.5}$ monitored data (which, as just noted, covers about a third of the nation's counties). For these counties, REMSAD predicts the current level of 37 percent of the population living in areas where fine PM levels are at or above 16 μg/m^3 to increase to 59 percent in 2030.

It is reasonable to anticipate that sensitive populations exposed to similar or higher levels, now and in the 2007 and later time frame, will also be at increased risk relative to the general population of premature mortality associated with exposures to fine PM. In addition, statistically significant relationships have also been observed in U.S. cities between PM levels and increased respiratory symptoms and decreased lung functions in children.

Since EPA's examination in the mid-1990s of the epidemiological and toxicological evidence of the health effects of PM, many new studies have been published that reevaluate or extend the initial research. The Agency is currently reviewing these new studies to stay abreast of the literature and adjust as necessary its assessment of PM's health effects. It is worth noting that within this new body of scientific literature, there are two new studies funded by the Health Effects Institute, a EPA-industry jointly funded group, that have generally confirmed the mid-1990s findings of the Agency about the association of fine particles and premature mortality and various other respiratory and cardiovascular effects. HEI's *National Morbidity, Mortality and Air Pollution Study* (NMMAPS), evaluated associations between air pollutants and mortality in 90 U.S. cities, and also evaluated associations between air pollutants and hospital admissions among the elderly in 14 U.S. cities.[30] In HEI's *Reanalysis of the Harvard Six Cities Study and the American Cancer Society Study of Particulate Air Pollution and Mortality,* data were obtained from the original investigators for two previous studies.[31] [32], The extensive analyses included replication and validation of the previous findings, as well as sensitivity analyses using alternative analytic techniques, including different methods of covariate adjustment, exposure characterization, and exposure-response modeling.[33]

Section 202(a) provides EPA with independent authority to promulgate standards applicable to motor vehicle emissions that ''in the Administrator's judgment, cause or contribute to air pollution reasonably anticipated to endanger public health and welfare.'' The body of health evidence is supportive of our view that PM exposures are a serious public health concern. This concern exists for current exposures as well as exposures that can reasonably be anticipated to occur in the future. The risk is significant from an overall public health perspective because of the large number of individuals in sensitive populations that we expect to be exposed to ambient fine PM in the 2007 and later time frame, as well as the importance of the negative health effects. This information warrants a requirement to reduce emissions from heavy-duty vehicles, to address elevated levels of fine PM. This evidence supports EPA's conclusion that emissions from heavy-duty vehicles that lead to the formation of fine PM in 2007 and later will be contributing to a national air pollution problem that warrants action under section 202(a)(3).

d. Other Welfare Effects Associated with PM

The deposition of airborne particles reduces the aesthetic appeal of buildings, and promotes and accelerates the corrosion of metals, degrades paints, and deteriorates building materials such as concrete and limestone. This materials damage and soiling are related to the ambient levels of airborne particulates, which are emitted by heavy-duty vehicles. Although there was insufficient data to relate materials damage and soiling to specific concentrations, and thereby to allow the Agency to establish a secondary PM standard for these impacts, we believe that the welfare effects are real and that heavy-duty vehicle PM, NO_X, SO_X, and VOC contribute to materials damage and soiling.

e. Conclusions Regarding PM

There is a significant risk that, despite statutory requirements and EPA and State efforts towards attainment and maintenance, some areas of the U.S. will violate the PM_{10} NAAQS in 2007 and thereafter. Heavy-duty vehicles contribute substantially to PM_{10} levels, as shown in Section II.C below.

It is also reasonable to anticipate that concentrations of fine PM, as represented for example by $PM_{2.5}$ concentrations, will also endanger public health and welfare even if all areas attain and maintain the PM_{10} NAAQS. Heavy-duty vehicles contribute to this air pollution problem.

There are also important environmental impacts of PM_{10}, such as regional haze which impairs visibility. Furthermore, while the evidence on soiling and materials damage is limited and the magnitude of the impact of heavy-duty vehicles on these welfare effects is difficult to quantify, these welfare effects support our belief that this action is necessary and appropriate.

Finally, in addition to its contribution to PM inventories, diesel exhaust PM is of special concern because it has been implicated in an increased risk of lung cancer and respiratory disease in human studies, and an increased risk of noncancer health effects as well. The information provided in this section shows that there will be air pollution that warrants regulatory action under section 202(a)(3) of the Act.

4. Diesel Exhaust

Diesel emissions are of concern to the agency beyond their contribution to ambient PM. As discussed in detail in the draft RIA, there have been health studies specific to diesel exhaust emissions which indicate potential hazards to human health that appear to be specific to this emissions source. For chronic exposure, these hazards included respiratory system toxicity and carcinogenicity. Acute exposure also causes transient effects (a wide range of physiological symptoms stemming from irritation and inflammation mostly in the respiratory system) in humans though they are highly variable depending on individual human susceptibility. The chemical

[29] REMSAD modeling for $PM_{2.5}$ annual average concentrations. Total 1996 population in all REMSAD grid cells is 263 million.

[30] Samet JM, Zeger SL, Dominici F, Curriero F, Coursac I, Dockery DW, Schwartz J, Zanobetti A. 2000. The National Morbidity, Mortality and Air Pollution Study: Part II: Morbidity, Mortality and Air Pollution in the United States. Research Report No. 94, Part II. Health Effects Institute, Cambridge MA, June 2000.

[31] Dockery, D.W., Pope, C.A., III, Xu, X., Spengler, J.D., Ware, J.H., Fay, M.E., Ferris, B.G., Speizer, F.E. (1993) An association between air pollution and mortality in six U.S. cities. N. Engl. J. Med. 329:1753–1759.

[32] Pope, C. A., III, Thun, M. J., Namboodiri, M. M., Dockery, D. W., Evans, J. S., Speizer, F. E., Heath, C. W., Jr. (1995) Particulate air pollution as a predictor of mortality in a prospective study of U.S. adults. Am. J. Respir. Crit. Care Med. 151: 669–674.

[33] Krewski D, Burnett RT, Goldbert MS, Hoover K, Siemiatycki J, Jarrett M, Abrahamowicz M, White WH. (2000) Reanalysis of the Harvard Six Cities Study and the American Cancer Society Study of Particulate Air Pollution and Mortality. Special Report to the Health Effects Institute, Cambridge MA, July 2000.

composition of diesel exhaust includes several hazardous air pollutants, or air toxics. In our Mobile Source Air Toxic Rulemaking under section 202(l) of the Act discussed above, EPA determined that diesel particulate matter and diesel exhaust organic gases be identified as a Mobile Source Air Toxic (MSAT). The purpose of the MSAT list is to provide a screening tool that identifies compounds emitted from motor vehicles or their fuels for which further evaluation of emissions controls is appropriate. As discussed in chapter 3 on engine technology, the particulate matter standard finalized today reflects the greatest degree of emissions reductions achievable under section 202(l) for on-highway heavy-duty vehicle PM emissions.

a. Potential Cancer Effects of Diesel Exhaust

The EPA has concluded that diesel exhaust is likely to be carcinogenic to humans by inhalation at occupational and environmental levels of exposure.[34] The draft Health Assessment Document for Diesel Exhaust (draft Assessment), was reviewed in public session by the Clean Air Scientific Advisory Committee (CASAC) on October 12–13, 2000.[35] The CASAC found that the Agency's conclusion that diesel exhaust is likely to be carcinogenic to humans is scientifically sound. CASAC concurred with the draft Assessment's findings with the proviso that EPA provide modifications and clarifications on certain topics. The Agency expects to produce the finalized Assessment in early 2001. Information presented here is consistent with that to be provided in the final Assessment.

In its review of the published literature, EPA found that about 30 individual epidemiologic studies show increased lung cancer risk associated with diesel emissions. In the draft Assessment EPA evaluated 22 studies that were most relevant for risk assessment, 16 of which reported significant increased lung cancer risks, ranging from 20 to 167 percent, associated with diesel exhaust exposure. Published analytical results of pooling many of the 30 studies showed that on average, the risks were increased by 33 to 47 percent. Questions remain about the influence of other factors (e.g., effect of smoking, other particulate sources), the quality of the individual epidemiologic studies, exposure levels, and consequently the precise magnitude of the increased risk of lung cancer. From a weight of evidence perspective, EPA concludes that the epidemiologic evidence, as well as supporting data from certain animal and mode of action studies, support the Agency's conclusion that exposure to diesel exhaust is likely to pose a human lung cancer hazard to occupationally exposed individuals as well as to the general public exposed to typically lower environmental levels of diesel exhaust.

Risk assessments in the peer-reviewed literature have attempted to assess the lifetime risk of lung cancer in workers occupationally exposed to diesel exhaust. These estimates suggest that lung cancer risk may range from 10^{-4} to 10^{-2}.[36 37 38] The Agency recognizes the significant uncertainties in these studies, and has not used these estimates to assess the possible cancer unit risk associated with ambient exposure to diesel exhaust.

While available evidence supports EPA's conclusion that diesel exhaust is likely to be a human lung carcinogen, and thus is likely to pose a cancer hazard to humans, EPA has concluded that the available data are not sufficient to develop a confident estimate of cancer unit risk. The absence of a cancer unit risk for diesel exhaust limits our ability to quantify, with confidence, the potential impact of the hazard (magnitude of risk) on exposed populations. In the draft Assessment, EPA acknowledged this limitation and provided a discussion of the possible environmental cancer risk consistent with the majority of the occupational epidemiological findings of increased lung cancer risk and the exposure differences between the occupational and environmental settings.[39] The Agency concluded in developing its perspective on risk that there is a reasonable potential that environmental lifetime cancer risks (''environmental risk range'') from diesel exhaust may exceed 10^{-5} and could be as high as 10^{-3}.[40]

The environmental risk estimates included in the Agency's risk perspective are meant only to gauge the possible magnitude of risk to provide a means to understand the potential significance of the lung cancer hazard. The estimates are not to be construed as cancer unit risk estimates and are not suitable for use in analyses which would estimate possible lung cancer cases in exposed populations.

EPA recognizes that, as in all such risk assessments, there are uncertainties in this assessment of the environmental risk range including limitations in exposure data, uncertainty with respect to the most accurate characterization of the risk increases observed in the epidemiological studies, chemical changes in diesel exhaust over time, and extrapolation of the risk from occupational to ambient environmental exposures. As with any such risk assessment for a carcinogen, despite EPA's thorough examination of the available epidemiologic evidence and exposure information, at this time EPA can not rule out the possibility that the lower end of the risk range includes zero.[41] However, it is the Agency's best scientific judgement that the assumptions and other elements of this analysis are reasonable and appropriate for identifying the risk potential based on the scientific information currently available.

The Agency believes that the risk estimation techniques that were used in the draft Assessment to gauge the potential for and possible magnitude of risk are reasonable and the CASAC

[34] U.S. EPA (2000) Health Assessment Document for Diesel Exhaust: SAB Review Draft. EPA/600/8–90/057E Office of Research and Development, Washington, D.C. The document is available electronically at www.epa.gov/ncea/dieslexh.htm.

[35] EPA (2000) Review of EPA's Health Assessment Document for Diesel Exhaust (EPA 600/8–90/057E). Review by the Clean Air Scientific Advisory Committee (CASAC) December 2000. EPA–SAB–CASAC–01–003.

[36] California Environmental Protection Agency, Office of Health Hazard Assessment (CAL–EPA, OEHHA) (1998) Proposed Identification of Diesel Exhaust as a Toxic Air Contaminant. Appendix III Part B Health Risk Assessment for Diesel Exhaust. April 22, 1998.

[37] Harris, J.E. (1983) Diesel emissions and Lung Cancer. Risk Anal. 3:83–100.

[38] Stayner, L.S., Dankovic, D., Smith, R., Steenland, K. (1998) Predicted Lung Cancer Risk Among Miners Exposed to Diesel Exhaust Particles. Am. J. of Indus. Medicine 34:207–219.

[39] See Chapter 8.4 and 9.5.2 of the U.S. EPA (2000) Health Assessment Document for Diesel Emissions: SAB Review Draft. EPA/600/8–90/057E Office of Research and Development, Washington, D.C. The document is available electronically at www.epa.gov/ncea/dieselexh.htm.

[40] As used in this rule, environmental risk is defined as the risk (i.e. a mathematical probability) that lung cancer would be observed in the population after a lifetime exposure to diesel exhaust. Exposure levels may be occupational lifetime or environmental lifetime exposures. An environmental risk in the magnitude of 10^{-5} translates as the probability of lung cancer being evidenced in one person in a population of one hundred thousand having a lifetime exposure.

[41] EPA's scientific judgment (which CASAC has supported) is that diesel exhaust is likely to be carcinogenic to humans. Notably, similar scientific judgements about the carcinogenicity of diesel exhaust have been recently made by the National Toxicology Program of the Department of Health and Human Services, NIOSH, WHO, and OEHA of the State of California. In the risk perspective discussed above, EPA recognizes the possibility that the lower end of the environmental risk range includes zero. The risks could be zero because (1) some individuals within the population may have a high tolerance level to exposure from diesel exhaust and therefore are not susceptible to the cancer risks from environmental exposure and (2) although EPA has not seen evidence of this, there could be a threshold of exposure below which there is no cancer risk.

panel has concurred with the Assessment's discussion of the possible environmental risk range with an understanding that some clarifications and caveats would be added to the final version of the Assessment. Details of the technical approach used in estimating the possible range of environmental risks and uncertainties are provided in the RIA.

In the draft Assessment, the Agency also provided a discussion of the potential overlap and/or relatively small difference between some occupational settings where increased lung cancer risk is reported and ambient environmental exposures. The potential for small exposure differences underscores the concern that some degree of occupational risk may also be present in the environmental setting and that extrapolation of occupational risk to ambient environmental exposure levels should be more confidently judged to be appropriate. The relevant exposure information is presented in the RIA.

In the absence of having a unit cancer risk to assess environmental risk, EPA has considered the relevant epidemiological studies and principles for their assessment, the relative risk from occupational exposure as assessed by others, and relative exposure differences between occupational and ambient environmental levels of diesel exhaust exposure.

While uncertainty exists in estimating the possible magnitude of the environmental risk range, the likely hazard to humans together with the potential for significant environmental risks leads the Agency to believe that diesel exhaust emissions should be reduced in order to protect the public's health. We believe that this is a prudent measure in light of:

- The designation that diesel exhaust is likely to be carcinogenic to humans,
- The exposure of the entire population to various levels of diesel exhaust,
- The consistent observation of significantly increased lung cancer risk in workers exposed to diesel exhaust, and
- The potential overlap and/or relatively small difference between some occupational settings where increased lung cancer risk is reported and ambient exposures.

In the late 1980s, the International Agency for Research on Cancer (IARC) determined that diesel exhaust is ''probably carcinogenic to humans'' and the National Institute for Occupational Safety and Health classified diesel exhaust a ''potential occupational carcinogen.''[42] [43] Based on IARC findings, the State of California identified diesel exhaust in 1990 as a chemical known to the State to cause cancer. In 1996, the International Programme on Chemical Safety of the World Health Organization listed diesel exhaust as a ''probable'' human carcinogen.[44] In 1998, the California Office of Environmental Health Hazard Assessment (OEHHA, California EPA) identified diesel PM as a toxic air contaminant due to the noncancer and cancer hazard and because of the potential magnitude of the cancer risk.[45] Most recently, the U.S. Department of Health and Human Services National Toxicology Program designated diesel exhaust particles as ''reasonably anticipated to be a human carcinogen'' in its Ninth Report on Carcinogens.[46] The concern for a carcinogenicity hazard resulting from diesel exhaust exposures is longstanding and widespread.

b. Noncancer Effects of Diesel Exhaust

The acute and chronic exposure-related noncancer effects of diesel exhaust emissions are also of concern to the Agency. Acute exposure to diesel exhaust can result in physiologic symptoms consistent with irritation and inflammation, and evidence of immunological effects including increased reaction to allergens and some symptoms associated with asthma. The acute effects data, however, lack sufficient detail to permit the calculation of protective levels for human exposure.

For chronic diesel exhaust exposure, EPA is completing the development of an inhalation reference concentration (RfC). The RfC is an estimate of the continuous human inhalation exposure (including sensitive subgroups) that is likely to be without an appreciable risk of deleterious noncancer effects during a lifetime. While the limited amount of human data are suggestive of respiratory distress, animal test data are quite definitive in providing a basis to anticipate a hazard to the human lung based on the irritant and inflammatory reactions in test animals. Thus, EPA believes that chronic diesel exhaust exposure, at sufficient exposure levels, increases the hazard and risk of an adverse health effect. Based on CASAC advice regarding the use of the animal data to derive the RfC, the Agency will provide in the final Assessment in 2001 an RfC based on diesel exhaust effects in test animals of approximately 5 $\mu g/m^3$.

In addition, it is also instructive to recognize that diesel exhaust particulate matter is part of ambient fine PM. A qualitative comparison of adverse effects of exposure to ambient fine PM and diesel exhaust particulate matter shows that the respiratory system is adversely affected in both cases, though a wider spectrum of adverse effects has been identified for ambient fine PM. Relative to the diesel PM database, there is a wealth of human data for fine PM noncancer effects. Since diesel exhaust PM is a component of ambient fine PM, the fine PM health effects data base can be informative. The final Assessment will discuss the fine PM health effects data and its relation to evaluating health effects associated with diesel exhaust.

5. Other Criteria Pollutants

The standards being finalized today will help reduce levels of three other pollutants for which NAAQS have been established: carbon monoxide (CO), nitrogen dioxide (NO_2), and sulfur dioxide (SO_2). As of July, 2000, every area in the United States has been designated to be in attainment with the NO_2 NAAQS. There were 28 areas designated as nonattainment with the SO_2 standard, and 17 areas designated CO nonattainment areas.

A health threat of carbon monoxide at outdoor levels occurs for those who suffer from cardiovascular disease, such as angina petoris, where it can exacerbate the effects. Studies also show that outdoor levels can lower peak performance from individuals that are exercising and lower exercise tolerance of sensitive individuals. EPA believes that epidemiological evidence suggests that there is a risk of premature mortality and lowered birth weight from CO exposure.[47] The Carbon Monoxide Criteria Document was finalized in

[42] National Institute for Occupational Safety and Health (NIOSH) (1988) Carcinogenic effects of exposure to diesel exhaust. NIOSH Current Intelligence Bulletin 50. DHHS, Publication No. 88–116. Centers for Disease Control, Atlanta, GA.

[43] International Agency for Research on Cancer (1989) Diesel and gasoline engine exhausts and some nitroarenes, Vol. 46. Monographs on the evaluation of carcinogenic risks to humans. World Heath Organization, International Agency for Research on Cancer, Lyon, France.

[44] World Health Organization (1996) Diesel fuel and exhaust emissions: International program on chemical safety. World Health Organization, Geneva, Switzerland.

[45] Office of Environmental Health Hazard Assessment (1998) Health risk assessment for diesel exhaust, April 1998. California Environmental Protection Agency, Sacramento, CA.

[46] U.S. Department of Health and Human Services (2000) Ninth report on carcinogens. National Toxicology Program, Research Triangle Park, NC. ehis.niehs.nih.gov/roc/toc9.html.

[47] U.S. Environmental Protection Agency, Air Quality Criteria for Carbon Monoxide, June 2000.

August 2000 and made available to the public at that time.

6. Other Air Toxics

In addition to NO_X and particulates, heavy-duty vehicle emissions contain several other substances that are known or suspected human or animal carcinogens, or have serious noncancer health effects. These include benzene,1,3-butadiene, formaldehyde, acetaldehyde, acrolein, and dioxin. For some of these pollutants, heavy-duty engine emissions are believed to account for a significant proportion of total nation-wide emissions. Although these emissions will decrease in the short term, they are expected to increase between 2010 and 2020 without the emission limits, as the number of miles traveled by heavy-duty trucks increases. In the RIA, we present current and projected exposures to benzene, 1,3-butadiene, formaldehyde, and acetaldehyde from all on-highway motor vehicles.

By reducing hydrocarbon and other organic emissions, both in gas phase and bound to particles, the emission control program in today's action will also reduce the direct emissions of air toxics from HDVs. Today's action will reduce exposure to hydrocarbon and other organic emissions and therefore help reduce the impact of HDV emissions on cancer and noncancer health effects.

a. Benzene

Highway mobile sources account for 42 percent of nationwide emissions of benzene and HDVs account for 7 percent of all highway vehicle benzene emissions.[48] The EPA has recently reconfirmed that benzene is a known human carcinogen by all routes of exposure (including leukemia at high, prolonged air exposures), and is associated with additional health effects including genetic changes in humans and animals and increased proliferation of bone marrow cells in mice.[49] [50] [51] EPA believes that the data indicate a causal relationship between benzene exposure and acute lymphocytic leukemia and suggest a relationship between benzene exposure and chronic non-lymphocytic leukemia and chronic lymphocytic leukemia. Respiration is the major source of human exposure and at least half of this exposure is attributable to gasoline vapors and automotive emissions. A number of adverse noncancer health effects including blood, disorders, such as preleukemia and aplastic anemia, have also been associated with low-dose, long-term exposure to benzene.

b. 1,3-Butadiene

Highway mobile sources account for 42 percent of the annual emissions of 1,3-butadiene and HDVs account for 15 percent of the highway vehicle portion. Today's program will play an important role in reducing in the mobile contribution of 1,3-butadiene. Reproductive and/or developmental effects have been observed in mice and rats following inhalation exposure to 1,3-butadiene.[52] No information is available on developmental/reproductive effects in humans following exposure to 1,3-butadiene. In the EPA1998 draft Health Risk Assessment of 1,3-Butadiene, that was reviewed by the SAB, EPA proposed that 1,3-butadiene is a known human carcinogen based on human epidemiologic, laboratory animal data, and supporting data such as the genotoxicity of 1,3-butadiene metabolites.[53] The Environmental Health Committee of EPA's Scientific Advisory Board (SAB), reviewed the draft document in August 1998 and recommended that 1,3-butadiene be classified as a probable human carcinogen, stating that designation of 1,3-butadiene as a known human carcinogen should be based on observational studies in humans, without regard to mechanistic or other information.[54] In applying the 1996 proposed Guidelines for Carcinogen Risk Assessment, the Agency relies on both observational studies in humans as well as experimental evidence demonstrating causality and therefore the designation of 1,3-butadiene as a known human carcinogen remains applicable.[55] The Agency has revised the draft Health Risk Assessment of 1,3-Butadiene based on the SAB and public comments. The draft Health Risk Assessment of 1,3-Butadiene will undergo the Agency consensus review, during which time additional changes may be made prior to its public release and placement on the Integrated Risk Information System (IRIS).

c. Formaldehyde

Highway mobile sources contribute 24 percent of the national emissions of formaldehyde, and HDVs account for 36 percent of the highway portion. EPA has classified formaldehyde as a probable human carcinogen based on evidence in humans and in rats, mice, hamsters, and monkeys.[56] Epidemiological studies in occupationally exposed workers suggest that long-term inhalation of formaldehyde may be associated with tumors of the nasopharyngeal cavity (generally the area at the back of the mouth near the nose), nasal cavity, and sinus. Formaldehyde exposure also causes a range of noncancer health effects, including irritation of the eyes (tearing of the eyes and increased blinking) and mucous membranes. Sensitive individuals may experience these adverse effects at lower concentrations than the general population and in persons with bronchial asthma, the upper respiratory irritation caused by formaldehyde can precipitate an acute asthmatic attack. The agency is currently conducting a reassessment of risk from inhalation exposure to formaldehyde.

d. Acetaldehyde

Highway mobile sources contribute 29 percent of the national acetaldehyde emissions and HDVs are responsible for approximately 33 percent of these highway mobile source emissions. Acetaldehyde is classified as a probable human carcinogen and is considered moderately toxic by the inhalation, oral, and intravenous routes. The primary acute effect of exposure to acetaldehyde vapors is irritation of the eyes, skin, and respiratory tract. At high concentrations, irritation and pulmonary effects can occur, which could facilitate the uptake of other contaminants. The agency is currently conducting a reassessment of

[48] U.S. EPA (2000) 1996 National Toxics Inventory. http://www.epa.gov/ttn/uatw/nata. Inventory values for 1,3 butadiene, formaldehyde, acetaldehyde, and acrolein discussed below also come from this source.

[49] International Agency for Research on Cancer, IARC monographs on the evaluation of carcinogenic risk of chemicals to humans, Volume 29, Some industrial chemicals and dyestuffs, International Agency for Research on Cancer, World Health Organization, Lyon, France, p. 345–389, 1982.

[50] Irons, R.D., W.S. Stillman, D.B. Colagiovanni, and V.A. Henry, Synergistic action of the benzene metabolite hydroquinone on myelopoietic stimulating activity of granulocyte/macrophage colony-stimulating factor in vitro, Proc. Natl. Acad. Sci. 89:3691–3695, 1992.

[51] Environmental Protection Agency, Carcinogenic Effects of Benzene: An Update, National Center for Environmental Assessment, Washington, DC. 1998.

[52] Environmental Protection Agency. Draft Health Risk Assessment of 1,3-Butadiene, National Center for Environmental Assessment, Office of Research and Development, U.S. EPA, EPA/600/P–98/001A, February 1998.

[53] An SAB Report: Review of the Health Risk Assessment of 1,3-Butadiene. EPA-SAB-EHC–98, August, 1998.

[54] Scientific Advisory Board. 1998. An SAB Report: Review of the Health Risk Assessment of 1,3-Butadiene. EPA-SAB-EHC–98, August, 1998.

[55] [55]: EPA 1996. Proposed guidelines for carcinogen risk assessment. **Federal Register** 61(79):17960–18011.

[56] Environmental Protection Agency, Assessment of Health Risks to Garment Workers and Certain Home Residents from Exposure to Formaldehyde, Office of Pesticides and Toxic Substances, April 1987.

risk from inhalation exposure to acetaldehyde.

e. Acrolein

Highway mobile sources contribute 16 percent of the national acrolein emissions and HDVs are responsible for approximately 39 percent of these highway mobile source emissions. Acrolein is extremely toxic to humans when inhaled, with acute exposure resulting in upper respiratory tract irritation and congestion. The Agency has developed a reference concentration for inhalation (RfC) of acrolein of 0.02 micrograms/m^3.[57] Although no information is available on its carcinogenic effects in humans, based on laboratory animal data, EPA considers acrolein a possible human carcinogen.

f. Dioxins

Recent studies have confirmed that dioxins are formed by and emitted from heavy-duty diesel trucks and are estimated to account for 1.2 percent of total dioxin emissions in 1995. In the environment, the pathway of immediate concern is the food pathway (*e.g.*, human ingestion of certain foods, *e.g.* meat and dairy products contaminated by dioxin) which may be affected by deposition of dioxin from the atmosphere. EPA classified dioxins as probable human carcinogens in 1985. Recently EPA has proposed, and the Scientific Advisory Board has concurred, to classify one dioxin compound, 2,3,7,8-tetrachlorodibenzo-p-dioxin as a human carcinogen and the complex mixtures of dioxin-like compounds as likely to be carcinogenic to humans using the draft 1996 carcinogen risk assessment guidelines.[58] Using the 1986 cancer risk assessment guidelines, the hazard characterization for 2,3,7,8-tetrachlorodibenzo-p-dioxin is ''known'' human carcinogen and the hazard characterization for complex mixtures of dioxin-like compounds is ''probable'' human carcinogens. Acute and chronic noncancer effects have also been reported for dioxin.

7. Other Welfare and Environmental Effects

Some commenters challenged the Agency's use of adverse welfare and environmental effects associated with emissions from heavy-duty vehicles as a partial basis for this rulemaking. Other commenters went to great lengths to support the Agency's inclusion of these welfare and environmental effects. Additional information has been added since the proposal in order to update and clarify the available information on welfare and environmental impacts of heavy-duty vehicle emissions. The following section presents information on four categories of public welfare and environmental impacts related to heavy-duty vehicle emissions: acid deposition, eutrophication of water bodies, POM deposition, and impairment of visibility.

a. Acid Deposition

Acid deposition, or acid rain as it is commonly known, occurs when SO_2 and NO_X react in the atmosphere with water, oxygen, and oxidants to form various acidic compounds that later fall to earth in the form of precipitation or dry deposition of acidic particles.[59] It contributes to damage of trees at high elevations and in extreme cases may cause lakes and streams to become so acidic that they cannot support aquatic life. In addition, acid deposition accelerates the decay of building materials and paints, including irreplaceable buildings, statues, and sculptures that are part of our nation's cultural heritage. To reduce damage to automotive paint caused by acid rain and acidic dry deposition, some manufacturers use acid-resistant paints, at an average cost of $5 per vehicle—a total of $61 million per year if applied to all new cars and trucks sold in the U.S.

Acid deposition primarily affects bodies of water that rest atop soil with a limited ability to neutralize acidic compounds. The National Surface Water Survey (NSWS) investigated the effects of acidic deposition in over 1,000 lakes larger than 10 acres and in thousands of miles of streams. It found that acid deposition was the primary cause of acidity in 75 percent of the acidic lakes and about 50 percent of the acidic streams, and that the areas most sensitive to acid rain were the Adirondacks, the mid-Appalachian highlands, the upper Midwest and the high elevation West. The NSWS found that approximately 580 streams in the Mid-Atlantic Coastal Plain are acidic primarily due to acidic deposition. Hundreds of the lakes in the Adirondacks surveyed in the NSWS have acidity levels incompatible with the survival of sensitive fish species. Many of the over 1,350 acidic streams in the Mid-Atlantic Highlands (mid-Appalachia) region have already experienced trout losses due to increased stream acidity. Emissions from U.S. sources contribute to acidic deposition in eastern Canada, where the Canadian government has estimated that 14,000 lakes are acidic. Acid deposition also has been implicated in contributing to degradation of high-elevation spruce forests that populate the ridges of the Appalachian Mountains from Maine to Georgia. This area includes national parks such as the Shenandoah and Great Smoky Mountain National Parks.

A recent study of emissions trends and acidity of waterbodies in the Eastern United States by the General Accounting Office (GAO) found that sulfates declined in 92 percent of a representative sample of lakes from 1992 to 1999, and nitrate levels increased in 48 percent of the lakes sampled.[60] The decrease in sulfates is consistent with emissions trends, but the increase in nitrates is inconsistent with the stable levels of nitrogen emissions and deposition. The study suggests that the vegetation and land surrounding these lakes have lost some of their previous capacity to use nitrogen, thus allowing more of the nitrogen to flow into the lakes and increase their acidity. Recovery of acidified lakes is expected to take a number of years, even where soil and vegetation have not been ''nitrogen saturated,'' as EPA called the phenomenon in a 1995 study.[61] This situation places a premium on reductions of SO_X and especially NO_X from all sources, including HDVs, in order to reduce the extent and severity of nitrogen saturation and acidification of lakes in the Adirondacks and throughout the United States.

The SO_X and NO_X reductions from today's action will help reduce acid rain and acid deposition, thereby helping to reduce acidity levels in lakes and streams throughout the country and help accelerate the recovery of acidified lakes and streams and the revival of ecosystems adversely affected by acid deposition. Reduced acid deposition levels will also help reduce stress on forests, thereby accelerating reforestation efforts and improving timber production. Deterioration of our

[57] U.S. EPA (1993) Environmental Protection Agency, Integrated Risk Information System (IRIS), National Center for Environmental Assessment, Cincinnati, OH.

[58] U.S. EPA (2000) Exposure and Human Health Reassessment of 2,3,7,8-Tetrachlorodibenzo-p-Dioxin (TCDD) and Related Compounds. Part III: Integrated Summary and Risk Characterization for 2,3,7,8-Tetrachlorodibenzo-p-Dioxin (TCDD) and Related Compounds. External Review Draft. EPA/600/P–00/001Ag.

[59] Much of the information in this subsection was excerpted from the EPA document, Human Health Benefits from Sulfate Reduction, written under Title IV of the 1990 Clean Air Act Amendments, U.S. EPA, Office of Air and Radiation, Acid Rain Division, Washington, DC 20460, November 1995.

[60] Acid Rain: Emissions Trends and Effects in the Eastern United States, US General Accounting Office, March, 2000 (GOA/RCED–00–47).

[61] Acid Deposition Standard Feasibility Study: Report to Congress, EPA 430R–95–001a, October, 1995.

historic buildings and monuments, and of buildings, vehicles, and other structures exposed to acid rain and dry acid deposition also will be reduced, and the costs borne to prevent acid-related damage may also decline. While the reduction in sulfur and nitrogen acid deposition will be roughly proportional to the reduction in SO_X and NO_X emissions, respectively, the precise impact of today's action will differ across different areas.

b. Eutrophication and Nitrification

Eutrophication is the accelerated production of organic matter, particularly algae, in a water body. This increased growth can cause numerous adverse ecological effects and economic impacts, including nuisance algal blooms, dieback of underwater plants due to reduced light penetration, and toxic plankton blooms. Algal and plankton blooms can also reduce the level of dissolved oxygen, which can also adversely affect fish and shellfish populations.

In 1999, NOAA published the results of a five year national assessment of the severity and extent of estuarine eutrophication. An estuary is defined as the inland arm of the sea that meets the mouth of a river. The 138 estuaries characterized in the study represent more than 90 percent of total estuarine water surface area and the total number of US estuaries. The study found that estuaries with moderate to high eutrophication conditions represented 65 percent of the estuarine surface area. Eutrophication is of particular concern in coastal areas with poor or stratified circulation patterns, such as the Chesapeake Bay, Long Island Sound, or the Gulf of Mexico. In such areas, the ''overproduced'' algae tends to sink to the bottom and decay, using all or most of the available oxygen and thereby reducing or eliminating populations of bottom-feeder fish and shellfish, distorting the normal population balance between different aquatic organisms, and in extreme cases causing dramatic fish kills.

Severe and persistent eutrophication often directly impacts human activities. For example, losses in the nation's fishery resources may be directly caused by fish kills associated with low dissolved oxygen and toxic blooms. Declines in tourism occur when low dissolved oxygen causes noxious smalls and floating mats of algal blooms create unfavorable aesthetic conditions. Risks to human health increase when the toxins from algal blooms accumulate in edible fish and shellfish, and when toxins become airborne, causing respiratory problems due to inhalation. According to the NOAA report, more than half of the nation's estuaries have moderate to high expressions of at least one of these symptoms—an indication that eutrophication is well developed in more than half of U.S. estuaries.

In recent decades, human activities have greatly accelerated nutrient inputs, such as nitrogen and phosphorous, causing excessive growth of algae and leading to degraded water quality and associated impairments of freshwater and estuarine resources for human uses.[62] Since 1970, eutrophic conditions worsened in 48 estuaries and improved in 14. In 26 systems, there was no trend in overall eutrophication conditions since 1970.[63] On the New England coast, for example, the number of red and brown tides and shellfish problems from nuisance and toxic plankton blooms have increased over the past two decades, a development thought to be linked to increased nitrogen loadings in coastal waters. Long-term monitoring in the United States, Europe, and other developed regions of the world shows a substantial rise of nitrogen levels in surface waters, which are highly correlated with human-generated inputs of nitrogen to their watersheds.

On a national basis, the most frequently recommended control strategies by experts surveyed by National Oceanic and Atmospheric Administration (NOAA) between 1992–1997 were agriculture, wastewater treatment, urban runoff, and atmospheric deposition.[64] In its Third Report to Congress on the Great Waters, EPA reported that atmospheric deposition contributes from 2 to 38 percent of the nitrogen load to certain coastal waters.[65] A review of peer reviewed literature in 1995 on the subject of air deposition suggests a typical contribution of 20 percent or higher.[66] Human-caused nitrogen loading to the Long Island Sound from the atmosphere was estimated at 14 percent by a collaboration of federal and state air and water agencies in 1997.[67] The National Exposure Research Laboratory, US EPA, estimated based on prior studies that 20 to 35 percent of the nitrogen loading to the Chesapeake Bay is attributable to atmospheric deposition.[68] The mobile source portion of atmospheric NO_X contribution to the Chesapeake Bay was modeled at about 30 percent of total air deposition.[69]

Deposition of nitrogen from heavy-duty vehicles contributes to elevated nitrogen levels in waterbodies. In the Chesapeake Bay region, modeling shows that mobile source deposition occurs in relatively close proximity to highways, such as the 1–95 corridor which covers part of the Bay surface. The new standards for heavy-duty vehicles will reduce total NO_X emissions by 2.6 million tons in 2030. The NO_X reductions will reduce the airborne nitrogen deposition that contributes to eutrophication of watersheds, particularly in aquatic systems where atmospheric deposition of nitrogen represents a significant portion of total nitrogen loadings.

c. Polycyclic Organic Matter Deposition

EPA's Great Waters Program has identified 15 pollutants whose deposition to water bodies has contributed to the overall contamination loadings to the these Great Waters.[70] One of these 15 pollutants, a group known as polycyclic organic matter (POM), are compounds that are mainly adhered to the particles emitted by mobile sources and later fall to earth in the form of precipitation or dry deposition of particles. The mobile source contribution of the 7 most toxic POM is at least 62 tons/year and represents only those POM that adhere to mobile source particulate emissions.[71] The majority of these emissions are produced by diesel engines.

[62] Deposition of Air Pollutants to the Great Waters, Third Report to Congress, June, 2000.

[63] Deposition of Air Pollutants to the Great Waters, Third Report to Congress, June, 2000. Great Waters are defined as the Great Lakes, the Chesapeake Bay, Lake Champlain, and coastal waters. The first report to Congress was delivered in May, 1994; the second report to Congress in June, 1997.

[64] Bricker, Suzanne B., et al., National Estuarine Eutrophication Assessment, Effects of Nutrient Enrichment in the Nation's Estuaries, National Ocean Service, National Oceanic and Atmospheric Administration, September, 1999.

[65] Deposition of Air Pollutants to the Great Waters, Third Report to Congress, June, 2000.

[66] Valigura, Richard, et al., Airsheds and Watersheds II: A Shared Resources Workshop, Air Subcommittee of the Chesapeake Bay Program, March, 1997.

[67] The Impact of Atmospheric Nitrogen Deposition on Long Island Sound, The Long Island Sound Study, September, 1997.

[68] Dennis, Robin L., Using the Regional Acid Deposition Model to Determine the Nitrogen Deposition Airshed of the Chesapeake Bay Watershed, SETAC Technical Publications Series, 1997.

[69] Dennis, Robin L., Using the Regional Acid Deposition Model to Determine the Nitrogen Deposition Airshed of the Chesapeake Bay Watershed, SETAC Technical Publications Series, 1997.

[70] Deposition of Air Pollutants to the Great Waters—Third Report to Congress, June, 2000, Office of Air Quality Planning and Standards Deposition of Air Pollutants to the Great Waters—Second Report to Congress, Office of Air Quality Planning and Standards, June 1997, EPA–453/R–97–011.

[71] The 1996 National Toxics Inventory, Office of Air Quality Planning and Standards, October 1999.

POM is generally defined as a large class of chemicals consisting of organic compounds having multiple benzene rings and a boiling point greater than 100 degrees C. Polycyclic aromatic hydrocarbons are a chemical class that is a subset of POM. POM are naturally occurring substances that are byproducts of the incomplete combustion of fossil fuels and plant and animal biomass (e.g., forest fires). Also, they occur as byproducts from steel and coke productions and waste incineration. Evidence for potential human health effects associated with POM comes from studies in animals (fish, amphibians, rats) and in human cells culture assays. Reproductive, developmental, immunological, and endocrine (hormone) effects have been documented in these systems. Many of the compounds included in the class of compounds known as POM are classified by EPA as probable human carcinogens based on animal data.

Evidence for potential human health effects associated with POM comes from studies in animals (fish, amphibians, rats) and in human cells culture assays. Reproductive, developmental, immunological, and endocrine (hormone) effects have been documented in these systems. Many of the compounds included in the class of compounds known as POM are classified by EPA as probable human carcinogens based on animal data.

The particulate reductions from today's action will help reduce not only the particulate emissions from highway diesel engines but also the deposition of the POM adhering to the particles, thereby helping to reduce health effects of POM in lakes and streams, accelerate the recovery of affected lakes and streams, and revive the ecosystems adversely affected.

d. Visibility and Regional Haze

Visibility impairment, also called regional haze, is a complex problem caused by a variety of sources, both natural and anthropogenic (e.g., motor vehicles). Regional haze masks objects on the horizon and reduces the contrast of nearby objects. The formation, extent, and intensity of regional haze are functions of meteorological and chemical processes, which sometimes cause fine particle loadings to remain suspended in the atmosphere for several days and to be transported hundreds of kilometers from their sources (NRC, 1993).

Visibility has been defined as the degree to which the atmosphere is transparent to visible light (NRC, 1993). Visibility impairment is caused by the scattering and absorption of light by particles and gases in the atmosphere. Fine particles (0.1 to 2.5 microns in diameter) are more effective per unit mass concentration at impairing visibility than either larger or smaller particles (NAPAP, 1991). Most of the diesel particle mass emitted by diesel engines falls within this fine particle size range. Light absorption is often caused by elemental carbon, a product of incomplete combustion from activities such as burning diesel fuel or wood. These particles cause light to be scattered or absorbed, thereby reducing visibility.

Heavy-duty vehicles contribute a significant portion of the emissions of direct PM, NO_X, and SO_X that result in ambient PM that contributes to regional haze and impaired visibility. The Grand Canyon Visibility Transport Commission's report found that heavy-duty diesel vehicles contribute 41 percent of fine elemental carbon or soot, 20 percent of NO_X, 7 percent of fine organic carbon, and 6 percent of SO_X. The report also found that reducing total mobile source emissions is an essential part of any program to protect visibility in the Western U.S. The Commission identified mobile source pollutants of concern as VOC, NO_X, and elemental and organic carbon. The Western Governors Association, in later commenting on the Regional Haze Rule and on protecting the 16 Class I areas on the Colorado Plateau, stated that the federal government, and particularly EPA, must do its part in regulating emissions from mobile sources that contribute to regional haze in these areas. As described more fully later in this section, today's action will result in large reductions in these pollutants. These reductions are expected to provide an important step towards improving visibility across the nation. Emissions reductions being achieved to attain the 1-hour ozone and PM_{10} NAAQS will assist in visibility improvements. Moreover, the timing of the reductions from the standards fits very well with the goals of the regional haze program. We will work with the regional planning bodies to make sure they have the information to take account of the reductions from this final rule in their planning efforts.

The Clean Air Act contains provisions designed to protect national parks and wilderness areas from visibility impairment. In 1999, EPA promulgated a rule that will require States to develop plans to dramatically improve visibility in national parks. Although it is difficult to determine natural visibility levels, we believe that average visual range in many Class I areas in the United States is significantly less (about 50–66 percent of natural visual range in the West, about 20 percent of natural visual range in the East) than the visual range that will exist without anthropogenic air pollution. The final Regional Haze Rule establishes a 60-year time period for planning purposes, with several near term regulatory requirements, and is applicable to all 50 states. One of the obligations is for States to representative conduct visibility monitoring in mandatory Class I Federal areas and determine baseline conditions using data for year 2000 to 2004. Reductions of particles, NO_X, sulfur, and VOCs from this rulemaking will have a significant impact on moving all states towards achieving long-term visibility goals, as outlined in the 1999 Regional Haze Rule.

C. Contribution from Heavy-Duty Vehicles

Nationwide, heavy-duty vehicles are projected to contribute about 15 percent of the total NO_X inventory, and 28 percent of the mobile source inventory in 2007. Heavy-duty NO_X emissions also contribute to fine particulate concentrations in ambient air due to the transformation in the atmosphere to nitrates. The NO_X reductions resulting from today's standards will therefore have a considerable impact on the national NO_X inventory. All highway vehicles account for 34 percent and heavy-duty highway vehicles account for 20 percent of the mobile source portion of national PM_{10} emissions in 2007. The heavy-duty portion of the inventory is often greater in the cities, and the reductions in this rulemaking will have a relatively greater benefit in those areas.

1. NO_X Emissions

Heavy-duty vehicles are important contributors to the national inventories of NO_X emissions. Without NO_X reductions from this rule, HDVs are expected to contribute approximately 18 percent of annual NO_X emissions in 1996. The HDV contribution is predicted to fall to 15 percent in 2007 and 14 percent in 2020 due to reductions from the 2004 heavy-duty rulemaking, and then rise again to 16 percent of total NO_X inventory by 2030 (Table II.C–1). Annual NO_X reductions from this rule are expected to total 2.6 million tons in 2030.

TABLE II.C–1—NO_X EMISSIONS FROM HDVS WITH AND WITHOUT REDUCTIONS FROM THIS RULE

Year	Without this rule (base case)		With this rule (control case)
	HDV annual NO_X tons	HDV annual NO_X tons as a percent of total NO_X	Reductions in annual HDV NO_X tons
1996	4,810,000	18	n/a
2007	3,040,000	15	58,000
2020	2,560,000	14	1,820,000
2030	2,960,000	16	2,570,000

The contribution of heavy-duty vehicles to NO_X inventories in many MSAs is significantly greater than that reflected in the national average. For example, HDV contributions to total annual NO_X is greater than the national average in the eight metropolitan statistical areas listed in Table II.C–2. Examples of major cities with a history of persistent ozone violations that are heavily impacted by NO_X emissions from HDVs include: Los Angeles, Washington, DC, San Diego, Hartford, Atlanta, Sacramento. As presented in the table below, HDV's contribute from 22 percent to 33 percent of the total NO_X inventories in these selected cities. NO_X emissions also contribute to the formation of fine particulate matter, especially in the West. In all areas, NO_X also contributes to environmental and welfare effects such as regional haze, and eutrophication and nitrification of water bodies.

TABLE II.C–2—HEAVY-DUTY VEHICLE PERCENT CONTRIBUTION TO NO_X INVENTORIES IN SELECTED URBAN AREAS IN 2007

MSA, CMSA / State	HDV NO_X as portion of total NO_X (%)	HDV NO_X as portion of mobile source NO_X (%)
National	*15*	*28*
Sacramento, CA	33	37
Hartford, CT	28	38
San Diego, CA	25	28
San Francisco, CA	24	29
Atlanta, GA	22	34
Los Angeles	22	26
Dallas	22	28
Washington-Baltimore, MSA	22	36

2. PM Emissions

Nationally, we estimate that primary emissions of PM_{10} to be about 33 million tons/year in 2007. Fugitive dust, other miscellaneous sources and crustal material (wind erosion) constitute approximately 90 percent of the 2007 PM_{10} inventory. However, there is evidence from ambient studies that emissions of these materials may be overestimated and/or that once emitted they have less of an influence on monitored PM concentration than this inventory share would suggest. Mobile sources account for 22 percent of the PM_{10} inventory (excluding the contribution of miscellaneous and natural sources) and highway heavy-duty engines, the subject of today's action, account for 20 percent of the mobile source portion of national PM_{10} emissions in 2007.

The contribution of heavy-duty vehicle emissions to total PM emissions in some metropolitan areas is substantially higher than the national average. This is not surprising, given the high density of these engines operating in these areas. For example, in Los Angeles, Atlanta, Hartford, San Diego, Santa Fe, Cincinnati, and Detroit, the estimated 2007 highway heavy-duty vehicle contribution to mobile source PM_{10} ranges from 25 to 38 percent, while the national percent contribution to mobile sources for 2007 is projected to be about 20 percent. As illustrated in Table II.C–3, heavy-duty vehicles operated in El Paso, Indianapolis, San Francisco, and Minneapolis also account for a higher portion of the mobile source PM inventory than the national average. These data are based on updated inventories developed for this rulemaking. Importantly, these estimates do not include the contribution from secondary PM, which is an important component of diesel PM.

TABLE II.C–3—2007 HEAVY-DUTY VEHICLE CONTRIBUTION TO URBAN MOBILE SOURCE PM INVENTORIES

MSA, State	HDV PM Contribution to mobile source PMG[a]
National (48 State)	*20*
Atlanta, GA MSA	25
Cincinnati-Hamilton, OH–KY–IN CMSA	26
Detroit-Ann Arbor-Flint, MI CMSA	25
El Paso, TX MSA	23
Hartford, CT MSA	30
Indianapolis, IN MSA	23
Los Angeles-Riverside-Orange County, CA CMSA	25
Minneapolis-St. Paul, MN–WI MSA	23
San Diego, CA MSA	27
San Francisco-Oakland-San Jose, CA CMSA	24
Santa Fe, NM MSA	38

[a] Direct exhaust emissions only; excludes secondary PM.

The city-specific emission inventory analysis and investigations of ambient $PM_{2.5}$ summarized in the RIA indicate that the contribution of diesel engines to PM inventories in several urban areas around the U.S. is much higher than indicated by the national PM emission inventories only. One possible explanation for this is the concentrated use of diesel engines in certain local or regional areas which is not well represented by the national, yearly average presented in national PM emission inventories. Another reason may be underestimation of the in-use diesel PM emission rates. Our current modeling incorporates deterioration only as would be experienced in properly maintained, untampered vehicles. We are currently in the process of reassessing the rate of in-use deterioration of diesel engines and vehicles which could significantly increase the contribution of HDVs to diesel PM.

3. Environmental Justice

Environmental justice is a priority for EPA. The Federal government stated its concern, in part, over this issue through issuing Executive Order 12898, Federal Actions To Address Environmental Justice in Minority Populations and Low-Income Populations (February 11, 1994). This Order requires that federal agencies make achieving environmental justice part of their mission. Similarly, the EPA created an Office of Environmental Justice (originally the Office of Environmental Equity) in 1992, commissioned a task force to address environmental justice issues, oversees a Federal Advisory Committee addressing environmental justice issues (the National Environmental Justice Advisory Council), and has developed an implementation strategy as required under Executive Order 12898.

Application of environmental justice principles as outlined in the Executive Order advances the fair treatment of people of all races, income, and culture with respect to the development, implementation, and enforcement of environmental laws, regulations, and policies. Fair treatment implies that no person or group of people should shoulder a disproportionate share of any negative environmental impacts resulting from the execution of this country's domestic and foreign policy programs.

For the last several years, environmental organizations and community-based citizens groups have been working together to phase out diesel buses in urban areas. For example, the Natural Resources Defense Council initiated a ''Dump Dirty Diesel'' campaign in the 1990s to press for the phase out of diesel buses in New York City. Other environmental organizations operating in major cities such as Boston, Newark, and Los Angeles have joined this campaign. The Coalition for Clean Air worked with NRDC and other experts to perform exposure monitoring in communities located near distribution centers where diesel truck traffic is heavy. These two organizations concluded that facilities with heavy truck traffic are exposing local communities to diesel exhaust concentrations far above the average levels in outdoor air. The report states: ''These affected communities, and the workers at these distribution facilities with heavy diesel truck traffic, are bearing a disproportionate burden of the health risks.'' [72] Other diesel ''hot spots'' identified by the groups are bus terminals, truck and bus maintenance facilities, retail distribution centers, and busy streets and highways.

While there is currently a limited understanding of the relationship of environmental exposures to the onset of asthma, the environmental triggers of asthma attacks for children with asthma have become increasingly well characterized.[73] Asthma's burden falls hardest on the poor, inner city residents, and children. Among children up to 4 years of age, asthma prevalence increased 160 percent since 1980.[74] African-American children have an annual rate of hospitalization three times that for white children, and are four times as likely to seek care at an emergency room.[75] In 1995, the death rate from asthma in African-American children, 11.5 per million, was over four times the rate in white American children, 2.6 per million.[76]

Local community groups and private citizens testified at public hearings held for this rule that the residents of their communities suffer greatly, and disproportionally, from air pollution in general, and emissions from heavy-duty vehicles in particular. For example, a testifier in New York pointed out that ''since Northern Manhattan and the South Bronx experience asthma mortality and morbidity rates at three to five times greater than the citywide average, New York City's problem is Northern Manhattan's crisis.'' [77]

The new standards established in this rulemaking are expected to improve air quality across the country and will provide increased protection to the public against a wide range of health effects, including chronic bronchitis, respiratory illnesses, and aggravation of asthma symptoms. These air quality and public health benefits could be expected to mitigate some of the environmental justice concerns related to heavy-duty vehicles since the rule will provide relatively larger benefits to heavily impacted urban areas.

D. Anticipated Emissions Benefits

This subsection presents the emission benefits we anticipate from heavy-duty vehicles as a result of our new NO_X, PM, and NMHC emission standards for heavy-duty engines. The graphs and tables that follow illustrate the Agency's projection of future emissions from heavy-duty vehicles for each pollutant. The baseline case represents future emissions from heavy-duty vehicles at present standards (including the MY2004 standards). The controlled case quantifies the future emissions of heavy-duty vehicles once the new standards in this FRM are implemented.

We use the same baseline inventory as is used in the county-by-county, hour-by-hour air quality analyses associated with this rule. However, we made a slight modification to the controlled inventory to incorporate the changes between the proposed and final standards. Because the detailed air quality analyses took several months to perform, we had to use the proposed standards for the air quality analysis. Since beginning this analysis, we updated the control case emission inventories to reflect the final phase-in of the NO_X standard, slight changes to the timing of the HDGV standards, a temporary compliance option for introducing the low sulfur fuel requirements, and various hardship provisions for refiners in our emission inventory projections. The emission inventory calculations are presented in detail in the Regulatory Impact Analysis.

1. NO_X Reductions

The Agency expects substantial NO_X reductions on both a percentage and a tonnage basis from the new standards. The RIA provides additional projections between 2007 and 2030. As stated previously, HDVs contribute about 15 percent to the national NO_X inventory for all sources in 2007. Figure II.D–1 shows our national projections of total NO_X emissions with and without the engine controls finalized today. Table II.D–1 presents the total reductions.[78] This includes both exhaust and crankcase emissions.[79] The standards

[72] *Exhausted by Diesel: How America's Dependence on Diesel Engines Threatens Our Health,* Natural Resources Defense Council, Coalition for Clean Air, May 1998.

[73] *Asthma and the Environment: A Strategy to Protect Children, President's Task Force on Environmental Health Risks and Safety Risks to Children,* January 28, 1999, Revised May, 2000.

[74] Asthma Statistics, National Institutes of Health, National Heart, Lung and Blood Institute, January, 1999.

[75] *Asthma and the Environment: A Strategy to Protect Children, President's Task Force on Environmental Health Risks and Safety Risks to Children,* January 28, 1999, Revised May, 2000. The Task Force was formed in conjunction with Executive Order 13045 (April 21, 1997), is co-chaired by Department of Health and Human Services and EPA, and is charged with recommending strategies for protecting children's environmental health and safety. In April, 1998, the Task Force identified childhood asthma as one of its top four priorities for immediate attention.

[76] *Id.*

[77] Testimony by Peggy Shepard, Executive Director, West Harlem Environmental Action, June 19th, 2000.

[78] The baseline used for this calculation is the 2004 HDV standards (64 FR 58472). These reductions are in addition to the NO_X emissions reductions projected to result from the 2004 HDV standards.

[79] We include in the NO_X projections excess emissions, developed by the EPA's Office of Enforcement and Compliance, that were emitted by many model year 1998–98 diesel engines. This is described in more detail in Chapter 2 of the RIA.

should result in close to a 90 percent reduction in NO_X from new engines.

BILLING CODE 6560–50–P

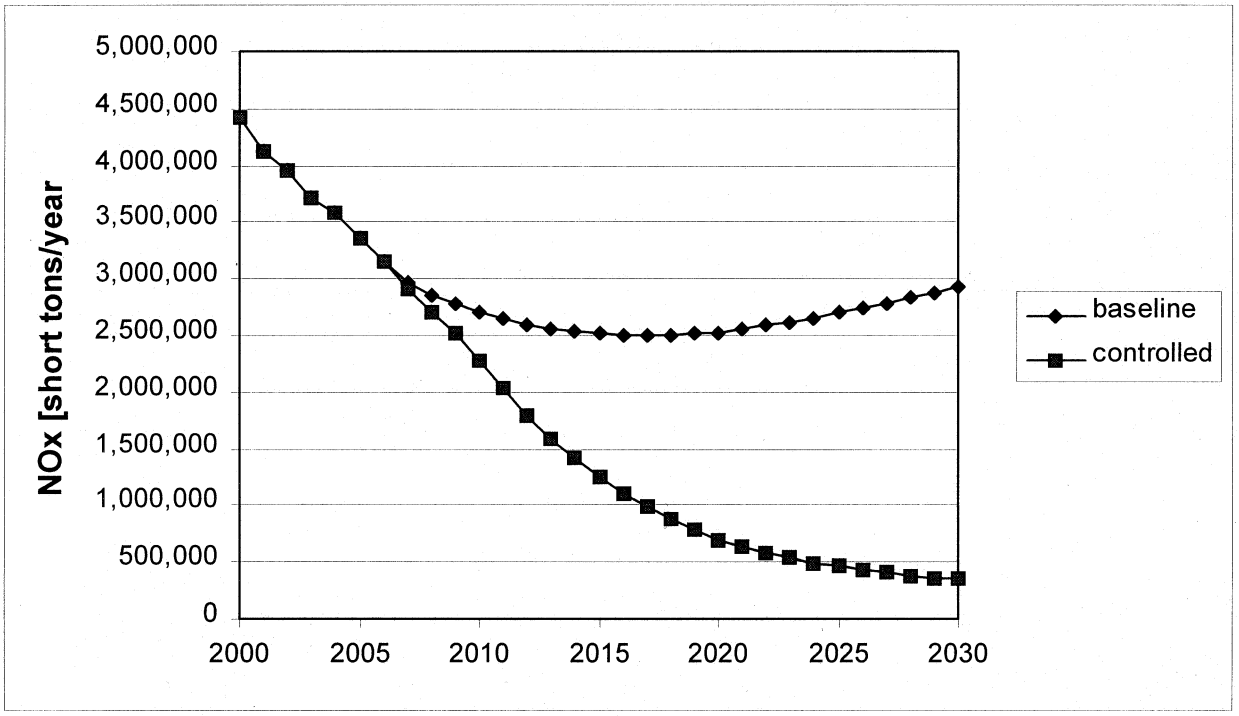

Figure II.D-1: Projected Nationwide Heavy-Duty Vehicle NOx Emissions

BILLING CODE 6560–50–C

TABLE II.D–1.—ESTIMATED REDUCTIONS IN NO_X

Calendar year	NO_X reduction [thousand short tons]
2007	58
2010	419
2015	1,260
2020	1,820
2030	2,570

2. PM Reductions

As stated previously, HDVs will contribute about 20 percent to the 2007 national PM_{10} inventory for mobile sources. The majority of the projected PM reductions are directly a result of the exhaust PM standard. However, a modest amount of PM reductions will come from reducing sulfur in the fuel. For the existing fleet of heavy-duty vehicles, a small fraction of the sulfur in diesel fuel is emitted directly into the atmosphere as direct sulfate, and a portion of the remaining fuel sulfur is transformed in the atmosphere into sulfate particles, referred to as indirect sulfate. Reducing sulfur in the fuel decreases the amount of direct sulfate PM emitted from heavy-duty diesel engines and the amount of heavy-duty diesel engine SOx emissions that are transformed into indirect sulfate PM in the atmosphere.[80] For engines meeting the new standards, we consider low sulfur fuel to be necessary to enable the PM control technology. In other words, we do not claim an additional benefit beyond the new exhaust standard for reductions in direct sulfate PM for new engines. However, once the low sulfur fuel requirements go into effect, many pre-2007 model year engines would also be using low sulfur fuel. Because these pre-2007 model year engines are certified with higher sulfur fuel, they will achieve reductions in PM beyond their certification levels.

Figure II.D–2 shows our national projections of total HDV PM (TPM) emissions with and without the new engine controls. This figure includes brake and tire wear, crankcase emissions and the direct sulfate PM (DSPM) benefits due to the use of low sulfur fuel by the existing fleet. These direct sulfate PM benefits from the existing fleet are also graphed separately. The new standards will result in about a 90 percent reduction in exhaust PM from new heavy-duty diesel engines. The low sulfur fuel should result in more than a 95 percent reduction in direct sulfate PM from pre-2007 heavy-duty diesel engines. Due to complexities of the conversion and removal processes of sulfur dioxide, we do not attempt to quantify the indirect sulfate reductions that would be derived from this rulemaking in the inventory analysis. Nevertheless, we recognize that these indirect sulfate PM reductions contribute significant additional benefits to public health and welfare, and we include this effect in our more detailed air quality analysis.

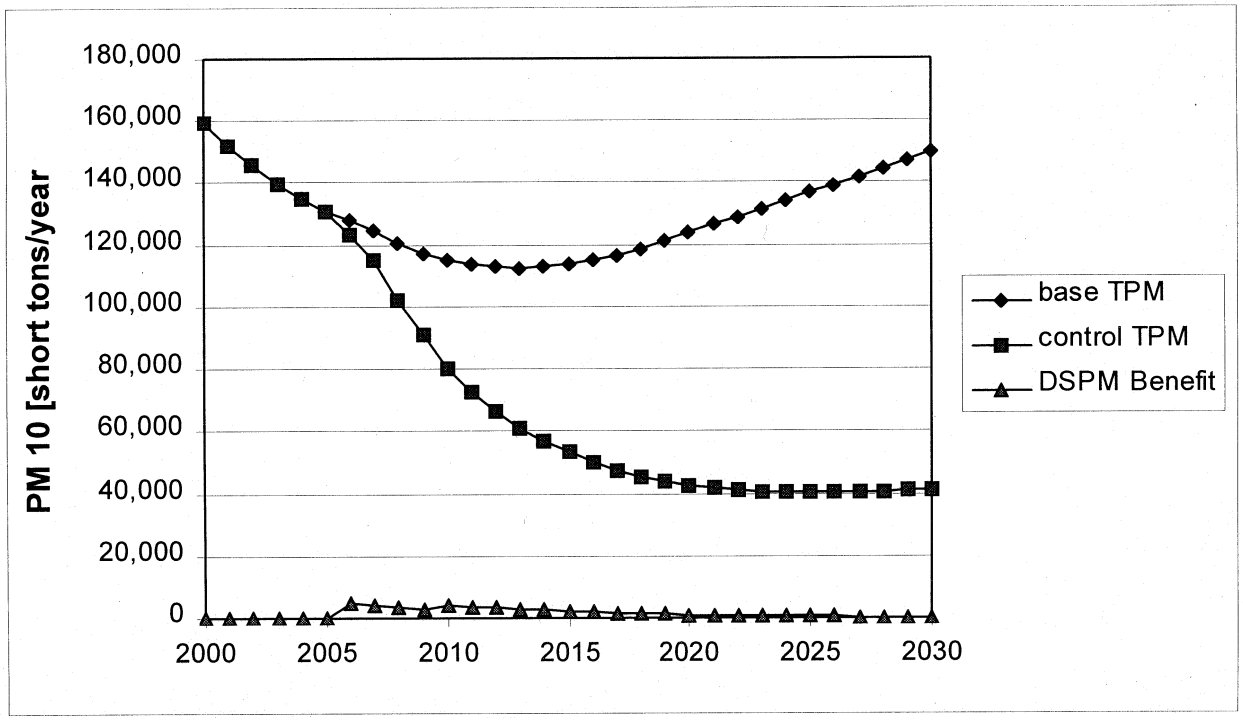

Figure II.D-2: Projected Nationwide Heavy-Duty Vehicle PM Emissions and Direct Sulfate Emission Reductions

[80] Sulfate forms a significant portion of total fine particulate matter in the Northeast Chemical speciation data in the Northeast collected in 1995 shows that the sulfate fraction of fine particulate matter ranges from 20 and 27 percent of the total fine particle mass. *Determination of Fine Particle and Concentrations and Chemical Composition in the Northeastern United States. 1995.* NESCAUM, prepared by Cass, et al., September 1999.

TABLE II.D–2.—ESTIMATED REDUCTIONS IN PM

Calendar year	PM reduction [thousand short tons]
2007	11
2010	36
2015	61
2020	82
2030	109

3. NMHC Reductions

The standards described in Section III are designed to be feasible for both gasoline and diesel heavy-duty vehicles. Although the standards give manufacturers the same phase-in for NMHC as for NO_X, we model the NMHC reductions for diesel vehicles to be fully in place in 2007 due to the application of particulate control technology. We believe the use of aftertreatment for PM control will cause the NMHC levels to be below the standards as soon as the PM standard goes into effect in 2007.

HDVs account for about 3 percent of national VOC and 8 percent from mobile sources in 2007. Figure II.D–3 shows our national projections of total NMHC emissions with and without the new engine controls. This includes both exhaust emissions and evaporative emissions. Table II.D–3 presents the projected reductions of NMHC due to the new standards.

BILLING CODE 6560–50–P

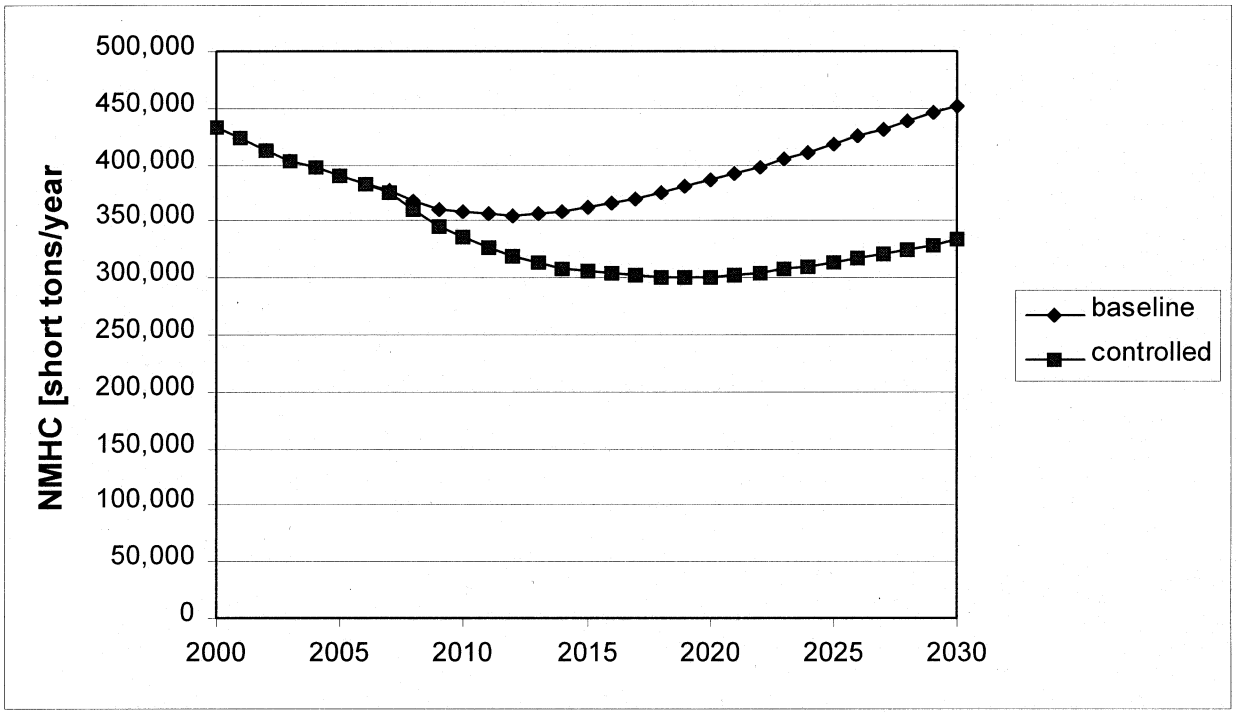

Figure II.D-3: Projected Nationwide Heavy-Duty Vehicle NMHC Emissions

BILLING CODE 6560–50–C

TABLE II.D–3.—ESTIMATED REDUCTIONS IN NMHC

Calendar year	NMHC reduction [thousand short tons]
2007	2
2010	21
2015	54
2020	83
2030	115

4. Additional Emissions Benefits

This subsection looks at tons/year emission inventories of CO, SO_X, and air toxics from HDEs. Although we are not including stringent standards for these pollutants in this action, we believe the standards will result in reductions in CO, SO_X, and air toxics. Here, we present our anticipated benefits.

a. CO Reductions

In 2007, HDVs are projected to contribute to approximately 5 percent of national CO and 9 percent of CO from mobile sources. Although it does not include new CO emission standards, today's action would nevertheless be expected to result in a considerable reduction in CO emissions from heavy-duty vehicles. CO emissions from heavy-duty diesel vehicles, although already very low, would likely be reduced by an additional 90 percent due to the operation of emissions control systems that will be necessary to achieve today's new standards for hydrocarbons and particulate matter. CO emissions from heavy-duty gasoline vehicles would also likely decline as the NMHC emissions are decreased. Table II.D–4 presents the projected reductions in CO emissions from HDVs.

TABLE II.D–4.—ESTIMATED REDUCTIONS IN CO

Calendar year	CO reduction [thousand short tons]
2007	56
2010	317
2015	691
2020	982
2030	1,290

b. SO_X Reductions

HDVs are projected to emit approximately 0.5 percent of national SO_X and 8 percent of mobile source SO_X in 2007. We are requiring significant reductions in diesel fuel sulfur to enable certain emission control devices to function properly. We expect SO_X emissions to decline as a direct benefit of low sulfur diesel fuel. The majority of these benefits will be from heavy-duty highway diesel vehicles; however, some benefits will also come from highway fuel burned in other applications such as light-duty diesel vehicles and nonroad engines. As discussed in greater detail in the section on PM reductions, the amount of sulfate particles (direct and indirect) formed as a result of diesel exhaust emissions will decline for all HD diesel engines operated on low sulfur diesel fuel, including the current on-highway HD diesel fleet, and those non-road HD diesel engines that may operate on low sulfur diesel fuel in the future. Table II.D–5 presents our estimates of SO_X reductions resulting from the low sulfur fuel.

TABLE II.D–5.—ESTIMATED REDUCTIONS IN SO_X DUE TO LOW SULFUR FUEL

Calendar year	SO_X reduction [thousand short tons]
2007	79
2010	107
2015	117
2020	126
2030	142

c. Air Toxics Reductions

This FRM establishes new non-methane hydrocarbon standards for all heavy-duty vehicles and a formaldehyde standard for complete heavy-duty vehicles. Hydrocarbons are a broad class of chemical compounds containing carbon and hydrogen. Many forms of hydrocarbons, such as formaldehyde, are directly hazardous and contribute to what are collectively called ''air toxics.'' Air toxics are pollutants known to cause or suspected of causing cancer or other serious human health effects or ecosystem damage. The Agency has identified at least 20 compounds emitted from on-road gasoline vehicles that have toxicological potential, 19 of which are emitted by diesel vehicles, as well as an additional 20 compounds which have been listed as toxic air contaminants by California ARB.[81] [82] This action also will reduce emissions of diesel exhaust and diesel particulate matter (see Section II.B for a discussion of health effects).

Our assessment of heavy-duty vehicle (gasoline and diesel) air toxics focuses on the following compounds with cancer potency estimates that have significant emissions from heavy-duty vehicles: benzene, formaldehyde, acetaldehyde, and 1,3-butadiene. These compounds are an important, but limited, subset of the total number of air toxics that exist in exhaust and evaporative emissions from heavy-duty vehicles. The reductions in air toxics quantified in this section represent only a fraction of the total number and amount of air toxics reductions expected from the new hydrocarbon standards.

For this analysis, we estimate that air toxic emissions are a constant fraction of hydrocarbon exhaust emissions from future engines. Because air toxics are a

[81] National Air Quality and Emissions Trends Report, 1997, (EPA 1998), p. 74.

[82] California Environmental Protection Agency (1998) Report to the Air Resources Board on the Proposed Identification of Diesel Exhaust as a Toxic Air Contaminant. Appendix III, Part A: Exposure Assessment. April 1998.

subset of hydrocarbons, and new emission controls are not expected to preferentially control one type of air toxic over another, the selected air toxics chosen for this analysis are expected to decline by the same percentage amount as hydrocarbon exhaust emissions. We have not performed a separate analysis for the new formaldehyde standard since compliance with the hydrocarbon standard should result in compliance with the formaldehyde standard for all petroleum-fueled engines. The RIA provides more detail on this analysis. Table II.D–6 shows the estimated air toxics reductions associated with the reductions in hydrocarbons.

TABLE II.D–6.—ESTIMATED REDUCTIONS IN AIR TOXICS (SHORT TONS)

Calendar year	Benzene	Formaldehyde	Acetaldehyde	1,3-Butadiene
2007	24	181	67	14
2010	356	1,670	608	135
2015	965	4,720	1,720	384
2020	1,340	7,080	2,600	567
2030	1,960	10,200	3,730	823

E. Clean Heavy-Duty Vehicles and Low-Sulfur Diesel Fuel are Critically Important for Improving Human Health and Welfare

Despite continuing progress in reducing emissions from heavy-duty engines, emissions from these engines continue to be a concern for human health and welfare. Ozone continues to be a significant public health problem, and affects not only people with impaired respiratory systems, such as asthmatics, but healthy children and adults as well. Ozone also causes damage to plants and has an adverse impact on agricultural yields. Particulate matter, like ozone, has been linked to a range of serious respiratory health problems, including premature mortality, aggravation of respiratory and cardiovascular disease, aggravated asthma, acute respiratory symptoms, and chronic bronchitis. Importantly, EPA has concluded that diesel exhaust is likely to be carcinogenic to humans by inhalation at occupational and environmental levels of exposure.

Today's action will reduce NO_X, VOC, CO, PM, and SO_X emissions from these heavy-duty vehicles substantially. These reductions will help reduce ozone levels nationwide and reduce the frequency and magnitude of predicted exceedances of the ozone standard. These reductions will also help reduce PM levels, both by reducing direct PM emissions and by reducing emissions that give rise to secondary PM. The NO_X and SO_X reductions will help reduce acidification problems, and the NO_X reductions will help reduce eutrophication problems. The PM and NO_X standard enacted today will help improve visibility. All of these reductions are expected to have a beneficial impact on human health and welfare by reducing exposure to ozone, PM, diesel exhaust and other air toxics and thus reducing the cancer and noncancer effects associated with exposure to these substances.

III. Heavy-Duty Engine and Vehicle Standards

In this section, we describe the vehicle and engine standards we are finalizing today to respond to the serious air quality needs discussed in Section II. Specifically, we discuss:

- The CAA and why we are finalizing new heavy-duty standards.
- The technology opportunity for heavy-duty vehicles and engines.
- Our new HDV and HDE standards, and our phase-in of those standards.
- Why we believe the stringent standards being finalized today are feasible in conjunction with the low sulfur gasoline required under the recent Tier 2 rule and the low sulfur diesel fuel being finalized today.
- The effects of diesel fuel sulfur on the ability to meet the new standards, and what happens if high sulfur diesel fuel is used.
- Plans for future review of the status of heavy-duty diesel NO_X emission control technology.

A. Why Are We Setting New Heavy-Duty Standards?

We are finalizing new heavy-duty vehicle and engine standards and related provisions under section 202(a)(3) of the CAA, which authorizes EPA to establish emission standards for new heavy-duty motor vehicles. (See 42 U.S.C. 7521(a)(3).) Section 202(a)(3)(A) requires that such standards ''reflect the greatest degree of emission reduction achievable through the application of technology which the Administrator determines will be available for the model year to which such standards apply, giving appropriate consideration to cost, energy, and safety factors associated with the application of such technology.'' Section 202(a)(3)(B) allows EPA to take into account air quality information in revising such standards. Because heavy-duty engines contribute greatly to a number of serious air pollution problems, especially the health and welfare effects of ozone, PM, and air toxics, and because millions of Americans live in areas that exceed the national air quality standards for ozone or PM, we believe the air quality need for tighter heavy-duty standards is well founded. This, and our belief that a significant degree of emission reduction from heavy-duty vehicles and engines is achievable, giving appropriate consideration to cost, energy, and safety factors, through the application of new diesel emission control technology, further refinement of well established gasoline emission controls, and reductions of diesel fuel sulfur levels, leads us to believe that new emission standards are warranted.

B. Emission Control Technologies for Heavy-Duty Vehicles and Engines

For the past 30 or more years, emission control development for gasoline vehicles and engines has concentrated most aggressively on exhaust emission control devices. These devices currently provide as much as or more than 95 percent of the emission control on a gasoline vehicle. In contrast, the emission control development work for diesels has concentrated on improvements to the engine itself to limit the emissions leaving the combustion chamber.

However, during the past 15 years, more development effort has been put into diesel exhaust emission control devices, particularly in the area of PM control. Those developments, and recent developments in diesel NO_X control devices, make the widespread commercial use of diesel exhaust emission controls feasible. Through use of these devices, we believe emissions control similar to that attained by gasoline applications will be possible with diesel applications. However, without low sulfur diesel fuel, these technologies cannot be implemented on heavy-duty diesel applications. Low sulfur diesel fuel will at the same time

also allow these technologies to be implemented on light-duty diesel applications.

As discussed at length in the preamble to our proposal, several exhaust emission control devices have been or are being developed to control harmful diesel exhaust pollutants. Of these, we believe that the catalyzed diesel particulate trap and the NO_X adsorber are the most likely candidates to be used to meet the very low diesel exhaust emission standards adopted today on the variety of applications in the heavy-duty diesel market. While other technologies exist that have the potential to provide significant emission reductions, such as selective catalytic reduction systems for NO_X control, and development of these technologies is being pursued to varying degrees, we believe that the catalyzed diesel particulate trap and the NO_X adsorber will be the only likely broadly applicable technology choice by the makers of engines and vehicles for the national fleet in this timeframe. However, as discussed in detail in the Final RIA, we strongly believe that none of these technologies can be brought to market on diesel engines and vehicles unless the kind of low sulfur diesel fuel adopted in this rule is available.

As for gasoline engines and vehicles, improvement continues to be made to gasoline emissions control technology. This includes improvement to catalyst designs in the form of improved washcoats and improved precious metal dispersion. Much effort has also been put into improved cold start strategies that allow for more rapid catalyst light-off. This can be done by retarding the spark timing to increase the temperature of the exhaust gases, and by using air-gap manifolds, exhaust pipes, and catalytic converter shells to decrease heat loss from the system.

These improvements to gasoline emission controls will be made in response to the California LEV–II standards and the federal Tier 2 standards.[83] These improvements should transfer well to the heavy-duty gasoline segment of the fleet. With such migration of light-duty technology to heavy-duty vehicles and engines, we believe that considerable improvements to heavy-duty gasoline emissions can be realized, thus allowing vehicles to meet the much more stringent standards adopted today.

The following discussion provides more detail on the technologies we believe are most capable of meeting very stringent heavy-duty emission standards. The goal of this discussion is to describe the emission reduction capability of these emission control technologies and their critical need for diesel fuel sulfur levels as low as those being finalized today. But first, we present the details of the new emission standards being finalized today.

C. What Engine and Vehicle Standards Are We Finalizing?

1. Heavy-Duty Engine Exhaust Emissions Standards

a. FTP Standards [84]

The emission standards finalized today for heavy-duty engines are summarized in Table III.C–1. For reasons explained below, the phase-in schedule for these standards differs from the proposed schedule. We are also finalizing an incentive provision to encourage the early introduction of engines meeting these new standards. This incentive provision is explained in section III.D. In addition, we have altered our Averaging, Banking, and Trading (ABT) provisions from what was proposed. The final ABT provisions are discussed in detail in section VI.

TABLE III.C–1.—FULL USEFUL LIFE HEAVY-DUTY ENGINE EXHAUST EMISSIONS STANDARDS AND PHASE-INS FOR INCOMPLETE VEHICLES

		Standard (g/bhp-hr)	Phase-In by Model Year [a]			
			2007	2008	2009	2010
Diesel	NO_X	0.20	50%	50%	50%	100%
	NMHC	0.14	50%	50%	50%	100%
	PM	0.01	100%	100%	100%	100%
Gasoline	NO_X	0.20	0%	50%	100%	100%
	NMHC	0.14	0%	50%	100%	100%
	PM	0.01	0%	50%	100%	100%

[a] Percentages represent percent of sales.

With respect to PM, this new standard represents a 90 percent reduction for most heavy-duty diesel engines from the current PM standard. The current PM standard for most heavy-duty engines, 0.10 g/bhp-hr, was implemented in the 1994 model year; the PM standard for urban buses implemented in that same year was 0.05 g/bhp-hr; these standards are not changing when other standards change in the 2004 model year timeframe. The new PM standard of 0.01 g/bhp-hr being finalized today is projected to require the addition of highly efficient PM traps to diesel engines, including those diesel engines used in urban buses; it is not expected to require the addition of any new hardware for gasoline engines.

With respect to NMHC and NO_X, these new standards represent significant reductions from the 2004 diesel engine standard which is either 2.4 g/bhp-hr NO_X+NMHC, or 2.5 g/bhp-hr NO_X+NMHC with a cap on NMHC of 0.5 g/bhp-hr. We generally expect that 2004 diesel engines will meet those standards with emission levels around 2.2 g/bhp-hr NO_X and 0.2 g/bhp-hr NMHC. Like the PM standard, the new NO_X standard is projected to require the addition of a highly efficient NO_X emission control system to diesel engines which, with help from the PM trap, will need to be optimized to control NMHC emissions. For gasoline

[83] See Chapter IV.A of the final Tier 2 Regulatory Impact Analysis, contained in Air Docket A–97–10, and McDonald, Joseph, and Jones, Lee, ''Demonstration of Tier 2 Emission Levels for Heavy Light-Duty Trucks,'' SAE 2001–01–1957.

[84] The Phase 1 heavy-duty rule recently promulgated by EPA specified two supplemental sets of standards for heavy-duty diesel engines. (See 65 FR 59896, October 6, 2000.) Manufacturers of heavy-duty diesel engines must meet these supplemental standards, the Supplemental Emission Test (SET, formerly referred to as the Supplemental Steady-State (SSS) test) and the Not-to-Exceed (NTE) standards, beginning in model year 2007, in addition to meeting the preexisting standards, which must be met using the preexisting federal test procedure (FTP). For the purposes of this preamble, we refer to the standards met using the preexisting FTP as the FTP standards, though the SET and NTE test procedures have now been added to the regulations establishing the various federal test procedures for heavy-duty diesel engines.

engines, the 2005 model year standard recently finalized in the Phase 1 heavy-duty rule is 1.0 g/bhp-hr NO_X+NMHC. (See 65 FR 59896, October 6, 2000.) There is a direct trade off between NO_X and NMHC emissions with a gasoline engine, but we would generally expect NO_X levels over 0.5 g/bhp-hr and NMHC levels below that. Regardless of the NO_X and NMHC split, today's standards represent significant reductions for 2008 and later engines that will require substantial improvement in the effectiveness of heavy-duty gasoline emission control technology.

We proposed a new formaldehyde standard of 0.016 g/bhp-hr for both heavy-duty diesel and gasoline engines. However, we have decided not to finalize those standards. We proposed the formaldehyde (HCHO) standard because it is a hazardous air pollutant that is emitted by heavy-duty engines and other mobile sources. In the proposal, we stated our belief that formaldehyde emissions from gasoline and diesel engines are and will remain inherently low, but having the standard would ensure that excess emissions would not occur. Several commenters took issue with our proposed standard claiming that the benefits were nonexistent, that we should address toxic emissions in our toxics rulemaking, and that we had shown neither its technological feasibility nor its measurability. After further consideration we do believe that the proposed formaldehyde standard is not necessary because the NMHC standard we are promulgating today will almost certainly result in formaldehyde emissions well below our proposed formaldehyde standard. As a result, other comments on this issue such as those concerning technological feasibility and measurability are no longer relevant to this rule. We will continue to evaluate this issue to ensure that formaldehyde emissions do not become a problem in the future and may take action to consider standards if warranted.

We believe a phase-in of the diesel NO_X standard is appropriate. With a phase-in, manufacturers are able to introduce the new technology on a portion of their engines, thereby gaining valuable experience with the technology prior to implementing it on their entire fleet. Also, we are requiring that the NO_X, and NMHC standards be phased-in together for diesel engines. That is, engines will be expected to meet both of these new standards, not just one or the other. We are requiring this because the standard finalized in the Phase 1 heavy-duty rule is a combined NMHC+NO_X standard. With separate NO_X and NMHC phase-ins, say 50/50/50/100 for NO_X and 100 percent in 2007 for NMHC, the 2.5 gram engines being phased-out would have a 2.5 gram NO_X+NMHC standard and a new 0.14 gram NMHC standard with which to comply. While this could be done, we believe that it introduces unnecessary compliance complexity to the program.

In our NPRM, we requested comment on a range of possible phase-in schedules for NO_X including anything from our primary proposal of 25/50/75/100 percent phase-in to a possible requirement for 100 percent compliance in the 2007 model year. We have determined that a 50/50/50/100 percent phase-in schedule is the most appropriate schedule for several reasons.

Some commenters argued that we should require 100 percent compliance in the 2007 model year because of the 0.20 gram standard was both technologically feasible and critical given the nation's air quality needs. Other commenters were concerned that 100 percent compliance to the 0.20 gram NO_X standard in the first year of the program was ill advised as it would provide little opportunity for industry to ''field test'' new NO_X control technologies. These commenters also expressed concern over workload burdens on industry members needing to redesign all of their new engines and vehicles in one year. Some commenters were concerned that a 25/50/75/100 percent phase-in schedule would introduce competitiveness issues whereby those vehicles equipped with new NO_X control technology may be less attractive to some buyers than vehicles without the technology, making them difficult for manufacturers to sell.

We set standards and implementation schedules based on many factors including technological feasibility, cost, energy, and safety. Considering these factors, we believe that industry should be provided the flexibility of having a phase-in of the new NO_X standard. As discussed in section III.E below, we believe the 0.20 gram NO_X standard is feasible in the 2007 time frame. However, we believe a phase-in is appropriate for a couple of reasons. First, the phase-in will provide industry with the flexibility to roll out the NO_X control technology on only a portion of their fleet. This will allow them to focus their resources on that half of their fleet being brought into compliance in 2007. This ability to focus their efforts will increase both the efficiency and the effectiveness of those efforts. Second, a phase-in allows industry the ability to introduce the new technology on those engines it believes are best suited for a successful implementation which, in turn, provides a valuable opportunity to refine that technology on only a portion of their product line prior to the next push toward full implementation.

Another concern with respect to our proposed phase-in schedule was raised by several commenters and pertains to its interaction with the final implementation schedule for the new supplemental requirements (the Supplemental Emission Test, SET, and the Not-to-Exceed, NTE). These requirements, finalized in the Phase 1 heavy-duty final rule, will be implemented in the 2007 model year on all heavy-duty diesel engines. (See 65 FR 59896, October 6, 2000.) Under a 25/50/75/100 percent phase-in schedule of new diesel engine emission requirements, 25 percent of engines in the 2007 model year would meet 0.20 and 0.01 g/bhp-hr NO_X and PM, while 75 percent would meet 2.5 and 0.01 g/bhp-hr NO_X and PM. Further, all of those engines would be required, beginning in the 2007 model year, to meet the supplemental requirements based on the FTP emission standards to which they were certified. A 25/50/75/100 percent phase-in schedule would change the supplemental requirements for those 25 percent of engines in the 2008 model year that would have to change to meet the new 50 percent compliance requirement. This change would be required even though the supplemental requirements on those 25 percent of engines were first implemented only one model year earlier, in model year 2007. Commenters have questioned whether this is consistent with section 202(a)(3)(c) of the Clean Air Act, which requires that standards for heavy-duty vehicles and engines apply for no less than three model years without revision. Under this argument, the supplemental requirements implemented in the 2007 model year must be allowed three model years of stability, meaning that no changes can be required to those standards until the 2010 model year.

The final phase-in schedule, 50/50/50/100 percent, addresses any concerns about violating the stability requirement of the Act and addresses the technology and lead time benefits of a phase-in as discussed above.[85] While this phase-in does not provide certain commenters with their goal of 100 percent implementation of very low NO_X engines in 2007, we believe it is

[85] EPA need not determine, at this time, whether the 25/50/75/100 percent phase-in schedule violates section 202(a)(3)(c), as the 50/50/50/100 percent phase-in schedule clearly does not and is available to all manufacturers.

appropriate for the technology, cost, and other reasons described above. This 50/50/50/100 percent phase-in schedule does provide a more rapid implementation of low NO_X engines and, more importantly, provides more air quality benefits in 2007 than would our proposed phase-in schedule. We are also finalizing provisions that would encourage manufacturers to introduce clean technology, both diesel and gasoline, earlier than required in return for greater flexibility during the later years of our phase-in. These optional early incentive provisions are analogous to those included in our light-duty Tier 2 rule and are discussed in more detail in section III.D. We have also revised our Averaging, Banking, and Trading program to increase flexibility as discussed further in section VI.

For gasoline engines, we proposed 100 percent compliance in the 2007 model year. However, since the proposal was published, we have set new standards for heavy-duty gasoline engines that take effect in the 2005 model year. Therefore, the three year stability requirement of the CAA requires that today's new standards not apply until the 2008 model year at the earliest. Further, while we had not proposed a phase-in for gasoline standards, based on comments received we believe that a phase-in should be provided. The phase-in will allow manufacturers to implement improved gasoline control technologies on their heavy-duty gasoline engines in the same timeframe as they implement those technologies on their Tier 2 medium-duty passenger vehicles (MDPV). This consistency with Tier 2 is discussed in more detail below in section III.C.2 on vehicle standards. Note that the gasoline engine phase-in schedule is the same as but separate from the gasoline vehicle phase-in schedule discussed below. As we have done for diesel engines, we have also revised our Averaging, Banking, and Trading program for gasoline engines to increase flexibility as discussed further in section VI.

For a discussion of why we believe these standards are technologically feasible in the time frame required, refer to section III.E below and for a more detailed discussion refer to the RIA contained in the docket. The averaging, banking, and trading (ABT) provisions associated with today's standards are discussed in Section VI of this preamble. The reader should refer to that section for more details.

b. Supplemental Provisions for HD Diesel Engines (SET & NTE)

In addition to the new FTP standards for HD diesel engines contained in today's final action, we are also finalizing the supplemental emission standards we proposed to apply to the new HDDEs, with a number of changes as discussed in this section. The supplemental provisions will help ensure that HD diesel engines achieve the expected in-use emission reductions over a wide range of vehicle operation and a wide range of ambient conditions, not only the test cycle and conditions represented by the traditional FTP. The Agency has historically relied upon the FTP and the prohibition of defeat devices to ensure that HDDE emission control technologies which operate during the laboratory test cycle continue to operate in-use. The supplemental provisions are a valuable addition to the FTP and the defeat device prohibition to ensure effective in-use emission control. The supplemental provisions for HD diesel engines consist of two principal requirements, the supplemental emission test and associated standards (SET),[86] and the not-to-exceed test and associated standards (NTE). The supplemental emission standards finalized today for heavy-duty diesel engines are summarized in Table III.C–2.

TABLE III.C–2.—FULL USEFUL LIFE HEAVY-DUTY DIESEL ENGINE SUPPLEMENTAL EXHAUST EMISSIONS STANDARDS

Supplemental test	Requirements for NO_X, NMHC, PM
Supplemental emission test.	1.0 × FTP standard (or FEL).
Not-to-exceed test	1.5 × FTP standard (or FEL).

The SET and NTE test procedures were recently adopted for 2007 on-highway HD diesel engines. (See 65 FR 59896, October 6, 2000.) In the recent HD Phase 1 rulemaking which promulgated the SET and NTE, the supplemental provisions were finalized in the context of the emission control technology expected to be used to meet the 2004 FTP standards, *i.e.,* injection timing strategies and cooled EGR. In this final action, we are finalizing a number of changes to the supplemental provisions to address specific technical issues raised by commenters and which result from the expected application of high efficiency exhaust emission control devices on HD diesel engines and vehicles to meet today's new standards. These changes are minor in nature and will not impact the emission reductions we expect from the Phase 2 standards. These changes are discussed in the following sections. Additional discussion regarding the supplemental provisions for HDDEs is contained in the RIA and the Response to Comments (RTC) for this final rule, as well as in Section III.E of this preamble (''Feasibility of the New Engine and Vehicle Standards'').

i. Supplemental Emission Test

We are finalizing supplemental emission test provisions for HD diesel engines and vehicles certified to the new FTP standards contained in this final rule. The SET emission standard is equal to 1.0 times the FTP standard or FEL for HD diesel engines. Emission results from this test must meet the numerical standards for the FTP. The SET requirements are phased-in beginning with the 2007 model year, consistent with the phase-in of the new FTP standards. The supplemental emission test duty cycle consists of 13 modes of speed and torque, primarily covering the typical highway cruise operating range of heavy-duty diesel engines. The emission results from each of the modes are weighted by defined factors in the regulations, and the final weighted emission value for each pollutant must meet the SET standard. In addition, several of the 13 individual modes are in the NTE control zone, and must meet the applicable NTE requirements. The SET test is a laboratory test performed using an engine dynamometer under the same conditions which apply to the FTP, as specified in the regulations. (See 40 CFR 86.1360.)

The regulations for the SET in model year 2007 as they apply to the 2004 FTP emission standards contain additional steady-state test point emission limits. The Phase 1 supplemental requirements define a ''Maximum Allowable Emission Limit'' (MAEL) which the engines must comply with. The Phase 1 regulations allowed EPA to randomly select up to three steady-state test points prior to certification which the manufacturer would test to show compliance with the MAEL. These test points are referred to as ''mystery points''. In this final rule we have eliminated the MAEL for engines certified to the Phase 2 standards. The MAEL assures that an engine is calibrated to maintain emission control similar to the SET test under steady state conditions across the engine map, not just at the pre-defined 13 test points

[86] In the Phase 1 rulemaking, the Supplemental Emission Test was referred to as the supplemental steady state test. As discussed in the Phase 1 rule, the supplemental steady state test is based on and is consistent with the European Commissions ''EURO III ESC'' test. (See 65 FR 59915.) In this final rule we have renamed the supplemental steady state test the Supplemental Emission Test (SET).

which comprise the SET test. For Phase 1 engines the MAEL was necessary to ensure this potential for gaming did not occur because the difference between the FTP standard and the NTE standard could be large, for example, 0.625 g/bhp-hr for NMHC + NO_X. However, for Phase 2 engines the NTE requirements are a mere 0.10 g/bhp-hr NO_X greater than the FTP standard. Considering this small increment, we have eliminated the MAEL for Phase 2 engines because it is redundant with the NTE. For the same reasons, we have eliminated the certification ''mystery points'' for engines complying with today's diesel engine standards.

ii. Not-to-Exceed

We are also finalizing revisions to the not-to-exceed emission standards for HD diesel engines certified to the Phase 2 FTP standards contained in this final rule. These NTE procedures apply under engine operating conditions within the range specified in the NTE test procedure that could reasonably be expected to be seen in normal vehicle operation and use. (See 40 CFR 86.1370.) The NTE procedure defines limited and specific engine operating regions (*i.e.,* speed and torque conditions) and ambient operating conditions (*i.e.,* altitude, temperature, and humidity conditions) which are subject to the NTE emission standards. Emission results from this test procedure must be less than or equal to 1.5 times the FTP standards (or FEL) for NO_X, NMHC, and PM. The new NTE requirements are phased-in starting with the 2007 model year, consistent with the new FTP standards.

The Not-To-Exceed (NTE) provisions were recently finalized for HDDEs certified to the 2004 FTP emission standards with implementation beginning in model year 2007. (See 65 FR 59896, October 6, 2000.) The NTE approach establishes an area (the ''NTE control area'') under the torque curve of an engine where emissions must not exceed a specified value for any of the regulated pollutants.[87] The NTE requirements would apply under engine operating conditions that could reasonably be expected to be seen in normal vehicle operation and use which occur during the conditions specified in the NTE test procedure. (See 40 CFR 86.1370.) This test procedure covers a specific range of engine operation and ambient operating conditions (*i.e.,* temperature, altitude, and humidity). The NTE control area, emissions standards, ambient conditions and test procedures for HDDEs are described in the regulations.

The NTE multiplier promulgated in the previous final rulemaking for HD diesel engines certified to the 2004 FTP standards is 1.25 × FTP standard (*e.g.,* 1.25 × 2.5g/bhp-hr NMHC+NO_X and 1.25 × 0.1 g/bhp-hr PM). We believe the NTE cap finalized today (1.5 × the Phase 2 FTP standards or FEL) allows sufficient headroom above the FTP standard to accommodate the technical challenges necessary to meet the NTE standard which must be met over a broader range of ambient conditions, a shorter time period, and a wider variety of operating conditions, than the FTP or the SET. While the 1.5 NTE multiplier we are finalizing is greater than what we proposed, in absolute terms the NTE requirement for Phase 2 engines is much smaller than for Phase 1 engines (*i.e.,* the magnitude of the cap in g/bhp-hr emissions), and the Phase 2 NTE cap will help ensure the emission reductions we expect from the Phase 2 standards will occur in-use. The NTE requirements have been modified from what we proposed based on our assessment of the emission performance of the exhaust emission control devices that will be used to meet the new FTP standards (*e.g.,* catalyzed particulate traps and NO_X adsorbers). Under the program finalized today, an NTE limit of 1.5 × the NO_X FEL would apply to 2007 and later model year engines certified with FELs less than 1.5 g/bhp-hr NO_X. As discussed throughout this notice, the stringent 2007 PM standard, 0.01 g/bhp-hr, can be met with the use of catalyzed particulate traps. Because of the very low particulate matter emissions which will be emitted by engines meeting the PM standard, this final rule also establishes a minimum PM NTE requirement for engines certified with FELs below 0.01 g/bhp-hr at 1.5 × the FTP standard, not the FEL. Based on our assessment of the expected exhaust emission control devices and their performance, the NTE standard of 1.5 × FTP standard is both technologically feasible and appropriate. A detailed discussion of the feasibility of the NTE requirements is contained in the RIA for this final rule.

Today's action allows the NTE deficiency provisions we recently finalized for 2007 HDDEs meeting the 2004 FTP standards to be used by HDDEs meeting the standards contained in today's final rule (See 40 CFR 86.007–11(a)(4)(iv) in the regulations, and 65 FR 59914 of the Phase 1 rule for a detailed discussion of the NTE deficiencies.). These deficiency provisions are similar to the deficiency provisions which currently apply to LD and HD on-board diagnostic systems. This will allow the Administrator to accept a HDDE as compliant with the NTE even though some specific requirements are not fully met. This provision will be available for manufacturers through 2013, though it will be more limited after 2009 as described below. In the Phase 1 rule, the Agency finalized deficiency provisions which were allowed through model year 2009. In this rule, it is appropriate to extend the availability of the NTE deficiency provisions beyond 2009. Given the nature of the phase-in requirements in this rule, manufacturers may be introducing new engine families certified to the Phase 2 NO_X and NMHC standards as late as model year 2010, and these families may need limited access to a NTE deficiency for a few years after their introduction. Therefore, we have extended the availability of deficiencies through model year 2013, but with one constraint. Given the considerable lead time available, we have limited the number of deficiencies to three per engine family for 2010 through 2013.

In addition, we have made a number of changes to the NTE requirements to address specific technical issues which arise from the application of high efficiency exhaust emission control devices to HDDEs. These provisions will only be summarized here. A detailed discussion is contained in the RIA and the RTC for this final rule. These changes include: engine start-up provisions; exhaust emission control device warm-up provisions; modifications of the NTE control zone; and adjustments to the NTE minimum emissions sample time.

Under this final rule, the NTE requirements will not apply during engine start-up conditions. EPA intended to include the provision excluding start-up provisions from the NTE requirements under the Phase 1 rulemaking, and it was discussed in the preamble for both the Phase 1 proposal and final rule. However, this provision was inadvertently left out of the regulations. We have corrected this in today's rule for both Phase 1 and Phase 2 engines. In addition, with the application of advanced exhaust emission control devices, an exhaust emission control device warm-up provision is a necessary criterion for the NTE. Specifically, until the exhaust gas temperature on the outlet side of the exhaust emission control device(s)

[87] Torque is a measure of rotational force. The torque curve for an engine is determined by an engine ''mapping'' procedure specified in the Code of Federal Regulations. The intent of the mapping procedure is to determine the maximum available torque at all engine speeds. The torque curve is merely a graphical representation of the maximum torque across all engine speeds.

achieves 250 degrees Celsius, the engine is not subject to the NTE. Additional discussion of this provision is contained in the RIA.

We have made three changes to the NTE engine control zone. First, we have expanded the NTE engine control zone for engines certified to the new 0.01 g/bhp-hr PM standard. The NTE requirements as specified in the regulations for engines certified to the 2004 FTP standards provide specific ''PM carve-outs'' to the NTE control zone. These carve-outs define an area of the engine operating regime (speed and torque area) to which the NTE does not apply for PM emissions. (See 65 FR 59961.) The PM only carve-outs were specified because, under certain engine operating regions, the NTE requirements for PM could not be met with the technology projected to be used to meet the 2004 FTP standards. However, as discussed in the RIA, the advanced PM trap technology that will be used to meet the PM standard contained in today's final rule is very efficient at controlling PM emissions across the entire NTE control zone. Due to the high PM reduction capabilities of catalyzed PM traps, there is no need for the PM specific carve-outs. Therefore, we have eliminated the NTE PM carve-outs for Phase 2 engines. Second, we have added a provision which would allow a manufacturer to exclude defined regions of the NTE engine control zone from NTE compliance if the manufacturer could demonstrate that the engine, when installed in a specified vehicle(s), is not capable of operating in such regions. Finally, we have added a provision which would allow a manufacturer to petition the Agency to limit testing in a defined region of the NTE engine control zone during NTE testing. This optional provision would require the manufacturer to provide the Agency with in-use operation data which the manufacturer could use to define a single, continuous region of the NTE control zone. This single area of the control zone must be specified such that operation within the defined region accounts for 5 percent or less of the total in-use operation of the engine, based on the supplied data. Further, to protect against gaming by manufacturers, the defined region must generally be elliptical or rectangular in shape, and share a boundary with the NTE control zone. If approved by EPA, the regulations then disallow testing with sampling periods in which operation within the defined region constitutes more than 5.0 percent of the time-weighted operation within the sampling period.

We have also changed the minimum emissions sample time approach for NTE testing to address technical issues specific to the advanced exhaust emission control devices anticipated to be used to meet the NTE requirements. We proposed that the minimum emission sample time for the NTE was 30 seconds, which is what we recently finalized for engines certified to the Phase 1 standards. This short sample time was sufficient to ensure that momentary spikes in emissions (*e.g.,* such as could occur in a two or three second time frame) could not be isolated for determining compliance with the NTE (*e.g.,* an NTE test must be no shorter than a 30 second average). However, the use of highly efficient exhaust emission control devices complicates the minimum sample time requirements because of the potential for short-duration emission increases during regeneration events. We have adjusted the minimum sample time requirements to address this issue as follows (a detailed discussion of the need for this change is contained in the RIA). The regulations specify that the NTE sample time can be as short as 30 seconds provided no regeneration events occur within the sample period. However, if a regeneration event is included in the sample time, the sample time must include the period of time from the start of one regeneration event to the start of the next regeneration event, for each regeneration included in the sample. A regeneration event is determined by the engine manufacturer. This second provision regarding the minimum NTE sample time also cannot be shorter than 30 seconds. This sample time provision applies to any HDDE engine equipped with an exhaust emission control device which requires discreet regeneration events, regardless of the nature of the regeneration (*e.g.,* NO_X regeneration, desulfation).

c. Crankcase Emissions Control

Crankcase emissions are the pollutants that are emitted in the gases that are vented from an engine's crankcase. These gases are also referred to as ''blowby gases'' because they result from engine exhaust from the combustion chamber ''blowing by'' the piston rings into the crankcase. These gases are vented to prevent high pressures from occurring in the crankcase. Our emission standards have historically prohibited crankcase emissions from all highway engines except turbocharged heavy-duty diesel engines. The most common way to eliminate crankcase emissions has been to vent the blowby gases into the engine air intake system, so that the gases can be recombusted. We made the exception for turbocharged heavy-duty diesel engines in the past because of concerns about fouling that could occur by routing the diesel particulates (including engine oil) into the turbocharger and aftercooler. Our concerns are now alleviated by newly developed closed crankcase filtration systems, specifically designed for turbocharged heavy-duty diesel engines. These new systems (discussed more fully in Section III.E below and in Chapter III of the Final RIA) are already required for new on-highway diesel engines under the EURO III emission standards.

In today's action, we are eliminating the exception for turbocharged heavy-duty diesel engines starting in the 2007 model year. Manufacturers will be required to control crankcase emissions from these engines, preferably by routing them back to the engine intake or to the exhaust stream upstream of the exhaust emission control devices. However, in response to the manufacturers' comments, we are finalizing the crankcase control requirement to allow manufacturers to treat crankcase emissions from these engines the same as other exhaust emissions (*i.e.,* we provide a performance requirement and leave the design to the manufacturer). Under this allowance, manufacturers could potentially discharge some or all of the crankcase emissions to the atmosphere, but only if they were able to keep the combined total of the crankcase emissions and the other exhaust emissions below the applicable exhaust emission standards. They could do this by routing the crankcase gases into the exhaust stream downstream of the exhaust emission control devices, or by continuing the current practice of venting the gases to the engine compartment. But, they could take either of these approaches only if they make sure that the combined total of the crankcase emissions and the other exhaust emissions are below the applicable exhaust emission standards. Also, the manufacturer would have to ensure that the crankcase emissions were readily measurable during laboratory and in-use field testing.[88] Despite this allowance made at the request of commenters, given the low levels of today's final standards we believe that manufacturers will have to close the crankcases of all of their

[88] During laboratory testing, the crankcase emissions would need to be vented in a controlled manner so that they could be routed into the dilution tunnel to ensure their proper measurement and inclusion in the tested emission level.

engines by either routing the crankcase emissions into the engine intake or by routing them into the exhaust upstream of the exhaust emission control devices.

d. On-Board Diagnostics (OBD)

The Phase 1 heavy-duty final rule put into place OBD requirements for heavy-duty diesel and gasoline engines weighing 14,000 pounds or less. (See 65 FR 59896, October 6, 2000.) In that rule, the OBD thresholds for malfunction identification are based on multiples of the applicable FTP emission standards to which the engine is certified. Given the structure of the 2004 FTP emission standards (2005 FTP emission standards for gasoline engines), which are combined NMHC+NO_X standards, the OBD thresholds are based on a multiple of the combined FTP standards. However, the structure of the 2007 FTP standards (2008 for gasoline engines) finalized today is not a combined NMHC+NO_X standard, but is instead a separate NO_X and a separate NMHC standard.

Therefore, today's final rule is revising the existing section of the regulations to link OBD thresholds to whatever the appropriate standards are whether they are the combined FTP standards or the new separate FTP standards finalized today. This is consistent with the intent of our OBD requirements since inception—that the OBD thresholds be based on the FTP standards to which the vehicle or engine has been certified.

We are also revising the phase-in for the OBD requirements finalized in the Phase 1 rule. (See 65 FR 59896.) In that rule, OBD systems were required to phase-in on a schedule of 60/80/100 percent beginning in the 2005 model year. At least one commenter claimed that the OBD phase-in may require multiple changes to OBD systems in consecutive years, because OBD systems are tied to the FTP standards to which they are certified.[89] We have decided, for diesel engine OBD systems, to revise the 60/80/100 percent phase-in to 50/50/100 percent beginning in the 2005 model year. This revised phase-in not only alleviates the commenter's concerns, but also makes the OBD phase-in consistent with the implementation of new emission standards.

In addition, we have decided, for gasoline engine OBD systems, to revise the 60/80/100 percent phase-in to 60/80/80/100 percent beginning in the 2005 model year.[90] As with the new diesel OBD phase-in, this gasoline engine OBD phase-in alleviates the commenter's concerns, and it also makes the gasoline OBD phase-in more consistent with the implementation of new emission standards while maximizing the percentage of gasoline engines designed to meet the OBD requirements.

We also received comments suggesting that we commit to making any necessary changes to the OBD requirements based on the outcome of future rulemaking efforts by the California Air Resources Board (ARB). While we cannot make any such commitment, nor do we believe the commenter truly would want us to commit to making changes solely because ARB made changes, we do intend to continue our normal practice of working closely with ARB and harmonizing our OBD requirements where appropriate. Of course, any changes to our OBD requirements could only be done via rulemaking.[91]

2. Heavy-Duty Vehicle Exhaust Emissions Standards[92]

a. FTP Standards

The emission standards being finalized today for heavy-duty gasoline vehicles are summarized in Table III.C–3. We have already required that all complete heavy-duty gasoline vehicles, whether for transporting passengers or for work, be chassis certified. (See 65 FR 59896, October 6, 2000.) Current federal regulations do not require that complete diesel vehicles over 8,500 pounds be chassis certified; instead, our regulations have traditionally required certification of their engines. Today's final rule allows, as an option, chassis certification of complete heavy-duty diesel vehicles under 14,000 pounds. This option is discussed in more detail later in this section.

The Tier 2 final rule created a new vehicle category called ''medium-duty passenger vehicles.''[93] These vehicles, both gasoline and diesel, are required to meet requirements of the Tier 2 program, which carries with it a chassis certification requirement. As a result, diesel medium-duty passenger vehicles must certify using the chassis certification test procedure.[94] Today's heavy-duty vehicle based standards, or chassis standards, for 2008 and later model year heavy-duty gasoline vehicles would apply to the remaining complete gasoline vehicles under 14,000 pounds and those complete diesel vehicles under 14,000 pounds choosing the chassis certification option; these complete vehicles are typically used for commercial, non-passenger applications. The standards shown in Table III.C–3 are, we believe, comparable in stringency to the diesel and gasoline engine standards shown in Table III.C–1.

[89] EPA does not believe there would be any legal stability concern even if we had kept the OBD phase-in as finalized in the Phase 1 rule. However, EPA agrees with the commenter that the phase-in as finalized in the Phase 1 rule would have complicated compliance unnecessarily.

[90] For those manufacturers choosing compliance Options 1 or 2 as part of the Phase 1 program, the gasoline engine OBD phase-in will become 40/60/80/80/100 percent beginning in model year 2004. (See 65 FR 59896, October 6, 2000.)

[91] This comment also pertained to gasoline vehicle-based OBD systems. Our statements made here pertain to those requirements as well but are not repeated below in section III.2.c.

[92] As noted above, vehicle and engine standards apply to all vehicles and engines, even if they are alternative fueled vehicles and engines.

[93] Medium-duty passenger vehicles are defined as any complete vehicle between 8,500 and 10,000 pounds GVWR designed primarily for the transportation of persons. The definition specifically excludes any vehicle that (1) has a capacity of more than 12 persons total or, (2) is designed to accommodate more than 9 persons in seating rearward of the driver's seat or, (3) has a cargo box (*e.g.,* pick-up box or bed) of six feet or more in interior length. (See the Tier 2 final rulemaking, 65 FR 6698, February 10, 2000.)

[94] The Tier 2 final rule did make a limited allowance for engine certification of diesel MDPVS through the 2007 model year. The reader should refer to the Tier 2 final rule for details on that allowance. (See 65 FR 6750, February 10, 2000.)

TABLE III.C–3.—FULL USEFUL LIFE HEAVY-DUTY VEHICLE EXHAUST EMISSIONS STANDARDS AND PHASE-INS FOR COMPLETE VEHICLES [a]

[Grams/mile]

Weight range (GVWR)		Standard (g/mi)	Phase-in by model year [b]	
			2008	2009
8,500 to 10,000 lbs	NO_X	0.2		
	NMHC	0.195		
	HCHO	0.032		
	PM	0.02		
10,001 to 14,000 lbs	NO_X	0.4	50%	100%
	NMHC	0.230		
	HCHO	0.040		
	PM	0.02		

[a] Does not include medium-duty passenger vehicles.
[b] Percentages represent percent of sales.

These NO_X standards represent a 78 percent reduction and a 60 percent reduction from the standards for 8,500–10,000 pound and 10,000–14,000 pound vehicles, respectively, finalized for the 2005 model year. The 2005 model year standards are equivalent to the California LEV–I NO_X standards of 0.9 g/mi and 1.0 g/mi, respectively. The NO_X standards shown in Table III.C–3 are consistent with the CARB LEV–II NO_X standards for low emission vehicles (LEVs) in each respective weight range. The NO_X standard is slightly higher for the 10,000 to 14,000 pound vehicles for several reasons: these vehicles are tested at a heavier payload; they generally have a larger frontal area which creates more drag on the engine and requires it to work harder; and their in-use duty cycle tends to be more severe. The increased weight results in using more fuel per mile than vehicles tested at lighter payloads; therefore, they tend to emit slightly more grams of pollutant per mile than lighter vehicles.[95]

The NMHC standards finalized today represent a 30 percent reduction from the 2005 standards for 8500–10,000 and 10,000–14,000 pound vehicles. The 2005 model year standards require such vehicles to meet NMHC standard levels of 0.28 g/mi and 0.33 g/mi, respectively (equal to the California LEV–I nonmethane organic gases (NMOG) standard levels). These new NMHC standards are consistent with the CARB LEV–II NMOG standards for LEVs in each respective weight class. The NMHC standard for 10,000–14,000 pound vehicles is higher than for 8,500–10,000 pound vehicles for the same reason as stated above for the higher NO_X standard for such vehicles.

The formaldehyde (HCHO) standards shown in Table III.C–3 are not the standards we proposed. The standards we are finalizing are equivalent to the California LEV–II LEV category standards. This approach is being taken to maintain consistency with the approach taken on NO_X and NMHC standards. Although we are not finalizing formaldehyde standards for engine certified systems, because all the exhaust emission standards for complete vehicles are consistent with the CARB LEV II standards, we believe it is appropriate to maintain the formaldehyde standard for gasoline vehicles. Formaldehyde is a hazardous air pollutant that is emitted by heavy-duty vehicles and other mobile sources, and we are finalizing these formaldehyde standards to prevent excessive formaldehyde emissions. These standards are especially important for any methanol-fueled vehicles because formaldehyde is chemically similar to methanol and is one of the primary byproducts of incomplete combustion of methanol. Formaldehyde is also emitted by vehicles using petroleum fuels (i.e., gasoline or diesel fuel), but to a lesser degree than is typically emitted by methanol-fueled vehicles. We expect that petroleum-fueled vehicles able to meet the NMHC standards should comply with the formaldehyde standards with large compliance margins. Based upon our analysis of the similar Tier 2 standards for passenger vehicles, we believe that formaldehyde emissions from petroleum-fueled vehicles when complying with the new PM, NMHC and NO_X standards should be as much as 90 percent below the standards.[96] Thus, to reduce testing costs, we are finalizing a provision that permits manufacturers of petroleum-fueled vehicles to demonstrate compliance with the formaldehyde standards based on engineering analysis. This provision requires manufacturers to make a demonstration in their certification application that vehicles having similar size and emission control technology have been shown to exhibit compliance with the applicable formaldehyde standard for their full useful life. This demonstration is expected to be similar to that required to demonstrate compliance with the Tier 2 formaldehyde standards.

The PM standard is 80 percent lower than the CARB LEV–II LEV category PM standard of 0.12 g/mi, which actually applies only to diesel vehicles. Note that the PM standard shown in Table III.C–3 represents not only a stringent PM level, but a new standard for federal HDVs where none existed before. Both the California LEV II program for heavy-duty diesel vehicles and the federal Tier 2 standards for over 8,500 pound gasoline and diesel vehicles designed for transporting passengers contain PM standards. The PM standard finalized today is consistent with the light-duty Tier 2 bins 7 and 8 level of 0.02 g/mi.

The timing for our final gasoline vehicle standards differs from what we had proposed. Our proposal had no phase-in, requiring 100 percent compliance in the 2007 model year. However, since the proposal was published, we have set new standards for heavy-duty gasoline complete vehicles that take effect in the 2005 model year. Therefore, the three year stability requirement of the CAA requires that today's new standards not apply until the 2008 model year at the earliest. Further, based on comments

[95] Engine standards, in contrast, are stated in terms of grams per unit of work rather than grams per mile. Therefore, engine emission standards need not increase with weight because heavier engines do not necessarily emit more per unit of work produced. In contrast, heavier vehicles, due to their greater mass, tend to emit more per mile due to the increased load placed on the engine which requires the engine to do more work to travel each mile.

[96] See the Tier 2 Response to Comments document contained in Air Docket A–97–10.

received, we believe that a phase-in should be provided. The phase-in will allow manufacturers to implement improved gasoline control technologies on their heavy-duty gasoline vehicles in the same timeframe as they implement those technologies on their Tier 2 medium-duty passenger vehicles (MDPV). The MDPVs generally use the same engines and emission control systems as do the heavy-duty versions of those vehicles. MDPVs must comply with our light-duty Tier 2 program at 50 percent beginning in the 2008 model year and then 100 percent in the 2009 model year. As a result of this MDPV phase-in, and the stability requirements of the CAA, and because we believe it provides the greatest emission control considering costs, we are finalizing a gasoline phase-in of 50/100 percent beginning in the 2008 model year. Commenters suggested a 40/80/100 percent phase-in beginning in the 2008 model year, but we believe that a 50/100 percent phase-in allows appropriate leadtime and synergy with the MDPV requirements of our Tier 2 program. It is worth clarifying that this phase-in excludes California complete heavy-duty vehicles, which are already required to be certified to the California emission standards. It also excludes vehicles sold in any state that has adopted California emission standards for complete heavy-duty vehicles. It would be inappropriate to allow manufacturers to ''double-count'' the vehicles by allowing them to count those vehicles both as part of their compliance with this phase-in and for compliance with California requirements. We would handle heavy-duty engines similarly if California were to adopt different emission standards than those being established by this rule.

We are also finalizing provisions that would encourage manufacturers to introduce clean technology earlier than required in return for greater flexibility during the later years of our phase-in. These optional early incentive provisions are analogous to those included in our light-duty Tier 2 rule and are discussed in more detail in section III.D.

As we have done for diesel and gasoline engines, we have revised our Averaging, Banking, and Trading program for gasoline vehicles and engines to increase flexibility as discussed further in section VI. The reader should refer to that section for more details. Note that the gasoline vehicle phase-in schedule is the same as but separate from the gasoline engine phase-in schedule discussed above. For a discussion of why we believe these standards are technologically feasible in the time frame required, refer to section III.E below, and for a more detailed discussion refer to the RIA contained in the docket.

We are also allowing complete heavy-duty diesel vehicles under 14,000 pounds to certify to the heavy-duty vehicle standards. The issue of chassis certification of diesels was raised as part of the Phase 1 rule. At that time, manufacturers expressed little interest in such a provision. Because the heavy-duty diesel industry is largely not a vertically-integrated industry, in that one company makes the engine and another makes the vehicle, chassis certification is not an immediately attractive or practical option for diesel engine manufacturers. Nonetheless, some manufacturers have begun to express interest in diesel chassis certification.[97] Also, the California Air Resources Board allows complete diesel vehicles to chassis certify. We like the idea of diesel chassis certification because it allows us to more easily evaluate such vehicles in-use. A chassis certified diesel could be acquired easily by EPA and tested in its vehicle configuration without the need to remove the engine for an engine test.

Therefore, while we fully expect that manufacturers will continue to certify the engines intended for complete diesel vehicles to the engine standards, we will allow the option to chassis certify such vehicles. Any chassis-certified complete diesel vehicles must meet the applicable Phase 2 emission standards for complete vehicles (i.e., this option is not available to diesels certified to the Phase 1 standards). In addition, while complete diesel vehicles would count against the phase-in requirements for diesel engines, they would not be allowed in the Averaging, Banking, and Trading program. Therefore, a chassis-certified diesel vehicle can neither use nor earn ABT credits, but counts as part of the 50 percent phase-in. Further, complete diesels choosing the chassis certification option would be required to comply with our federal OBD vehicle-based requirements for monitoring of exhaust emission control devices, even if choosing the option to demonstrate OBD compliance using the California OBD II requirements. Lastly, diesel vehicles choosing this option would be certified under subpart S which applies to chassis certified complete vehicles, but the evaporative emissions provisions of that subpart would not apply for diesel vehicles.

[97] See memorandum from Todd Sherwood to Air Docket A–99–06, dated December 6, 2000, Item #IV–E–47.

b. Supplemental Federal Test Procedure

We did not propose new supplemental FTP (SFTP) standards for heavy-duty vehicles. The SFTP standards control off-cycle emissions in a manner somewhat analogous to the NTE requirements for engines. We believe that the SFTP standards are an important part of our light-duty program just as we believe the NTE requirements will be an important part of our heavy-duty diesel engine program. Although we did not propose SFTP standards for heavy-duty vehicles, we stated an intention to do so via a separate rulemaking. We requested comment on such an approach, and on appropriate SFTP levels for heavy-duty vehicles along with supporting data.

We received unanimous support from industry commenters to address SFTP standards for heavy-duty vehicles in a separate rulemaking. In our Tier 2 final rule, we stated that we are currently contemplating a new SFTP rulemaking that would consider ''Tier 2'' SFTP standards for all Tier 2 vehicles, including MDPVs. California is also interested in developing more stringent SFTP standards within the context of their LEV II program and we are coordinating with California on these new SFTP standards. Given our concern over ''off cycle'' emissions, we believe it is appropriate that SFTP standards apply to all chassis certified vehicles, heavy-duty and light-duty. As part of the SFTP rule being contemplated, we expect to examine not only those issues stated in the Tier 2 rule (e.g., the SFTP test cycles and different SFTP standards for different vehicles sizes) but also the issue of heavy-duty SFTP standards.

c. On-Board Diagnostics (OBD)

The Phase 1 heavy-duty rule finalized OBD requirements for heavy-duty diesel engines, heavy-duty gasoline engines, and heavy-duty complete vehicles weighing 14,000 pounds or less. (See 65 FR 59896, October 6, 2000.) In that rulemaking, the final regulatory language stated the OBD catalyst thresholds for complete vehicles as multiples of a combined NMHC+NO_X emission standard. However, the emission standards for complete vehicles are not combined, as are the engine standards in that final rule. Therefore, the OBD catalyst thresholds for complete vehicles were not stated properly in the applicable sections of the regulations.

Today's final rule corrects that regulatory error by revising the appropriate regulatory language to link the OBD thresholds to a separate, rather than combined, set of FTP exhaust

emission standards. This is consistent with the Phase 1 heavy-duty proposal which correctly linked the proposed OBD thresholds to the separate FTP exhaust emission standards. (See 64 FR 58472, October 29, 1999.) It is also consistent with the preamble to the Phase 1 final rule, which stated the catalyst monitor threshold correctly. This change makes the OBD thresholds for complete vehicle certifications consistent with the structure used since implementation of the federal OBD requirements. (See 58 FR 9468, February 19, 1993.)

Consistent with the changes already discussed in section III.C.1, we are also revising the phase-in for complete vehicle OBD requirements finalized in the Phase 1 rule. (See 65 FR 59896.) In that rule, OBD systems were required to phase-in on a schedule of 60/80/100 percent beginning in the 2005 model year. At least one commenter pointed out that the OBD phase-in may require multiple changes to OBD systems in consecutive years because OBD systems are tied to the FTP standards to which they are certified. We have decided, for gasoline vehicle OBD systems, to revise the 60/80/100 percent phase-in to 60/80/80/100 percent beginning in the 2005 model year.[98] This revised OBD phase-in alleviates the commenter's concerns, and it makes the gasoline OBD phase-in more consistent with the implementation of new emission standards while maximizing the percentage of gasoline vehicles designed to meet the OBD requirements.

3. Heavy-Duty Evaporative Emissions Standards

We are finalizing new evaporative emission standards for heavy-duty vehicles and engines. The new standards are shown in Table III.C–4. These standards will apply to heavy-duty gasoline-fueled vehicles and engines, and methanol-fueled heavy-duty vehicles and engines. Consistent with existing standards, the standard for the two day diurnal plus hot soak test sequence would not apply to liquid petroleum gas (LPG) fueled and natural gas fueled HDVs.

TABLE III.C–4.—NEW HEAVY-DUTY EVAPORATIVE EMISSIONS STANDARDS [a]

[Grams per test]

Category	3 day diurnal + hot soak	Supplemental 2 day diurnal + hot soak [b]
8,500–14,000 lbs	1.4	1.75
>14,000 lbs	1.9	2.3

[a] To be implemented on the same schedule as the gasoline engine and vehicle exhaust emission standards shown in Tables III.C–1 and III.C–3. These new standards do not apply to medium-duty passenger vehicles, and do not apply to diesel fueled vehicles and engines.

[b] Does not apply to LPG or natural gas fueled HDVs.

These new standards represent more than a 50 percent reduction in the numerical standards as they exist today. The Phase 1 heavy-duty rule made no changes to the numerical value of the standard, but it did put into place new evaporative emission test procedures for heavy-duty complete gasoline vehicles.[99] (See 65 FR 59896, October 6, 2000.) For establishing evaporative emission levels from complete heavy-duty vehicles, the standards shown in Table III.C–4 presume the test procedures required in the Phase 1 heavy-duty rule.

The new standards for 8,500 to 14,000 pound vehicles are consistent with the Tier 2 standards for medium-duty passenger vehicles (MDPV). MDPVs are of consistent size and have essentially identical evaporative emission control systems as the remaining work-oriented HDVs in the 8,500 to 10,000 pound weight range. Therefore, the evaporative emission standards should be equivalent. We are requiring those same standards for the 10,000 to 14,000 pound HDVs because, historically, the evaporative emission standards have been consistent throughout the 8,500 to 14,000 pound weight range. We believe that the HDVs in the 10,000 to 14,000 pound range are essentially equivalent in evaporative emission control system design as the lighter HDVs; therefore, continuing this historical approach is appropriate.

We are finalizing slightly higher evaporative emission standards for the over 14,000 pound HDVs because of their slightly larger fuel tanks and for non-fuel emissions related to larger vehicle sizes. This is consistent with past evaporative emission standards. The levels chosen for the over 14,000 pound HDVs maintains the same ratio relative to the 8,500 to 14,000 pound HDVs as exists with current evaporative standards. To clarify, the current standards for the 3 day diurnal test are 3 and 4 grams/test for the 8,500 to 14,000 and the over 14,000 pound categories, respectively. The ratio of 3:4 is maintained for the new 2008 standards, 1.4:1.9.

The new standard levels are slightly higher than the California LEV-II standard levels. The California standard levels are 1.0 and 1.25 for the 3-day and the 2-day tests, respectively. However, federal vehicles are certified using the higher-volatility federal test fuel.[100] Arguably, the federal and California evaporative emission standards are equivalent in stringency despite the difference in standard levels. We believe that our standards are appropriate for federal heavy-duty vehicles.

We are requiring that the new evaporative emission standards be implemented on the same schedule as the gasoline engine and vehicle exhaust standards shown in Tables III.C–1 and III.C–3. This will allow manufacturers to plan any needed changes to new vehicles at the same time, although it is not necessary that the exhaust and evaporative standards be phased-in on the same vehicles and engines. Also, we are finalizing the revised durability provisions finalized in the Tier 2 rulemaking, which require durability demonstration using fuel containing at least 10 percent alcohol. Alcohol can break down the materials used in evaporative emission control systems. Therefore, a worst case durability demonstration would include a worst case alcohol level in the fuel (10 percent) because in some areas of the country there is widespread use of alcohol fuels.

D. Incentives for Early Introduction of Clean Engines and Vehicles

In our proposal, we requested comment on alternative phase-in approaches that could provide attractive implementation options to

[98] For those manufacturers choosing compliance Options 1 or 2 as part of the Phase 1 program, the gasoline vehicle OBD phase-in will become 40/60/80/80/100 percent beginning in model year 2004. (See 65 FR 59896.)

[99] The test procedure changes codify a commonly approved waiver allowing heavy-duty gasoline vehicles to use the light-duty driving cycle for demonstrating evaporative emission compliance. The urban dynamometer driving schedule (UDDS) used for heavy-duty vehicles is somewhat shorter than that used for light-duty vehicles, both in terms of mileage covered and minutes driven. This results in considerably less time for canister purge under the heavy-duty procedure than under the light-duty procedure. We recognize this discrepancy and have routinely provided waivers under the enhanced evaporative program that allow the use of the light-duty procedures for heavy-duty certification testing. This is consistent with CARB's treatment of equivalent vehicles.

[100] The federal test fuel specification for fuel volatility, the Reid Vapor Pressure, is 8.7 to 9.2 psi. The California test fuel specification is 6.7 to 7.0 psi.

manufacturers without compromising air quality. We requested comment on a ''declining standard'' approach and a ''cumulative phase-in'' approach. We received only limited comment on those approaches with no commenters expressing particularly strong support for them. We did receive numerous comments suggesting that we provide some form of incentive for manufacturers to introduce clean technology engines earlier than required by the base program. We are finalizing the approach discussed here as an incentive for manufacturers to introduce clean diesel engines earlier than the 2007 model year (or the 2008 model year for gasoline engines and vehicles).

In our Tier 2 rule, we stated our belief that providing inducements to manufacturers to certify vehicles early to very low levels is appropriate. We believe that such inducements may help pave the way for greater and/or more cost effective emission reductions from future vehicles. We believe the program discussed here provides a strong incentive for manufacturers to maximize their development and introduction of the best available vehicle and engine emission control technology. This, in turn, provides a stepping stone to the broader introduction of this technology soon thereafter. Early production of cleaner vehicles enhances the early benefits of our program. If a manufacturer can be induced to certify to the new standards by the promise of reasonable extra credits, the benefits of that decision to the program may last for many years.

The incentive program finalized today is analogous to the provisions set forth in the final Tier 2 rule. We are finalizing provisions that permit manufacturers to take credit for diesel engines certified to this rule's final standards prior to the 2007 model year (prior to the 2008 model year for gasoline engines or vehicles) in exchange for making fewer diesel engines certified to these standards in or after the 2007 model year (2008 for gasoline engines or vehicles). In other words, a clean engine sold earlier than required displaces the requirement to sell a similar engine later. Note that the emission standards must be met to earn the early introduction credit. That is, emission credits earned under averaging, banking, and trading cannot be used to demonstrate compliance. Therefore, the early introduction engine credit is an alternative to the ABT program in that any early engines or vehicles can earn either the engine credit or the ABT emission credit, but not both. The purpose of the incentive is to encourage introduction of clean technology engines earlier than required in exchange for added flexibility during the phase-in years.

Any early engine credits earned for a diesel-fueled engine would, of course, be predicated on the assurance by the manufacturer that the engine would indeed be fueled with low sulfur diesel fuel in the marketplace. We expect this would occur through selling such engines into fleet applications, such as city buses, school buses, or any such well-managed centrally-fueled fleet. For this reason, we believe that any engines sold within this early incentive program would be sold primarily in urban areas where more centrally-fueled fleets exist. Because of the difficulty associated with low sulfur diesel fuel availability prior to mid-2006, we believe it is necessary and appropriate to provide a greater incentive for early introduction of clean diesel technology. Therefore, we will count one early diesel engine as 1.5 diesel engines later. This extra early credit for diesel engines means that fewer clean diesel engines than otherwise would be required may enter the market during the years 2007 and later. But, more importantly, it means that emission reductions would be realized earlier than under our base program. We believe that providing incentives for early emission reductions is a worthwhile goal for this program. Therefore, we are finalizing these provisions for manufacturers willing to make the early investment in cleaner engines. For gasoline engines and vehicles, the early engine credit will be a one-for-one credit because the gasoline needed by the engine or vehicle will be readily available.

We are providing this early introduction credit to diesel engines that meet all of today's final standards (0.20 g/bhp-hr NO_X, 0.14 g/bhp-hr NMHC, and 0.01 g/bhp-hr PM). We are also providing this early introduction credit to diesel engines that pull-ahead compliance with only the 0.01 g/bhp-hr PM standard. However, a PM-only early engine can offset only PM compliant engines during the phase-in years, not NO_X, NMHC, and PM compliant engines.

An important aspect of the early incentive provision is that it must be done on an engine or vehicle count basis. That is, a diesel engine meeting new standards early counts as 1.5 such diesel engines later and a gasoline engine or vehicle early counts as one gasoline engine or vehicle later. This contrasts with a provision done on an engine percentage basis which would count one percent of diesel engines early as 1.5 percent of diesel engines later. Basing the incentive on an engine count will alleviate any possible influence of fluctuations in engine and vehicle sales in different model years.

Another important aspect of this program is that it is limited to engines sold prior to the 2007 model year (2008 for gasoline). In other words, diesel engines sold in the 2007 through 2009 model years that exceed the required 50 percent phase-in will not be considered ''early'' introduction engines and will, therefore, receive no early introduction credit. The same is true for gasoline engines and vehicles sold in the 2008 model year. However, such engines and vehicles will still be able to generate ABT credits. Note that early gasoline vehicles can count for later gasoline vehicles, and early gasoline engines can count for later gasoline engines, but early gasoline vehicles cannot be traded for later gasoline engines and vice versa.

Table III.D–1 shows an example for a diesel engine manufacturer and how it might use this incentive provision on an assumed fleet of 100 engine sales growing at one percent per year beginning in the 2004 model year.

TABLE III.D–1.—EXAMPLE ENGINE INTRODUCTION UNDER OUR EARLY INCENTIVE PROGRAM

	2004	2005	2006	2007	2008	2009	2010
Total Sales	100	101	102	103	104	105	106
Clean Engines under Base program	0	0	0	52	52	53	106
Clean Engines under Incentive Program	4	4	4	46	46	47	106

The four engines sold early in each of model years 2004 through 2006 generate a total credit of 18 engines (4×3×1.5=18). This allows the manufacturer to reduce its compliant engine count in each of model years 2007 through 2009 by six engines (18/3=6). This helps the manufacturer by reducing total costs through requiring fewer total engines at the low-emitting, clean engine level. But, more importantly, it introduces clean technology engines early and, by 2010 in this example, generates from four to six years of emission reductions that otherwise would not have occurred.

As further incentive to introduce clean engines and vehicles early, we are also finalizing a provision that would give manufacturers an early introduction credit equal to two engines during the phase-in years. This ''Blue Sky'' incentive would apply for diesel engines meeting one-half of today's final NO_X standard while also meeting the NMHC and PM standards. For gasoline engines, the same early introduction double engine credit would be available to engines sold prior to 2008 and meeting one-half the NO_X standard while also meeting the NMHC, PM, and evaporative emission standards. For gasoline vehicles, the double engine credit would be available to those vehicles certified early to the California SULEV levels and today's PM and evaporative emission standards.[101] Due to the extremely low emission levels to which these Blue Sky series engines and vehicles would need to certify, we believe that the double engine count credit is appropriate. Table III.D–2 shows the emission levels that would be required prior to the 2007 model year for diesel engines and the 2008 model year for gasoline vehicles and engines to earn any early introduction engine credits.

TABLE III.D–2.—EMISSION LEVELS AND CREDITS AVAILABLE FOR EARLY INTRODUCTION ENGINES

Category	Must meet [a]	Early engine credit [b]
Early Diesel PM-only [c]	Phase 2 PM & Phase 1 NO_X + NMHC	1.5-to-1
Early Diesel Engine [c]	All Phase 2 Standards	1.5-to-1
Early Gasoline Engine or Vehicle—Exhaust	Phase 2 Exhaust Standards	1-to-1
Early Gasoline Engine or Vehicle—Evap	Phase 2 Evaporative Standards	1-to-1
Blue Sky Series Diesel [c] or Gasoline Engine	0.10 g/bhp-hr NO_X & All other Phase 2 Standards [d]	2-to-1
Blue Sky Series Gasoline Vehicle	0.02 g/mi PM & California SULEV Level Standards [d]	2-to-1

[a] Phase 1 refers to standards required by 65 FR 59896, October 6, 2000; Phase 2 refers to today's final standards.
[b] Engine count credits must be earned prior to the phase-in years of 2007 for diesel and 2008 for gasoline.
[c] Early diesel engines must also meet the Phase 2 crankcase emissions requirements.
[d] For gasoline engines and vehicles, these must also meet the Phase 2 evaporative emission standards.

Alternative fueled vehicles and engines can also play a significant role in this incentive program. Any alternative fueled diesel-cycle engine certified to today's final standards prior to the 2007 model year can generate a 1.5 diesel-cycle engine count credit during the diesel phase-in years. Likewise, any alternative fueled Otto-cycle engine certified to today's final standards prior to the 2008 model year can generate one Otto-cycle engine count credit. Many commenters suggested that EPA should do more than was put forward in our proposal to encourage the introduction of alternative fuel technologies. To the extent that alternative fueled vehicles and engines are cleaner than diesels and gasolines, they may have an advantage within today's program. We believe that this program and its structure provides significant incentives for manufacturers to introduce alternative fueled vehicles and engines.

One final aspect of the incentive program is its interaction with our Tier 2 program. The Tier 2 final rule allows some MDPVs to be equipped with engine-certified diesel engines through the 2007 model year. Any such engines are required to comply with the diesel engine standards that apply during the given model year. Given that they are certified as heavy-duty diesel engines, any such engines that meet today's final diesel standards prior to the 2007 model year would be allowed within today's incentive program provided they in no way generate any emission or engine count credits within the Tier 2 program. Further, any MDPVs, whether gasoline or diesel, certified on a chassis dynamometer and being counted in any way as part of the Tier 2 program, cannot be used as part of today's incentive program because they are not considered heavy-duty vehicles.

E. Feasibility of the New Engine and Vehicle Standards

For more detail on the information and analyses supporting our assessment of the technological feasibility of today's standards, please refer to the Final RIA in the docket for this rule. The following discussion summarizes the more detailed discussion found in the Final RIA and in the Summary and Analysis of Comments document.

1. Feasibility of Stringent Standards for Heavy-Duty Diesel

The designers and manufacturers of diesel engines have made substantial progress over the last 20 years reducing NO_X emissions by 60 percent and PM emissions by almost 90 percent through better engine design. We believe that, in response to our Phase 1 heavy-duty rule, industry will have implemented all promising engine-based emission reduction technologies in order to meet the 2.5 g/bhp-hr NO_X+NMHC standard and the 0.1 g/bhp-hr PM standard. To get the substantial PM and NO_X reductions from diesel engines needed to solve the air quality problems identified in section II, we believe a new technology solution will be required. That solution is the application of high efficiency exhaust emission control technologies (catalysts) to diesel engines, analogous to the application of catalyst technologies to passenger cars in the 1970s. These high efficiency catalyst technologies, enabled by the use of diesel fuel with sulfur content at or below 15 ppm, can reduce NO_X and PM emissions by more than 90 percent. This dramatic reduction in emissions will

[101] The California SULEV levels are, for 8,500 to 10,000 pound vehicles, 0.1 g/mi NO_X, 0.100 g/mi NMOG, 0.008 g/mi HCMO, and 0.06 g/mi PM; and for 10,000 to 14,000 pound vehicles, 0.2 g/mi NO_X, 0.117 g/mi NMOG, 0.010 g/mi HCHO, and 0.06 g/mi PM. With the exception of the PM standards, these emission levels are half or roughly half of this rule's final gasoline vehicle standards.

enable diesel powered vehicles to reach emission levels well below today's gasoline emission levels. As detailed in the sections below, these technologies are rapidly being developed and will be available for application to diesel powered vehicles by, or even before, the 2007 model year provided the low sulfur diesel fuel required today is widely available.

a. Meeting the PM Standard

Diesel PM consists of three primary constituents: Unburned carbon particles (soot), which make up the largest portion of the total PM; the soluble organic fraction (SOF), which consists of unburned hydrocarbons that have condensed into liquid droplets or have condensed onto unburned carbon particles; and sulfates, which result from oxidation of fuel and oil derived sulfur in the engine's exhaust. Several exhaust emission control devices have been developed to control harmful diesel PM constituents—the diesel oxidation catalyst (DOC), and the many forms of diesel particulate filters, sometimes called PM traps. DOCs have been shown to be durable in use, but they effectively control only the SOF portion of the total PM which, on a modern diesel engine constitutes only 10 to 30 percent of the total PM. Therefore, the DOC on its own would only offer a modest reduction in PM emissions, and would not be able to meet the PM standard set here.

Diesel particulate filters were first investigated some twenty years ago as a means to capture solid particles in diesel exhaust. A variety of approaches to this technology have been developed most of which provide excellent mechanical filtration of the solid particles that make up the bulk of diesel PM (60 to 80 percent). The collected PM, mostly carbon particles, must then be ''burned off'' of the filter before the filter becomes plugged. This burning off of collected PM (oxidation of the stored PM, releasing CO_2) is referred to as ''regeneration,'' and can occur either:

- On a periodic basis by using base metal catalysts (including fuel-borne base metal catalysts) or an active regeneration system such as an electrical heater, a fuel burner, or a microwave heater; or,
- On a continuous basis by using precious metal catalysts.

Diesel particulate traps that regenerate on a periodic basis (referred to here as either uncatalyzed or base metal catalytic PM traps) demonstrated high PM trapping efficiencies many years ago, but the level of the applicable PM standard was such that it could be met through less costly ''in-cylinder'' control techniques. Un-catalyzed diesel particulate filters will not be able to meet the 0.01 g/bhp-hr PM standard finalized today as they are only moderately effective at controlling the SOF fraction of the particulate. In addition, they require active regeneration technology which must be engaged frequently making the systems expensive to operate (increasing fuel consumption) and less reliable.

We believe the kind of PM trap that would be able to meet the PM standard in a reliable, durable, cost effective manner, and the type of trap that will prove to the be the industry's technology of choice, is one capable of regenerating on an essentially continuous basis. In addition these PM traps will be able to achieve very low PM emissions because:

- They are highly efficient at controlling the solid carbon portion of PM;
- Unlike uncatalyzed filters, they are highly efficient at oxidizing the SOF of diesel PM;
- They employ precious metals to produce conditions that reduce the temperature at which regeneration occurs, thereby allowing for passive regeneration under normal operating conditions typical of a diesel engine; [102]
- Because they regenerate continuously, they have lower average backpressure thereby reducing potential fuel economy impacts; and,
- Because of their passive regeneration characteristics, they need no extra burners or heaters like what would be required by an active regeneration system, thereby reducing potential failures and fuel economy impacts.

These catalyzed PM traps are able to provide in excess of 90 percent control of diesel PM when operated on diesel fuel with sulfur levels at or below 15 ppm. However, as discussed in detail in the RIA, the catalyzed PM trap cannot regenerate properly with current fuel sulfur levels, as such sulfur levels poison the catalytic function of the PM trap inhibiting the necessary NO to NO_2 reaction to the point of stopping trap regeneration.[103] Also, because SO_2 is so readily oxidized to SO_3, the 0.01 g/bhp-hr PM standard cannot be achieved with fuel sulfur levels above 15 ppm because of the resultant increase in sulfate PM emissions (''sulfate make'').[104]

More than one exhaust emission control manufacturer is known to have or be developing these precious metal catalyzed, passively regenerating PM traps and to have them in broad field test programs in areas where low sulfur diesel fuel is currently available. In field trials since 1994, they have demonstrated highly efficient PM control and good durability with some units accumulating in excess of 360,000 miles of field use.[105] The experience gained in these field tests also helps to clarify the need for low sulfur diesel fuel. In Sweden, where below 10 ppm diesel fuel sulfur is readily available, more than 3,000 catalyzed diesel particulate filters have been introduced into retrofit applications without a single failure. These retrofit applications include intercity trains, airport buses, mail trucks, city buses and garbage trucks.[106] The field experience in areas where sulfur is capped at 50 ppm has been less definitive. In regions without extended periods of cold ambient conditions, such as the United Kingdom, field tests on 50 ppm sulfur cap fuel have been positive, matching the durability at 10 ppm, but would be unable to meet a 0.01 g/bhp-hr PM standard due to a substantial increase in sulfate PM. However, field tests on 50 ppm sulfur fuel in Finland where colder winter conditions are often encountered (similar to northern parts of the United States) have experienced a failure rate of 10 percent, due to trap plugging. This 10 percent failure rate has been attributed to insufficient trap regeneration due to fuel sulfur in combination with low ambient temperatures.[107] Other possible reasons for the high failure rate in Finland when contrasted with the Swedish experience appear to be unlikely. The Finnish and Swedish fleets were substantially similar, with both fleets consisting of transit buses powered by Volvo and Scania engines in the 10 to 11 liter range. Further, the buses were operated in city areas and none of the vehicles were operated in northern extremes such as north of the

[102] For PM trap regeneration without precious metals, exhaust metals, exhaust temperatures in excess of 650°C must be obtained. At such high temperatures, carbon will burn (oxidize to CO_2) provided sufficient oxygen is present. Although the largest heavy-duty diesels may achieve exhaust temperatures of 650°C under some operating conditions, smaller diesel engines, particularly light-duty and light heavy-duty diesel engines, will rarely achieve such high temperatures. For example, exhaust temperatures on the HDE Federal Test Procedure cycle typically range from 100°C to 450°C. Precious metal catalyzed traps use platinum to oxidize NO in the exhaust to No_2, which is capable of oxidizing carbon at temperatures as low as 250°C to 300°C.

[103] Cooper and Thoss, Johnson Matthey, SAE 890404.

[104] See the RIA for more detail on the relationship of fuel sulfur to sulfate make.

[105] Allansson, *et al.* SAE 2000–01–0480.

[106] Allansson, *et al.* SAE 2000–01–0480.

[107] Letter from Dr. Barry Cooper to Don Kopinski, US EPA, Air Docket A–99–06.

Arctic Circle.[108] Given that the fleets in Sweden and Finland were substantially similar, and given that ambient conditions in Sweden are expected to be similar to those in Finland, we believe that the increased failure rates noted here are due to the higher fuel sulfur level in a 50 ppm cap fuel versus a 10 ppm cap fuel.[109] Testing on an even higher fuel sulfur level of 200 ppm was conducted in Denmark on a fleet of 9 vehicles. In less than six months all of the vehicles in the Danish fleet had failed due to trap plugging.[110] We believe that this real world testing clearly indicates that increasing diesel fuel sulfur levels limit trap regeneration, leading to plugging of the PM trap even at fuel sulfur levels as low as 50 ppm.

From these results, we can further conclude that lighter applications (such as large pick-up trucks and other light heavy-duty applications), having lower exhaust temperatures than heavier applications, may experience similar failure rates even in more temperate climates and would, therefore, need lower sulfur fuel even in the United Kingdom. These results are understood to be due to the effect of sulfur on the trap's ability to create sufficient NO_2 to carry out proper trap regeneration. Without the NO_2, the trap continues to trap the PM at high efficiency, but it is unable to oxidize, or regenerate, the trapped PM. The possible result is a plugged trap. This vulnerability of the catalyzed diesel particulate filter due to sulfur in the fuel and the consequences of trap plugging are discussed fully in section III.F and the RIA.

Several commenters raised concerns with our use of the extensive fleet experience in Europe, to draw conclusions about the necessary sulfur reductions required in order to ensure PM trap durability. Their concerns focused generally around the fact that these fleets were made up of retrofit applications, and that the nature of the fleet operation did not represent a controlled experiment (ideally all things would have been equal except for the fuel sulfur level). While we acknowledge these limitations in the data, we believe they still provide reasonable evidence of the need for low sulfur diesel fuel. The diversity of applications, climates, fuel properties, NO_X emission levels, and sulfur levels help to show the relative robustness of the technology. Further, we believe the PM trap manufacturer's analysis of the failure mode (*i.e.,* that cold ambient conditions coupled with diminished NO to NO_2 conversion due to sulfur led to the failures that were experienced) is the most likely explanation of the observed phenomena. Sulfur in diesel fuel is known to inhibit the oxidation of NO to NO_2 (as described in section III.F) leading to reduced ability to regenerate the PM filter, especially under low ambient conditions. For our detailed response to comments surrounding catalyzed diesel particulate filter durability refer to the RTC document.

Several progressive refineries have begun to produce diesel fuel with sulfur content less than 15 ppm for limited markets in the United States. The availability of this low sulfur diesel fuel makes it possible to introduce diesel particulate filters into these limited markets today. International Truck and Engine Corporation (''International'') has announced its intent to commercialize its Green Diesel Engine Technology™ in 2001 coupled with less than 15 ppm sulfur fuel to achieve our proposed MY 2007 NMHC and PM emissions standards six years in advance of the requirement. International's ability to bring a catalyzed diesel particulate filter technology to commercialization in such a short period highlights the advanced state of this technology.[111]

Modern catalyzed PM traps have been shown to be very effective at reducing PM mass. In addition, recent data show that they are also very effective at reducing the overall number of emitted particles when operated on low sulfur fuel. Hawker, *et. al.,* found that a modern catalyzed PM trap reduced particle count by over 95 percent, including some of the smallest measurable particles (<50 nm), at most of the tested conditions. The lowest observed efficiency in reducing particle number was 86 percent. No generation of particles by the PM trap was observed under any tested conditions.[112] Kittelson, *et al.,* confirmed that ultrafine particles can be reduced by a factor of ten by oxidizing volatile organics, and by an additional factor of ten by reducing sulfur in the fuel. Catalyzed PM traps efficiently oxidize nearly all of the volatile organic PM precursors, and elimination of as much fuel sulfur as possible will substantially reduce the number of ultrafine PM emitted from diesel engines. The combination of catalyzed PM traps with low sulfur fuel is expected to result in very large reductions in both PM mass and the number of ultrafine particles.

The data currently available show that catalyzed particulate filters can provide significant reductions in PM. Catalyzed particulate filters, in conjunction with low sulfur fuel, have been shown to be more than 90 percent efficient over the FTP and at most SET modes.[113] Testing completed as part of the Diesel Emission Control Sulfur Effects (DECSE) program has demonstrated that a heavy duty diesel engine can achieve less than 0.01 g/bhp-hr PM emissions over the supplemental emission test when equipped with a catalyzed diesel particulate filter and operated on diesel fuel with sulfur content less than 15 ppm.[114] Further testing at NVFEL has demonstrated that FTP PM emissions can likewise be controlled below 0.01 g/bhp-hr provided less than 15 ppm sulfur diesel fuel is used with a catalyzed PM trap.[115] Based upon these test results, extensive field experience throughout the world and International Truck and Engine Corporation's commitment to produce vehicles with this technology in 2001, we conclude that the 0.01 g/bhp-hr FTP PM standard is feasible and that it represents the lowest emission level possible having given consideration to cost, energy and safety factors.

With regard to the NTE PM requirements, there is the potential for sulfate production during some operating modes covered by the NTE which would likely exceed the FTP PM standard. However, the NTE PM standard is equal to 1.5 × FTP standard. Even though the FTP standard of 0.01 g/bhp-hr PM is very low, the small additional head room provided by a

[108] Telephone conversation between Dr. Barry Cooper, Johnson Matthey, and Todd Sherwood, EPA, Air Docket A–99–06.

[109] The average temperatrue in Helsinki, Finland, for the month of January is 21°F. The average temperature in Stockholm, Sweden, for the month of January is 26°F. The average temperature at the University of Michigan in Ann Arbor, Michigan, for the month of January is 24°F. The temperature reported here are from *www.worldclimate.com* based upon the Global Historical Climatology Network (GHCN) produced jointly by the National Climatic Data Center and Carbon Dioxide Information Analysis Center at Oak Ridge National Laboratory (ORNL).

[110] Letter from Dr. Barry Cooper to Don Kopinski US EPA, Air Docket A–99–06.

[111] International Truck and Engine Corporation's comments on the proposed 2007 heavy duty vehicle standards, Air Docket A–99–06, page 2.

[112] Hawker, P., *et al.,* Effect of a Continuously Regenerating Diesel Particulate Filter on Non-Regulated Emissions and Particle Size Distribution, SAE 980189.

[113] Demonstration of Advanced Emission Control Technologies Enabling Diesel-Powered Heavy-Duty Engines to Achieve Low Emission Levels, Manufacturers of Emissions Controls Association, June 1999.

[114] Testing for the DECSE program was conducted on 3 ppm and 30 ppm diesel fuel. A straight-line fit to the results between 3 ppm and 30 ppm shows that a 15 ppm cap fuel would have emissions less than 0.01 g/bhp-hr. Diesel Emission Control Sulfur Effects (DECSE) Program, Phase I Interim Data Report No. 4: Diesel Particulate Filters—Final Report, January 2000.

[115] Memorandum from Charles Schenk, EPA, to Air Docket A–99–06, ''Summary of EPA PM Efficiency Data,'' May 8, 2000.

NTE multiplier of 1.5 will be sufficient to enable PM trap equipped HDDEs to meet the NTE provisions, even when operated on 15 ppm sulfur fuel. This is supported by data generated as part of the DECSE test program, as well as data generated at our own laboratory, as discussed in greater detail in the RIA.[116] As discussed in the RIA, the expanded ambient condition requirements of the NTE test procedure will have little effect on the PM reduction capabilities of a PM trap. The SET PM requirements have also been demonstrated in our laboratory and are supported by the DECSE test program. A detailed discussion is contained in the RIA. Based on this information and assessment, we conclude that the PM supplemental requirements will be feasible in the 2007 time frame.

b. Meeting the NO_X Standard

NO_X emissions from gasoline-powered vehicles are controlled to extremely low levels through the use of the three-way catalyst technology first introduced in the 1970s. Today, an advancement upon this well-developed three-way catalyst technology, the NO_X adsorber, has shown that it too can make possible extremely low NO_X emissions from lean-burn engines such as diesel engines. The potential of the NO_X adsorber catalyst is limited only by its need for careful integration with the total vehicle system (as was done for three-way catalyst equipped passenger cars in the 1980s and 1990s) and by poisoning of the catalyst from sulfur in the fuel. Just as the Tier 2 rulemaking enables advanced three-way catalyst equipped vehicles to meet ultra low NO_X emission levels through the use of low sulfur gasoline, today's rulemaking will enable NO_X adsorbers through substantial reductions in diesel fuel sulfur levels. The NO_X adsorber has already been commercially introduced in a number of stationary and mobile source applications.

NO_X Adsorbers in Power Generation

NO_X adsorber catalysts were first introduced in the power generation market less than five years ago. Since then, NO_X adsorber systems in stationary source applications have enjoyed considerable success. In 1997, the South Coast Air Quality Management District of California determined that a NO_X adsorber system provided the ''Best Available Control Technology'' NO_X limit for gas turbine power systems.[117] Average NO_X control for these power generation facilities is in excess of 92 percent.[118] A NO_X adsorber catalyst applied to a natural gas fired powerplant has demonstrated better than 99 percent reliability for more than 21,000 hours of operation while controlling NO_X by more than 90 percent.[119]

NO_X Adsorbers in Lean-Burn Gasoline Vehicles

The NO_X adsorber's ability to control NO_X under oxygen rich (fuel lean) operating conditions has led the industry to begin applying NO_X adsorber technology to lean-burn engines in mobile source applications. NO_X adsorber catalysts have been developed and are now in production for lean-burn gasoline vehicles in Japan, including several vehicle models sold by Toyota Motor Corporation.[120] The 2000 model year saw the first U.S. application of this technology with the introduction of the Honda Insight, certified to the California LEV–I ULEV category standard. These lean burn gasoline applications are of particular interest because they are similar to diesel vehicle applications in terms of NO_X storage under lean exhaust conditions and the need for periodic NO_X regeneration under transient driving conditions. The substantial experience already gained and continuing to be gained from NO_X adsorber use in lean-burn gasoline vehicles provides a firm basis from which diesel NO_X adsorber development is proceeding.

NO_X Adsorbers in Light-Duty Diesel Vehicles

This rapid development pace of the NO_X adsorber technology is not limited to gasoline applications but includes markets where low sulfur diesel fuel is already available or has been mandated to coincide with future emission standards. In Japan, Toyota Motor Corporation has recently announced that it will begin introducing vehicles using its Diesel Particulate— NO_X Reduction (DPNR) system in 2003. This system uses a NO_X adsorber catalyst applied on the surface of a diesel particulate filter, providing greater than 80 percent reductions in both PM and NO_X. Toyota notes however, that DPNR requires fuel with low sulfur content in order to maintain high efficiency for a long duration.[121] In Europe, both Daimler Chrysler and Volkswagen, driven by a need to meet stringent Euro IV emission standards, have published results showing how they would apply the NO_X adsorber technology to their diesel-powered passenger cars. Volkswagen reports that it has already demonstrated NO_X emissions of 0.137 g/km (0.22 g/mi), a 71 percent reduction, on a diesel powered Passat passenger car equipped with a NO_X adsorber catalyst.[122]

US DOE Research Programs

The U.S. Department of Energy (DOE) has funded several test programs at national laboratories and in partnership with industry to investigate NO_X adsorber technology. At Oak Ridge National Laboratory, DOE researchers have shown that a NO_X adsorber and a laboratory regeneration system can reduce NO_X by more than 90 percent when used on a diesel powered Mercedes A-class passenger car. Following 600 miles of driving with 150 ppm sulfur fuel, the system performance degraded considerably.[123] While the system was not production ready, it does demonstrate that very high efficiencies are achievable with advanced emission control systems operating on low sulfur fuel.[124] With additional system development over the next several years we are confident that the remaining design challenges such as long-term durability will be solved.

EPA NVFEL Current Technology Evaluation Program

As part of an effort to evaluate the rapidly developing state of this technology, the Manufacturers of Emission Control Association (MECA) provided four different NO_X adsorber catalyst formulations to EPA for

[116] Diesel Emission Control Sulfur Effects (DECSE) Program—Phase II Interim Data Report No. 4, Diesel Particulate Filters—Final Report, January 2000, Table C1, www.ott.doe.gov/decse.

[117] Letter from Barry Wallerstein, Acting Executive Officer, SCAQMD, to Robert Danziger, Goal Line Environmental Technologies, dated December 8, 1997, www.glet.com.

[118] Reyes and Cutshaw, $SCONO_X$ Catalytic Absorption System, December 8, 1998, www.glet.com.

[119] Danziger, R. *et al.* 21,000 Hour Performance Report on SCONOX, 15 September 2000, Air Docket A–99–06.

[120] Toyota requires that their lean burn gasoline engines equipped with NO_X adsorbers are fueled on premium gasoline in Japan, which has an average sulfur content of 6 ppm. (See Item IV–E–31 in Air Docket A–99–06.)

[121] Revolutionary Diesel Aftertreatment System Simultaneously Reduces Diesel Particulate Matter and Nitrogen Oxides, Toyota Motor Corporation press release, July 25, 2000, contained in Air Docket A–99–06.

[122] Pott, E., *et al.,* ''Potential of NO_X-Trap Catalyst Application for DI–Diesel Engines,'' Air Docket A–99–06.

[123] Diesel Vehicle Emission Control Sulfur Effects Project at Oak Ridge National Laboratory, Phase 1 Overview. Pete Devlin, DOE Office of Transportation Technologies, March 29, 2000, Air Docket A–99–06.

[124] Diesel Emission Control Sulfur Effects (DECSE) Program Phase II Summary Report: NO_X Adsorber Catalysts, October 2000, Air Docket A–99–06.

evaluation. Testing of these catalysts at NVFEL revealed that all four formulations were capable of reducing NO_X emissions by more than 90 percent over the broad range of operation in the supplemental emission test (SET) procedure as summarized in Figure III–1. At operating conditions representative of ''road-load'' operation for a heavy duty on-highway truck, the catalysts showed NO_X reductions as high as 99 percent resulting in NO_X emissions well below 0.1 g/bhp-hr from an engine-out level of nearly 5 g/bhp-hr.[125] Testing on the FTP has shown similarly good results, with hot start FTP NO_X emissions reduced by more than 90 percent. These results demonstrate that significant NO_X reductions are possible over a broad range of operating conditions with current NO_X adsorber technology, as typified by the FTP and the SET.

[125] For more information on testing conducted at NVFEL, refer to the in-depth discussion given in the RIA, and to the initial test report contained in Air Docket A–99–06, Item IV–A–29.

BILLING CODE 6560–50–P

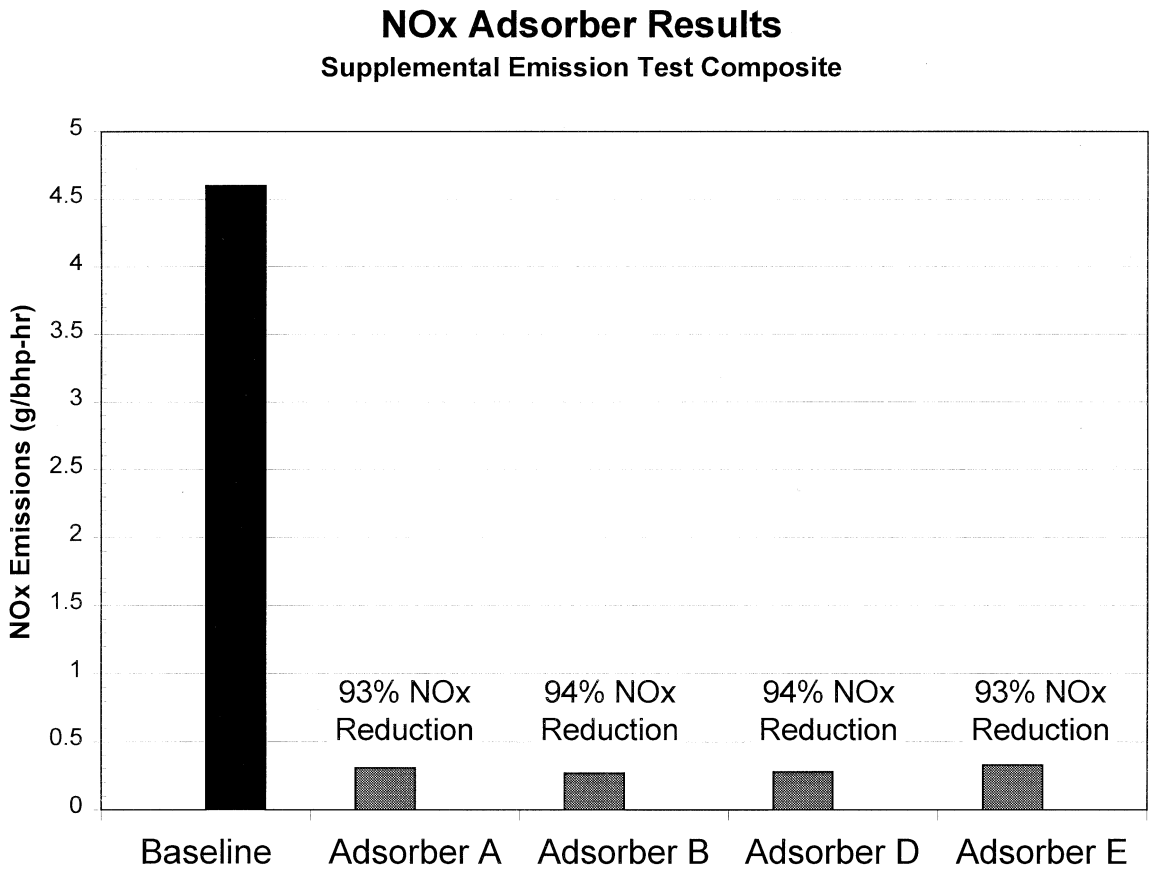

Figure III-1. NVFEL NOx Adsorber SET Composite Results

BILLING CODE 6560–50–C

This large body of evidence that NO_X adsorbers are highly effective, that they can be applied to diesel engines (as further described in the RIA), and that there is a clear and strong prospect for their further development, causes us to conclude that NO_X adsorbers will provide at least one feasible path to the NO_X standards we have set today. Further, we can conclude from this development experience that the 0.20 g/bhp-hr NO_X standard represents the lowest standard achievable by the year 2007, having given appropriate consideration to cost, energy, and safety as described elsewhere in sections III and V of this document and in the RIA.

Remaining Engineering Development

The considerable success in demonstrating NO_X adsorber technology in laboratory settings, as outlined above, clearly shows that the technology is currently capable of achieving the NO_X standard level. There are several engineering challenges that will be addressed in going from this level of demonstration to implementation of durable and effective emission control systems on production vehicles. One of these technical challenges involves changes to the way diesel engines will need to operate in order to take full advantage of the NO_X adsorber, representing a shift from current day engine operation. Working within the engine design and operating principles expected for 2004 model year engines, optimization of the total system (matching exhaust temperatures to the operating window of NO_X adsorbers and controlling exhaust air to fuel ratios), will be essential to getting the best performance from the NO_X adsorber. We have estimated in the RIA that diesel engine manufacturers collectively will need to invest $385 million in order to implement this change. In addition to the generic need to optimize operation to match the NO_X adsorber performance, industry will further need to address NO_X adsorber desulfation and its associated issues because some sulfur will still remain in the fuel and the engine's lubricating oil.

Clear engineering paths to address these problems can be described today, several years in advance of when they will need to be applied. The primary thing that must occur is to eliminate most of the sulfur from diesel fuel. The fuel sulfur standard set today in this rulemaking overcomes this obstacle. The second set of system engineering steps needed to accomplish both NO_X regeneration and desulfation are already being laid out in test programs conducted by DOE in the DECSE Phase II program and in our own test program at the National Vehicle and Fuel Emissions Laboratory. The DECSE Phase II program clearly demonstrates that, through changes in ''in-cylinder'' operation, diesel exhaust conditions can be generated that are optimized for NO_X storage (fuel lean operation), NO_X regeneration (fuel rich operation), or desulfation (hot, fuel rich operation). This in-cylinder approach, discussed more fully in the RIA, represents a likely technical solution for light heavy-duty vehicles which are expected to already have the necessary EGR and common rail fuel system technologies need for this approach by the 2004 model year. Testing at NVFEL shows yet another engineering path to optimizing the NO_X control system external to the combustion system. This approach segregates the exhaust into separate streams external to the engine and manipulates exhaust conditions by changing exhaust mass flow (through valves) and by adding supplemental fuel with an electronic fuel injector. This approach means that exhaust temperatures and air to fuel ratios can be controlled external to the engine allowing great flexibility to control and optimize NO_X regeneration and sulfur regeneration events. This approach may prove to be a good solution for heavy heavy-duty vehicles because of the freedom it allows for optimization of both the engine operation and the aftertreatment operation with fewer tradeoffs with regards to fuel consumption and engine durability. A complete description of this approach and its merits is given in the RIA.

Each of the engineering paths described here shows a means for compliance with the NO_X standard given further optimization and development and, given past experiences with the introduction of new technologies, other approaches are likely to be devised as well. Given industry's demonstrated ability to develop solutions to similar issues with gasoline three-way catalysts and gasoline-based NO_X adsorber technologies, we are confident that the NO_X emission control system can be designed for the long life required for heavy-duty diesel operation. We are not alone in this evaluation of NO_X adsorber development, as evidenced by the strong endorsement of the technology by many in the industry.[126] For example, one letter we have received stated, ''We believe all NO_X Adsorber development issues have been identified and the technology is proceeding according to schedule. We have identified development paths leading toward production optimization and do not see insurmountable technical barriers. We are confident in our ability and experience in applying the science of surface chemistry and catalysis to achieve our objective.'' [127]

NTE NO_X Limits

The broad NO_X reduction capability of the NO_X adsorbers will also enable the NTE NO_X requirements to be met. As discussed previously, we have established an NTE NO_X standard of 1.5 × FTP standard, or 0.30 g/bhp-hr NO_X, which is 0.10 g/bhp-hr above the FTP standard. The NMHC+NO_X NTE standard for 2004 technology HDDEs is 1.25 × 2.5 g/bhp-hr NMHC + NO_X, or 3.125 g/bhp-hr, which is 0.625 g/bhp-hr above the 2004 FTP standard. As discussed in the RIA for this final rule, we would expect that the majority of the NTE standard for a 2004 technology engine would be comprised of NO_X emissions, perhaps as much as 3.0 g/bhp-hr (with the remainder, 0.125 g/bhp-hr, being HC). Based on available data, including data from our NVFEL test facility, we believe a NO_X adsorber system will be capable of a 90 percent or greater emission reduction across the entire NTE control zone, for the test conditions covered by the NTE test procedure, by model year 2007. A 90 percent reduction from the ''base'' NO_X NTE level of 3.0 g/bhp-hr would result in a tailpipe emission rate of 0.30 g/bhp-hr, which is 1.5 times the 2007 FTP NO_X standard. As discussed in the RIA, we have demonstrated NO_X reductions on the order of 90 percent or greater across the NTE control zone in our test program at NVFEL. A complete description of the NO_X adsorber testing completed at NVFEL is provided in the final RIA and in the docket associated with this rule. This testing was performed at standard laboratory conditions; however, we do not expect the expanded ambient conditions required for NTE compliance to have a significant impact on the performance of the exhaust emission control systems. Additional discussion of this issue is contained in the RTC and the RIA for this rule.

[126] Letter from Steven Suttle, Corning, Inc., to Margo Oge, EPA, dated October 23, 2000, Item IV–G–59; letter from Martin Lassen, Johnson Matthey, to Margo Oge, EPA, dated October 19, 2000, Item IV–G–55; letter from John Mooney, Engelhard Corporation, to Margo Oge, EPA, dated October 3, 2000, Item IV–G–38; MECA press release dated October 3, 2000, Item IV–G–53; and Department of Energy, dated September 6, 2000, Item IV–G–28; all contained in Docket A–99–06.

[127] Letter from John J. Mooney, Director, Technical Development and Business Groups, Engelhard Corporation, to Margo Oge, Director, OTAQ, EPA, dated October 3, 2000, Item IV–G–38, Docket A–99–06.

Sulfur Trap

The preceding discussion of NO_X adsorbers assumes that SO_X (SO_2 and SO_3) emissions will be ''trapped'' on the surface of the catalyst, effectively poisoning the device and requiring a ''desulfation'' (sulfur removal event) to recover catalyst efficiency. We believe that, at the 15 ppm cap fuel sulfur level, this strategy will allow effective NO_X control with moderately frequent desulfation and with a modest fuel consumption of one percent. We believe this fuel consumption impact will be more than offset by reduced reliance on current, more fuel inefficient NO_X control strategies (see discussion in Section III.G for estimates of overall fuel economy impacts). In the NPRM for this rulemaking, we sought comment on the potential of a separate SO_X trap catalyst to control sulfur poisoning of the NO_X adsorber catalyst. As detailed further in the final RIA and RTC documents, we believe that even if a separate SO_X trap system were used, fuel sulfur levels would have to be 15 ppm or lower in order for the NO_X adsorber technology to function properly over the life of a heavy-duty vehicle.

Urea SCR Technology

SCR Technology has been put forward by some as another means of meeting stringent NO_X standards. For reasons discussed below we do not believe that it provides an adequate basis for establishing the feasibility of today's emission standards. Selective Catalytic Reduction (SCR), like the NO_X adsorber technology, was first developed for stationary applications and is currently being refined for the transient operation found in mobile applications. With the SCR system, a urea solution is injected upstream of the catalyst which breaks down the urea into ammonia and carbon dioxide. The ammonia is used as a NO_X reductant across the SCR catalyst producing N_2 and water. Catalysts containing precious metals (platinum) can be used at the inlet and outlet of SCR systems designed for mobile applications to improve low temperature NO_X reduction performance and to oxidize any ammonia that may pass through the SCR, respectively. SCR systems using these oxidation catalysts and being developed for mobile applications are more often called ''compact SCR'' systems. Generally, reference to SCR throughout this preamble should be taken to mean compact SCR. The use of these platinum catalysts enables SCR systems to achieve NO_X reductions at lower temperatures (as required for diesel engine applications), but introduces sensitivity to sulfur in much the same way as for diesel particulate filter technologies. Sulfur in diesel fuel inhibits low temperature performance and results in high sulfate-make, leading directly to higher particulate emissions. For a further discussion of SCR system sensitivity to sulfur in diesel fuel, and of its need for low sulfur diesel fuel, refer to Section III.F.

Urea SCR catalysts, like NO_X adsorbers, need low sulfur diesel fuel to achieve high NO_X conversion efficiencies and to control sulfate PM emissions. If low sulfur fuel is required, SCR NO_X control may be possible in some applications by 2007. However we believe there are significant barriers to its general use for meeting the 2007 standards. SCR systems require vehicles to carry a supply of urea. The infrastructure for delivering urea at the diesel fuel pump would need to be in place for these devices to be feasible in the marketplace; and before development of the infrastructure could begin, the industry would have to decide upon a standardized method of delivery for the urea supply.

In addition to this, there would need to be adequate safeguards in place to ensure the urea is used throughout the life of the vehicle since, given the added cost of urea and the fact that urea depletion would not normally affect driveability, there would be an incentive not to refill the urea tank. This could lead to considerable uncertainties regarding the effectiveness of SCR, even if EPA were to promulgate the regulations that likely would be needed to require the regular replenishment of urea. Some commenters have suggested that this is the key issue with regard to urea SCR systems. One commenter further concludes that this issue could be addressed by designing engines with on-board diagnostic systems utilizing a NO_X sensor that would observe a loss of NO_X control. When observed, the engine would be designed to reduce power gradually until a 50 percent loss of power was realized. This power loss would serve to encourage the user to replenish the urea tank.[128] While such an approach may be possible, it raises concerns for public safety as poor engine performance could lead to inadequate power for safe merging onto highways and other related driving situations. We remain hesitant to base a national program on such technology when important issues such as driver training on the need to refill the urea tank and the consequences of failure to do so cannot be appropriately controlled. This approach would seem to suggest a need for EPA-mandated spot checks of individual vehicles to ensure compliance with the NO_X standard. How such a program would work and the burden that it might place on small business entities was not addressed in the comments. In testimony given at the public hearing held for this rulemaking in Los Angeles, the California Trucking Association raised concerns about the appropriateness of putting this regulatory burden on truckers when a simpler technology such as a diesel NO_X adsorber was available instead.[129] Without measures similar to these, we would expect that a substantial number of users would not remember to fill their urea tanks. Since failure to provide urea for a vehicle would lead to a total loss of NO_X control for that vehicle, we would need to model the loss of NO_X control to be expected from an SCR based program. Such a loss in NO_X control most likely would be appreciable and, in effect, the NO_X standard would not be met on a fleetwide basis.

We believe that these significant obstacles would prevent the widespread or general availability of SCR for use as a NO_X control strategy to meet the 0.20 g/bhp-hr NO_X standard. These problems may, however, be resolved in some niche applications; for example, certain well-managed centrally-fueled fleets. Because of the many obstacles to ensure in-use NO_X control with the SCR, we do not believe that feasibility of the 0.20 g/bhp-hr NO_X standard can be based upon SCR technology. For further discussion of urea SCR's need for low sulfur diesel fuel, refer to section III.F of this preamble.

Summary

Based on the discussion above, we believe that NO_X exhaust emission control technology, in combination with low sulfur diesel fuel of 15 ppm or lower, is capable of meeting the very stringent NO_X standards finalized today. The certainty provided by this rulemaking that low sulfur diesel fuel will be available in the future, and the emission standards finalized today that necessitate advanced NO_X controls, should lead to rapid development of these technologies. The NO_X adsorber technology has shown remarkable advancement in the last five years, both in stationary source applications and

[128] API Comments on the 2007 Heavy Duty Engine/Diesel Sulfur Proposed Rule, August 14, 2000, Air Docket A–99–06, IV–D–343.

[129] Testimony of Stephanie Williams—Director of Environmental Affairs, California Trucking Association to EPA public hearing June 27, 2000, Air Docket A–99–06, IV–F–190.

lean-burn gasoline applications, and now for heavy-duty diesel engines. Given this rapid progress, the availability of low sulfur diesel fuel, the identification of engineering paths to resolving the technological issues, and the lead time provided by today's rulemaking, we believe that applying NO_X adsorbers to heavy-duty diesel engines will provide the emission reductions needed to comply with the 2007 HD NO_X standards. This can be done in a cost effective way, with little or no fuel economy impact, and no special concerns of safety.

c. Meeting the NMHC Standard

Historically control of non-methane hydrocarbon (NMHC) emissions on diesel engines has been relatively simple, when compared to gasoline engines, due to the net fuel lean (abundant oxygen) operation typical of diesel engines. In fact, due to this operating characteristic, diesel engine NMHC levels have often been significantly below the mandated levels. The introduction of catalytic NO_X control and the subsequent need to operate under alternately net lean and net rich conditions is likely to make NMHC control more difficult.

Meeting the NMHC standards under the lean operating conditions typical of the biggest portion of NO_X adsorber operation should not present any special challenges to diesel manufacturers. Since the devices discussed above—catalyzed particulate filters and NO_X adsorbers, contain platinum and other precious metals to oxidize NO to NO_2, they are also very efficient oxidizers of hydrocarbons. NMHC emission reductions of greater than 95 percent have been shown in these devices over the transient FTP and SET modes.[130] Given that typical engine-out NMHC is expected to be in the 0.20 g/bhp-hr range for engines meeting the 2004 standards, this level of NMHC reduction will mean that under lean conditions emission levels will be well below the standard.

However, the NO_X regeneration strategies for the NO_X adsorber technology may prove difficult to control precisely, leading to a possible increase in HC emissions under the rich operating conditions required for NO_X regeneration. Even with precise control of the regeneration cycle, HC slip may prove to be a difficult problem due to the need to regenerate the NO_X adsorber under net rich conditions (excess fuel) rather than the stoichiometric (fuel and air precisely balanced) operating conditions typical of a gasoline three-way catalyst. It seems likely therefore, that in order to meet the HC standards we have set, an additional clean up catalyst may be necessary. A diesel oxidation catalyst, like those applied historically for HC and partial PM control, can reduce HC reductions (including toxic HCs) by more than 80 percent.[131] This amount of additional control along with optimized NO_X regeneration strategies will ensure very low HC emissions. With such a downstream clean-up device to control HC slip during the periodic NO_X regeneration event, the HC standard we have set here can be met. For a complete description of how the clean up catalyst functions in conjunction with the NO_X adsorber technology, please refer to the complete system description given below in section III.E.1.e and to the final RIA.

Given industry's extensive experience with diesel oxidation catalysts, the long lead time provided by this rulemaking and the availability of less than 15 ppm sulfur diesel fuel, we conclude, having given consideration to cost, energy impacts and safety, that the NMHC standard is feasible.

d. Meeting the Crankcase Emissions Requirements

The most common way to eliminate crankcase emissions has been to vent the blow-by gases into the engine air intake system, so that the gases can be recombusted. Until today's rulemaking, we have required that crankcase emissions be controlled only on naturally aspirated diesel engines. We have made an exception for turbocharged heavy-duty diesel engines because of concerns in the past about fouling that could occur by routing the diesel particulates (including engine oil) into the turbocharger and aftercooler. However, this is an environmentally significant exception since most heavy-duty diesel trucks use turbocharged engines, and a single engine can emit over 100 pounds of NO_X, NMHC, and PM from the crankcase over its lifetime.

Given the available means to control crankcase emissions, we have eliminated this exception. We anticipate that the heavy-duty diesel engine manufacturers will be able to control crankcase emissions through the use of closed crankcase filtration systems or by routing unfiltered blow-by gases directly into the exhaust system upstream of the emission control equipment. However, the provision has been written such that if adequate control can be had without ''closing'' the crankcase then the crankcase can remain ''open.'' Compliance would be ensured by adding the emission from the crankcase ventilation system to the emissions from the engine control system downstream of any emission control equipment.

We expect that in order to meet the stringent tailpipe emission standards set here, that manufacturers will have to utilize closed crankcase approaches as described here. Closed crankcase filtration systems work by separating oil and particulate matter from the blow-by gases through single or dual stage filtration approaches, routing the blow-by gases into the engine's intake manifold and returning the filtered oil to the oil sump. These systems are required for new heavy-duty diesel vehicles in Europe starting in 2000. Oil separation efficiencies in excess of 90 percent have been demonstrated with production ready prototypes of two stage filtration systems.[132] By eliminating 90 percent of the oil that would normally be vented to the atmosphere, the system works to reduce oil consumption and to eliminate concerns over fouling of the intake system when the gases are routed through the turbocharger. Mercedes-Benz currently utilizes this type of system on virtually all of its heavy-duty diesel engines sold in Europe. An alternative approach would be to route the blow-by gases into the exhaust system upstream of the catalyzed diesel particulate filter which would be expected to effectively trap and oxidize the engine oil and diesel PM. This approach may require the use of low sulfur engine oil to ensure that oil carried in the blow-by gases does not compromise the performance of the sulfur-sensitive emission control equipment.

e. The Complete System

We expect that the technologies described above would be integrated into a complete emission control system as described in the final RIA. The engine-out emissions will be balanced with the exhaust emission control package in such a way that the result is the most beneficial from a cost, fuel economy and emissions standpoint. The engine-out exhaust characteristics will also have a role in assisting the exhaust emission control devices used. The NO_X

[130] ''The Impact of Sulfur in Diesel Fuel on Catalyst Emission Control Technology,'' report by the Manufacturers of Emission Controls Association, March 15, 1999, pp. 9 & 11.

[131] Demonstration of Advanced Emission Control Technologies Enabling Diesel-Powered Heavy-Duty Engines to Achieve Low Emission Levels, Manufacturers of Emissions Controls Association, June 1999.

[132] Letter from Marty Barris, Donaldson Corporation, to Byron Bunker US EPA, March 2000. Air Docket A–99–06.

adsorber, for instance, will require periods of oxygen-depleted exhaust flow in order to accomplish NO_X regeneration and to allow for sulfur control using desulfation events. This may be most efficiently done by reducing the air-fuel ratio that the engine is operating under during the regeneration to reduce the oxygen content of the exhaust, or alternatively by partitioning the exhaust flow such that only a small portion of the exhaust flow is used for NO_X regeneration, thereby reducing the amount of oxygen needing to be depleted through fuel addition. Further, it is envisioned that the PM device will be integrated into the exhaust system upstream of the NO_X reduction device. This placement would allow the PM trap to take advantage of the engine-out NO_X as an oxidant for the particulate, while removing the particulate so that the NO_X exhaust emission control device will not have to deal with large PM deposits which may cause a deterioration in performance. Further it allows the NO_X adsorber to make use of the upstream PM filter as a pre-catalyst to oxidize some NO to NO_2 and to partially oxidize the reductant (diesel fuel or exhaust hydrocarbons) to a more desirable reductant form such as CO before entering the NO_X adsorber. Of course, there is also the possibility of integrating the PM and NO_X exhaust emission control devices into a single unit to replace a muffler and save space (Toyota's DNPR system being an example of this approach).[133] The final component in any of these system configurations is likely to be some form of clean up catalyst which can provide control of HC slip during NO_X regeneration as well as H_2S slip during SOx regeneration. Particulate free exhaust may also allow for new options in EGR system design to optimize its efficiency.

We expect that the emission reduction efficiency of the exhaust emission control system will vary across the NTE zone as a function of exhaust temperature and space velocity.[134] Consequently, to maintain the NTE emission cap, the engine-out emissions would have to be calibrated with exhaust emission control system performance characteristics in mind. This would be accomplished by lowering engine-out emissions where the exhaust emission control system was less efficient, for example by retarding fuel injection timing or increasing the EGR rate. Conversely, where the exhaust emission control system is very efficient at reducing emissions, the engine-out emissions could be tuned for higher emissions and better fuel economy. These trade-offs between engine-out emissions and exhaust emission control system performance characteristics are similar to those of gasoline engines with three-way catalysts in today's light-duty vehicles and can be overcome through similar system based engineering solutions. Managing and optimizing these trade-offs will be crucial to effective implementation of exhaust emission control devices on diesel applications.

2. Feasibility of Stringent Standards for Heavy-Duty Gasoline

Gasoline emission control technology has evolved rapidly in recent years. Emission standards applicable to 1990 model year vehicles required roughly 90 percent reductions in exhaust NMHC and CO emissions and a 75 percent reduction in NO_X emissions compared to uncontrolled emissions. Today, some vehicles' emissions are well below those necessary to meet the current federal heavy-duty gasoline standards, the 2004 heavy-duty gasoline standards, and the California Low-Emission Vehicle standards for medium-duty vehicles. The continuing emissions reductions have been brought about by ongoing improvements in engine air-fuel management hardware and software plus improvements in exhaust system and catalyst designs.

We believe that the types of changes being seen on current vehicles have not yet reached their technological limits and continuing improvement will allow them to meet today's standards. The RIA describes a range of specific emission control techniques that we believe could be used. There is no need to invent new technologies, although there will be a need to apply existing technology more effectively and more broadly. The focus of the effort will be in the application and optimization of these existing technologies.

In our light-duty Tier 2 rule, we have required that gasoline sulfur levels be reduced to a 30 ppm average, with an 80 ppm maximum. This sulfur level reduction is the primary enabler for the Tier 2 standards. Similarly, we believe that the gasoline sulfur reduction, along with refinements in existing gasoline emission control technology, will be sufficient to allow heavy-duty gasoline vehicles and engines to meet the emission standards sought by today's rule.

However, we recognize that the emission standards are stringent, and considerable effort will have to be undertaken. For example, we expect that every engine will have to be recalibrated to improve upon its cold start emission performance. Manufacturers will have to migrate their light-duty calibration approaches to their heavy-duty offerings to provide cold start performance in line with what they will have to achieve to meet the Tier 2 standards.

We also project that today's new heavy-duty gasoline standards would require the application of advanced engine and catalyst systems similar to those projected for their light-duty counterparts. Historically, manufacturers have introduced technology on light-duty gasoline applications and then applied those technologies to their heavy-duty gasoline applications. Today's standards will allow manufacturers to take this same approach. In other words, we expect that manufacturers will meet today's new standards through the application of technology developed to meet light-duty Tier 2 standards for 2004.

Improved calibration and systems management will be critical in optimizing the performance of the engine with the advanced catalyst system. Precise air/fuel control must be tailored for emissions performance and must be optimized for all types of driving. Calibration refinements may also be needed for EGR system optimization and to reduce cold start emissions through methods such as spark timing retard. We also project that electronic control modules with expanded capabilities will be needed on some vehicles and engines.

We also expect increased use of other technologies in conjunction with those described above. We expect some increased use of air injection to improve upon cold start emissions. We may also see air-gap manifolds, exhaust pipes, and catalytic converter shells as a means of improving upon catalyst light-off times thereby reducing cold start emissions. Other, non-catalyst related improvements to gasoline emission control technology include higher speed computer processors which enable more sophisticated engine control algorithms and improved fuel injectors providing better fuel atomization thereby improving fuel combustion.

Catalyst system durability is, and will always be, a serious concern. Historically, catalysts have deteriorated when exposed to very high temperatures. This has long been a concern especially for heavy-duty work

[133] Revolutionary Diesel Aftertreatment System Simultaneously Reduces Diesel Particulate Matter and Nitrogen Oxides, Toyota Motor Corporation press release, July 25, 2000, Air Docket A–99–06.

[134] The term, ''space velocity,'' is a measure of the volume of exhaust gas that flows through a device.

vehicles. However, catalyst manufacturers continue to make strides in the area of thermal stability and we expect that improvements in thermal stability will continue for the next generation of catalysts.

We believe that, by optimizing all of these technologies, manufacturers will be able to achieve today's standards. Advanced catalyst systems have already shown potential to reduce emissions to close to these levels. Some current California vehicles are certified to levels below 0.20 g/mi NO_X. California tested an advanced catalyst system on a vehicle loaded to a test weight comparable to a heavy-duty vehicle test weight and achieved NO_X and NMOG levels of 0.1 g/mi and 0.16 g/mi, respectively. The California vehicle with the advanced catalyst had not been optimized as a system to take full advantage of the catalyst's capabilities.

The compliance flexibility provisions can also be an important tool for manufacturers in implementing a new standard. The program allows manufacturers to transition to the more stringent standards by introducing emissions controls over a longer period of time, as opposed to a single model year. Manufacturers plan their product introductions well in advance. With the compliance flexibilities, manufacturers can better manage their product lines so that the new standards don't interrupt their product introduction plans. Also, the program allows manufacturers to focus on higher sales volume vehicles first and use credits for low sales volume vehicles.

3. Feasibility of the New Evaporative Emission Standards

The new evaporative emission standards appear to be feasible now. Many designs have been certified that already meet these standards. A review of 1998 model year certification data indicates that five of eight evaporative system families in the 8,500 to 14,000 pound range comply with the new 1.4 g/test standard, while all evaporative system families in the over 14,000 pound range comply with the new 1.9 g/test standard.

The new evaporative emission standards should not require the development of new materials but may, in some cases, require new application of existing materials. Low permeability materials and low loss connections and seals are already used to varying degrees on current vehicles, but that practice may become more widespread. Today's new standards would likely ensure their consistent use and discourage manufacturers from switching to cheaper materials or designs to take advantage of the large safety margins they have had under current standards.

There are two approaches to reducing evaporative emissions for a given fuel. One is to minimize the potential for permeation and leakage by reducing the number of hoses, fittings and connections. The second is to use less permeable hoses and lower loss fittings and connections. Manufacturers are already employing both approaches.

Most manufacturers are moving to ''returnless'' fuel injection systems. Through more precise fuel pumping and metering, these systems eliminate the return line in the fuel injection system. The return line carries unneeded fuel from the fuel injectors back to the fuel tank. Because the fuel injectors are in such close contact with the hot engine, the fuel returned from the injectors to the fuel tank has been heated. This returned fuel is a significant source of fuel tank heat and vapor generation. The elimination of the return line also reduces the total length of hose on the vehicle though which vapors can permeate, and it reduces the number of fittings and connections through which fuel can leak.

Low permeability hoses and seals, and low loss fittings are available and are already used on many vehicles. Fluoropolymer materials can be added as liners to hose and component materials to yield large reductions in permeability over such conventional materials as monowall nylon. In addition, fluoropolymer materials can greatly reduce the adverse impact of alcohols in gasoline on permeability of evaporative components, hoses and seals.

F. Need for Low Sulfur Diesel Fuel

The following discussion will build upon the brief sulfur sensitivity points made earlier in this section by providing a more in-depth discussion of sulfur's effect on the diesel exhaust emission control technologies. In order to evaluate the effect of sulfur on diesel exhaust control technologies, we used three key factors to categorize the impact of sulfur in fuel on emission control function. These factors were efficiency, reliability, and fuel economy. Taken together these three factors lead us to believe that diesel fuel sulfur levels of 15 ppm will be required in order to make feasible the heavy-duty vehicle emission standards. Brief summaries of these factors are provided below. A more in-depth review is given in the following subsections and in the final RIA.

The efficiency of emission control technologies to reduce harmful pollutants is directly affected by sulfur in diesel fuel. Initial and long term conversion efficiencies for NO_X, NMHC, CO and diesel PM emissions are significantly reduced by catalyst poisoning and catalyst inhibition due to sulfur. NO_X conversion efficiencies with the NO_X adsorber technology in particular are dramatically reduced in a very short time due to sulfur poisoning of the NO_X storage bed. In addition, total PM control efficiency is negatively impacted by the formation of sulfate PM. As explained in detail in the following sections, all of the advanced NO_X and PM technologies described here have the potential to make significant amounts of sulfate PM under operating conditions typical of heavy-duty vehicles. We believe that the formation of sulfate PM will be in excess of the total PM standard, unless diesel fuel sulfur levels are at or below 15 ppm. Based on the strong negative impact of sulfur on emission control efficiencies for all of the technologies evaluated, we believe that 15 ppm represents an upper threshold of acceptable diesel fuel sulfur levels.

Reliability refers to the expectation that emission control technologies must continue to function as required under all operating conditions for the life of the vehicle. As discussed in the following sections, sulfur in diesel fuel can prevent proper operation of both NO_X and PM control technologies. This can lead to permanent loss in emission control effectiveness and even catastrophic failure of the systems. Sulfur in diesel fuel impacts reliability by decreasing catalyst efficiency (poisoning of the catalyst), increasing diesel particulate filter loading, and negatively impacting system regeneration functions. Among the most serious reliability concerns with sulfur levels greater than 15 ppm are those associated with failure to properly regenerate. In the case of the NO_X adsorber, failure to regenerate will lead to rapid loss of NO_X emission control as a result of sulfur poisoning of the NO_X adsorber bed. In the case of the diesel particulate filter, sulfur in the fuel reduces the reliability of the regeneration function. If regeneration does not occur, catastrophic failure of the filter could occur. It is only by the availability of low sulfur diesel fuels that these technologies become feasible. The analysis given in the following section makes clear that diesel fuel sulfur levels will need to be under 15 ppm in order to ensure robust operation of the technologies under the variety of operating conditions anticipated to be experienced in the field.

Fuel economy impacts due to sulfur in diesel fuel affect both NO_X and PM

control technologies. The NO_X adsorber sulfur regeneration cycle (desulfation cycle) can consume significant amounts of fuel unless fuel sulfur levels are very low. The larger the amount of sulfur in diesel fuel, the greater the adverse effect on fuel economy. As sulfur levels increase above 15 ppm, the adverse effect on fuel economy becomes more significant, increasing above one percent and doubling with each doubling of fuel sulfur level. Likewise, PM trap regeneration is inhibited by sulfur in diesel fuel. This leads to increased PM loading in the diesel particulate filter and increased work to pump exhaust across this restriction. With low sulfur diesel fuel, diesel particulate filter regeneration can be optimized to give a lower (on average) exhaust backpressure and thus better fuel economy. Thus, for both NO_X and PM technologies the lower the fuel sulfur level the lower the operating costs of the vehicle.

1. Catalyzed Diesel Particulate Filters and the Need for Low Sulfur Fuel

Diesel particulate filters (PM traps) function to control diesel PM through mechanical filtration of PM from the diesel exhaust stream and then oxidation of the stored PM (trap regeneration). Through oxidation in the catalyzed diesel particulate filter the stored carbonaceous PM is converted to CO_2 and released into the atmosphere. Failure to oxidize the stored PM leads to accumulation in the trap, eventually causing the trap to become so full that it severely restricts exhaust flow through the device, leading to trap or vehicle failure.

As discussed earlier in this section, uncatalyzed diesel particulate filters require exhaust temperatures in excess of 650° C in order for the collected PM to be oxidized by the oxygen available in diesel exhaust. That temperature threshold for oxidation of PM by exhaust oxygen can be decreased to 450° C through the use of base metal catalytic technologies. For a broad range of operating conditions typical of in use operation, diesel exhaust is significantly cooler than 400° C. If oxidation of the trapped PM could be assured to occur at exhaust temperatures lower than 300° C, then diesel particulate filters would be expected to be robust for most applications and operating regimes. Oxidation of PM (regeneration of the trap) at such low exhaust temperatures can occur by using oxidants which are more readily reduced than oxygen. One such oxidant is NO_2.

NO_2 can be produced in diesel exhaust through the oxidation of the nitrogen monoxide (NO), created in the engine combustion process, across a catalyst. The resulting NO_2-rich exhaust is highly oxidizing in nature and can oxidize trapped diesel PM at temperatures as cool as 250°C.[135] Some platinum group metals are known to be good catalysts to promote the oxidation of NO to NO_2. Therefore in order to ensure passive regeneration of the diesel particulate filters, significant amounts of platinum group metals (primarily platinum) are being used in the wash-coat formulations of advanced diesel particulate filters. The use of platinum to promote the oxidation of NO to NO_2 introduces several system vulnerabilities affecting both the durability and the effectiveness of the catalyzed diesel particulate filter when sulfur is present in diesel exhaust. The two primary mechanisms by which sulfur in diesel fuel limits the robustness and effectiveness of diesel particulate filters are inhibition of trap regeneration, through inhibition of the oxidation of NO to NO_2, and a dramatic loss in total PM control effectiveness due to the formation of sulfate PM. Unfortunately, these two mechanisms trade-off against one another in the design of diesel particulate filters. Changes to improve the reliability of regeneration by increasing catalyst loadings lead to increased sulfate emissions and, thus, loss of PM control effectiveness. Conversely, changes to improve PM control by reducing the use of platinum group metals and, therefore, limiting ''sulfate make'' leads to less reliable regeneration. We believe the only means of achieving good PM emission control and reliable operation is to reduce sulfur in diesel fuel, as shown in the following subsections.

a. Inhibition of Trap Regeneration Due to Sulfur

The passively regenerating diesel particulate filter technologies rely on the generation of a very strong oxidant, NO_2, to ensure that the carbon captured by the PM trap's filtering media is oxidized under the exhaust temperature range of normal operating conditions. This prevents plugging and failure of the PM trap. NO_2 is produced through the oxidation of NO in the exhaust across a platinum catalyst. This oxidation is inhibited by sulfur poisoning of the catalyst surface.[136] This inhibition limits the total amount of NO_2 available for oxidation of the trapped diesel PM, thereby raising the minimum exhaust temperature required to ensure trap regeneration. Without sufficient NO_2, the amount of PM trapped in the diesel particulate filter will continue to increase and can lead to excessive exhaust back pressure, low engine power, and even catastrophic failure of the diesel particulate filter itself.

The failure mechanisms experienced by diesel particulate filters due to low NO_2 availability vary significantly in severity and long term consequences. In the most fundamental sense, the failure is defined as an inability to oxidize the stored particulate at a rate fast enough to prevent net particulate accumulation over time. The excessive accumulation of PM over time blocks the passages through the filtering media, making it more restrictive to exhaust flow. In order to continue to force the exhaust through the now more restrictive filter, the exhaust pressure upstream of the filter must increase. This increase in exhaust pressure is commonly referred to as increasing ''exhaust backpressure'' on the engine.

The increase in exhaust backpressure represents increased work being done by the engine to force the exhaust gas through the increasingly restrictive particulate filter. Unless the filter is frequently cleansed of the trapped PM, this increased work can lead to reductions in engine performance and increases in fuel consumption. This loss in performance may be noted by the vehicle operator in terms of poor acceleration and generally poor driveability of the vehicle. In some cases, engine performance can be so restricted that the engine stalls, stranding the vehicle. This progressive deterioration of engine performance as more and more PM is accumulated in the filter media is often referred to as ''trap plugging.'' Trap plugging also has the potential to cause engine damage. If the exhaust backpressure gets high enough to open the exhaust valves prematurely, the exhaust valves can then strike the piston causing catastrophic engine failure. Whether trap plugging occurs, and the speed at which it occurs, will be a function of many variables in addition to the fuel sulfur level; these variables include the vehicle application, its duty cycle, and ambient conditions. However, if the fuel sulfur level is sufficiently high to prevent trap regeneration in any real world conditions experienced, trap plugging can occur. This is not to imply that any time a vehicle is refueled once with high sulfur fuel trap plugging will occur. Rather, it is important to know that the use of fuel with sulfur levels higher than 15 ppm significantly

[135] Hawker, P. *et al.*, Experience with a New Particualte Trap Technology in Europe, SAE 970182.

[136] Hawker, P. *et al*, Experience with a New Particulate Trap Technology in Europe, SAE 970182.

increases the chances of particulate filter failure.

Catastrophic failure of the filter can occur when excessive amounts of PM are trapped in the filter due to a lack of NO_2 for oxidation. This failure occurs when excessive amounts of trapped PM begin to oxidize at high temperatures (combustion-like temperatures of over 1000° C) leading to a ''run-away'' combustion of the PM. This can cause temperatures in the filter media to increase in excess of that which can be tolerated by the particulate filter itself. For the cordierite material commonly used as the trapping media for diesel particulate filters, the high thermal stresses caused by the high temperatures can cause the material to crack or melt. This can allow significant amounts of the diesel particulate to pass through the filter without being captured during the remainder of the vehicle's life. That is, the trap is destroyed and PM emission control is lost. Further the high temperatures generated during this event can destroy the downstream catalyst components, such as the NO_X adsorber, rendering them ineffective as well.

Full field test evaluations and retrofit applications of these catalytic trap technologies are occurring in parts of Europe where low sulfur diesel fuel is already available.[137] The experience gained in these field tests helps to clarify the need for low sulfur diesel fuel. In Sweden and some European city centers where below 10 ppm diesel fuel sulfur is readily available, more than 3,000 catalyzed diesel particulate filters have been introduced into retrofit applications without a single failure. Given the large number of vehicles participating in these test programs, the diversity of the vehicle applications which included intercity trains, airport buses, mail trucks, city buses and garbage trucks, and the extended time periods of operation (some vehicles have been operating with traps for more than 5 years and in excess of 300,000 miles[138]), there is a strong indication of the robustness of this technology on 10 ppm low sulfur diesel fuel. The field experience in areas where sulfur is capped at 50 ppm has been less definitive. In regions without extended periods of cold ambient conditions, such as the United Kingdom, field tests on 50 ppm cap low sulfur fuel have also been positive, matching the durability at 10 ppm, although sulfate PM emissions are much higher. However, field tests on 50 ppm fuel in Finland, where colder winter conditions are sometimes encountered (similar to many parts of the United States), showed a significant number of failures (~10 percent) due to trap plugging. This 10 percent failure rate has been attributed to insufficient trap regeneration due to fuel sulfur in combination with low ambient temperatures.[139] Other possible reasons for the high failure rate in Finland when contrasted with the Swedish experience appear to be unlikely. The Finnish and Swedish fleets were substantially similar, with both fleets consisting of transit buses powered by Volvo and Scania engines in the 10 to 11 liter range. Further, the buses were operated in city areas and none of the vehicles were operated in northern extremes such as north of the Arctic Circle.[140] Given that the fleets in Sweden and Finland were substantially similar, and given that ambient conditions in Sweden are expected to be similar to those in Finland, we believe that the increased failure rates noted here are due to the higher fuel sulfur level in a 50 ppm cap fuel versus a 10 ppm cap fuel.[141] Testing on an even higher fuel sulfur level of 200 ppm was conducted in Denmark on a fleet of 9 vehicles. In less than six months all of the vehicles in the Danish fleet had failed due to trap plugging.[142] The failure of some fraction of the traps to regenerate when operated on fuel with sulfur caps of 50 ppm and 200 ppm is believed to be primarily due to inhibition of the NO to NO_2 conversion as described here. Similarly the increasing frequency of failure with higher fuel sulfur levels is believed to be due to the further suppression of NO_2 formation when higher sulfur level diesel fuel is used.

As shown above, sulfur in diesel fuel inhibits NO oxidation leading to increased exhaust backpressure, reduced fuel economy, compromised reliability, and potentially engine damage. Therefore, we believe that, in order to ensure reliable and economical operation over a wide range of expected operating conditions, diesel fuel sulfur levels should be at or below 15 ppm. With these low sulfur levels we believe, as demonstrated by experience in Europe, that catalyzed diesel particulate filters will prove to be both durable and effective at controlling diesel particulate emissions. We did receive comments from the refining industry suggesting that PM filters could work on fuel sulfur levels as high as 50 ppm. The commenters pointed to some specific test programs where fuel with an approximate average sulfur level of 30 ppm was used as evidence of the robustness of the technology on higher sulfur fuels. While we do not deny that it is possible to operate some vehicles in limited applications over defined driving cycles on fuel as high as 30 ppm, we do not believe that this limited data should be the basis for a national program. The reality that some vehicles do fail on 50 ppm cap fuel, as demonstrated by the Finish fleet results mentioned above, shows that durability is not assured with the use of higher sulfur diesel fuel. We believe that the evidence, as a whole, shows that oxidation of NO to NO_2 will be poisoned due to these higher fuel sulfur levels with a resulting significant possibility of PM trap failures that is too great a concern for us to feel confident about a fuel sulfur level higher than 15 ppm.

b. Loss of PM Control Effectiveness

In addition to inhibiting the oxidation of NO to NO_2, the sulfur dioxide (SO_2) in the exhaust stream is itself oxidized to sulfur trioxide (SO_3) at very high conversion efficiencies by the precious metals in the catalyzed particulate filters. The SO_3 serves as a precursor to the formation of hydrated sulfuric acid (H_2SO_4+H_2O), or sulfate PM, as the exhaust leaves the vehicle tailpipe. Virtually all of the SO_3 is converted to sulfate under dilute exhaust conditions in the atmosphere as well in the dilution tunnel used in heavy-duty engine testing. Since virtually all sulfur present in diesel fuel is converted to SO_2, the precursor to SO_3, as part of the combustion process, the total sulfate PM is directly proportional to the amount of sulfur present in diesel fuel. Therefore, even though diesel particulate filters are very effective at trapping the carbon and the SOF portions of the total PM, the overall PM reduction efficiency of catalyzed diesel particulate filters drops off rapidly with increasing sulfur levels due to the formation of sulfate PM downstream of the trap.

[137] Through tax incentives 50 ppm cap sulfur fuel is widely available in the United Kingdom and 10 ppm sulfur is available in Sweden and in certain European city centers.

[138] Allansson, et al. SAE 2000–01–0480

[139] Letter from Dr. Barry Cooper, Johnson Matthey, to don Kopinski, US EPA, Air Docket A–99–06.

[140] Telephone conversation between Dr. Barry Cooper, Johnson Matthey, and Todd Sherwood, EPA, Air Docket A–99–06.

[141] The average temperature in Helsinki, Finland, for the month of January is 21° F. The average temperature in Stockholm, Sweden, for the month of Juanuary is 21° F. The average temperature at the University of Michigan in Ann Arbor, Michigan, for the month of January is 24° F. The temperatures reported here are from www.worldclimate.com based upon the Global Historical Climatology Network (GHCN) produced jointly by the National Climatic Data Center and Carbon Dioxide Information Analysis Center at Oak Ridge National Laboratory (ORNL).

[12] Letter from Dr. Barry Cooper to Don Kopinski US EPA, Air Docket A–99–06.

SO_2 oxidation is promoted across a catalyst in a manner very similar to the oxidation of NO, except it is converted at higher rates, with peak conversion rates in excess of 50 percent. The SO_2 oxidation rate for a platinum based oxidation catalyst typical of the type which might be used in conjunction with, or as a washcoat on, a catalyzed diesel particulate filter can vary significantly with exhaust temperature. At the low temperatures typical of some urban driving and the heavy-duty federal test procedure (HD–FTP), the oxidation rate is relatively low, perhaps no higher than ten percent. However at the higher temperatures that might be more typical of highway driving conditions and the Supplemental Emission Test (also called the EURO III or 13 mode test), the oxidation rate may increase to 50 percent or more. These high levels of sulfate make across the catalyst are in contrast to the very low SO_2 oxidation rate typical of diesel exhaust (typically less than 2 percent). This variation in expected diesel exhaust temperatures means that there will be a corresponding range of sulfate production expected across a catalyzed diesel particulate filter.

The US Department of Energy in cooperation with industry conducted a study entitled DECSE to provide insight into the relationship between advanced emission control technologies and diesel fuel sulfur levels. Interim report number four of this program gives the total particulate matter emissions from a heavy-duty diesel engine operated with a diesel particulate filter on several different fuel sulfur levels. A straight line fit through this data is presented in Table III.F–1 below showing the expected total direct PM emissions from a heavy-duty diesel engine on the supplemental emission test cycle.[143] The data can be used to estimate the PM emissions from heavy-duty diesel engines operated on fuels with average fuel sulfur levels in this range.

TABLE III.F–1.—ESTIMATED PM EMISSIONS FROM A HEAVY-DUTY DIESEL ENGINE AT THE INDICATED FUEL SULFUR LEVELS

Fuel sulfur [ppmm]	Supplemental emission test performance	
	Tailpipe PM [b] [g/bhp-hr]	PM increase relative to 3 to 3 ppm sulfur
3	0.003	.....
7 [a]	0.006	100%
15 [a]	0.009	200%
30	0.017	470%
150	0.071	2300%

[a] The PM emissions at these sulfur levels are based on a straight-line fit to the DECSE data; PM emissions at other sulfur levels are actual DECSE data. (Diesel Emission Control Sulfur Effects (DECSE) Program—Phase II Interim Data Report No. 4, Diesel Particulate Filters-Final Report, January 2000. Table C1.) Although DECSE tested diesel particulate filters at these fuel sulfur levels, they do not conclude that the technology is feasible at all levels, but they do note that testing at 150 ppm is a moot point as the emission levels exceed the engine's baseline emission level.

[b] b Total exhaust PM (soot, SOF, sulfate).

Table III.F–1 makes it clear that there are significant PM emission reductions possible with the application of catalyzed diesel particulate filters and low sulfur diesel fuel. At the observed sulfate PM conversion rates, the DECSE program results show that the 0.01 g/bhp-hr total PM standard is feasible for diesel particulate filter equipped engines operated on fuel with a sulfur level at or below 15 ppm. The results also show that diesel particulate filter control effectiveness is rapidly degraded at higher diesel fuel sulfur levels due to the high sulfate PM make observed with this technology. It is clear that PM reduction efficiencies are limited by sulfur in diesel fuel and that, in order to realize the PM emissions benefits sought in this rule, diesel fuel sulfur levels must be at or below 15 ppm. The data further indicates that were the fuel sulfur level set at a 30 ppm average, as some commenters suggested, the PM emissions from the controlled vehicles would be nearly three times the emissions from a vehicle operating on fuel with a 7 ppm average.

c. Increased Maintenance Cost for Diesel Particulate Filters Due to Sulfur

In addition to the direct performance and durability concerns caused by sulfur in diesel fuel, it is also known that sulfur can lead to increased maintenance costs, shortened maintenance intervals, and poorer fuel economy for particulate filters. Diesel particulate filters are highly effective at capturing the inorganic ash produced from metallic additives in engine oil. This ash is accumulated in the filter and is not removed through oxidation, unlike the trapped carbonaceous PM. Periodically the ash must be removed by mechanical cleaning of the filter with compressed air or water. This maintenance step is anticipated to occur on intervals of well over one hundred thousand miles. However, sulfur in diesel fuel increases this ash accumulation rate through the formation of metallic sulfates in the filter, which increases both the size and mass of the trapped ash. By increasing the ash accumulation rate, the sulfur shortens the time interval between the required maintenance of the filter and negatively impacts fuel economy.

2. Diesel NO_X Catalysts and the Need for Low Sulfur Fuel

All of the NO_X exhaust emission control technologies discussed previously in Section III are expected to utilize platinum to oxidize NO to NO_2 to improve the NO_X reduction efficiency of the catalysts at low temperatures or as in the case of the NO_X adsorber, as an essential part of the process of NO_X storage. This reliance on NO_2 as an integral part of the reduction process means that the NO_X exhaust emission control technologies, like the PM exhaust emission control technologies, will have problems with sulfur in diesel fuel. In addition, NO_X adsorbers have the added problem that the adsorption function itself is poisoned by the presence of sulfur. The resulting need to remove the stored sulfur (desulfate) leads to a need for extended high temperature operation which can deteriorate the NO_X adsorber. These limitations due to sulfur in the fuel affect the overall performance and feasibility of the technologies.

a. Sulfur Poisoning (Sulfate Storage) on NO_X Adsorbers

The NO_X adsorber technology relies on the ability of the catalyst to store NO_X as a nitrate (MNO_3) on the surface of the catalyst, or adsorber (storage) bed, during lean operation. Because of the similarities in chemical properties of SO_X and NO_X, the SO_2 present in the exhaust is also stored by the catalyst surface as a sulfate (MSO_4). The sulfate compound that is formed is significantly more stable than the nitrate compound and is not released and reduced during the NO_X release and reduction step (NO_X regeneration step). Since the NO_X adsorber is essentially 100 percent effective at capturing SO_2 in the adsorber bed, the sulfur build up on the adsorber bed occurs rapidly. As a result, sulfate compounds quickly occupy all of the NO_X storage sites on the catalyst

[143] Note that direct emisisons are those pollutants emitted directly from the engine or from the tailpipe depending on the context in which the term is used, and indirect emissions are those pollutants formed in the atmosphere through chemical reactions between direct emissions and other atmospheric constituents.

thereby rendering the catalyst ineffective for NO_X storage and subsequent NO_X reduction (poisoning the catalyst).

The stored sulfur compounds can be removed by exposing the catalyst to hot (over 650°C) and rich (air-fuel ratio below the stoichiometric ratio of 14.5 to 1) conditions for a brief period.[144] Under these conditions, the stored sulfate is released and reduced in the catalyst.[145] While research to date on this procedure has been very favorable with regards to sulfur removal from the catalyst, it has revealed a related vulnerability of the NO_X adsorber catalyst. Under the high temperatures used for desulfation, the metals that make up the storage bed can change in physical structure. This leads to lower precious metal dispersion, or ''metal sintering,'' (a less even distribution of the catalyst sites) reducing the effectiveness of the catalyst.[146] This degradation of catalyst efficiency due to high temperatures is often referred to as thermal degradation. Thermal degradation is known to be a cumulative effect. That is, with each excursion to high temperature operation, some additional degradation of the catalyst occurs.

One of the best ways to limit thermal degradation is by limiting the accumulated number of desulfation events over the life of the vehicle. Since the period of time between desulfation events is expected to be determined by the amount of sulfur accumulated on the catalyst (the higher the sulfur accumulation rate, the shorter the period between desulfation events) the desulfation frequency is expected to be proportional to the fuel sulfur level. In other words for each doubling in the average fuel sulfur level, the frequency and accumulated number of desulfation events are expected to double. We believe, therefore, that the diesel fuel sulfur level must be set as low as possible in order to limit the frequency and duration of desulfation events. Without control of fuel sulfur levels below 15 ppm, we can no longer conclude with any confidence that sulfur poisoning can be controlled without unrecoverable thermal degradation. Some commenters have suggested that the NO_X adsorber technology could meet the NO_X standard using diesel fuel with a 30 ppm average sulfur level. This would imply that the NO_X adsorber could tolerate as much as a four fold increase in desulfation frequency (when compared to an expected seven to 10 ppm average) without any increase in thermal degradation. This conclusion is inconsistent with our understanding of the technology that, with each desulfation event, some thermal degradation occurs. Therefore, we believe that diesel fuel sulfur levels must be at or below 15 ppm in order to limit the number and frequency of desulfation events. Limiting the number and frequency of desulfation events will limit thermal degradation and, thus, enable the NO_X adsorber technology to meet the NO_X standard.

Sulfur in diesel fuel for NO_X adsorber equipped engines will also have an adverse effect on fuel economy. The desulfation event requires controlled operation under hot and net fuel rich exhaust conditions. These conditions, which are not part of a normal diesel engine operating cycle, can be created through the addition of excess fuel to the exhaust. This addition of excess fuel causes an increase in fuel consumption. We have developed a spreadsheet model that estimates the frequency of desulfation cycles from published data and then estimates the fuel economy impact from this event.[147] Table III–F.2 shows the estimated fuel economy impact for desulfation of a NO_X adsorber at different fuel sulfur levels assuming a desired 90 percent NO_X conversion efficiency. The estimates in the table are based on assumed average fuel sulfur levels associated with different sulfur level caps. Note that, although we can estimate the fuel consumption penalty of operation on diesel fuel sulfur levels higher than 15 ppm, this analysis does not consider the higher degree of thermal degradation due to the more frequent desulfation events which are required for operation on these higher sulfur levels.

TABLE III.F–2.—ESTIMATED FUEL ECONOMY IMPACT FROM DESULFATION OF A 90% EFFICIENT NO_X ADSORBER

Fuel sulfur cap (ppm)	Average fuel sulfur (ppm)	Fuel economy penalty (in percent)
500	350	27
50	30	2
25	15	1
15	7	<1
5	2	<<<1

The table highlights that the fuel economy penalty associated with sulfur in diesel fuel is noticeable even at average sulfur levels as low as 15 ppm and increases rapidly with higher sulfur levels. It also shows that the use of a NO_X adsorber with a 15 ppm sulfur cap fuel would be expected to result in a fuel economy impact due to the need for desulfation of the catalyst of less than one percent, absent other changes in engine design. However, as discussed in Section G below, we anticipate that other engine modifications could be made to offset this fuel economy impact. For example, a NO_X control device in the exhaust system could allow use of fuel saving engine strategies, such as advanced fuel injection timing, that could be used to offset the increased fuel consumption associated with the NO_X adsorber. The result is that low sulfur fuel enables the NO_X adsorber which, in turn, enables fuel saving engine modifications. The total emission control system fuel economy impact, which we estimate to be zero under a 15 ppm cap program, is discussed below in Section III.G.

Future improvements in the NO_X adsorber technology are expected and needed if the technology is to provide the environmental benefits we have projected today. Some of these improvements are likely to include improvements in the means and ease of removing stored sulfur from the catalyst bed. However because the stored sulfate species are inherently more stable than the stored nitrate compounds (from stored NO_X emissions), we expect that a separate release and reduction cycle (desulfation cycle) will always be needed in order to remove the stored sulfur. Therefore, we believe that fuel with a sulfur level at or below 15 ppm sulfur will be necessary in order to control thermal degradation of the NO_X adsorber catalyst and to limit the fuel economy impact of sulfur in diesel fuel.

b. Sulfate Particulate Production and Sulfur Impacts on Effectiveness of NO_X Control Technologies

The NO_X adsorber technology relies on a platinum based oxidation function

[144] Dou, Danan and Bailey, Owen, ''Investigation of NO_X Adsorber Catalyst Deactivation,'' SAE 982594.

[145] Guyon M. et al, ''Impact of Sulfur on NO_X Trap Catalyst Activity—Study of the Regeneration Conditions'', SAE 982607.

[146] though it was favroable to decompose sulfate at 800°C, performance of the NSR (NO_X Storage Reduction catalyst, *i.e.* NO_X Adsorber) catalyst decreased due to sintering of precious metal.—Asanuma, T. *et al,* ''Influence of Sulfur Concentration in Gasoline on NO_X Storage—Reduction Catalyst'', SAE 1999–01–3501.

[147] Memo from Byron Bunker, to docket A–99–06, ''Estimating Fuel Economy Impacts of NO_X Adsorber De-Sulfurization.''

in order to ensure high NO_X control efficiencies. As discussed more fully in section III.F.1, platinum based oxidation catalysts form sulfate PM from sulfur in the exhaust gases significantly increasing PM emissions when sulfur is present in the exhaust stream. The NO_X adsorber technology relies on the oxidation function to convert NO to NO_2 over the catalyst bed. For the NO_X adsorber this is a fundamental step prior to the storage of NO_2 in the catalyst bed as a nitrate. Without this oxidation function the catalyst will only trap that small portion of NO_X emissions from a diesel engine which is NO_2. This would reduce the NO_X adsorber effectiveness for NO_X reduction from in excess of 90 percent to something well below 20 percent. The NO_X adsorber relies on platinum to provide this oxidation function due to the need for high NO oxidation rates under the relatively cool exhaust temperatures typical of diesel engines. Because of this fundamental need for a catalytic oxidation function, the NO_X adsorber inherently forms sulfate PM when sulfur is present in diesel fuel, since sulfur in fuel invariably leads to sulfur in the exhaust stream.

The Compact-SCR technology, like the NO_X adsorber technology, uses an oxidation catalyst to promote the oxidation of NO to NO_2 at the low temperatures typical of much of diesel engine operation. As discussed above, there are substantial questions regarding the ability of SCR systems to be implemented successfully to meet the requirements finalized today. By converting a portion of the NO_X emissions to NO_2 upstream of the ammonia SCR reduction catalyst, the overall NO_X reductions are improved significantly at low temperatures. Without this oxidation function, low temperature SCR NO_X effectiveness is dramatically reduced making compliance with the NO_X standard impossible. As discussed previously in Section III, platinum group metals are known to be good catalysts to promote NO oxidation, even at low temperatures.[148] Therefore, future Compact-SCR systems would need to rely on a platinum oxidation catalyst in order to provide the required NO_X emission control. This use of an oxidation catalyst in order to enable good NO_X control means that Compact SCR systems will produce significant amounts of sulfate PM when operated on anything but the lowest fuel sulfur levels due to the oxidation of SO_2 to sulfate PM promoted by the oxidation catalyst.

Without the oxidation catalyst promoted conversion of NO to NO_2, neither of these NO_X control technologies can meet the NO_X standard set here. Therefore each of these technologies will require low sulfur diesel fuel to control the sulfate PM emissions inherent in the use of oxidation catalysts. The NO_X adsorber technology may be able to limit its impact on sulfate PM emissions by releasing stored sulfur as SO_2 under rich operating conditions. The Compact-SCR technology, on the other hand, has no means to limit sulfate emissions other than through lower catalytic function or lowering sulfur in diesel fuel. The degree to which the NO_X emission control technologies increase the production of sulfate PM through oxidation of SO_2 to SO_3 varies somewhat from technology to technology, but it is expected to be similar in magnitude and environmental impact to that for the PM control technologies discussed previously in section III.F.1, since both the NO_X and the PM control catalysts rely on precious metals to achieve the required NO to NO_2 oxidation reaction.

Thus, we believe that diesel fuel sulfur levels will need to be at or below 15 ppm in order to apply any of these NO_X control technologies. Without this low sulfur fuel, the NO_X control technologies are expected to create PM emissions well in excess of the PM standard regardless of the engine-out PM levels. Again, as noted with the PM control technologies, test results to date on catalysts with high oxidation potential indicate that were the fuel sulfur level set with a 30 ppm average, as some commenters suggested, the PM emissions from the controlled vehicles would increase nearly three fold over the level expected from fuel with a 7 ppm average, the average fuel sulfur level we would expect from a 15 ppm cap fuel (see Table III.F.1).

3. What About Sulfur in Engine Lubricating Oils?

Current engine lubricating oils have sulfur contents which can range from 2,500 ppm to as high as 8,000 ppm by weight. Since engine oil is consumed by heavy-duty diesel engines in normal operation, it is important that we account for the contribution of oil derived sulfur in our analysis of the need for low sulfur diesel fuel. One way to give a straightforward comparison of this effect is to express the sulfur consumed by the engine as an equivalent fuel sulfur level. This approach requires that we assume specific fuel and oil consumption rates for the engine. Using this approach, estimates ranging from two to seven ppm diesel fuel sulfur equivalence have been made for the sulfur contribution from engine oil.[149] [150] If values at the upper end of this range accurately reflect the contribution of sulfur from engine oil to the exhaust this would be a concern as it would represent 50 percent of the total sulfur in the exhaust under a 15 ppm diesel fuel sulfur cap (with an average sulfur level assumed to be approximately seven ppm). However, we believe that this simplified analysis, while valuable in demonstrating the need to investigate this issue further, overstates the likely sulfur contribution from engine oil by a significant amount due to its inclusion of engine oil lost through the open crankcase system in the estimate of oil consumption to the exhaust.

Current heavy-duty diesel engines operate with open crankcase ventilation systems which ''consume'' oil by carrying oil from the engine crankcase into the environment. This consumed oil is correctly included in the total oil consumption estimates, but should not be included in estimates of oil entering the exhaust system for this analysis, since as currently applied this oil is not introduced into the exhaust. At present we estimate that the majority of lube oil consumed by an engine meeting the 0.1 g/bhp-hr PM standard is lost through crankcase ventilation, rather than through the exhaust. Based on assumed engine oil to PM conversion rates and historic soluble organic fraction breakdowns we have estimated the contribution of sulfur from engine oil to be less than two ppm fuel equivalency. With our action to close the crankcase, coupled with the use of closed crankcase ventilation systems that separate in excess of 90 percent of the oil from the blow-by gases, we believe that this very low contribution of lube oil to sulfur in the exhaust can be maintained. For a further discussion of our estimates of the sulfur contribution from engine oil refer to the final RIA in the docket.

G. Fuel Economy Impact of High Efficiency Control Technologies

The high efficiency emission control technologies expected to be applied in order to meet the NO_X and PM standards involve wholly new system components integrated into engine designs and calibrations, and as such

[148] Platinum group metals include platinum, palladium, rhodium, and other precious metals.

[149] Whitacre, Shawn. ''Catalyst Compatible'' Diesel Engine Oils, DECSE Phase II, Presentation at DOE/NREL Workshop ''Exploring Low Emission Diesel Engine Oils.'' January 31, 2000.

may be expected to change the fuel consumption characteristics of the overall engine design. After reviewing the likely technology options available to the engine manufacturers, we believe that the integration of the engine and exhaust emission control systems into a single synergistic emission control system will lead to heavy-duty vehicles which can meet demanding emission control targets without increasing fuel consumption beyond today's levels.

1. Diesel Particulate Filters and Fuel Economy

Diesel particulate filters are anticipated to provide a step-wise decrease in diesel particulate (PM) emissions by trapping and oxidizing the diesel PM. The trapping of the very fine diesel PM is accomplished by forcing the exhaust through a porous filtering media with extremely small openings and long path lengths.[151] This approach results in filtering efficiencies for diesel PM greater than 90 percent but requires additional pumping work to force the exhaust through these small openings. The additional pumping work is anticipated to increase fuel consumption by approximately one percent.[152] However, we believe this fuel economy impact can be regained through optimization of the engine—PM trap—NO_X adsorber system, as discussed below.

2. NO_X Control Technologies and Fuel Economy

NO_X adsorbers are expected to be the primary NO_X control technology introduced in order to provide the reduction in NO_X emissions envisioned in this rulemaking. NO_X adsorbers work by storing NO_X emissions under fuel lean operating conditions (normal diesel engine operating conditions) and then by releasing and reducing the stored NO_X emissions over a brief period of fuel rich engine operation. This brief periodic NO_X release and reduction step is directly analogous to the catalytic reduction of NO_X over a gasoline three-way catalyst. In order for this catalyst function to occur the engine exhaust constituents and conditions must be similar to normal gasoline exhaust constituents. That is, the exhaust must be fuel rich (devoid of excess oxygen) and hot (over 250°C). Although it is anticipated that diesel engines can be made to operate in this way, it is assumed that fuel economy while operating under these conditions will be worse than normal. We have estimated that the fuel economy impact of the NO_X release and reduction cycle would, all other things being equal, increase fuel consumption by approximately one percent. Again, we believe this fuel economy impact can be regained through optimization of the engine—PM trap—NO_X adsorber system, as discussed below.

In addition to the NO_X release and regeneration event, another step in NO_X adsorber operation may affect fuel economy. As discussed earlier, NO_X adsorbers are poisoned by sulfur in the fuel even at the low sulfur levels mandated here. As discussed in the RIA, we anticipate that the sulfur poisoning of the NO_X adsorber can be reversed through a periodic ''desulfation'' event. The desulfation of the NO_X adsorber is accomplished in a similar manner to the NO_X release and regeneration cycle described above. However it is anticipated that the desulfation event will require extended operation of the diesel engine at rich conditions.[153] This rich operation will, like the NO_X regeneration event, require an increase in the fuel consumption rate and will cause an associated decrease in fuel economy. With a 15 ppm fuel sulfur cap, we are projecting that fuel consumption for desulfation would increase by one percent or less, which we believe can be regained through optimization of the engine-PM trap-NO_X adsorber system as discussed below.

While NO_X adsorbers require non-power producing consumption of diesel fuel in order to function properly and, therefore, have an impact on fuel economy, they are not unique among NO_X control technologies in this way. In fact NO_X adsorbers are likely to have a very favorable NO_X to fuel economy trade-off when compared to other NO_X control technologies like cooled EGR and injection timing retard that have historically been used to control NO_X emissions. Today, most diesel engines rely on injection timing control (retarding injection timing) in order to meet the 4.0 g/bhp-hr NO_X emission standard. For 2004 model year compliance, we expect that engine manufacturers will use a combination of cooled EGR and injection timing control to meet the 2.0 g/bhp-hr NO_X standard. Because of the more favorable fuel economy trade-off for NO_X control with EGR when compared to timing control, we have forecast that less reliance on timing control will be needed in 2004. Therefore, fuel economy will not be changed even at this lower NO_X level.

NO_X adsorbers have a significantly more favorable NO_X to fuel economy trade-off when compared to cooled EGR or timing retard alone, or even when compared to cooled EGR and timing retard together.[154] Current NO_X adsorber data show greater than 90 percent reduction in NO_X emissions over the SET, while only increasing fuel consumption by a very reasonable two percent. Further the data show that, for significant portions of the engine's typical operating range, NO_X control in excess of 98 percent is possible even with engine-out emissions as high as 5 g/bhp-hr.[155] Therefore, we expect manufacturers to take full advantage of the NO_X control capabilities of the NO_X adsorber and project that they will decrease reliance on technologies with a less favorable emissions to fuel economy trade-off, especially injection timing retard, when operating at conditions where the NO_X adsorber performance is significantly greater than 90 percent. We would therefore predict that the fuel economy impact currently associated with NO_X control from timing retard would be decreased by at least three percent. In other words, through the application of advanced NO_X emission control technologies, which are enabled by the use of low sulfur diesel fuel, we expect the NO_X trade-off with fuel economy to continue to improve significantly when compared to today's technologies. This will result in both much lower NO_X emissions, and potentially overall improvements in fuel economy. Improvements could easily offset the fuel consumption of the NO_X adsorber itself and, in addition, the one percent fuel economy loss projected to result from the application of PM filters. Consequently, we are projecting no fuel economy penalty to result from this rule.

3. Emission Control Systems for 2007 and Net Fuel Economy Impacts

We anticipate that, in order to meet the stringent NO_X and PM emission standards set today, the engine manufacturers will integrate engine-based emission control technologies and

[150] This estimate assumes that a heavy-duty diesel engine consumes 1 quart of engine oil in 2,000 miles of operation, consumes fuel at a rate of 1 gallon per 6 miles of operation and that engine oil sulfur levels range from 2,000 to 8,000 ppm.

[151] Typically, the filtering media is a porous ceramic monolith or a metallic fiber mesh.

[152] Engine, Fuel, and Emissions Engineering, Incorporated, ''Economic Analysis of Diesel Aftertreatment System Changes Made Possible by Reduction of Diesel Fuel Sulfur Content,'' December 14, 1999, Air Docket A–99–06.

[154] Zelenka, P. *et al,* Cooled EGR—A Key Technology for Future Efficient HD Diesels, SAE 980190, Society of Automotive Engineers 1998. Figure 2 from this paper gives a graphical representation of how new technologies (including exhaust emission control technologies) can shift the trade-off between NO_X emissions and fuel economy.

[155] ''2007 Diesel Emission Test Program, Initial Test Report,'' December 11, 2000, Air Docket A–99–06, Item IV–A–29.

post-combustion emission control technologies into a single systems-based approach that will fundamentally shift historic trade-offs between emissions control and fuel economy. As outlined in the preceding two sections, individual components in this system will introduce new constraints and opportunities for improvements in fuel efficient control of emissions. Having considered the many opportunities to fundamentally improve these relationships, we believe that it is unlikely that fuel economy will be lower than today's levels and, in fact, may improve through the application of these new technologies and this new systems approach. Therefore, for our analysis of economic impacts in Section V, no penalty or benefit for changes to fuel economy are considered.

H. Review of the Status of Heavy-Duty Diesel NO_X Emission Control Technology

In the NPRM, we provided a detailed technical evaluation of test data and other information that concluded that the proposed program would be technologically feasible for all heavy-duty engines. During the public comment period, we received many comments as well as additional information about the likely status and capability of emission control technology development in the 2007 time frame. To this information we have added our own updated evaluation of test data as well as technical information developed by ourselves and others.

Based on this information, and as discussed in Sections III.E and III.F above, we now have an even higher degree of confidence that manufacturers will be able to meet the new heavy-duty standards. Manufacturers of heavy-duty gasoline engines will apply essentially the same technology that is being developed for light-duty trucks under the Tier 2 program and should not have major problems doing so, especially given the significant available lead time. Regarding diesels, although the technological challenges are somewhat greater than for gasoline engines, we believe that manufacturers will achieve the engine standards adopted today for 2007 and later years, in conjunction with the low sulfur diesel fuel we are also requiring.

As we discussed earlier, there are two primary technologies that diesel engine manufacturers expect to use to meet the standards adopted in today's rule, and they are at different stages of commercial development. Catalyzed diesel PM trap technologies are in widespread fleet testing today, we have shown that there are no serious impediments to the widespread application of this technology to heavy-duty diesel engines that can meet our new standards by 2007, if not earlier. Diesel NO_X adsorber technology, the emission control technology we believe will be used for heavy-duty diesel engines to meet the very low NO_X emission standards adopted today, is less developed relative to PM control technology. Still, as we discussed earlier, we have identified a clear technological pathway to compliance with the NO_X standards using NO_X adsorber technology. While we do not anticipate major obstacles in commercializing these systems by 2007, it is important that the various parties in the industry continue to make good progress in their development of NO_X adsorber technology for heavy-duty diesel engines.

As a mechanism for monitoring and evaluating this technological progress, we believe it will be important to publicly reassess the status of heavy-duty diesel NO_X adsorber systems on an ongoing basis. To accomplish this, we will conduct regular biennial reviews of the status of heavy-duty NO_X adsorber technology. For each review, we will collect and analyze information from engine manufacturers, NO_X adsorber manufacturers, our own testing, and other sources. At the end of each review cycle, we will release (and post on the Web) a report discussing the status of the technology and any implications for the heavy-duty engine emission control program. We will release the first report by December 31, 2002 and subsequent reports at the end of each second year through December 31, 2008. This biennial process is similar to that used by the State of California to monitor and evaluate their emission control programs.

IV. Our Program for Controlling Highway Diesel Sulfur

With today's action, we are requiring substantial reductions in highway diesel fuel sulfur levels nationwide, because sulfur significantly inhibits the ability of the diesel emission control devices to function which are necessary to meet the emission standards finalized today. With the highway diesel fuel sulfur standard we are finalizing today, we have concluded that there will be technology available to achieve the reductions required by the stringent emission standards we are implementing for model year 2007 and later heavy-duty engines.

In developing the provisions of the fuel program being adopted today, we identified several goals that we want the program to achieve. First, we must ensure that there will be an adequate supply of highway diesel fuel for all vehicles. Second, we must ensure that low sulfur diesel fuel will be readily available nationwide for the 2007 and later model year heavy-duty vehicles that need it. Finally, we want to ensure a smooth transition to low sulfur fuel.

In the NPRM, we proposed that refiners be required to start producing all of their highway diesel fuel at the 15 ppm sulfur level beginning in 2006. We also requested comment on a range of options for transitioning to the low sulfur diesel fuel over time. With regard to the programmatic goals noted above, the proposed approach, which would have required all highway diesel fuel to meet the 15 ppm sulfur standard in 2006, guaranteed availability of the low sulfur diesel fuel throughout the nation. However, many commenters stated concerns that the proposed program would not ensure adequate overall supplies of highway diesel fuel, especially if some refiners chose not to continue producing highway diesel fuel to avoid the changes needed to meet the low sulfur levels.

The final diesel fuel program we are adopting today includes flexibilities for the refining industry as a whole, as well as additional flexibilities for refiners experiencing hardship circumstances. First, the program gives refiners a temporary compliance option for low sulfur diesel fuel beginning in mid-2006. The final program also includes additional flexibilities for refineries located in certain western states (the Geographic Phase-In Area (GPA) [156]), provisions for qualifying small refiners, and a general hardship provision for which any refiner may apply under certain conditions. These flexibilities ensure that the vast majority of refiners nationwide can fully comply at the earliest possible date while avoiding an excessive burden on a subset of refiners. The following section details each of the requirements of the highway diesel fuel program for refiners and importers, summarizes the analyses we have performed on the impacts of the temporary compliance option being adopted today, and describes additional information we have received that supports the changes made to the proposed program. Section VII provides additional information about the

[156] As defined in the Tier 2 final rulemaking (see 65 FR 6698, February 10, 2000), the GPA encompasses the states of Alaska, Colorado, Idaho, Montana, New Mexico, North Dakota, Utah and Wyoming. Note that minor changes to this area are currently under consideration. Any such changes subsequent to today's rule are intended to be carried over into today's rule as well.

compliance and enforcement provisions that will accompany these requirements.

We believe the highway diesel fuel program we are adopting today meets all of the programmatic goals noted above. We believe that the final program will ensure that the overall supply of highway diesel fuel will be sufficient for all vehicles. To the extent there may have been supply concerns with a complete fuel turnover to low sulfur diesel in 2006 as some commenters have suggested, the flexibilities for refiners contained in the final program will serve as a ''safety valve'' by allowing up to 25 percent of the highway diesel fuel to remain at the current 500 ppm sulfur standard and providing additional time, if needed, for some refiners to fully convert over to low sulfur fuel. The combination of flexibilities provided to refiners in today's final rule should eliminate any concerns about the potential for supply shortfalls of highway diesel fuel. The final diesel fuel program is carefully structured so that we are confident there will be widespread availability of low sulfur fuel across the nation for 2007 and later model heavy-duty vehicles. In this way, the important health benefits of this program to people throughout the country can be achieved expeditiously, at a reasonable cost, while minimizing the burden on the affected industries.

This section also summarizes our technical feasibility analysis of the low sulfur highway diesel fuel program, and the impact of the program on other fuel properties and specialty fuels. Finally, the following section describes how state programs will be affected by today's action including a provision that allows the State of Alaska the option of developing an alternative transition plan for implementing low sulfur fuel.

A. Highway Diesel Sulfur Standards for Refiners and Importers

The requirements of the highway diesel fuel sulfur control program will become effective in time to be available with the introduction of the first heavy-duty engines meeting the model year 2007 and later engine standards we are adopting today. The following paragraphs describe the requirements, standards, and deadlines that apply to refiners and importers of highway diesel fuel and the options available to all refiners.

1. *Standards and Deadlines That Refiners and Importers Must Meet*

As described earlier in Section III.H. above, the new standards being adopted today for heavy-duty engines will begin with the 2007 model year. With today's action, we are adopting specific dates when fuel intended to be marketed as low sulfur diesel fuel must be produced at the refinery, distributed at the terminal level, and marketed at the retail level. Refiners and importers are required to produce highway diesel fuel meeting the 15 ppm sulfur standard beginning June 1, 2006.[157] At the terminal level, highway diesel fuel sold as low sulfur fuel is required to meet the 15 ppm sulfur standard beginning July 15, 2006. For retail stations and wholesale purchaser-consumers, highway diesel fuel sold as low sulfur fuel must meet the 15 ppm sulfur standard by September 1, 2006.

In the NPRM, we proposed a set of compliance dates slightly earlier than the dates contained in today's final rule. Under the proposal, refiners, terminals and retailers would have had to begin producing low sulfur diesel fuel by April 1, 2006, May 1, 2006 and June 1, 2006, respectively. Several commenters pointed out that the April introduction date for refiners occurred at the same time refiners would be changing over from winter to summer gasoline to comply with Reid Vapor Pressure (RVP) requirements. They recommended that the introduction of low sulfur diesel fuel be delayed for a couple of months to provide refiners and the distribution system the opportunity to focus on the two conversions separately and ensure that each occurs as designed. Commenters also suggested that we extend the time period between the refinery and downstream deadlines to better allow for the time it may take the distribution system to make a complete transition to the 15 ppm sulfur level.

In response to these concerns, today's action provides a few additional months for introduction of the low sulfur diesel fuel compared to the NPRM and provides an additional month between the refinery and retail compliance dates, to provide a smoother transition through the distribution system. We believe the additional time provides appropriate relief for the refiners, while still assuring that low sulfur diesel fuel will be available at the retail level no later than September 1, 2006. This schedule will allow manufacturers to introduce 2007 and later model year diesel engines and vehicles as early as September 1, 2006. While a slight delay from the dates of the proposal, the Agency does not believe this delay will place any undue burden on the engine manufacturers. Historically, new heavy-duty vehicle models were introduced on or around January 1 (of the same calendar year as the model year). Only recently, manufacturers have begun introducing some model lines earlier, particularly light heavy-duty vehicles.

In the NPRM, we proposed that all highway diesel fuel be required to comply with the 15 ppm sulfur standard starting in 2006. Today's program includes a combination of flexibilities available to refiners to ensure a smooth transition to low sulfur highway diesel fuel. Refiners can take advantage of a temporary compliance option, including an averaging, banking and trading component, beginning in June 2006 and lasting through 2009, with credit given for early compliance before June 2006. Under this option, up to 20 percent of highway diesel fuel may continue to be produced at the existing 500 ppm sulfur maximum standard, though it must be segregated from 15 ppm fuel in the distribution system, and may only be used in pre-2007 model year heavy-duty vehicles. We are providing additional hardship provisions for small refiners to minimize their economic burden in complying with the 15 ppm sulfur standard and giving additional flexibility to refiners subject to the Geographic Phase-in Area (GPA) provisions of the Tier 2 gasoline sulfur program, which will allow them the option of staggering their gasoline and diesel investments. Finally, we are adopting a general hardship provision for which any refiner may apply on a case-by-case basis under certain conditions. These hardship provisions, coupled with the temporary compliance option, will provide a ''safety valve'' allowing up to 25 percent of highway diesel fuel produced to remain at 500 ppm for these transitional years to effectively address the concerns over highway diesel fuel supply.

It should be noted that the requirements of the fuel program described below apply to refiners and importers only.[158] We are not adopting any retailer availability requirements

[157] Highway diesel fuel (referred to as motor vehicle diesel fuel in the regulatory language to be consistent with language in existing laws and regulations) includes any diesel fuel or any distillate product that is used, intended for use, or made available for use as a fuel in highway diesel vehicles or engines that are subject to the standards finalized today. However, kerosene or other distillates such as JP–8 are only considered to be highway diesel fuel and thus subject to our program at the point in the production or distribution system that they are either designated as such, or otherwise used, intended for use, or made available for use in highway diesel vehicles. Thus, if refiners do not designate these other distillates as highway diesel fuel, they are not subject to the 15 ppm sulfur standard.

[158] As described above, distributors and retailers marketing low sulfur diesel fuel have deadlines for compliance with the sulfur standards, as well as other requirements such as pump labeling. Section VII of today's action provides further details on the downstream requirements for distributors and retailers.

with these provisions. In other words, we are not requiring that diesel retailers sell the 15 ppm fuel. Rather, retailers may sell 15 ppm sulfur diesel fuel, 500 ppm sulfur diesel fuel, or both. We believe the program being adopted today for refiners and importers will ensure that adequate supplies of low sulfur diesel fuel are available throughout the nation. The voluntary compliance and hardship provisions have been designed with a required level of production that we believe will ensure that 15 ppm fuel is distributed widely through pipelines and at terminals throughout the country without the need for a retailer availability requirement. Our analysis supporting the design of these provisions can be found in Chapter IV of the RIA for today's action.

2. *Temporary Compliance Option for Refiners and Importers*

We believe there are several advantages to allowing some flexibility in the early years of the program such that not all of the highway diesel fuel pool must be converted to low sulfur diesel fuel at one time. First, some commenters expressed concerns over adequate supplies of highway diesel fuel if the entire pool converted to low sulfur diesel fuel in 2006, because they believe some refiners might produce less total highway diesel fuel volume or choose to leave the highway diesel fuel market altogether. Allowing the temporary compliance option lowers this concern because a portion of the highway diesel pool can remain at the current 500 ppm sulfur standard, if necessary, providing additional time for the market to adjust. This portion of the highway diesel pool that refiners choose to delay will likely be the portion that is more costly for them to desulfurize and, thus, most likely to raise concerns with respect to shortfalls. Second, a temporary compliance option can benefit refiners by reducing the fuel production costs in the early years of the program, because refiners are able to spread out their capital investments. The option also benefits refiners by spreading out the industry-wide demand for engineering and construction resources over several years, and also by allowing more time between the gasoline sulfur and diesel sulfur compliance dates. Third, refiners that are able to delay investment could attain lower costs for such equipment as technology improvements are realized during that time and as refiners see how well the desulfurization technologies achieve the 15 ppm sulfur standard.

The primary emissions benefits of low sulfur highway diesel fuel are the emissions reductions that will occur over time as new vehicles designed to meet the emission standards adopted today are introduced into the vehicle fleet. Consequently, in the NPRM we requested comment on several options that would allow refiners and importers to phase in the production of low sulfur highway diesel fuel. With today's action, we are adopting a temporary compliance option for refiners and importers that will allow them to produce less than 100 percent of their highway diesel fuel at the 15 ppm sulfur level. Refiners and importers may choose to participate in the compliance option on a refinery-by-refinery basis. A refiner must demonstrate compliance with the compliance option on an annual basis. Refiners with special financial hardships have additional flexibility provisions, which are described further in Section IV.C.

We believe today's temporary compliance option in combination with the hardship provisions discussed in Section IV.C. has the potential to provide flexibility to more than half of all U.S. refineries by allowing up to 25 percent[159] of the highway diesel fuel volume in the country to continue to be produced at the current sulfur level of 500 ppm. We estimate that refiners will be able to save as much as $1.7 billion over the duration of the optional compliance program compared to the proposed requirement that all highway diesel fuel comply with 15 ppm sulfur in 2006. Much, but not all, of this potential savings will be offset by increased costs in the distribution system. We project that in total a small overall savings should result from refiners taking advantage of the temporary compliance option.

Under the temporary compliance option finalized today, a refinery may produce up to 20 percent of its total highway diesel fuel at the existing highway diesel fuel sulfur standard of 500 ppm, determined on an annual basis. The remaining 80 percent of the highway diesel fuel produced at that refinery during the year must meet a sulfur standard of 15 ppm.[160] As part of this temporary compliance option, a PADD-based averaging, banking, and trading (ABT) program will be available. Figure IV–1 presents the five PADDs into which the United States is divided.[161] For example, a refinery could produce more than 80 percent of its highway diesel fuel as low sulfur diesel fuel and generate credits based on the volume of highway diesel fuel produced at 15 ppm that exceeded the 80 percent requirement. Within that same PADD (within the limits noted below for California, Alaska, Hawaii, and any state with an EPA-approved waiver from the federal program), these credits may be averaged with another refinery owned by that refiner, banked for use in future years, or sold to another refinery.

BILLING CODE 6560–50–P

[159] Up to 5 percent of which is small refiner production.

[160] We are aware that today there are refiners that produce one grade of diesel fuel for both highway and off-highway purposes, where dye is added by parties downstream if it is to be sold as off-highway diesel fuel. To the extent possible, we do not want to interfere with this practice. Consequently, for purposes of determining compliance with these optional requirements, a refiner producing all 15 ppm fuel may include the entire volume it produces in the calculation. Furthermore, a refiner producing all 500 ppm fuel must count any diesel fuel produced with a sulfur content of 500 ppm or less unless it has been dyed by the refiner to be used as nonroad diesel fuel. A refiner would only include kerosene in its volume calculation if the kerosene is less than 500 ppm sulfur content and the kerosene is blended at the refinery into non-dyed fuel with a sulfur content of less than 500 ppm.

[161] The Department of Energy divides the United States into five Petroleum Administrative Districts for Defense, or PADDs. The states encompassed by each of the five PADDs are defined in the Code of Federal Regulations at Title 40, § 80.41.

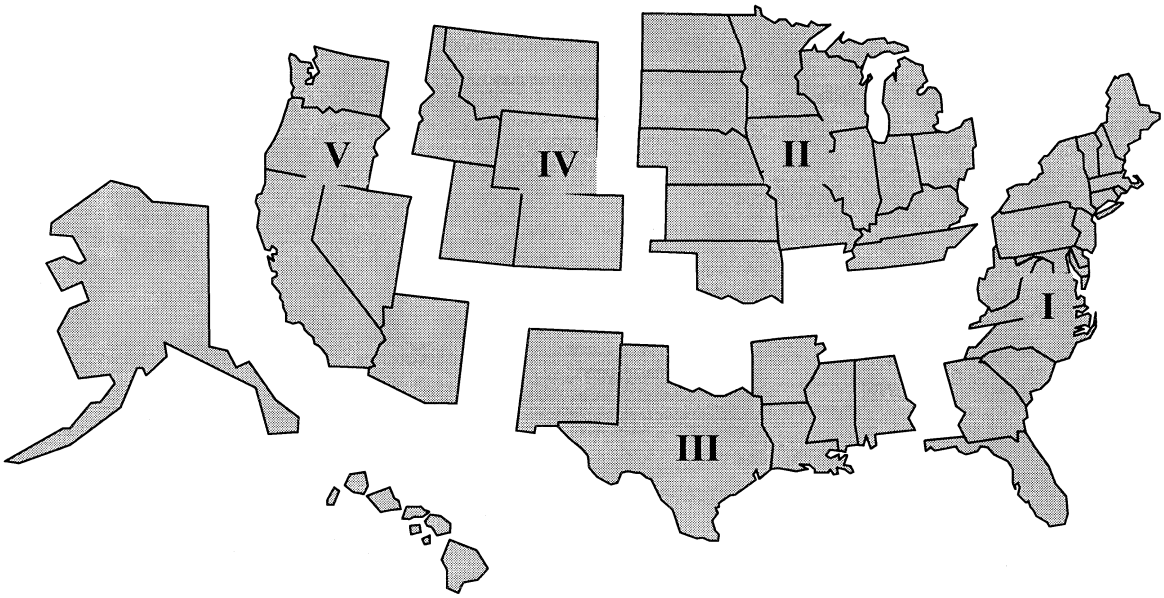

Figure IV-1. Petroleum Administrative Districts for Defense (PADDs)

BILLING CODE 6560–50–C

Also, a refinery may produce less than 80 percent of its highway diesel fuel at the 15 ppm sulfur level, as long as it obtains enough credits from another refinery within the PADD to offset the volume of 500 ppm sulfur fuel produced that exceeded the 20 percent of highway diesel fuel allowed to be produced at the 500 ppm sulfur level. As noted above, any credit trading will be limited to those refineries within the same PADD (within the limits noted below for California, Alaska, Hawaii, and any state with an EPA-approved waiver from the federal program). This restriction is necessary to limit the possibility that any area of the country is dominated by refineries complying via purchases of credits and, thus, producing a small volume of low sulfur diesel fuel, which could lead to concerns that the low sulfur diesel fuel would not be sufficiently available throughout the country.

Based on an extensive analysis which incorporates the hardship provisions and GPA refiner provisions discussed in Section IV.B. and C., we have chosen a level of 80 percent to have confidence that there will be widespread availability of 15 ppm fuel throughout the United States. Given the requirements of today's program, we believe that all pipelines are likely to carry the 15 ppm fuel. Pipelines that may be able to carry only one grade of highway diesel fuel are likely to carry 15 ppm as the majority diesel fuel in the market.[162] Those that are able to carry more than one grade of highway diesel fuel will facilitate the distribution of the remaining 500 ppm fuel. In addition, to ensure widespread availability of low sulfur diesel fuel throughout the nation, we have found it necessary to set the 15 ppm production threshold high enough so that there is a sufficient geographic scattering of refineries producing low sulfur diesel fuel around the country. At a lower threshold, there could be isolated regions of the country where 15 ppm fuel would not be available in sufficient quantities.

We have analyzed the refinery/pipeline distribution system in the United States in the context of the small refiner hardship and other provisions of the rule and believe a 80 percent temporary compliance option level for 15 ppm is necessary to achieve widespread availability and avoid shortages in specific areas. At levels below an 80 percent level, we would have concerns over whether 15 ppm sulfur diesel fuel would be the primary highway diesel fuel distributed through pipelines and whether the low sulfur diesel fuel would be available to all areas of the country in sufficient quantities. The reader is directed to Chapter IV of the RIA for today's action for our complete analysis supporting the development of the temporary compliance option.

[162] Today, many pipelines carry only one grade of distillate (*e.g.,* only 500 ppm sulfur high diesel fuel) rather than both 500 ppm sulfur highway fuel and off-highway fuel which has even higher levels of sulfur (*e.g.,* on the order of 3,000 ppm).

While we have set the minimum requirement under the compliance option at 80 percent, we believe most refineries will focus on production of one grade or the other. We expect that certain refineries will find it more economically advantageous to install the necessary equipment to produce all of their highway diesel fuel at the 15 ppm sulfur level and generate credits. Conversely, other refineries may find it advantageous to continue producing all of their highway diesel fuel at the 500 ppm sulfur fuel through the period of the compliance option, by obtaining credits to demonstrate compliance. This will provide additional time for those refiners that have not converted to low sulfur fuel. This will allow refiners to spread out their capital investments and provide more time to arrange for engineering and construction resources. In addition, the refiners that are able to delay investment could attain lower costs for such equipment as technology improvements are realized during that time and as refiners see how well the range of desulfurization technologies works to achieve the 15 ppm sulfur standard.

Foreign refiners may choose to participate in the temporary compliance option. For purposes of determining compliance with the low sulfur diesel requirements, foreign refiners must demonstrate compliance based on the amount of highway diesel fuel they import into the United States. Therefore, a given foreign refiner must demonstrate that at least 80 percent of the highway diesel fuel it imported into each PADD

meets a 15 ppm sulfur level, or show that it has enough credits from other refiners in the PADD into which it imported the fuel to cover the volume of fuel below the 80 percent requirement. Foreign refineries may also generate credits if they exceed the 80 percent requirement in a given PADD, and may sell those credits within the same PADD. A foreign refiner may also choose to not participate in the temporary compliance option and, as described below, let the fuel importer be the party which demonstrates compliance.

Importers of highway diesel fuel (i.e., companies that import fuel but are not solely refiners) may also participate in the temporary compliance option. Importers must demonstrate that at least 80 percent of the highway diesel fuel imported into each PADD (within the limits noted below for California, Alaska, Hawaii, and any state with an EPA-approved waiver from the federal program) meets a 15 ppm sulfur level, or show that they have enough credits from other refiners in the PADD into which the fuel is imported to cover the volume of fuel below the 80 percent requirement. Importers may also generate credits if they exceed the 80 percent requirement in a given PADD. Importers that import highway diesel fuel from foreign refiners that are participating in the temporary compliance option must exclude the volume of fuel purchased from those refiners in their compliance calculations or credit generation calculations.

Because we expect most refineries to choose to produce fuel either all at the 15 ppm sulfur level or all at the 500 ppm sulfur level, credits will be generated by some refiners and desired by others. Thus, the ABT program will play an important part in achieving overall compliance. The details of the ABT program are described below.

a. Generating Credits

Beginning on June 1, 2006 and continuing through December 31, 2009, refineries and importers may generate credits based on the volume of low sulfur diesel fuel produced above the required percentage (i.e., 80 percent). One credit will be generated for every gallon of highway diesel fuel produced at 15 ppm sulfur that exceeds the 80 percent requirement. Credits will be calculated on a calendar-year basis. For example, if a refinery produces 10 million gallons of highway diesel fuel in 2007, it must produce 80 percent of its highway diesel volume (8 million gallons) as low sulfur during 2007. If the refinery actually produces 100 percent of its highway diesel fuel as low sulfur during 2007, it can generate credits based on the volume of the ''extra'' 20 percent of low sulfur fuel it produced above the required minimal percentage—that is, two million gallons of credits. Because the requirements for low sulfur fuel begin in the middle of 2006, a refinery will generate credits in 2006 based on the volume of low sulfur fuel produced beginning June 1, 2006 that exceeds 80 percent of the highway diesel fuel produced at its facility between June 1, 2006 and December 31, 2006. Once credits are generated by a refinery, they may be used by the refinery for averaging purposes with other refineries owned by the same refiner, traded to another refinery, or banked for use in future calendar year averaging or trading. Credits may only be used in the PADD in which they are generated, with the further limitations on credit generation and use in PADD V noted below for California, Alaska, and Hawaii.

Refineries may no longer generate credits after December 31, 2009. Beginning January 1, 2010, every refinery must either comply with the low sulfur diesel fuel requirements by (1) producing 100 percent of its highway diesel fuel at the 15 ppm sulfur level or (2) by using credits through May 31, 2010 to demonstrate compliance with the 100 percent requirement, provided that banked credits are available to the refinery (described in more detail below). Starting June 1, 2010, all refineries must produce 100 percent of their highway diesel fuel as low sulfur fuel (without the use of credits).

Finally, early credits, or credits from low sulfur fuel produced at a refinery prior to June 1, 2006, may be generated, but only under limited circumstances. Unlike in the Tier 2 program, where significant emission benefits accrued with the early introduction of low sulfur gasoline, very little emission benefit (only a small reduction in sulfate PM emissions from the in-use fleet) will result from the early introduction of 15 ppm diesel fuel. Consequently, the main purpose in allowing early credits under the diesel program is to smooth program implementation beginning June 1, 2006, by allowing a pool of credits to be available upon program startup. By allowing the generation of early credits, both purchasers and sellers of credits can have confidence in the legitimacy of the credits traded, which, in turn, allows for the purchaser to have increased confidence in their ability to rely on the ABT program for compliance. Consequently, beginning June 1, 2005 we will allow refineries to generate credits for any volume of highway diesel fuel produced which meets the 15 ppm cap. Any refiner that chooses to do so may bank these credits for later use during the compliance option years, or may trade them to other refineries within the same PADD for use during the compliance option years. The one restriction placed on the generation of these credits is that refiners will have to demonstrate that the 15 ppm fuel produced early is segregated in the distribution system and not commingled with current 500 ppm sulfur fuel. Only that volume that the refiner verifies was actually sold as 15 ppm fuel at retail or into centrally-fueled fleets will be eligible for early credits.

Providing refiners with an incentive to produce diesel fuel complying with the 15 ppm cap earlier than required will not only instill confidence in the ABT program under the temporary compliance option, but will also provide both refiners and the distribution system the opportunity to gain valuable experience prior to the start of the program with producing and distributing fuel meeting the 15 ppm cap. We believe that allowing early credit generation for one year prior to the start of the program will provide the opportunity for the generation of sufficient early credits to provide refiners with the program implementation flexibility they will need. If we allowed early credits to be generated in this manner for a longer time period, we are concerned that the significant amounts of early credits that could be generated could compromise availability of 15 ppm fuel at the startup of the program. Use of these credits after June 1, 2006 could affect the availability of low sulfur highway diesel fuel across the country when the 2007 model year heavy-duty engines are introduced in the market, because the amount of 500 ppm fuel could significantly exceed the 20 percent threshold allowed under our temporary compliance option.

The only situation in which we will allow for the generation of credits prior to June 1, 2005 is if a refiner demonstrates that the fuel will be used in vehicles certified to meet the 2007 particulate matter standard being adopted today for heavy-duty engines (0.01 g/bhp-hr) or in vehicles with retrofit technologies that achieve emission levels equivalent to the 2007 NO_X or PM standard verified as part of a retrofit program administered by EPA or a state. (Refer to section I.C.7 for more discussion on retrofit programs.) Under this situation, we will have confidence that emission benefits are in fact accruing early, along with the fuel sulfur credits. The early credit provision of this fuel program will complement the provisions that encourage the

introduction of cleaner vehicles earlier than the 2007 model year, as discussed in Section III.D.

b. Using Credits

If a refinery does not meet the 80 percent minimum requirement for low sulfur highway diesel fuel with actual production at that refinery, the refinery will be able to use credits to demonstrate compliance with the 80 percent requirement. The use of credits is limited to credits generated by refineries within the same PADD (within the limits noted below for California, Alaska, Hawaii, and any state with an EPA-approved waiver from the federal program). Under the temporary compliance option, for every gallon of 500 ppm sulfur fuel produced by a refinery that exceeds the maximum allowed limit of 20 percent, the refinery must obtain one credit from another refinery within the same PADD or use banked credits (that were generated within the same PADD).

Although credits will not officially exist until the end of the calendar year (based on the generating refinery's actual low sulfur fuel production for that calendar year), refineries may contract with each other for credit sales prior to the end of the year, based on anticipated production. The actual trading of credits will not take place until the end of the year. All credit transfer transactions will have to be concluded by the last day of February after the close of the annual compliance period and each refinery must submit documentation (as described in Section VII.E.) demonstrating compliance with the appropriate volume of low sulfur highway diesel fuel. For example, a refinery that wishes to purchase credits from another refinery to comply with the 2007 required percentage of low sulfur fuel can do so based on the generating refinery's projections of low sulfur fuel production. By the end of February 2008, both the credit-purchasing refinery and the credit-selling refinery must reconcile the validity of the credits, and demonstrate compliance with the 80 percent requirement. As noted earlier, at the beginning of the program, the initial compliance period will begin on June 1, 2006 and end on December 31, 2006. For this initial period, refineries must submit documentation, by February 28, 2007, demonstrating compliance with the appropriate levels of low sulfur highway diesel fuel for the period between June 1, 2006 and December 31, 2006.

Because there could be situations where a refinery planning to use credits to comply with the minimum percentage of fuel required comes up short at the end of the year, we are adopting provisions that allow a limited amount of carryover, or ''credit deficits.'' A refinery that does not meet the required percentage of low sulfur fuel production in a given year will be allowed to carry forward a credit deficit for one year, as long as the deficit does not exceed five percent of its annual highway diesel fuel production. However, the refinery will have to make up the credit deficit and come into compliance with the required low sulfur production percentage in the next calendar year, or the refinery will be in violation of the program requirements. This provision is intended to give some relief to refineries faced with an unexpected shutdown or that otherwise are unable to obtain sufficient credits to meet the required percentage of low sulfur fuel production.

With regard to credit trading, any person can act as a broker in facilitating credit transactions, whether or not such person is a refiner and/or importer, so long as the title to the credits are transferred directly from the refinery generating the credits to the refinery purchasing the credits. Whether credits are transferred directly from the generating refinery to the purchasing refinery, or through a broker, the refinery purchasing the credits should have sufficient information to fully assess the likelihood that credits are valid. Any credits that are traded to another refinery may, in turn, be traded to another refinery; however, the credits cannot be traded more than twice. We believe this provision is necessary because repeated transfers of credits would significantly reduce our ability to verify the validity of credits.

c. How Long Will Credits Last?

The goal of the ABT provisions is to provide additional flexibility to refiners in the early years of the low sulfur diesel fuel program. After the first few years of the program, there will be a significantly greater proportion of after-treatment-equipped vehicles in the fleet. It will be important to ensure a full transition to the new low sulfur fuel to prevent misfueling of those vehicles and preserve the environmental benefits of the program. Therefore, the ability of refineries to generate credits will end on December 31, 2009. Refineries will be allowed to use any available banked credits, including early credits, for fuel produced through May 31, 2010. Any remaining credits not used for the compliance period until May 31, 2010 will expire. Beginning June 1, 2010, all refineries must produce 100 percent of their highway diesel fuel at the 15 ppm sulfur level without the use of credits, and the ABT program will end.

d. Additional Limitations on Credit Trading for Some States

At this time we are adopting a low sulfur highway diesel fuel program that will apply throughout the United States, with trading of credits limited to those refineries located within the same PADD. Although we are adopting a diesel fuel program that currently will apply nationwide, it is possible that the State of California, or some other state, may adopt in the future a different highway diesel fuel program than that adopted today.[163] To assure that adequate supplies of low sulfur diesel fuel will be available throughout all regions of the country, we are adopting provisions that do not allow refineries located in states with a state-approved 15 ppm highway diesel sulfur program to participate in the credit program. In other words, credit trading is limited only to those refineries complying with the federal program. For example, without such provisions, if California were to adopt its own state program requiring the production of 15 ppm diesel fuel, we are concerned that it might be possible for California refineries to generate enough credits such that areas outside of California in PADD V are dominated by the production of 500 ppm sulfur diesel fuel, with little or no 15 ppm fuel available. This would be problematic for the model year 2007 and later heavy-duty engines designed to be operated on low sulfur fuel. The reader is directed to Chapter IV of the RIA for today's action for our complete analysis supporting the development of the temporary compliance option.

As discussed in Section IV.F. of this preamble, the State of Alaska, which is a part of PADD V, will have the opportunity to develop, and submit to us for approval, an alternative transition plan for implementing the low sulfur highway diesel fuel program. Such a plan will allow Alaska to develop a transition program tailored to its isolated market. If, for some reason, Alaska does not submit an alternative plan, or we do not approve the plan submitted by Alaska, then the federal program described in today's action will apply. In the event we do not approve an alternative plan for Alaska, based on our analysis of the likely response of refineries in Alaska to the temporary compliance option and because its fuel distribution system is essentially isolated from the rest of PADD V, we are

[163] See Section IV.F. for a discussion of preemption of state diesel sulfur requirements.

concerned that all of the fuel offered for sale in Alaska could be 500 ppm sulfur fuel if refineries in Alaska were allowed to purchase credits from other PADD V refineries. For this reason, under today's program, refineries in Alaska will be allowed to generate credits as described earlier. However, they may only sell credits to, or purchase credits from, other refineries in or importers of fuel to Alaska. We believe this will provide assurance that low sulfur highway diesel fuel will be sufficiently available in Alaska and will also reduce the chance that credits from Alaska will result in significantly less low sulfur diesel fuel in PADD V areas outside of Alaska. Again, these default provisions of the national program will only be effective in the event that we do not approve an alternate transition plan for Alaska.

Hawaii is in a similar situation to Alaska with regard to fuel distribution. Hawaii, which is part of PADD V, is an isolated market and we have similar concerns with regard to whether low sulfur diesel fuel would be available in Hawaii if the two refineries currently operating were able to purchase credits from other PADD V refineries and produce all 500 ppm sulfur fuel. For this reason, under today's program, the refineries in Hawaii will be allowed to generate credits as described earlier. However, they may only sell credits to, or purchase credits from, other refineries in or importers of fuel to Hawaii. We believe this will ensure that low sulfur highway diesel fuel will be available in Hawaii.

3. What Information Must Refiners/Importers Submit to Us?

To ensure a smooth transition to the program and to evaluate compliance once the program has begun, we are requiring refiners and importers to submit a variety of information to us. Section VII.E of this document and the regulatory language for today's action provide detailed description of the information that must be submitted and the dates when such submittals are due.[164]

First, refiners and importers that currently or in 2006 expect to produce or supply highway diesel fuel are required to register with us by December 31, 2001. This will inform us on the universe of refiners that we expect to participate in the highway diesel market once the program begins.

Second, to help facilitate the market for credit trading under the temporary compliance option, any refiner or importer planning to produce or import highway diesel in 2006, is required to submit to us an annual pre-compliance report. Refiners and importers are required to submit these annual pre-compliance reports from 2003 through 2005. These reports must contain estimates of the volumes of 15 ppm sulfur fuel and 500 ppm sulfur fuel that will be produced at each refinery, and, for those refineries planning to participate in the trading program, a projection of how many credits will be generated or must be used by each refinery. These pre-compliance reports must also contain information outlining each refinery's timeline for compliance and provide information regarding engineering plans (e.g., design and construction), the status of obtaining any necessary permits, and capital commitments for making the necessary modifications to produce low sulfur highway diesel fuel. Based on the information submitted by refiners and importers, we plan to issue an annual report that summarizes, in a way that protects the confidentiality of individual refiners and importers, the information contained in the pre-compliance reports. Our annual report will provide information, summarized and aggregated on a PADD basis, describing the volumes of 15 ppm and 500 ppm highway diesel planned to be produced, and estimates of the number of credits that refineries expect to generate or use. We believe this information will be important to refiners as they make plans for complying with the temporary compliance option. For example, this information will be useful in giving refiners a better indication of the potential market for credits and availability of credits in their PADD. To prevent the release of confidential information, our annual report will not contain any information on individual refinery compliance plans.

Third, refiners and importers are required to submit annual compliance reports that demonstrate compliance with the requirements of this final rule. The first annual compliance report is due by the end of February 2007 (for the period of June 1, 2006 through December 31, 2006) and is required annually through February 2011. The reports must show, on a refinery basis, the volumes of 15 ppm and 500 ppm sulfur highway diesel fuel produced at each refinery during the compliance period, the number of credits used (or generated) at each refinery to demonstrate compliance with the 80 percent requirement for low sulfur diesel fuel, and the sources of the credits used. The information submitted in the annual compliance reports must be segregated by PADD.

4. Impacts of the Highway Diesel Fuel Program

Based on analyses we have performed, as described in more detail below, we believe the temporary compliance provisions contained in today's final rule will assure adequate supplies of highway diesel fuel, will provide flexibility for refiners, and should result in lower costs for both refiners and consumers. In addition, we believe the temporary compliance provisions as adopted today will ensure sufficient availability of low sulfur highway diesel fuel to new vehicle owners who need it without the need for a retailer availability requirement, and should not lead to significant levels of misfueling and the associated loss of emission benefits. We have analyzed each of these issues in developing the final fuel program. A summary of our analyses and the conclusions we have drawn are discussed below. A detailed description of these analyses are contained in the RIA for today's action. In addition, a complete list of the comments related to a possible phase-in program and our response to those comments is included in the Response to Comments document for this final rule.

a. Ensures Adequate Supplies of Highway Diesel Fuel

We received several comments on the NPRM fuel program that suggested there would be a shortfall in the amount of highway diesel supply if all of the highway diesel fuel were required to meet a 15 ppm sulfur limit beginning in 2006. As described later in Section V.C., in response to these comments we analyzed the capability of the entire diesel fuel refining industry in the U.S. to adjust to the low sulfur fuel requirements. Based on this analysis, we believe that supplies of highway diesel fuel will be sufficient even if all highway diesel fuel were required to comply with the 15 ppm standard in 2006. The temporary compliance option included in today's rule is intended as a ''safety valve'' that, along with the hardship provisions discussed in Section IV.C.,will further help to ensure adequate supplies of highway diesel fuel beginning in 2006.

In performing the analysis of diesel fuel supply, we examined all diesel fuel refiners (including those that currently make only off-highway diesel fuel but not highway diesel fuel) to assess the likelihood of their investing in the production of 15 ppm highway diesel

[164] As described in Sections IV.B., IV.C. and VII.E., small refiners and GPA refiners have special supplementary reporting requirements relating to the optional program they are participating in.

fuel. Using a refinery cost model, we made projections of the likely response by refineries to today's low sulfur requirements by estimating the cost for each refinery to produce low sulfur diesel fuel. The results of our analysis show that the overall supply of highway diesel fuel will continue to be adequate to meet market demands as refiners are required to start producing low sulfur highway diesel fuel. Most refineries that currently produce highway diesel fuel will produce about the same volume of low sulfur diesel fuel once the program takes effect. However, several refineries could economically expand their current highway diesel fuel production by shifting some of their off-highway production today, and a few others currently producing only off-highway diesel fuel could economically shift to some highway diesel production. Consequently, our analysis indicates that there is ample capability in the refining industry to continue to economically supply sufficient quantities of highway diesel fuel when today's program goes into effect. For a fuller discussion of this analysis, see Section V of this preamble and Chapter IV of the RIA.

If any potential for highway diesel fuel shortfalls exists by requiring all fuel to meet 15 ppm sulfur in 2006, as CRA's analysis suggests, we believe that allowing some continued supply of 500 ppm, as we are doing under the temporary compliance option and hardship provisions contained in today's action, addresses this concern. Since the final rule allows some transition period before the entire highway diesel pool is required to meet the 15 ppm sulfur standard, some refiners will not need to change their current operations and will be able to continue producing 500 ppm fuel during these years. Those refiners that delay production of low sulfur diesel fuel until the later years of the program will tend to be the refiners with the highest cost to comply and, thus, refiners that would otherwise have the greatest tendency not to invest and thereby impact supply. Refiners that begin producing low sulfur diesel fuel in the later years of the program will also be able to take advantage of ongoing improvements in desulfurization technology. Together, these factors will help avoid or reduce any potential losses in highway diesel fuel production when the program requires full compliance with low sulfur diesel fuel.

b. Ensures Widespread Availability of Low Sulfur Diesel Fuel

A major concern we noted in the NPRM regarding a fuel phase-in program was ensuring the widespread availability of low sulfur diesel fuel. Without an assurance of widespread availability, there would be concerns whether the 2007 and later model year heavy-duty vehicles that were designed to operate on low sulfur fuel would be able to purchase it in all parts of the country. If such vehicles were fueled with 500 ppm diesel fuel, the emission control systems could be irreversibly damaged and any benefit of the new emission standards could be eliminated (see Section III.F. above). Therefore, in setting the requirements for the temporary compliance option, we have analyzed the likelihood that fuel will be widely available so that 2007 and later model year heavy-duty vehicles will be able to find low sulfur fuel in all local markets across the country. To achieve this goal, we believe there need to be assurances that refineries producing 15 ppm fuel are sufficiently scattered throughout each of the PADDs and that most pipelines will carry 15 ppm fuel (either as the only highway diesel fuel or in addition to 500 ppm highway fuel).

In determining what fraction of highway diesel fuel would need to be low sulfur under the temporary compliance option provision, taking into account the potential impact of the hardship provisions, we used a refinery cost model to estimate the costs of producing 15 ppm fuel for all refineries. We then assumed that the refineries with the lowest costs would convert to 15 ppm fuel and assumed the other refineries would purchase credits and continue producing 500 ppm fuel through the compliance option period. We then overlaid the information on which refineries were estimated to be producing 15 ppm fuel with the highway diesel fuel distribution system in the United States. We examined different levels for the temporary compliance option beginning as low as 20 percent and ranging as high as 90 percent. The results of the analysis show that at temporary compliance option levels for 15 ppm below 80 percent, there are local regions of the country where we believe there would likely be shortages of low sulfur diesel fuel. The areas where we believe there would be shortages are either (1) served by pipelines that we believe would not carry 15 ppm fuel, because the refineries serving those pipelines are projected to produce primarily 500 ppm; or (2) dominated by refineries we believe would continue producing 500 ppm fuel under the temporary compliance option and are not currently capable of receiving significant supplies of a second grade of diesel fuel through other reasonable means. At the 80 percent level, we believe that all pipelines will carry low sulfur diesel fuel, since there are a sufficient number of refineries scattered across the country producing low sulfur diesel fuel and at sufficient volumes for pipelines to choose to carry it. We also believe that the program ensures that low sulfur diesel fuel will be sufficiently available to retail outlets at a reasonable cost either at a local terminal or by trucking the fuel a limited distance.

As noted earlier, we are not adopting any retailer availability requirements with today's fuel program. Given the amount of low sulfur diesel fuel required under today's temporary compliance option, we believe the distribution system will make low sulfur diesel fuel widely available without any requirements on retail outlets to supply low sulfur diesel fuel.

c. Provides Lower Costs to Refineries

One benefit of the temporary compliance option being adopted today is that a significant number of refiners will have the ability to delay the date when they convert their highway diesel fuel production to 15 ppm, allowing the refining industry to stretch out its engineering and construction resources. Given the flexibilities being adopted today, we believe that many large refineries, and other refineries for which diesel desulfurization is least expensive, will make the commitment to convert their entire highway diesel pool to 15 ppm sulfur in 2006 and sell credits to other refineries that will continue to produce all of their fuel at the 500 ppm sulfur level. Using a refinery cost model to estimate how refineries will respond to the temporary compliance option requirements, we believe that more than half of the refineries will delay capital investment by buying credits and continue producing 500 ppm sulfur diesel fuel under the temporary compliance option and small refiner hardship provisions. We estimate that refiners will be able to save as much as $1.7 billion over the transition period compared to a requirement that all highway diesel fuel comply with 15 ppm sulfur in 2006. As noted earlier, much of this potential savings will be offset by increased costs in the distribution system. Nevertheless, we project that in total, an overall savings of approximately $0.65 billion could result.

d. Misfueling Concerns Should Be Minimized

By allowing a 500 ppm and 15 ppm sulfur highway diesel fuels to be in the

market at the same time, there is the possibility that model year 2007 and later heavy-duty vehicles will be misfueled with 500 ppm sulfur fuel, either accidentally or intentionally. As discussed above, if such vehicles are fueled with 500 ppm diesel fuel, the emission control systems could be irreversibly damaged and any benefit of the new emission standards could be eliminated. To minimize the possibility of misfueling, we are adopting labeling requirements that apply to both retail stations and vehicle manufacturers. Under these provisions, labels will be applied at the diesel fuel pumps at retail stations and at the fuel tank inlet on the vehicle. The labels must indicate that only 15 ppm sulfur highway diesel fuel may be used in 2007 and later model year heavy-duty vehicles. The labeling requirements for fuel pumps and vehicles are described in detail in Sections VII.C. and VI.G., respectively.

Given the program being adopted today, we believe that intentional misfueling will not be a serious problem. The main incentive vehicle owners may have for using 500 ppm sulfur fuel would likely be cost savings. In general, producing 500 ppm sulfur should be cheaper than producing 15 ppm fuel. However, given the requirements adopted today, we believe there should not be a large cost differential between the 15 ppm sulfur fuel and the 500 ppm sulfur fuel at retail outlets. Under the credit trading program, to produce 500 ppm fuel, most refiners will have to purchase credits from other refiners producing 15 ppm fuel, increasing the cost of the 500 ppm fuel, while decreasing the cost of the 15 ppm fuel. At the refinery gate, the cost of both fuels should be approximately the same. In addition, given the amount of 15 ppm fuel required under the temporary compliance option, 15 ppm fuel will be distributed through essentially the entire pipeline system. The distribution of 500 ppm fuel, on the other hand, will be more limited, due to its much lower volume. We expect that the 500 ppm fuel will be distributed by truck in the areas nearby refineries producing this fuel and through a few major pipelines to a limited number of major fuel consuming areas. Overall, the better economies of scale of transporting 15 ppm fuel should compensate for any additional handling cost due to the need to more carefully avoid contamination with higher sulfur fuels. For these reasons, we expect the price to consumers of 500 ppm sulfur fuel to be generally close to that of 15 ppm sulfur fuel and, therefore, there should not be a significant economic incentive to misfuel with 500 ppm sulfur fuel. Finally, because vehicle owners will likely void the manufacturer's warranty if they misfuel with 500 ppm sulfur fuel, they will have an additional incentive not to misfuel. Owners of heavy-duty vehicles make significant investments in these vehicles and will not want to take the chance of voiding their warranty for a relatively small savings in fuel cost.

In addition to our concern about intentional misfueling, we also have some concerns about accidental misfueling during the optional compliance program years. This concern is lessened to some extent because of the limited amount of 500 ppm sulfur fuel that will be available, the short duration of the optional compliance program, the knowledgeable owners and operators of trucks and most importantly, the labels that will be required on both the vehicle and the fuel pumps. Thus, we do not expect either type of misfueling to be a significant problem.

e. Summary

In summary, today's program has been structured to ensure a smooth transition to low sulfur highway diesel fuel. We believe this will allow the refining industry the ability to spread out capital investments and provide more time for the market to transition to the low sulfur diesel fuel. This, in turn, will help to mitigate any potential for concerns about highway diesel fuel supply shortfalls. We also believe the provisions included in the program will continue to provide assurance that adequate supplies of low sulfur highway diesel fuel will be available throughout the nation for the 2007 and later model year heavy-duty vehicles that will require the fuel to comply with the emission standards. Moreover, because the flexibilities included in the program should reduce the economic impact on refiners, we will also expect there to be a reduction in the costs to highway diesel fuel users.

B. What Provisions Apply in the Geographic Phase-in Area?

1. What Is the Geographic Phase-in Area and How Was it Established?

In the low sulfur gasoline rule, we established the GPA provision which provides temporarily less stringent standards for gasoline sold in certain parts of the West and Alaska (40 CFR 80.215). A map of the area is shown in Figure IV–2, below.[165] As described in the preamble to the low sulfur gasoline final rule, we used two criteria to develop and evaluate the GPA approach: (1) Relative environmental need and (2) the ability of U.S. refiners and the distribution system to provide compliant gasoline.

BILLING CODE 6560–50–P

[165] Alaska, Colorado, Idaho, Montana, New Mexico, North Dakota, Utah, and Wyoming. Note that minor changes to this area are currently under consideration. Any such changes subsequent to today's rule are intended to be carried over into today's rule as well.

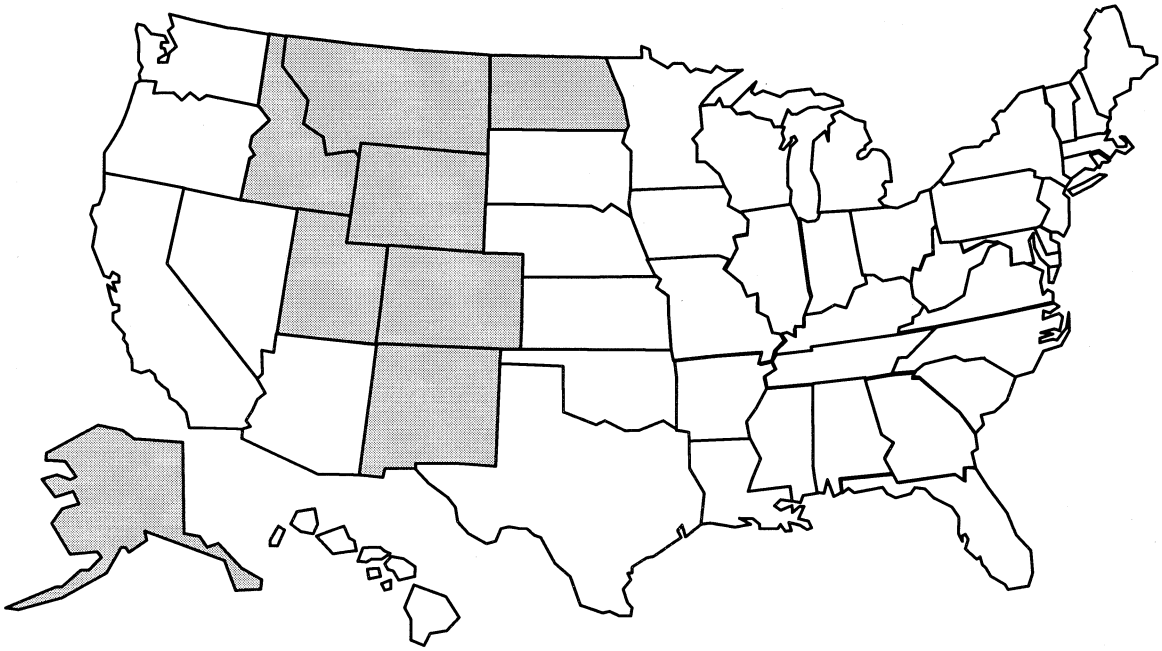

Figure IV-2. Geographic Phase-in Area

BILLING CODE 6560–50–C

In part, we defined the GPA based on the relative difficulty of producing or obtaining complying low sulfur gasoline (see preamble to the low sulfur gasoline rule at 65 FR 6698, February 10, 2000). The refining industry in the GPA is dominated by small capacity, geographically-isolated refineries located within that area. As a general rule, refineries in this area will (because of their crude oil capacity, corporate size, and location) have the most difficult time of all refineries nationwide in competing for the engineering and construction resources needed to modify their refineries to comply with the low sulfur gasoline standards.

Furthermore, an assessment of gasoline production and use data and information on the products pipeline system shows that states and counties in the GPA are solely or predominantly dependent on gasoline produced by these refineries and have limited or no access to gasoline from other parts of the country. Specifically, Department of Energy data for 1998 indicate that over 80 percent of the gasoline sold in this area is produced by the relatively small refineries located within the region. Much of this gasoline is produced by small volume refineries that are not owned by small businesses, and are therefore not afforded the flexibility of the small refiner provisions described in Section IV.C. Providing low sulfur gasoline to these states and counties is expected to be more difficult and costly in the near term.

The temporary gasoline provisions for the GPA apply for three years, 2004 through 2006. Since the low sulfur gasoline standards for the rest of the country require compliance in January 2006 with a 30 ppm refinery average standard and an 80 ppm gallon cap, the geographic phase-in provides an additional year for refiners to reach those standards. This extra year and the somewhat less stringent standards during the gasoline phase-in will provide the refining industry the opportunity for a more orderly transition to the 30/80 ppm gasoline sulfur standards by January 2007.

The gasoline GPA provision covers all gasoline produced (or imported) for use in the GPA[166], whether refined within the area or distributed within the area via pipeline, barge, truck, or rail. Foreign refiners are involved in this program through importers, which are the regulated entities.

2. *Highway Diesel Provisions for GPA Refiners*

In response to our proposal, we received many comments from the refining industry and others regarding the timing of our proposed highway diesel fuel sulfur program. Commenters argued that the proposed schedule for diesel sulfur compliance, beginning in mid-2006, would be a problem since it directly coincides with the December 2006 gasoline sulfur compliance date for the GPA. Some said that the timing of the diesel program could effectively negate the benefit to refiners of the GPA program since desulfurization investments would need to take place during essentially the same time period. This could thus increase the difficulty of refiners in this region to raise capital and to engage engineering and construction resources. Some also said that an extension of the GPA gasoline program would allow more rational planning without unduly reducing the air quality benefits of the program.

We agree with many of the commenters in this regard—refineries supplying the GPA tend to be disproportionately challenged compared to other refiners with respect to capital formation, the availability of engineering and construction resources, and the isolated nature of many of the markets. Moreover, the introduction of low sulfur highway diesel fuel in June 2006 indeed overlaps with the conclusion of the interim low sulfur gasoline standards for GPA refiners.

In consideration of these comments, we believe that it is appropriate to grant additional flexibility to refiners that supply gasoline to the GPA while also meeting the low sulfur diesel standards. Additional flexibility for GPA refiners will allow them to spread out their capital investments for producing low sulfur gasoline and highway diesel fuel. In light of the above, we are modifying

[166] As stated in the Tier 2/Gasoline Sulfur final rule (See § 80.215(a)(2)), we plan to expand the GPA to include counties and tribal lands in states adjacent to the eight core GPA states.

the GPA gasoline program while still achieving significant environmental benefits. We expect this provision will have little long-term impact on the environmental benefits of the Tier 2/ Gasoline Sulfur program, while providing for considerable near-term implementation flexibility and improved feasibility of the highway diesel fuel program.

Refiners that produce both gasoline and highway diesel fuel and are subject to the GPA gasoline sulfur program may choose to stagger their desulfurization investments for the two fuels. Refiners that comply with the low sulfur diesel fuel standard by June 1, 2006 for all of their highway diesel fuel production may receive a two-year extension of their interim GPA gasoline standards for 2006, that is through December 31, 2008. In addition to allowing refiners the opportunity to spread out their desulfurization investments, we believe this provision will encourage the production of 15 ppm diesel fuel by some refiners producing fuel for the GPA, which will further help to ensure the new fuel is widely available for new vehicles throughout the area. Although the GPA gasoline program applies to both refiners and importers, the extension of the GPA gasoline program under today's program applies only to refiners. This reflects the fact that only refiners have to make capital investments to comply with the diesel sulfur standard.

To receive the two-year extension of the GPA standards, a U.S. refinery must by June 1, 2006 produce 100 percent of its highway diesel fuel at 15 ppm sulfur (including refineries that supply only a fraction of their gasoline production to the GPA). In addition, the refinery must maintain a production volume of 15 ppm highway diesel fuel that is at least 85 percent of the baseline highway diesel volume that was produced at that refinery on average during calendar years 1998 and 1999. We believe that it is very important that the extension of a GPA refinery's interim gasoline sulfur standard be linked to a substantial environmental benefit from the production of 15 ppm diesel fuel in 2006. We have established a minimum volume requirement to prevent the extension of the GPA gasoline program from applying in situations where a refinery changes its refinery product slate to produce very little highway diesel fuel—even though this production is at 15 ppm sulfur. We believe the 85 percent level is sufficient to reflect a substantial investment in desulfurization technology. At the same time the 85 percent level should allow for any reasonable variation in production of highway diesel fuel that would be expected to occur in typical situations between now and 2006, particularly given the continued growth of the highway diesel market.

Similarly, a foreign refinery that meets the same conditions as a domestic GPA refiner may also sell gasoline into the GPA that meets a less stringent sulfur standard during 2007 and 2008.[167] That is, a foreign refinery that by June 1, 2006 sells 100 percent of the highway diesel fuel it imports into the U.S. as 15 ppm fuel (and that maintains the 85 percent of baseline volume requirement) may sell somewhat higher-sulfur gasoline into the GPA in 2007 and 2008. The actual gasoline sulfur standard during this period, as with domestic refiners, would be based on the foreign refinery's gasoline sulfur baseline.

If a situation arises where a GPA refinery did not produce highway diesel fuel in 1998 or 1999 but later begins to produce 15 ppm diesel fuel, use of the GPA gasoline phase-in extension will require case-by-case EPA approval. In its application for such approval, a refinery must show us that the loss of emission reductions will not be significant and must propose an appropriate minimum production volume. In evaluating such a proposed minimum volume, we may consider, among other factors, the typical ratio between highway diesel and gasoline production for other refineries in the industry. Again, the reason for the two-year extension of the gasoline interim program is to allow the GPA refinery to spread out its capital investments while increasing the quantity of 15 ppm fuel being produced. We expect that GPA refineries using this option will make a substantive capital investment in diesel desulfurization and have thus set this minimum 15 ppm diesel production volume limit.

Since refiners participating in this program are required to produce 100 percent of their highway diesel at 15 ppm, those that choose this option cannot participate in the highway diesel temporary compliance option, and, therefore, are not permitted to generate credits on the low sulfur diesel fuel that they produce. If, after June 1, 2006, a foreign refinery is not producing 100 percent of its highway diesel fuel imported into the U.S. at 15 ppm sulfur in the required volume, it forfeits the two-year extension or any remaining portion of the extension of its interim gasoline program.

3. *How Do Refiners Apply for an Extension of the GPA Gasoline Program?*

Any refinery that seeks an extension of its GPA gasoline standards must apply to us as a part of its registration, due by December 31, 2001. In this application, the refinery must indicate its intention to produce 100 percent of its highway diesel fuel at 15 ppm (and at a volume at least 85 percent of the highway diesel fuel volume it produced on average during calendar years 1998 and 1999) by June 1, 2006.

4. *Required Reporting for GPA Refiners*

As described in Section VII.E below, refiners that plan to use the extension of the GPA gasoline standard must report their plans and progress several times over the course of the program. In addition to their initial registration and application discussed above, a refinery must submit pre-compliance reports in 2003, 2004, and 2005, describing its progress toward the capacity to produce 100 percent of its highway diesel fuel at 15 ppm sulfur (at a volume at least 85 percent of its baseline volume). Then, by July 1, 2006, such a refinery must confirm to us that by June 1, 2006 it was producing 100 percent of its highway diesel fuel at 15 ppm, at the appropriate volume.[168] After the diesel sulfur program is underway in 2006, the refinery must provide us with annual compliance reports by the end of February of 2007, 2008, and 2009 (i.e., until after the end of the extended interim gasoline sulfur program for GPA refiners on December 31, 2008).

C. Hardship Provisions for Qualifying Refiners

This section describes various provisions for certain qualifying refiners, both domestic and foreign, that may face hardship circumstances.

1. *Hardship Provisions for Qualifying Small Refiners*

In developing our diesel sulfur program, we evaluated the need and the ability of refiners to meet the 15 ppm standard as expeditiously as possible. This analysis is described in detail in Chapter IV of the RIA. As a part of this analysis, we found that while the majority of refiners would be able to meet the needed air quality goals in the

[167] Prior to 2007, foreign refiners can participate in the GPA program through importers. Under today's provisions for 2007 and 2008, importers are not eligible and foreign refiners can participate directly as refiners.

[168] If the refiner was not producing 15 ppm fuel for all its highway diesel production at that refinery by June 1, 2006, the July 1, 2006 letter must confirm that the refiner is forfeiting the ''automatic'' two-year extension of that refinery's interim gasoline program.

2006 time frame, there would be some refiners that would face particularly challenging circumstances which would cause them to have more difficulty, in comparison to the industry as a whole, in meeting the standards.

We believe it is feasible and necessary for the vast majority of the program to be implemented reasonably quickly to achieve the air quality benefits as soon as possible. To do otherwise would be to base the time frame of the entire program on the lowest common denominator. Thus, we have provided special flexibility provisions for a subset of refiners that qualify as ''small refiners,'' which represent about five percent of the overall highway diesel volume. As described in more detail below, and in the Regulatory Impact Analysis (Chapter VIII of the RIA), we concluded that refineries owned by small businesses face unique hardship circumstances, compared to larger companies.

a. Qualifying Small Refiners

The primary reason for special small refiner provisions is that small businesses generally lack the resources available to large companies which enable the large companies (including those large companies that own small volume refineries) to raise capital for investing in desulfurization equipment. The small businesses are also likely to have more difficulty in securing loans, competing for engineering resources, and completing construction of the needed desulfurization equipment in time to meet the standards adopted today which begin in 2006. In addition, the implementation of the low sulfur diesel program will occur in the same general time frame as the implementation of the low sulfur gasoline program, since most of those small refiners that are covered by the interim standards under the Tier 2/Gasoline Sulfur program (40 CFR Part 80, Subpart H) are also covered by today's diesel fuel sulfur program.

The emissions benefits of the low sulfur diesel program are needed as soon as possible—to allow the implementation of new emission reduction requirements on heavy-duty engines and vehicles and, thus, to reduce ozone, particulate matter, and other harmful air pollutants. Since our analysis showed that small businesses in particular face hardship circumstances, we are adopting temporary provisions that will provide refineries owned by small businesses additional time to meet the ultimate 15 ppm sulfur cap or balance investments of this program with those related to the Tier 2/Gasoline Sulfur program. This approach allows us to achieve the earliest implementation date for advanced technology diesel vehicles (i.e., the 2007 model year) and the needed emission reductions they will bring.

We believe that the temporary flexibilities described below are an effective way to begin the broad implementation of the standards as expeditiously as is feasible and thereby achieve significant air quality benefits in an expeditious manner. This section describes the special provisions we are offering small businesses to mitigate the impacts of our program on them and generally explains the analysis we undertook of those impacts. Please refer to the Response to Comments document for a detailed discussion of comments we received on these provisions, and to the RIA for a more detailed discussion of our analysis of small refiner circumstances.

As explained in the discussion of our compliance with the Regulatory Flexibility Act in Section X.B. and in the Regulatory Flexibility Analysis in Chapter VIII of the RIA, we considered the impacts of our proposed regulations on small businesses. We have historically, as a matter of practice, considered the potential impacts of our regulations on small businesses. We believe that the temporary flexibilities we are adopting for small refiners contributed to our development of a framework to achieve significant environmental benefits from lower sulfur diesel in the most expeditious manner that is reasonably practicable.

A large part of the analysis of small business impacts conducted for this rulemaking was performed in conjunction with a Small Business Advocacy Review (SBAR) Panel we convened, pursuant to the Regulatory Flexibility Act as amended by the Small Business Regulatory Enforcement Fairness Act of 1996 (SBREFA). In the SBREFA amendments, Congress stated that ''uniform Federal regulatory requirements have in numerous instances imposed unnecessary and disproportionately burdensome demands including legal, accounting, and consulting costs upon small businesses . . . with limited resources[,]'' and directed agencies to consider the impacts of certain actions on small entities. The final report of the Panel is available in the docket. Through the SBREFA process, the Panel provided information and recommendations regarding:

- The significant economic impact of the proposed rule on small entities;
- Any significant alternatives to the proposed rule which would ensure that the objectives of the proposal were accomplished while minimizing the economic impact of the proposed rule on small entities;
- The projected reporting, recordkeeping, and other compliance requirements of the proposed rule; and,
- Other relevant federal rules that may duplicate, overlap, or conflict with the proposed rule.

In addition to our participation in the SBREFA process, we conducted our own outreach, fact-finding, and analysis of the potential impacts of our regulations on small businesses. Some of the small refiners with whom we and the Panel met indicated their belief that their businesses may close due to the substantial costs, capital and other impacts of meeting the 15 ppm diesel fuel standard without either additional time or flexibility with respect to gasoline sulfur compliance. Based on these discussions and analyses, the Panel and we agree that small refiners would likely experience a significant and disproportionate financial hardship in reaching the objectives of our diesel fuel sulfur program. However, the Panel also noted that the burden imposed upon the small refiners by our sulfur requirements varied from refiner to refiner and could not be alleviated with a single provision. We agree with the Panel and are offering qualifying small refiners three options to choose from in moving toward compliance with the low sulfur diesel fuel requirements.

For today's action, we have structured a selection of temporary flexibilities for qualifying small refiners, both domestic and foreign, based on the factors described below. Generally, we structured these provisions to address small refiner hardship while expeditiously achieving air quality benefits and ensuring that the low sulfur diesel fuel coincides with the introduction of 2007 model year diesel vehicles.

First, the compliance deadlines in the program, combined with flexibility for small refiners, will quickly achieve the air quality benefits of the program, while helping to ensure that small refiners will have adequate time to raise capital for new or revamped equipment. Most small refiners have limited additional sources of income beyond refinery earnings for financing the equipment necessary to produce low sulfur diesel. Because these small refiners typically do not have the financial backing that larger and generally more integrated companies have, they can benefit from additional time to secure capital financing from their lenders.

Second, we believe that allowing time for refinery sulfur-reduction technologies to be proven out by larger refiners before small refiners have to put them in place will reduce the risks incurred by small refiners that utilize these technologies to meet the standards. The added time will likely allow for lower costs of these improvements in desulfurization technology (e.g., better catalyst technology or lower-pressure hydrotreater technology). Because of the poorer economies of scale and the higher relative capital and operating costs faced by small refiners, more time for technology development and commercialization will limit the economic consequences for small refiners. Small refiners are disadvantaged by the economies of scale that exist for the larger refining companies-capital costs and per-barrel fixed operating costs are generally higher for small refiners.

Third, providing small refiners more time to comply will increase the availability of engineering and construction resources. Since most large and small refiners must install additional processing equipment to meet the sulfur requirements, there will be a tremendous amount of competition for technology services, engineering manpower, and construction management and labor. Our analysis shows that there are limits to the price elasticity of these resources. In addition, vendors will be more likely to contract their services with the major companies first, as their projects will offer larger profits for the vendors.

Finally, because the gasoline and diesel sulfur requirements will occur in approximately the same time frame, small refiners that produce both fuels will have a greater difficulty than most other refiners in securing the necessary financing. Hence, any effort that increases small refiners' ability to stagger investments for low sulfur gasoline and diesel will facilitate compliance with the two programs.

Providing these options to assist small refiners experiencing hardship circumstances enables us to go forward with the 15 ppm sulfur standard beginning in 2006. Without this flexibility, the benefits of the 15 ppm standard would possibly not be achieved as quickly. By providing temporary relief to those refiners that need additional time, we are able to adopt a program that expeditiously reduces diesel sulfur levels in feasible manner for the industry as a whole. In addition, we believe the volume of diesel that will be affected by this hardship provision is marginal. We estimate that small refiners contribute approximately five percent of all domestic diesel fuel production.

b. How Do We Define Small Refiners?

The following definition of small refiner is based closely on our small refiner definition in the Tier 2/Gasoline Sulfur rule. We define a refiner that meets both of the following criteria as a ''small refiner'' for purposes of this rule:

- No more than 1,500 employees corporate-wide, based on the average number of employees for all pay periods from January 1, 1999 to January 1, 2000.
- A corporate crude oil capacity less than or equal to 155,000 barrels per calendar day (bpcd) for 1999.

In determining the total number of employees and crude oil capacity, a refiner must include the number of employees and crude oil capacity of any subsidiary companies, any parent company and subsidiaries of the parent company, and any joint venture partners. We define a subsidiary of a company to mean any subsidiary in which the company has a 50 percent or greater ownership interest. This definition of small refiner is the same definition used under the recently promulgated Tier 2/Gasoline Sulfur program (40 CFR 80.225), except that we have included additional regulatory language to clarify our interpretation of the term ''subsidiary'' and we have updated the time period used to determine the employee number and crude oil capacity criteria to reflect data for the most recent calendar years. This approach is consistent with the Small Business Administration's regulations, which specify that, where the number of employees is used as a size standard, the size determination is to be based on the average number of employees for all pay periods during the preceding 12 months (13 CFR 121.106).

The gasoline sulfur standards and the diesel sulfur standards will impact small refiners in approximately the same time frame. For this reason, we will consider any refiner that we approve as meeting the small refiner definition under the gasoline sulfur program (40 CFR 80.235) to be a small refiner under the highway diesel sulfur rule as well without further demonstration.

In addition, a company that after January 1, 2000 either acquires or reactivates a refinery that was shutdown or non-operational between January 1, 1999 and January 1, 2000 may also apply for small refiner status. Such an application needs to be submitted to us no later than June 1, 2003. In this case, we will judge eligibility under the employment and crude oil capacity criteria based on the most recent 12 consecutive months unless data provided by the refiner indicates that another period of time is more appropriate. Companies with refineries built after January 1, 2000 are not eligible for the small refiner hardship provisions.

If a refiner with approved small refiner status later exceeds the 1,500 employee threshold or the corporate crude oil capacity of 155,000 bpcd without merger or acquisition, it may keep its small refiner status. This is to avoid stifling normal company growth and is subject to our finding that the company did not apply for and receive the small refiner status in bad faith. On the other hand, if a refiner with approved small refiner status later exceeds the small refiner criteria through merger or acquisition, its refineries must forfeit their small refiner status and begin complying with the national standards by January 1 of the next calendar year. For example, if a small refiner with two refineries purchases a third refinery in 2007 and that purchase causes the refiner to exceed the employee or corporate crude oil capacity thresholds for small refiner status, then that refiner must forgo its small refiner status and begin complying with the national standards by January 1, 2008 at all its refineries.

c. What Options Are Available for Small Refiners?

All refiners producing highway diesel fuel are able to take advantage of the temporary compliance option discussed in Section IV.A. Diesel producers that also market gasoline in the GPA may receive additional flexibility under today's rule (Section IV.B.). As an alternative, refiners that seek and are granted small refiner status may choose from the following three options under the diesel sulfur program. These three options have evolved from concepts on which we requested and received comment in the proposal. In most cases, we believe that small refiners will find these options preferable to either the broader diesel fuel temporary compliance option or the GPA provision discussed above.

500 ppm Option. A small refiner may continue to produce and sell diesel fuel meeting the current 500 ppm sulfur standard for four additional years, until May 31, 2010, provided that it reasonably ensures the existence of sufficient volumes of 15 ppm fuel in the marketing area(s) that it serves.

Small Refiner Credit Option. A small refiner that chooses to produce 15 ppm fuel prior to June 1, 2010 may generate and sell credits under the broader

temporary compliance option. Since a small refiner has no requirement to produce 15 ppm fuel under this option, any fuel it produces at or below 15 ppm sulfur will qualify for generating credits.

Diesel/Gasoline Compliance Date Option. For small refiners that are also subject to the Tier 2/Gasoline sulfur program (40 CFR Part 80, Subpart H), the refiner may choose to extend by three years the duration of its applicable interim gasoline standards, provided that it also produces all its highway diesel fuel at 15 ppm sulfur beginning June 1, 2006.

All refiners producing diesel fuel are required to provide us with basic data on their progress toward compliance in 2003–2005 under the pre-compliance reporting requirements described above in Section IV.A. As a part of their pre-compliance reports, small refiners must provide a limited amount of additional information specific to the option they choose. We discuss each option, and the special pre-compliance reporting requirements for each option, in the next paragraphs and in Section VII.E below.

i. 500 ppm Option

The 500 ppm option is available for any refiner that qualifies as a small refiner. Under this option, small refiners may continue selling highway diesel fuel with sulfur levels meeting the current 500 ppm standard for four additional years, provided that they supply information showing that sufficient alternate sources of 15 ppm diesel fuel in their market area will exist for fueling new heavy-duty highway vehicles. Under this option, small refiners may supply current 500 ppm highway diesel fuel to any markets for use only in vehicles with older (pre-2007) technology until May 31, 2010. In other words, small refiners that choose this option may delay production of highway diesel fuel meeting the 15 ppm standard for four years.

This 500 ppm option for small refiners is similar to the option provided to all refiners under the temporary compliance option described in Section IV.A above in that it allows a refiner to continue producing and selling the current 500 ppm fuel for a period of time. However, this option differs from the broader compliance option in that small refiners may produce and sell 100 percent of their highway fuel at 500 ppm without needing to buy credits. In contrast, under the broader temporary compliance option, refiners must buy credits to produce any volume of 500 ppm fuel over 20 percent of their total highway diesel production.

At the retail level, retailers will not be subject to any availability requirements and thus may sell 500 ppm fuel, 15 ppm highway fuel, or both (as is the case under the broader diesel temporary compliance option described in Section IV.A). All parties in the diesel fuel distribution system will have to maintain the segregation of 15 ppm fuel and 500 ppm fuel and only 15 ppm fuel may be sold for use in model year 2007 and later heavy-duty diesel vehicles.

As a part of their pre-compliance reporting due June 1, 2003 (see Section IV.A. above), any small refiners taking advantage of this 500 ppm option must show that sufficient sources of 15 ppm fuel will likely exist in the area served by the small refiner in the absence of production of 15 ppm fuel by that refiner.[169] A small refiner could approach this showing in different ways. For example, depending on the circumstances, the refiner might point to the presence of other refiners in the area that are expected to produce 15 ppm fuel, or to the refiner's proximity to a major pipeline that will be carrying 15 ppm fuel. Similarly, the refiner might show that its market share in the area's highway diesel market will be too small to significantly affect the volume of 15 ppm fuel regardless of the small refiner's actions.

Another approach could be to indicate practical steps that the refiner itself is prepared to take to help ensure that 15 ppm diesel fuel will be available. One commenter suggested a plan to add a separate tank and expand its fuel loading rack for handling 15 ppm diesel fuel that would be supplied by a different refiner—thus making low sulfur fuel available, at least at the wholesale level, at its refinery gate even though it produced no 15 ppm fuel.

Because of the wide distribution of 15 ppm fuel that we believe will occur under the industry-wide optional compliance program discussed in Section IV.A. above, we expect that few if any small refiners wishing to use the 500 ppm option will find it difficult to make the showing that 15 ppm fuel will exist in the area. If we do not take action on this showing within four months of receiving a refiner's 2003 pre-compliance report (i.e., by October 1, 2003 at the latest), the refiner's showing will be considered approved.

[169] If circumstances arise that cause the availability of 15 ppm fuel in the refiner's market area to decline, the refiner must provide a supplemental showing in its pre-compliance reports due in June 1, 2004 and/or June 1, 2005. As with the 2003 report, we will either approve or disapprove these additional showings within four months or, if we take no action, the showing will be deemed approved.

Finally, we are providing this option so that small refiners may use the temporary flexibility provided by the 500 ppm option as a pathway toward compliance with the 15 ppm standard and not as an opportunity for those refiners to greatly expand their production of fuel meeting the 500 ppm sulfur standard. To help ensure that any significant expansion of refining capacity that a small refiner undertakes in the future will be accompanied by an expansion of desulfurization capacity, we are limiting the volume of 500 ppm sulfur fuel that a small refiner may produce under this option to a baseline level. Specifically, small refiners selecting this 500 ppm option must limit the volume they produce of highway diesel fuel meeting the 500 ppm sulfur standard to the lesser of the following values: (1) 105 percent of the average highway diesel volume it produced from crude oil in calendar years 1998 and 1999 or (2) the average highway diesel volume it produced from crude oil in calendar years 2004 and 2005. Any volume of 500 ppm highway diesel fuel (averaged over the previous 12 consecutive months) that exceeds this limitation after 2006 must comply with the diesel sulfur standards that apply to other refiners under the broader program (i.e., the standards described in Section IV.A. above, including the 80% requirement of the temporary compliance option).

ii. Small Refiner Credit Option

We believe that the relative difficulty for small refiners to comply with today's program warrants compliance flexibility for these refiners. At the same time, we want to encourage all refiners to produce low sulfur diesel fuel as early and in as many geographic areas as possible. As an incentive for small refiners to invest in desulfurization capacity, those that choose to produce 15 ppm fuel earlier than required under the 500 ppm option may generate credits for each gallon of diesel fuel produced that meets the 15 ppm standard. This includes the ability to generate credits prior to the start of the program on June 1, 2006 under the provisions described in Section IV.A.1.a. They could then sell these credits to other refiners for use in the broader optional diesel fuel compliance program described above in Section IV.A, helping to offset some low sulfur diesel fuel production costs.

Under this option, credits may be generated based on the volume of any diesel fuel that meets the 15 ppm standard. Refiners may then sell their remaining highway diesel fuel under the 500 ppm option above.

Pre-compliance reporting for small refiners choosing this Small Refiner Credit option is identical to that for the 500 ppm option (that is, if the small refiner is also producing 500 ppm highway diesel fuel), with the additional requirement that the refiner also report on any credits it expects to generate and sell. If the quantity of 15 ppm fuel that the refiner is preparing to produce is significant, this factor may be useful in making the necessary showing that 15 ppm fuel will be available in the refiner's market area.

iii. Diesel/Gasoline Compliance Date Option

The Tier 2/Gasoline Sulfur program included a special provision that applies for refiners that qualify as small refiners (40 CFR Part 80, Subpart H). Under that program, each small refiner is assigned an interim gasoline sulfur standard for each of its refineries. This interim standard for each refinery is established based on the baseline sulfur level of that refinery. The standards are designed to require each small refiner to either make a partial reduction in their gasoline sulfur levels or, if they already produce low sulfur fuel, to maintain their current levels. The interim program lasts for four years, 2004 through 2007, and the refiner can apply for an extension of up to three years. After the interim program expires, small refiners must produce the same low sulfur gasoline as other refiners.

Today's diesel sulfur program takes effect in the same time frame as the small refiner interim program for low sulfur gasoline. To avoid the need for simultaneous investments in both gasoline and diesel fuel desulfurization, several small refiners subject to both programs raised the concept of allowing those investments to be staggered in time. Because of the relative difficulty small refiners will face in financing desulfurization projects, especially for both diesel and gasoline desulfurization in the same time frame, we agree that this concept has merit and have adopted it for this rule. Under this concept, small refiners may extend the duration of their gasoline sulfur interim standards and, thus, potentially postpone some or all of their gasoline desulfurization investments while they work to achieve the low sulfur diesel standard ''on time'' in 2006. To the extent that small refiners choose this Diesel/Gasoline Compliance Date option, this provision will benefit the overall diesel program by increasing the availability of 15 ppm diesel fuel in the small refiners' market areas.

Specifically, this option provides that a small refiner can receive a three-year extension of a refinery's interim gasoline standard, until January 1, 2011, if it meets two criteria: (1) It produces both gasoline and diesel fuel at a refinery and chooses to comply with the 15 ppm diesel fuel sulfur standard by June 1, 2006 for all its highway diesel production at that same refinery, and (2) it produces a minimum volume of 15 ppm fuel at that refinery that is at least 85 percent of the average volume of highway diesel fuel that it produced at that refinery during calendar years 1998 and 1999. We believe that it is very important that the extension of a small refiner's interim low sulfur gasoline standard be linked to a substantial environmental benefit from the production of low sulfur diesel fuel in 2006. We have established a minimum volume requirement to prevent the Diesel/Gasoline Compliance Date option from applying in situations where a refiner changes its refinery product slate to produce very little highway diesel fuel—even though this production is at a 15 ppm sulfur level—and yet receives an extension of its interim gasoline sulfur standard.[170] We believe the 85 percent level is sufficient to reflect a substantial investment in desulfurization technology. At the same time the 85 percent level should allow for any reasonable variation in production of highway diesel fuel that would be expected to occur in typical situations between now and 2006, particularly given the continued growth of the highway diesel market. Again, the three-year extension of the gasoline interim program is to allow small refiners to stretch out their capital investments while increasing the quantity of 15 ppm fuel being produced. We expect that small refiners using this option will make a substantive capital investment in diesel desulfurization and have thus set this minimum 15 ppm diesel volume limit.

We believe that the additional three-year extension of the interim gasoline sulfur standards provided today is warranted without any further action by small refiners, provided that they assume the financial burden of full low sulfur diesel compliance in 2006 (i.e., instead of choosing the flexibility of the broader temporary compliance program). The diesel and gasoline desulfurization investments for those refiners can thus be staggered in time. We believe a three-year extension is appropriate due to the substantial investment in highway diesel fuel that these small refiners will be undertaking.

By July 1, 2006, small refiners that plan to use the Diesel/Gasoline Compliance Date option for one or more refineries must send a letter to us confirming that by June 1, 2006 they were producing 100 percent of their highway diesel fuel in compliance with the 15 ppm sulfur standard at their refinery(ies). These refiners must make similar confirmations each year through 2011 in their annual compliance reports (due by the end of February of each year)—until after the end of the extended interim low sulfur gasoline program for small refiners on December 31, 2010.

If a given small refiner was not producing 15 ppm fuel for all its highway diesel production at that refinery by June 1, 2006, the July 1, 2006 letter must confirm that the refiner is forfeiting the ''automatic'' three-year extension of that refinery's interim gasoline program (although the refiner may still apply for a case-by-case extension through the Tier 2/Gasoline Sulfur program under 40 CFR 80.260). In this case, we will consider a request that the refiner be allowed to use either the 500 ppm option or the Small Refiner Credit option, or both, provided that information addressing the conditions of these options as described above are included in the July 1, 2006 letter. If the refiner does not request the use of the 500 ppm option or the Small Refiner Credit option, the letter must confirm that the refiner is complying with the diesel sulfur requirements applicable to refiners that are not small refiners.

The Tier 2/Gasoline Sulfur program includes a general hardship provision for which refiners may apply. (Today's program also includes a similar provision). Depending on the nature of its hardship, a small refiner that applies for this general hardship provision under the gasoline program may be granted a ''tailor-made'' interim gasoline sulfur program different from the ''default'' program established in the rule. If such a small refiner were then to be covered by today's diesel fuel requirements and chose this Diesel/Gasoline Compliance Date option, we will allow it an extension of its special interim program for gasoline (as established under the general hardship provision) for three years beyond the scheduled end date (although no later than December 31, 2010) so long as it

[170] If a situation arises where a small refiner did not produce highway diesel fuel in 1998 or 1999 but later begins to produce 15 ppm diesel fuel, use of the Diesel/Gasoline Compliance Date option will require case-by-case EPA approval. In its application for such approval, a refiner must show us that the net loss of emission reductions will not be significant and must propose an appropriate minimum production volume. In evaluating such a proposed minimum volume, we may consider, among other factors, the typical ratio between highway diesel and gasoline production for small-to-medium sized refineries in the industry.

met the 15 ppm diesel fuel standard and production volume requirements in 2006.

As with the other two options, refiners expecting to use the Diesel/Gasoline Compliance Date option and thus to produce their highway diesel fuel exclusively at 15 ppm fuel will have to report certain information beginning in 2003. As a part of their pre-compliance reporting due June 1, 2003 (see Section IV.A. above), any small refiners taking advantage of this option must provide information showing that diesel desulfurization plans are on track. The information supplied under this requirement must include, but will not be limited to, the following: (1) Status of applying for and receiving any necessary air pollution control permits, (2) financing that is in place or being sought, and (3) the status of engineering or construction contracts. As a part of the pre-compliance reporting due in 2004 and 2005, the refiner must provide more complete information as it becomes available to update its earlier report (e.g., the status of beginning or completing construction of desulfurization equipment).

iv. Relationship of the Options to Each Other

By definition, since a small refiner must produce 100 percent of its highway diesel as 15 ppm under the Diesel/Gasoline Compliance Date option, that option is not compatible with either the 500 ppm option or the Small Refiner Credit option. Thus a refiner choosing the Diesel/Gasoline Compliance Date option may not choose either of the other two options. However, the 500 ppm option and the Small Refiner Credit option are compatible with each other, and so a refiner may choose either or both of these options.

d. How Do Small Refiners Apply for Small Refiner Status?

Refiners that are not small refiners under the gasoline sulfur program but that are seeking small refiner status under the diesel sulfur program must apply to us as a part of their registration for the general diesel sulfur program, due no later than December 31, 2001. The application must include the following information: [171]

- The name and address of each location at which any employee of the company, including any parent companies or subsidiaries,[172] worked during the 12 months preceding January 1, 2000;
- The average number of employees at each location, based on the number of employees for each of the company's pay periods for the 12 months preceding January 1, 2000;
- The type of business activities carried out at each location; and
- The total crude oil refining capacity of its corporation. We define total capacity as the sum of all individual refinery capacities for multiple-refinery companies, including any and all subsidiaries, as reported to the Energy Information Administration (EIA) for 1999, or in the case of a foreign refiner, a comparable reputable source, such as professional publication or trade journal.[173] Refiners do not need to include crude oil capacity used in 1999 through a lease agreement with another refiner in which it has no ownership interest.

The crude oil capacity information reported to the EIA or comparable reputable source is presumed to be correct. However, in cases where a company disputes this information, we will allow 60 days after the company submits its application for small refiner status for that company to petition us with detailed data it believes shows that the EIA or other source's data was in error. We will consider this data in making a final determination about the refiner's crude oil capacity.

We will consider any refiner that was granted small refiner status under the Tier 2/Gasoline Sulfur program to also qualify as a small refiner under today's program, provided that it also produced highway diesel fuel in 1999. Such a refiner only needs to indicate as a part of its registration for this program that it is covered by the gasoline sulfur small refiner program and that it expects to be eligible for any small refiner optioins available in today's diesel program.

2. *Farmer Cooperative Refiners Will Benefit From the Flexible Provisions Available to Other Refiners*

Some refineries in the U.S. are owned by farmer cooperatives. In the NPRM, we asked for comment on whether it would be appropriate to extend hardship relief to farmer cooperatives, similar to the flexibility options for small refiners. Representatives of farmer cooperative refiners have commented to us that as refiners they face unique challenges under a diesel fuel sulfur program. As described in more detail below and in the Response to Comments document, we have carefully considered the situation of farmer cooperative refiners. We have concluded that while there are clearly differences in how farmer cooperative refiners are organized and are financed compared to other refiners, we are not able to make a determination that farmer cooperative refiners, as a class, face unique economic hardship. As discussed further below, we believe that the combination of flexibilities built into today's diesel program will be valuable to farmer cooperative refiners. To the extent any of the farmer cooperative refiners face economic hardship in complying with the diesel sulfur program, this determination can best be made on a case-by-case basis for each farmer cooperative refiner, as discussed further below.

As is the case for all refiners, we believe that farmer cooperative refiners will be able to benefit significantly from the several flexibility provisions discussed elsewhere in Section IV of this preamble. As we mentioned above, the farmer cooperative refiner with the smallest refinery appears to meet the criteria for status as a ''small refiner,'' and thus will likely be eligible for the special provisions discussed earlier (Section IV.C.1. above). The second smallest refinery owned by a farmer cooperative is located and markets all or most of its gasoline within the geographic GPA and, as such, is eligible for GPA low sulfur gasoline extension described in Section IV.B. above (if it meets the production and volume requirements for 15 ppm fuel). Alternatively, this refinery could participate in the temporary compliance option for diesel fuel described in Section IV.A. above.

The two other farmer cooperative refiners (as well as any other refiner) may participate in the temporary compliance option for diesel fuel and the averaging, banking, and trading provisions described above (Section IV.A.), potentially allowing them to postpone diesel desulfurization investments. If needed, any of the farmer cooperative refiners may also apply for case-by-case hardship relief (Section IV.C.3. below). Through such a case-by-case review, we will be in a better position to make a determination of whether a particular farmer cooperative refiner faced an economic hardship situation, as we would then have available to us specific financial information about each cooperative owner. If we determine that a cooperative refiner faced an economic

[171] See the Section VII.E below and regulatory language associated with this rule for detailed requirements for registration and application for small refiner status.

[172] ''Subsidiary'' here covers entities of which the parent company has 50 percent or greater ownership.

[173] We will evaluate each foreign refiner's documentation of crude oil capacity on an individual basis.

hardship situation, we could then tailor any temporary hardship provisions to best suit the needs of that refiner. Given this combination of options and ''safety valves'' built into the diesel sulfur program, and the factors discussed below, we do not believe it is necessary to provide special provisions specifically for farmer cooperative refiners as a class.

Farmer cooperatives that own refineries, like all farmer cooperatives, are organized as a means for individual farmers (or local cooperatives owned by individual farmers) to collectively gain benefits in important aspects of their farming businesses—in this case, the production and distribution of the fuel needed for their operation. It should also be noted that the diesel fuel produced by farmer cooperative refiners is sold not only to farmers, but also to the wholesale petroleum market, for sale at service stations, truck stops, or fleets. Individual farmers and others become members of local cooperatives that provide a range of products and services to their members. These local cooperatives in turn often form the membership of larger, regional cooperatives, including those that own three of the four farmer cooperative refineries in the U.S.

Refiners that are also cooperative businesses are significantly different from other refiners in several respects. The key aspect is that several avenues for accessing capital used by many other refiners (in this case, the capital needed to carry out diesel fuel desulfurization projects in their refineries) are not available to, or are not practical for, cooperative refiners. In particular, farmer cooperatives, unlike publicly-held corporations, are generally not permitted to raise equity capital in the securities markets (that is, by selling stock). At the same time, the equity financing provided by the membership, usually a modest amount assessed from each member as a condition of membership, provides a return for the members only to the extent that the members purchase the products or services of the cooperative. Conventional investors that do not regularly patronize the cooperative have little incentive to provide investment from the outside, since their investment will not appreciate in value.

For farmer cooperatives, money for capital projects is generally raised internally as equity from members and as loans from banks or other financial institutions. In this sense, farmer cooperative refiners are similar to privately-held refining companies, which are also unable to raise capital by selling public stock. In the case of farmer cooperatives, equity capital is raised either by assessment of the members or, more often, by retaining a portion of the cooperative's earnings that would otherwise be distributed to the members (on the basis of how much business they have done with the cooperative). The amount of equity available to the cooperative, as well as the earning prospects of the cooperative, usually determine whether financial institutions will lend additional capital, how much money will be lent, and what terms the cooperative will have to agree to. For example, when a cooperative's equity is low and/or the farm economy is stressed (and thus the prospects for strong earnings performance by the cooperative are diminished) cooperatives can have difficulty competing among other potential borrowers for loans for large capital projects.

While the unique structural and financial characteristics of farmer cooperative refiners can present special challenges to these refiners, their status as cooperatives can also provide advantages not shared by other refiners. The same federal and state laws and regulations that place limitations on the financial avenues available to cooperatives also tend to include special provisions only available to cooperatives. These include special treatment for cooperatives under securities laws, antitrust laws, contractual marketing laws, and restrictive corporate entity laws, some or all of which may come into play in efforts to capitalize refinery desulfurization projects.

Also, the relatively large regionally-based cooperatives that own refineries have a variety of other business interests as well. This broader business base, which involves not only the refining and distribution of fuels but also a variety of other agricultural supply, processing, and related operations, may often provide an advantage to these larger cooperative refiners as compared to competing refiners that have little or no business beyond refining and fuel marketing. Finally, the three larger farmer cooperative refiners have developed several economic relationships among one another—including joint refinery ownership, a joint refinery operating agreement, and a joint fuel distribution and marketing organization—that together create greater options for financing than are available to many other refiners.

Based on the compliance option provisions in this action we do not believe that farmer cooperative refiners as a class face a disproportionate economic burden in complying with the diesel sulfur program. However, certain cooperative refiners may face additional economic obstacles, therefore the potential need exists for some financial assistance to farmer cooperative refiners from U.S. government programs. During interagency review, concerns were discussed relating to the uniqueness of the structure of farmer cooperative refineries and the key issue of accessing capital was identified. The U.S. Department of Agriculture (USDA) has indicated an interest and willingness to review its existing authorities for the potential mechanisms to provide financial assistance to refiner cooperatives who do invest in desulfurization programs. Congress and USDA have long recognized the unique circumstances of farmers and rural communities by establishing programs to provide assistance. This assistance would be primarily in the form of guaranteed loans, which could provide a significant source of funding for cooperative refiners to make capital investment in desulfurization. However, USDA's loan program is subject to limitations, including a $25 million annual cap on individual loans, so the cooperative refiners may have to acquire additional financing. EPA understands that USDA supports efforts, where appropriate, to provide assistance to farmer-owned cooperatives from other sources.

In conclusion, after reviewing this information, we have not been able to clearly distinguish a unique economic burden that today's program will place on farmer cooperative refiners, as a class, apart from other refiners, especially other refiners of similar size and/or those that are privately-held companies. However, as described above, several of the flexible provisions we have incorporated into the overall diesel sulfur program will be valuable to farmer cooperative refiners.

3. *General Hardship Provisions*

a. Temporary Waivers from Low Sulfur Diesel Requirements in Extreme Unforseen Circumstances

In this final rule, we are adopting a provision which, at our discretion, will permit domestic or foreign refiners to seek a temporary waiver from the highway diesel sulfur standards under certain rare circumstances. This waiver provision is similar to provisions in the reformulated gasoline (RFG) and low sulfur gasoline regulations. It is intended to provide refiners short-term relief in unanticipated circumstances—such as a refinery fire or a natural disaster—that cannot be reasonably foreseen now or in the near future.

Under this provision, a refiner may seek permission to distribute highway diesel fuel that does not meet the applicable low sulfur standards for a brief time period. An approved waiver of this type could, for example, allow a refiner that has reached its maximum allowable production volume of 500 ppm sulfur fuel under the temporary compliance option to temporarily and modestly exceed that volume, so long as the other conditions described below were met. Such a request will be based on the refiner's inability to produce complying highway diesel fuel because of extreme and unusual circumstances outside the refiner's control that could not have been avoided through the exercise of due diligence. The request will also need to show that other avenues for mitigating the problem, such as purchase of credits toward compliance under the temporary compliance option, had been pursued and yet were insufficient.

As with other types of relief established in this rule, this type of temporary waiver will have to be designed to prevent fuel exceeding the 15 ppm standard from being used in 2007 and later vehicles. As with the small refiner hardship provisions described above, any such waiver must show that other sources of 15 ppm fuel exist in the refiner's market area to help reduce the risk that owners of 2007 and later diesel vehicles will have difficulty finding the 15 ppm fuel they need during the period of the waiver.

The conditions for obtaining a low sulfur diesel waiver are similar to those in the RFG and low sulfur gasoline regulations. These conditions are necessary and appropriate to ensure that any waivers that are granted are limited in scope, and that refiners do not gain economic benefits from a waiver. Therefore, refiners seeking a waiver must show that the waiver is in the public interest, that the refiner was not able to avoid the nonconformity, that it will make up the air quality detriment associated with the waiver, that it will make up any economic benefit from the waiver, and that it will meet the applicable diesel sulfur standards as expeditiously as possible.

b. Temporary Waivers Based on Extreme Hardship Circumstances

In addition to the provision for short-term relief in extreme unforseen circumstances, we are adopting a provision for relief based on extreme hardship circumstances. In developing our diesel sulfur program, we considered whether any refiners would face particular difficulty in complying with the standards in the lead time provided. As described earlier in this section, we concluded that refineries owned by small businesses will experience more difficulty in complying with the standards on time because they have less ability to raise the capital necessary for refinery investments, face proportionately higher costs because of poorer economies of scale, and are less able to successfully compete for limited engineering and construction resources. However, it is possible that other refiners that are not small refiners will also face particular difficulty in complying with the sulfur standards on time. Therefore, we are including in this final rule a provision which allows us, at our discretion, to grant temporary waivers from the diesel sulfur standards based on a showing of extreme hardship circumstances.

The extreme hardship provision allows any domestic or foreign refiner to request a waiver from the sulfur standards based on a showing of unusual circumstances that result in extreme hardship and significantly affect a refiner's ability to comply with the low sulfur diesel standards by June 1, 2006. An approved extreme hardship waiver may provide refiners with provisions similar to those for small refiners, or as with the waiver for extreme unforseen circumstances, may provide a greater allowance for producing 500 ppm (for sale only for use in pre-2007 vehicles) during the period the temporary compliance option is in effect. As with other relief provisions established in this rule, any waiver under this provision must be designed to prevent fuel exceeding the 15 ppm standard from being used in 2007 and later vehicles.

By providing short-term relief to those refiners that need additional time because they face hardship circumstances, we can adopt an overall program that reduces diesel fuel sulfur beginning in 2006 for the majority of the industry. However, we do not intend for this waiver provision to encourage refiners to delay planning and investments they would otherwise make. We do not expect to grant temporary waivers that apply to more than approximately one percent of the national highway diesel fuel pool in any given year.

The regulatory language for today's action includes a complete list of the information that must be included in a refiner's application for an extreme hardship waiver. If a refiner fails to provide all the information, as specified in the regulations, as part of its hardship application, we can deem the application void. The following are some examples of the types of information that must be contained in an application:

—The crude oil refining capacity and diesel fuel sulfur level at each of the refiner's refineries.

—Details on how the refiner plans to modify its current operation to achieve future diesel fuel sulfur levels.

—The anticipated timing for the overall project the refiner is proposing and key milestones to ultimately produce 100 percent of highway diesel fuel at the 15 ppm sulfur standard.

—The refiner's capital requirements for the proposed project

—Plans for financing the project and financial statements

—List of the areas where the refiner's diesel fuel will be sold.

We will consider several factors in our evaluation of the hardship waiver applications. Such factors will include whether a refinery's configuration is unique or atypical; the proportion of diesel fuel production relative to other refinery products; whether the refiner, its parent company, and its subsidiaries are faced with severe economic limitations (for example, a demonstrated inability to raise necessary capital or an unfavorable bond rating); steps the refiner has taken to attempt to comply with the standards, including efforts to obtain credits towards compliance. In addition, we will consider the total crude oil capacity of the refinery and its parent or subsidiary corporations, if any, in assessing the degree of hardship and the refiner's role in the diesel market. Finally, we will consider where the diesel fuel will be sold in evaluating the environmental impacts of granting a waiver.

This extreme hardship provision is intended to address unusual circumstances that should be apparent now or will emerge in the near future. Thus, refiners seeking additional time under this provision must apply for relief by June 1, 2002. Applicants for a hardship waiver must also submit a plan demonstrating how they will achieve the standards as quickly as possible. In submitting the plan, applicants must include a timetable for obtaining the necessary capital, contracting for engineering and construction resources, obtaining any necessary permits, and beginning and completing construction.

We will review and act on applications and, if a waiver is granted, will specify a time period, not to extend beyond May 31, 2010, for the waiver.

D. Technological Feasibility of the Low Sulfur Diesel Fuel Program

This section summarizes our assessment of the feasibility of refining

and distributing diesel fuel with a sulfur content of no more than 15 ppm. Based on this evaluation, we believe it is technologically feasible for refiners to meet the 15 ppm sulfur standard in the lead time provided. We are summarizing our analysis here and we refer the reader to the RIA for more details.

1. *What Technology Will Refiners Use?*

Conventional diesel desulfurization technologies have been available and in use for many years. Conventional hydrotreating technology involves combining hydrogen with the distillate (material falling into the boiling range of diesel fuel) at moderate pressures and temperatures and flowing the mixture through a fixed bed of catalyst.

We project that all refiners will be technically capable of meeting the 15 ppm sulfur cap with extensions of the same conventional hydrotreating which they are using to meet the current highway diesel fuel standard of 500 ppm sulfur. This extension will likely mean adding a second stage of conventional hydrotreating. Converting an existing one-stage hydrotreater into a two-stage hydrotreater will involve adding an additional reactor as well as other, more minor units to support the new desulfurization unit. These units could include hydrogen plants, sulfur recovery plants, amine plants and sour water scrubbing facilities. All of these units are already operating in refineries, but may have to be expanded or enlarged. We also project that all refiners will utilize recently developed, high activity catalysts, which increase the amount of sulfur that can be removed relative to the catalysts which were available when the current desulfurization units were designed and built.

While still utilizing this conventional hydrotreating technology, we expect that some refiners (roughly 20 percent of current production volume) will decide to invest in a completely new two-stage hydrotreater rather than revamp their current unit. This could occur because the current hydrotreater is too old or designed to operate at too low a pressure, or because the refiner desires to expand production of highway diesel fuel.

The sufficiency of conventional hydrotreating to meet a 15 ppm sulfur cap with current diesel fuel blendstocks is based primarily on information provided by several refining technology vendors.[174] The vendors all projected that two-stage hydrotreating would be sufficient to meet a 15 ppm sulfur cap. However, their projections of hydrogen consumption and requisite reactor volume varied widely. Our projections for hydrogen consumption and reactor volume are near the lower end of the range and are essentially the same projections as were made in support of the proposed rule.

Many refiners commented that we had underestimated the cost of meeting the 15 ppm sulfur cap. They argued that higher pressure, thick walled reactors of greater volume would be needed and that hydrogen consumption would be much higher than we projected. With one exception, neither the refiners, nor the technology vendors provided any underlying catalyst performance data with which we could use to arbitrate between the varying projections. One vendor did submit catalyst performance data from a commercial unit processing a diesel fuel like that produced in the U.S. Such commercial data is very limited, as refiners are generally not currently producing diesel fuel at sulfur levels below 10 ppm with this technology from diesel fuel feedstocks typical of U.S. refiners. Some refiners are currently producing diesel fuel at sulfur levels below either 10 or 50 ppm. However, their diesel fuel blendstocks differ substantially in quality from those available in the U.S., so their experience cannot be extrapolated easily to producing sub-15 ppm sulfur diesel fuel in the U.S.

Based on our review of the limited catalyst performance data in the published literature and the one set of confidential data submitted, we believe that the projections of the more optimistic vendors are the most accurate for the 2006 timeframe. For example, the confidential commercial data indicated that five ppm sulfur levels could be achieved with two-stage hydrotreating a moderate hydrogen pressures despite the presence of a significant amount of light cycle oil (LCO). The key factor was the inclusion of a hydrogenation catalyst in the second stage, which saturated many of the poly-nuclear, aromatic rings in the diesel fuel, allowing the removal of sulfur from the most sterically hindered compounds. In addition, refiners that are able to defer production of 15 ppm diesel fuel through the purchase of credits will have the added benefit of being able to observe the operation of those hydrotreating units starting up in 2006. This should allow these refiners to be able to select from the best technologies which are employed in the first phase of the program.

In addition, alternative technologies are presently being developed which could produce additional savings for refiners that are able to delay production of 15 ppm fuel until 2010. Phillips 66 Company, for example, just announced that they are developing a version of their S-Zorb technology for diesel fuel desulfurization. This technology has been selected by at least one major refiner (Marathon-Ashland) to meet the Tier 2/low sulfur gasoline requirements. In conjunction with a DOE research program, Phillips is designing and constructing a commercially sized S-Zorb diesel fuel unit at their Borger refinery. This unit is currently scheduled for start-up in 2004. We believe that this technology could reduce the cost of meeting the 15 ppm cap by roughly 25 percent.

2. Have These Technologies Been Commercially Demonstrated?

As mentioned above, conventional diesel desulfurization technologies have been available and in use for many years. U.S. refiners have roughly seven years of experience with this technology in producing highway diesel fuel with less than 500 ppm sulfur. Refiners in California also have the same length of experience with meeting the California 500 ppm cap on sulfur and an additional aromatics standard.[175] To meet both sulfur and aromatics standards, refineries in California are producing highway and nonroad diesel fuel with an average sulfur level of 150 ppm.

Some refiners in Europe are producing a very low-sulfur, low aromatics diesel fuel for use in the cities in Sweden (Class I Swedish Diesel) using two-stage hydrotreating. This ''Swedish city diesel'' is averaging under 10 ppm sulfur and under 10 volume percent aromatics. While clearly demonstrating the feasibility of consistently producing diesel fuel with less than 10 ppm sulfur from selected feedstocks, there are a few differences between the Swedish fuel and typical U.S. diesel fuel. First, the tight aromatics specification applicable to Swedish City diesel fuel usually requires the use of ring-opening or dearomatization catalysts in the second stage of the two-stage hydrotreating unit. Second, Swedish Class I diesel fuel also must meet a tight density specification. Third, it is not clear

[174] Technology vendors were invited to submit projections of technology and cost to two studies of the cost of diesel fuel desulfurization by Mathpro, Inc. One study was performed for EMA, and the other for the National Petroleum Council.

[175] California allows refiners to use an engine test to certify an alternative fuel mixture which meets or exceeds the NO_X reducing performance of a 10 volume percent maximum aromatics and a 500 ppm maximum sulfur diesel fuel.

whether any refiner is producing a large fraction of their distillate production to this specification. Thus, the European experience demonstrates the efficacy of the two-stage process and its ability to produce very low sulfur diesel fuel. However, doing so without saturating most of the aromatics present and with heavier feedstock has only been demonstrated in pilot plants and not commercially. Even this pilot plant data has not been available for us to evaluate directly, due to vendors' competitiveness concerns.

Europe has adopted a 50 ppm cap sulfur standard for all diesel fuel which takes effect in 2005. Some countries, including England, have implemented tax incentives for refiners to produce this fuel sooner. The majority of diesel fuel in England already meets the 50 ppm specification. Refiners have reported no troubles with this technology. This diesel fuel is being produced in one-stage hydrotreaters. However, as mentioned above, European diesel fuel contains less heavier compounds than diesel fuel in the U.S., so the use of one-stage conventional hydrotreating to meet very low sulfur levels is applicable, but not sufficient to demonstrate feasibility in the U.S. Germany has also established a tax incentive, but for diesel fuel containing 10 ppm or less sulfur. One European technology vendor indicated that they have already licensed two desulfurization units to German refiners planning to produce diesel fuel to obtain this tax credit. Europe also is considering a 10 ppm sulfur cap to take effect later in the decade. However, no refiner is currently producing number two diesel fuel to this specification.

Phillips Petroleum is currently in the process of designing and constructing a commercial sized S-Zorb unit to produce sub-15 ppm diesel fuel at their Borger, Texas refinery. This plant is scheduled to begin commercial operation in 2004. This may not be in time to give refiners sufficient confidence in this novel process to rely on it to meet the 2006 deadline. However, this process, with its attendant hydrogen, cost, and global emission savings should be available for those refiners that are able to defer investment under the temporary compliance option and hardship provisions of today's rule. While we are confident that this and other technology will be available to meet the requirements of today's rule, EPA will work with the Department of Energy, refiners and technology providers to continue to monitor and analyze the progress in further developing and implementing this new diesel desulfurization technology. This will allow us to improve our understanding of how this new technology can be employed to enhance the implementation of this program.

3. Feasibility of Distributing Low Sulfur Highway Diesel Fuel

We believe that with relatively minor changes and associated costs, the existing distribution system will be capable of adequately managing sulfur contamination during the transportation of 15 ppm highway diesel fuel from the refinery through to the end-user. Further, we believe that the existing system is capable of handling two grades of highway diesel fuel (500 ppm and 15 ppm sulfur cap) in a limited fashion during the transition period of the sulfur program at acceptable cost with the addition of storage tanks at a fraction of distributor facilities.

The following minor changes in distribution practices will be needed as a result of today's rule during the transition years of the fuel program when various hardship and optional compliance provisions are in effect and thereafter:

—To adequately separate shipments of highway diesel fuel from shipments of higher sulfur products, pipeline operators will need to increase the amount of highway diesel fuel that they downgrade to a lower value product.

—Instead of cutting the mixture of jet fuel and highway diesel fuel that results during pipeline shipments of these products into the highway diesel pool, pipeline operators will need to segregate this mixture and sell it into the nonroad diesel pool. This change will necessitate the addition at some terminals of small tanks to handle the mixture of jet fuel and highway diesel fuel.

—Terminal operators will need to perform additional quality control testing to ensure compliance with the 15 ppm sulfur cap.

We also recognize that tank truck operators will need to more carefully and consistently observe current industry practices to limit contamination during the transport of 15 ppm sulfur highway diesel fuel. However, because these practices already exist and need only to be better enforced by distributors, we continue to believe that this can be accomplished at insignificant cost. We believe that there will not be a significant increase in the volume of highway diesel fuel discovered to exceed the sulfur standard downstream of the refinery as a result of today's rule. Distributors will quickly optimize the distribution system using the means described above to avoid creating additional volumes of out of specification product.

To accommodate two grades of highway diesel fuel during the transition period, additional storage tanks will need to be added at some refineries, terminals, bulk plants, and truck stops. There are significant costs associated with the addition of tanks which are fully accounted for during the transition period (see Section V). Commenters on the NPRM stated that in addition to the substantial economic burden that adding additional storage tanks would represent for some distributors, limitations in available space and permitting restrictions could preclude some distributors from installing additional tanks. This transition is also an added concern for those users of specialty fuels (i.e., military fuels, etc.) who currently compete for the limited storage tanks because these fuels must be segregated. We believe that the burden of adding new storage tanks to the system is made manageable by the fact that not all distributors will need to handle 500 ppm as well as 15 ppm sulfur highway diesel fuel during this time period. Marketplace forces will determine which facilities assume the additional burden of handling both grades of highway diesel fuel. Those facilities for which the addition of a storage tank would represent an unacceptable burden would opt not to serve the 500 ppm sulfur highway diesel market during the transition years.

We received several comments on the proposed rule that substantial uncertainties exist regarding the ability of the distribution system to adapt to the added hardship of limiting sulfur contamination of highway diesel fuel meeting a 15 ppm sulfur cap. These commenters noted that under today's rule other products in the distribution system would have a sulfur content of over 300 times the 15 ppm highway diesel fuel sulfur cap, and that unavoidable mixing of small quantities of these high sulfur products into highway diesel fuel could easily cause the 15 ppm sulfur cap to be exceeded. To illustrate the magnitude of the challenge, these commenters noted that currently the maximum sulfur content of any product that shares the distribution system with highway diesel fuel is no more than 10 times the current 500 ppm sulfur cap for highway diesel fuel.[176] Some commenters stated that the only way to adequately limit sulfur contamination in the distribution

[176] Nonroad diesel fuel has a sulfur cap of 5,000 ppm versus a 500 ppm for current highway diesel fuel.

of diesel fuel with a 15 ppm sulfur cap may be to create a completely segregated system (at an unacceptably high cost). These commenters stated that unavoidable contamination could cause many batches of highway diesel fuel to be noncompliant with the 15 ppm cap resulting in shortages and high costs. Some commenters stated that additional evaluation is needed to determine the capability of the distribution system to limit contamination to the very low levels necessitated by today's rule.

While we acknowledge that today's rule will pose a substantial new challenge to the distribution system, we believe that the additional measures outlined in this section will substantially address issues associated with adequately limiting sulfur contamination during the distribution of 15 ppm sulfur highway diesel fuel.[177] Its true that not all of the potential minute sources of sulfur contamination in the distribution sources have been identified and that the cumulative magnitude from these sources is uncertain. However, we believe that the contamination from such sources, while made more significant by the implementation of the 15 ppm sulfur cap, is not of a sufficient magnitude to jeopardize the feasibility of distributing low sulfur highway diesel fuel. We will work with the Department of Energy, refiners and others involved in diesel fuel distribution to analyze, compile data, and conduct additional research, where appropriate, to not only more fully understand all sources of contamination and deliverability in the distribution of diesel fuel below the 15ppm cap, but also their impact on the deliverability of other fuels, including specialty military fuels. This information will be used, in conjunction with information being developed on the operation of emission control devices (which are affected by exposure to sulfur), to monitor progress on the successful implementation of this final rule which depends on an integrated vehicle/fuel systems approach. Please refer to Section V.D. on the costs of today's rule to the distribution system, and to the Regulatory Impact Analysis and Response to Comments documents for additional discussion regarding the feasibility of distributing highway diesel fuel with a 15 ppm sulfur cap.

[177] See the Response to Comments document for this rule.

E. What Are the Potential Impacts of the Low Sulfur Diesel Program on Lubricity and Other Fuel Properties?

1. What Is Lubricity and Why Might It Be a Concern?

Engine manufacturers depend on diesel fuel lubricity properties to lubricate and protect moving parts within fuel pumps and injection systems for reliable performance. Unit injector systems and in-line pumps, commonly used in heavy-duty engines, are actuated by cams lubricated with crankcase oil, and have minimal sensitivity to fuel lubricity. However, rotary and distributor type pumps, commonly used in light and medium-duty diesel engines, are completely fuel lubricated, resulting in high sensitivity to fuel lubricity.

In the United States, there is no government or industry standard for diesel fuel lubricity. Thus, specifications for lubricity are determined by the market. Since the beginning of the 500 ppm sulfur highway diesel program in 1993, fuel system producers, engine and vehicle manufacturers, and the military have been working with the American Society for Testing and Materials (ASTM) to develop protocols and standards for diesel fuel lubricity in its D–975 specifications for diesel fuel. Although the ASTM has not yet adopted specific protocols and standards, we understand that refiners have been treating diesel fuel with lubricity additives on a batch to batch basis, when poor lubricity fuel is expected. In addition, the military has found that traditional corrosion inhibitor additives that it uses in its fuels have been highly effective in reducing fuel system component wear. Some commenters expressed concern about the impacts of a 15 ppm standard on fuel lubricity.

Experience has shown that it is very rare for a naturally high-sulfur fuel to have poor lubricity, although, most studies show relatively poor overall correlation between sulfur content and lubricity. Considerable research remains to be performed for a better understanding of the fuel components most responsible for lubricity. Consequently, we are uncertain about the potential impacts of the 15 ppm sulfur standard on fuel lubricity. There is evidence that the typical process used to remove sulfur from diesel fuel—hydrotreating—can impact lubricity depending on the severity of the treatment process and characteristics of the crude. Because refiners will likely rely on hydrotreating to achieve the proposed sulfur limit, there may be reductions in the concentration of those components of diesel fuel which contribute to adequate lubricity. As a result, the lubricity of some batches of fuel may be reduced compared to today's levels, resulting in an increased need for the use of lubricity additives in highway diesel fuel. In response to the proposal, all comments submitted regarding lubricity either stated or implied that the proposed sulfur standard of 15 ppm would likely cause the refined fuel to have lubricity characteristics that would be inadequate to protect fuel injection equipment, and that mitigation measures such as lubricity additives would be necessary. However, the commenters suggested varied approaches for addressing lubricity. For example, some suggested that we need to establish a lubricity requirement by regulation, but others suggested that the current voluntary (market) system would be adequate. The Department of Defense recommended that we encourage the industry (ASTM) to adopt lubricity protocols and standards before the implementation date of the low sulfur fuel established by today's action. Other suggested approaches included incorporation of biodiesel as a solution to the lubricity issue, and the need to further examine the issues.

Blending small amounts of lubricity-enhancing additives increases the lubricity of poor-lubricity fuels to acceptable levels. These additives are available in today's market, are effective, and are in widespread use around the world. For example, in the U.S., we understand that refiners are treating diesel fuel with lubricity additives on a batch to batch basis, when poor lubricity fuel is expected. Other examples include Sweden, Canada, and the U.S. military. Since 1991, the use of lubricity additives in Sweden's 10 ppm sulfur Class I fuel and 50 ppm sulfur Class II fuel has resulted in acceptable equipment durability.[178] Since 1997, Canada has required that its 500 ppm sulfur diesel fuel not meeting a minimum lubricity be treated with lubricity additives. The U.S. military has found that the traditional corrosion inhibitor additives that it uses in its fuels have been highly effective in reducing fuel system component wear.

2. Today's Action on Lubricity: A Voluntary Approach

We have decided to not establish a lubricity standard in today's action, but have included a 0.2 cents per gallon cost in our calculations for the economic

[178] See letter from MTC to Michael P. Walsh, dated October 16, 2000. In public docket, document IV–G–42.

impact to account for the potential increased use of lubricity additives (see section V.D.2). We believe the best approach is to allow the industry and the market to address the lubricity issue in the most economical manner, while avoiding an additional regulatory scheme. A voluntary approach should provide adequate customer protection from engine failures due to low lubricity, while providing the maximum flexibility for the industry. This approach will be a continuation of current industry practices for diesel fuel produced to meet the current federal and California 500 ppm sulfur diesel fuel specifications, and benefits from the considerable experience gained since 1993. It will also include any new specifications and test procedures that we expect will be adopted by the American Society for Testing and Materials (ASTM) regarding lubricity of highway diesel fuel quality.

We do not believe that an EPA regulation for lubricity is appropriate for several reasons. First, the expertise and mechanism for a lubricity standard already exist in the industry. According to the comments, the industry has been working on a lubricity specification for ASTM D–975, and low cost remedies for poor lubricity have already been proven and are already being used around the world. Although some commenters expressed concerns that the ASTM process might move too slowly to establish a lubricity specification by 2006, we fully expect the refining industry, engine manufacturers and end users to work together to resolve any issues as part of their normal process in dealing with customer and supplier fuel quality issues. Today's action will increase the urgency of those working to establish an ASTM D–975 lubricity specification, and we believe they will do so in time for the production and distribution of the low sulfur highway diesel fuel. We will do our part to encourage the ASTM process be brought to a successful conclusion.

Second, we have no firm basis to justify a lubricity specification in today's action. One such basis might be adequate demonstration that a lubricity level below or above a certain specification would either cause emissions to increase, or hinder the operation of emission control equipment. However, we have no evidence that lubricity impacts emissions, or emission control equipment. This issue is primarily a concern about equipment performance. Equipment performance is more appropriately addressed by the industry rather than government regulation by this Agency.

Third, even if we had a statutory basis to justify a lubricity standard, we are concerned that establishing an EPA lubricity regulation would provoke the same disagreements that the industry is now engaged in its efforts to establish an ASTM D–975 specification. We are in no better position to judge those issues than the industry experts who are already involved. Further, once a specification is put into the regulations and the industry subsequently determines that the specification should be changed, based on new information or circumstances, the burden would be on us to amend the mandated specification by rulemaking. This is a significant burden to put on the Agency for an engine performance issue that can and should be resolved by the industry without government intervention.

Subsequent to the close of the comment period another issue related to lubricity concerns was raised to the Agency. These concerns related to potential incompatibilities in old vehicles of the new engine oils the industry hopes to develop for use in the new 2007 and later model year vehicles. Much of the ash in today's motor oil results from the need to control acidification of the engine oil (maintain total base number, or TBN control), which is in large part a function of the sulfur content of the fuel and the sulfuric acid that it forms. Without the ability to control acidification of the engine oil, engine wear increases significantly. The ash in the oil, however, will tend to shorten the maintenance intervals for particulate filters to remove built up ash on new 2007 and later model year vehicles. At the same time, engines operated on low sulfur fuel have much less need for TBN control and the high ash levels that result. Consequently, manufacturers are investigating with the lubricant industry the potential of lower ash oils for use in engines operated on low sulfur diesel fuel and equipped with particulate traps. If the new oil developed is not ''backwards compatible'' to sufficiently control acidification and wear in the pre-existing fleet of vehicles on the road that may still be operated on high sulfur diesel fuel for the first few years of the program, then two grades of motor oil would have to be on the market simultaneously. This has caused some stakeholders to raise vehicle performance and durability concerns that might result from using the new oil in the old vehicles—namely ''mis-oiling.''

Since the engine and lubricant industries still have a number of years to develop these new oil formulations, it is still premature to determine whether or not the new oils will be backwards compatible and whether mis-oiling would raise any serious concerns. While this would not appear to be an air quality concern and as such something the Agency generally leaves up to the industry to resolve, we will nevertheless offer to work with the industry and industry associations on this issue over the coming years.'' EPA anticipates that engine manufacturers would likely provide engine labels to distinguish low ash oil from high ash oil because misoiling could result in engine damage.

3. What Are Today's Actions on Fuel Properties Other Than Sulfur?

We are not taking action today on any fuel properties other than sulfur. We have examined the impact of fuel properties other than sulfur, such as aromatics, on the materials used in engines and fuel supply systems. We do not believe there will be impacts on materials from such other fuel properties.

While there were some problems with leaks from fuel pump O-ring seals made of a certain material (Nitrile) after the introduction of 500 ppm sulfur diesel fuel in the United States in 1993, these issues have since been addressed by equipment manufacturers who switched to materials that are compatible with low aromatic fuels. The leakage from the Nitrile seals was determined to be due to low aromatics levels in some 500 ppm sulfur fuel, not the low sulfur levels. In the process of lowering the sulfur content of some fuel, some of the aromatics had also been removed. Normally, the aromatics in the fuel penetrate the Nitrile material and cause it to swell, thereby providing a seal with the throttle shaft. When low-aromatics fuel is used after conventional fuel has been used, the aromatics already in the swelled O-ring will leach out into the low-aromatics fuel. Subsequently, the Nitrile O-ring will shrink and pull away, thus causing leaks, or the stress on the O-ring during the leaching process will cause it to crack and leak. Not all 500 ppm sulfur fuels caused this problem, because the amount and type of aromatics varied. Fuel pumps using a different material (Viton) for the seals did not experience leakage. We believe that no additional problems will occur with a change of fuel from 500 to 15 ppm sulfur.

F. How Are State Programs Affected by the Low Sulfur Diesel Program?

1. State Preemption

Section 211(c)(4)(A) of the CAA prohibits states (and political

subdivisions of states) from prescribing or attempting to enforce controls or prohibitions respecting any fuel characteristic or component if EPA has prescribed a control or prohibition applicable to such fuel characteristic or component under section 211(c)(1). This preemption applies to all states except California, as explained in section 211(c)(4)(B). For states other than California, the Act provides two mechanisms for avoiding preemption. First, section 211(c)(4)(A)(ii) creates an exception to preemption for state prohibitions or controls that are identical [179] to the prohibition or control adopted by EPA. Second, states may seek EPA approval of SIP revisions containing fuel control measures, as described in section 211(c)(4)(C). We may approve such SIP revisions, and thereby ''waive'' preemption, only if it finds the state control or prohibition ''is necessary to achieve the national primary or secondary ambient air quality standard which the plan implements.''

When we adopted the current highway diesel fuel sulfur standard of 500 ppm pursuant to our authority under section 211(c)(1) of the CAA in 1990, States were preempted from also doing so under the provisions of section 211(c)(4)(A). The 15 ppm highway diesel fuel sulfur standard promulgated today modifies the existing standard and, as a result, do not initiate any new preemption of state authority. Today's action continues the explicit preemption under section 211(c)(4)(A) of state actions to prescribe or enforce highway diesel fuel sulfur controls. States other than California with highway diesel fuel sulfur control programs not already approved into their SIPs are preempted under Section 211(c)(4)(A) and will therefore need to obtain a waiver from us under the provisions described in section 211(c)(4)(C) for all state fuel sulfur control measures, unless the state control or prohibition is identical to ours.

Aside from the explicit preemption in Section 211(c)(4)(A), a court could also consider whether a state sulfur control is implicitly preempted under the Supremacy Clause of the U.S. Constitution. Courts have determined that a state law is preempted by federal law where the state requirement actually conflicts with federal law by preventing compliance with both federal and state requirements, or by standing as an obstacle to accomplishment of Congressional objectives. A court could thus consider whether a given state sulfur control is preempted, notwithstanding waiver of preemption under 211(c)(4)(C), if it places such significant cost and investment burdens on refiners that refiners cannot meet both state and federal requirements in time, or if the state control would otherwise meet the criteria for conflict preemption.

2. What Provisions Apply in Alaska?

There are important nationwide environmental and public health benefits that will be achieved with cleaner diesel engines and fuel, particularly from reduced particulate emissions, nitrogen oxides, and air toxics (as further discussed in section II). Therefore, it is also important to implement this program in Alaska. Any 2007 and later model year diesel vehicles in Alaska, or driven to Alaska, must be fueled with low sulfur highway diesel, or risk potential damage to the aftertreatment technologies or even the engines themselves. Although the engine standards established today are not based upon different technology and cost implications for Alaska as compared to the rest of the country, the low sulfur fuel program has different implications.

Unlike the rest of the nation, Alaska is currently exempt from the 500 ppm sulfur standard for highway diesel fuel and dye requirements. Since the beginning of the 500 ppm highway diesel fuel program, we have granted Alaska exemptions from meeting the sulfur standard and dye requirements, because of its unique geographical, meteorological, air quality, and economic factors. (These unique factors are discussed generally in this section, and in more detail in the RIA.) Because of these unique factors, we are establishing in today's action an alternative option for implementing the low sulfur fuel program in Alaska.

We are providing the State of Alaska an opportunity to develop an alternative low sulfur transition plan. We intend to facilitate the development of this plan by working in close cooperation with the state and key stakeholders. This plan must ensure that sufficient supplies of low sulfur diesel fuel are available in Alaska to meet the demand of any new 2007 and later model year diesel vehicles. Given that Alaska's demand for highway diesel fuel is very low and only a small number of new diesel vehicles are introduced in Alaska each year, it may be possible to develop an alternative implementation plan for Alaska in the early years of the program that provides low sulfur diesel only in sufficient quantities to meet the demand from the small number of new diesel vehicles. This would give Alaska refiners more flexibility during the transition period because they would not have to desulfurize the entire highway diesel volume. Our goal in offering this additional flexibility is to transition Alaska into the low sulfur fuel program in a manner that minimizes costs, while still ensuring that the new vehicles receive the low sulfur fuel they need. We expect that the transition plan will begin to be implemented at the same time as the national program, but the state will have an opportunity to determine what volumes of low sulfur fuel must be supplied, and in what timeframes, in different areas of the state.

At a minimum, this transition plan must: (1) Ensure an adequate supply (either through production or imports) of 15 ppm fuel to meet the demand of any 2007 or later model year vehicles, (2) ensure sufficient retail availability of low sulfur fuel for new vehicles in Alaska, (3) address the growth of supply and availability over time as more new vehicles enter the fleet, (4) include measures to ensure segregation of the 15 ppm fuel and avoid contamination and misfueling, and (5) ensure enforceability. We anticipate that, to develop a workable transition plan, the state will likely work in close cooperation with refiners and other key stakeholders, including retailers, distributors, truckers, engine manufacturers, environmental groups, and other interested groups. For example, the state will likely rely on input from the trucking industry in determining the expected low sulfur fuel volume needed in Alaska, based on the anticipated number of new vehicles, and how this volume is expected to grow during the first few years of the program. Similarly, the state will likely rely on the Alaska refiners' input regarding plans for supplying (either through production or imports) low sulfur fuel to meet the expected demand. Further, the state will likely rely on input and cooperation from retailers and distributors to determine at which locations the low sulfur fuel should be made available. Retailers offering low sulfur fuel will have to take measures to prevent misfueling, such as pump labeling, which must include

[179] In evaluating whether a state fuel prohibition or control is ''identical'' to a prohibition or control adopted by us, we might consider but is not limited to the following factors in comparing the measures: (1) The level of an emission reduction or pollution control standard for any particular batch of diesel fuel; (2) the use of ''per gallon'' or ''averaged'' amounts in setting that level; (3) the lead time allowed to the affected industry for compliance; (4) the test method(s) and sampling requirements used in determining compliance; and (5) reporting and recordkeeping requirements.

provisions that are at least as stringent as those required of retailers nationally by the regulations and as described in section VII. Similarly, all parties in the distribution system must ensure the low sulfur fuel remains segregated and must take measures to prevent sulfur contamination, in a manner that is at least as stringent as that required nationally by the regulations and as described in section VII.

If the state anticipates that the primary demand for low sulfur fuel will be along the highway system (e.g., to address truck traffic from the lower-48 states) in the early years of the program, then the initial stages of the transition plan could be focused in these areas. We believe it would be appropriate for the state to consider an extended transition schedule for implementing the low sulfur program in rural Alaska, as part of the state's overall plan, based on when they anticipate the introduction of a significant number of 2007 and later model year vehicles in the remote areas.

Under this approach, the state will be given the opportunity to develop such a transition plan, as an alternative to the national program, and submit it to us for approval. We intend to help facilitate the development of the plan, by working closely with the state and the relevant stakeholders so they will have an opportunity to address our concerns in their submittal. It is our intent that any flexibility that is available to small refiners nationwide (as described in Section IV) will also be available to small refiners in Alaska under an approved alternative transition plan. To ensure that refineries and other affected parties will have certainty regarding their regulatory requirements with adequate lead time, Alaska must submit this plan by April 1, 2002 (approximately one year after the effective date of today's rule). If Alaska submits such a plan to us within one year, and if it provides a reasonable alternative as described above, we will conduct a rulemaking with notice for public comment and then publish a final rule promulgating the new regulatory scheme for Alaska. Our intent is to issue such a final rule within one year of Alaska's submittal of the plan. However, if the state chooses not to submit an alternative plan, or if the plan it submits does not provide a reasonable alternative for Alaska as described above, then refiners and other regulated parties in Alaska will be subject to the national program, including the implementation schedule established in today's action, without further regulatory action.

a. Today's Action Regarding the 500 ppm Standard in Alaska

We are extending the existing temporary exemption from the current diesel fuel sulfur standard of 500 ppm for the areas of Alaska served by the Federal Aid Highway System (FAHS) to the effective date for the new standard (*i.e.,* June 1, 2006 at the refinery level; July 15, 2006 at the terminal level; and September 1, 2006 at all downstream locations). While Alaska submitted a petition for a permanent exemption from the 500 ppm standard for these areas, we are not taking further action on that petition. Our goal is to take action on that petition in a way that minimizes costs through Alaska's transition to the new low sulfur program. The cost of compliance could be reduced if Alaska refiners were given the flexibility to meet the low sulfur standard in one step, rather than two steps (*i.e.,* once for the current 500 ppm sulfur standard in 2004 when the temporary exemption expires, and again for the new 15 ppm standard in 2006).

As already discussed, we are allowing Alaska to develop an alternative transition plan for implementing the low sulfur diesel fuel program. During such a transition period, it is possible that both low sulfur diesel fuel (for 2007 and later model year vehicles) and higher sulfur (for older vehicles) highway fuels might be available in Alaska. To avoid the two-step sulfur program described above during an alternative transition period, we will consider additional extensions to the temporary exemption of the 500 ppm standard beyond 2006 (*e.g.,* for that portion of the highway diesel pool that is available for the pre-2007 vehicles) during Alaska's transition period. We will make a decision on any additional temporary extensions, if appropriate, in the context of the separate rulemaking taking action on the alternative transition plan submitted by Alaska.

As in previous actions to grant Alaska sulfur exemptions, we will not base any vehicle or engine recall on emissions exceedences caused by the use of high-sulfur (>500 ppm) fuel in Alaska during the period of the temporary sulfur exemption. Our in-use testing goals are to establish whether representative engines, when properly maintained and used, will meet emission standards for their useful lives. These goals are consistent with the requirements for recall outlined in Section 207(c)(1) of the CAA. Further, manufacturers may have a reasonable basis for denying emission related warranties where damage or failures are caused by the use of high sulfur fuel in Alaska.

The Engine Manufacturers Association commented that the level of protection provided to engine manufacturers under the current exemption for Alaska and the proposal, as described above, falls short of what is reasonable and necessary. It asserted that the use of high sulfur diesel fuel by an engine should raise a ''rebuttable presumption'' that the fuel has caused the engine failure, and that EPA should have the burden of rebutting that presumption. It also asserted that the emissions warranty is a regulatory requirement under Section 207, that only EPA has the authority to exclude claims based on the use of high sulfur diesel fuel. We understand and concur with the manufacturers' concerns about in-use testing of engines operated in an area exempt from fuel sulfur requirements. Consequently, we affirm that, for recall purposes, we will not seek to conduct or cause the in-use testing of engines we know have been exposed to high sulfur fuels. We will likely screen any engines used in our testing program to see if they have been operated in the exempt area. We believe we can readily obtain sufficient samples of engines without testing engines from exempt areas. Also, in any recall that we order, manufacturers have the option of requesting a public hearing. The use of engines that have seen high sulfur fuel will increase the likelihood of a recall hearing. We expect manufacturers to scrutinize any test engines for sulfur usage that were used to justify an ordered recall. In reviewing the warranty concerns of the Engine Manufacturers Association, we have determined that our position regarding warranties, as previously stated and described above, is consistent with section 207(a) and (b) of the CAA and does not require any new or amended regulatory language to implement.

Today's action also grants Alaska's request for a permanent exemption from the dye requirement of 40 CFR 80.29 and 40 CFR 80.446 for the entire state. The costs of complying with the low sulfur (both the current 500 ppm sulfur and new 15 ppm sulfur) diesel fuel requirements could be reduced significantly if Alaska were not required to dye the non-highway fuel. Dye contamination of other fuels, particularly jet fuel, is a serious potential problem. This is a serious issue in Alaska since the same transport and storage tanks used for jet fuel (which is more than half of Alaska's distillate market) are generally also used for other diesel products, including off-highway diesel products which are required to be dyed under the current

national program. This issue is discussed further in the RIA (Chapter VIII).

b. Why Are We Treating Alaska Uniquely?

Section 211(i)(4) of the Clean Air Act (CAA) provides that the states of Alaska and Hawaii may seek an exemption from the diesel fuel sulfur standard (500 ppm as specified in section 211(i)) in the same manner as provided in section 325 of the CAA. The requested exemption could be granted if EPA determines that compliance with such requirement is not feasible or is unreasonable due to unique geographical, meteorological, or economic factors of the territory, or other local factors as EPA considers significant.

On February 12, 1993, Alaska submitted a petition under section 325 of the CAA to exempt highway vehicle diesel fuel in Alaska from paragraphs (1) and (2) of section 211(i) of the CAA, except for the minimum cetane index requirement.[180] The petition requested that we temporarily exempt highway vehicle diesel fuel in communities served by the FAHS from meeting the sulfur content (500 ppm) specified in section 211(i) of the CAA and the dye requirement for non-highway diesel fuel of 40 CFR 80.29, until October 1, 1996. The petition also requested a permanent exemption from those requirements for areas of Alaska not reachable by the FAHS'the remote areas. On March 22, 1994, (59 FR 13610), we granted the petition based on geographical, meteorological, air quality, and economic factors unique to Alaska.

On December 12, 1995, Alaska submitted a petition for a permanent exemption for all areas of the state served by the FAHS, that is, those areas covered only by the temporary exemption. On August 19, 1996, we extended the temporary exemption until October 1, 1998 (61 FR 42812), to give us time to consider comments to that petition that were subsequently submitted by stakeholders. On April 28, 1998 (63 FR 23241) we proposed to grant the petition for permanent exemption. Substantial public comments and substantive new information were submitted in response to the proposal. To give us time to consider those comments and new information, we extended the temporary exemption for another nine months until July 1, 1999 (September 16, 1998, 63 FR 49459). During this time period, we started work on a nationwide rule to consider more stringent diesel fuel requirements, particularly for the sulfur content (today's action). To coordinate the decision on Alaska's request for a permanent exemption with the new nationwide rule on diesel fuel quality, we extended the temporary exemption until January 1, 2004 (June 25, 1999, 64 FR 34126).

As discussed in the previous section, in today's action we are extending the temporary exemption from the 500 ppm diesel fuel sulfur standard to the effective date for the new nationwide 15 ppm diesel fuel sulfur standard in 2006. While it is important to implement in Alaska the cleaner diesel engines and fuel of today's action, our goal is to take action on the petition in a way that minimizes costs through Alaska's transition to the new low sulfur program. The cost of compliance could be reduced if Alaska refiners were given the flexibility to meet the low sulfur standard in one step (i.e., going straight from uncontrolled levels to the 15 ppm sulfur standard), rather than in two steps. We considered the prior public comments we received as a result of our previous notices and actions regarding exemptions from the 500 ppm sulfur standard for highway diesel fuel in Alaska (see RIA).

Unlike in the rest of the country, diesel fuel consumption for highway use in Alaska represents only five percent of the State's total distillate fuel consumption. Aviation and marine applications, power generation and heating consume most of the distillate, while Alaska's highway diesel vehicle fleet is relatively small, particularly outside the FAHS. The state estimates that there are less than 9000 diesel vehicles in the entire state, with less than 600 of these vehicles in all of rural Alaska. The state also indicates that new model vehicles are introduced into the Alaska market at a slower rate than elsewhere, thus Alaska does not need to transition its highway fuel to low sulfur as quickly as the rest of the nation.

Most of the fuel consumed in Alaska is produced by refineries located in Alaska. This is primarily because of the more severe cloud point specification needed for the extremely low temperatures experienced in much of Alaska during the winter and the high cost to import fuel that is produced elsewhere. There are four commercial refineries in Alaska. Only one of these refineries currently has any desulfurization capacity, which is relatively small. Consequently, because these refineries will have to reduce sulfur from uncontrolled levels to meet the new 15 ppm standard established by today's action, these refineries could incur substantially higher costs than those in the rest of the nation. Given the very small highway diesel demand, however, it is doubtful that more than one or two Alaska refineries will choose to produce low sulfur highway fuel, and these refiners could even decide to import it from refineries outside of Alaska.

Further, Alaska's fuel distribution system faces many unique challenges. Unlike the rest of the country, because of its current exemption from the 500 ppm sulfur standard and dye requirements, Alaska does not currently segregate highway diesel fuel from that used for off-road, marine, heating oil, and other distillate uses. Therefore, the distribution system costs for segregating a low sulfur grade of diesel for highway uses will be significant. The existing fuel storage facilities limit the number of fuel types that can be stored. In addition to significant obstacles to expanding tankage in Alaska, the cost of constructing separate storage facilities, and providing separate tanks for transporting low sulfur diesel fuel (e.g., by barge or truck), could be significant. Most of Alaska's communities rely on barge deliveries, and ice formation on the navigable waters during the winter months restricts fuel delivery to these areas. Construction costs are 30 percent higher in Alaska than in the lower-48 states, due to higher costs for freight deliveries, materials, electrical, mechanical, and labor. There is also a shorter period of time during which construction can occur, because of seasonal extremes in temperature and the amount of daily sunlight.

The severe impacts to Alaska's fuel distribution system of implementing a low sulfur requirement for highway diesel fuel would likely occur whether we require the current 500 ppm standard or the new 15 ppm standard. The impacts to Alaska's refineries and fuel importers are greater at 15 ppm than at 500 ppm. It is likely that the refiners and fuel importers would have a significant incremental impact if we required Alaska to implement the 500 ppm diesel fuel sulfur standard in 2004 when the current exemption expires, and the 15 ppm diesel fuel sulfur standard in 2006 when the new national requirement becomes effective, rather than only once for the 15 ppm diesel fuel sulfur standard in 2006.

[180] Copies of information regarding Alaska's petition for exemption, subsequent requests by Alaska, public comments received, and actions by EPA area available in public docket A–96–26.

3. What Provisions Apply in American Samoa, Guam, and the Commonwealth of Northern Mariana Islands?

a. Today's Action Regarding the Highway Diesel Fuel Standard in the Territories

As we proposed, today's action excludes American Samoa, Guam and the Commonwealth of Northern Mariana Islands from the new diesel fuel sulfur requirement of 15 ppm and the 2007 heavy-duty diesel vehicle and engine emissions standards, and other requirements associated with those emission standards. The territories will continue to have access to 2006 heavy-duty diesel vehicle and engine technologies, at least as long as manufacturers choose to market those technologies. We will not, however, allow the emissions control technology in the territories to backslide from those available in 2006. If, in the future, manufacturers choose to market only heavy-duty diesel vehicles and engines with 2007 and later emission control technologies, we believe the market will determine when and if the territories will make the investment needed to obtain and distribute the low sulfur diesel fuel necessary to support these technologies.

This exclusion from emission standards does not apply to the new heavy-duty gasoline engine and vehicle emission standards, because low sulfur gasoline that complies with our regulations will be available, and so concerns about damage to engines and emissions control systems will not exist. This exclusion from emission standards also does not apply to light-duty diesel vehicles and trucks because gasoline vehicles and trucks meeting the emission standards and capable of fulfilling the same functions will be available. We believe that the market will determine when and if having access to new light-duty diesel technologies in the territories, in place of or in addition to gasoline technologies, is important enough to obtain and distribute the low sulfur diesel fuel needed to support those technologies.

As we also proposed, we are requiring all heavy-duty diesel motor vehicles and engines for these territories to be certified and labeled to the applicable requirements (either to the 2006 model year standards and associated requirements under the exclusion, or to the standards and associated requirements applicable for the model year of production under the nationwide requirements) and warranted, as otherwise required under the Clean Air Act and EPA regulations. Special recall and warranty considerations due to the use of excluded high sulfur fuel are the same as those for Alaska during its exemption and transition periods (see the discussion in previous section). To protect against this exclusion being used to circumvent the emission requirements applicable to the rest of the United States (*i.e.,* continental United States, Alaska, Hawaii, Puerto Rico and the U.S. Virgin Islands) after 2006 by routing exempted (pre-2007 technology) vehicles and engines through one of these territories, we are restricting the importation of vehicles and engines from these territories into the rest of the United States. After the 2006 model year, diesel vehicles and engines certified under this exclusion to meet the 2006 model year emission standards for sale in American Samoa, Guam and the Commonwealth of the Northern Mariana Islands will not be permitted entry into the rest of the United States.

b. Why Are We Treating These Territories Uniquely?

Unlike the rest of the nation (except Alaska), these territories are currently exempt from the 500 ppm sulfur standard for highway diesel fuel. Section 325 of the CAA provides that upon request of Guam, American Samoa, the Virgin Islands, or the Commonwealth of the Northern Mariana Islands, we may exempt any person or source, or class of persons or sources, in that territory from any requirement of the CAA, with some specific exceptions. The requested exemption could be granted if we determine that compliance with such requirement is not feasible or is unreasonable due to unique geographical, meteorological, or economic factors of the territory, or other local factors as we consider significant.

Prior to the effective date of the current highway diesel sulfur standard of 500 ppm, the territories of American Samoa, Guam and the Commonwealth of Northern Mariana Islands petitioned us for an exemption under section 325 of the CAA from the sulfur requirement under section 211(i) of the CAA and associated regulations at 40 CFR 80.29. The petitions were based on geographical, meteorological, air quality, and economic factors unique to those territories. We subsequently granted the petitions.[181]

These U.S. territories are islands with limited transportation networks. Combined, these three territories have only approximately 1300 registered diesel vehicles. Diesel fuel consumption in these vehicles represents just a tiny fraction of the total diesel fuel volume consumed on these islands; the bulk of diesel fuel is burned in marine, nonroad, and stationary applications. Consequently highway diesel vehicles are believed to have a negligible impact on the air quality in these territories, which, with minor exceptions, is very good.

All three of these territories lack internal petroleum supplies and refining capabilities and rely on long distance imports. Given their remote location from Hawaii and the U.S. mainland, most petroleum products are imported from East rim nations, particularly Singapore. Although Australia, the Philippines, and certain other Asian countries have or will soon require low sulfur diesel fuel, their sulfur limit is 500 ppm, not the new 15 ppm sulfur limit established by today's action for the United States. Compliance with low sulfur (15 ppm) requirements for highway fuel would require construction of separate storage and handling facilities for small quantities of a unique grade of diesel fuel for highway purposes, or use of low sulfur (15 ppm) diesel fuel for all purposes to avoid segregation. Either of these alternatives would require importation of the low sulfur fuel from Hawaii or the U.S. mainland, and would significantly add to the already high cost of diesel fuel in these territories, which rely heavily on United States support for their economies.

G. Refinery Air Permitting

Prior to making diesel desulfurization changes, some refineries may be required to obtain a preconstruction permit, under the New Source Review (NSR) program, from the applicable state/local air pollution control agency.[182] We believe that today's program provides sufficient lead time for refiners to obtain any necessary NSR permits well in advance of the compliance date. Further, refiners will be able to stagger their construction of desulfurization projects, since many

[181] See 57 FR 32010, July 20, 1992 for American Samoa; 57 FR 32010, July 30, 1992 for Guam; and 59 FR 26129, May 19, 1994 for CNMI.

[182] Hydrotreating diesel fuel involves the use of process heaters, which have the potential to emit pollutants associated with combustion, such as NO_X, PM, CO and SO^2. In addition, reconfiguring refinery processes to add desulfurization equipment could increase fugitive VOC emissions. The emissions increases associated with diesel desulfurization will vary widely from refinery to refinery, depending on many source-specific factors, such as crude oil supply, refinery configuration, type of desulfurization technology, amount of diesel fuel produced, and type of fuel used to fire the process heaters.

refineries could take advantage of the temporary compliance option for low sulfur diesel fuel from 2006–2009, as described in Section IV.A. Although some refiners commented that obtaining air permits would be a factor in their ability to comply in the 2006 time frame, state/local agencies commented that they will make the issuance of permits a top priority, because they strongly support achieving the environmental objectives of the low sulfur highway diesel program. State/local agencies further commented that they are committed to working with all affected parties to expedite the processing and issuance of any necessary permits.

For the Tier 2/gasoline sulfur control program promulgated in December 1999, refiners had expressed concerns that permit delays might impede their ability to meet compliance dates. Although we believed that the Tier 2 program provided sufficient lead time for refiners to obtain permits, we committed to undertake several actions to minimize the possibility of any delays for refineries obtaining major NSR permits for gasoline desulfurization projects. These actions include providing federal guidance on emission control technologies[183] and the appropriate use of motor vehicle emission reductions (resulting from the use of low sulfur gasoline), where available, as emission offsets, as well as forming EPA permit teams to assist states in quickly resolving issues, where needed. These three items are discussed in more detail in the Tier 2 final rule (see 65 FR 6773, Feb. 10, 2000).

Given that today's diesel sulfur program provides more than five years of lead time, as well as an additional transitional period, we believe refiners will have ample time to obtain any necessary preconstruction permits. Nevertheless, we believe it is reasonable to continue our efforts under the Tier 2 program, as described above, to help states in facilitating the issuance of permits under the highway diesel sulfur program. For example, the guidance on BACT and LAER control technology that is currently under development for the gasoline sulfur program should have application for diesel desulfurization projects as well. We will plan to reevaluate this guidance to the extent that it may need to be revised or updated for application to highway diesel desulfurization projects. Similarly, we believe the concept of EPA permit teams for gasoline sulfur projects could readily be extended to permits related to diesel projects as well. These teams will track the overall progress of permit issuance and will be available to assist state/local permitting authorities, refineries and the public upon request to resolve site-specific permitting questions. Further, in Tier 2, we announced our plan to issue guidance to help states determine whether and to what extent they may wish to use vehicle emissions reductions as offsets for refineries implementing gasoline desulfurization projects. We are currently in the process of evaluating public comments received on the draft guidance relating to the use of Tier 2 reductions as refinery offsets. Whatever resolution we determine is appropriate for this guidance in the Tier 2 context, we plan to apply a similar approach for diesel desulfurization projects as well. Finally, to facilitate the processing of permits, we encourage refineries to begin discussions with permitting agencies and to submit permit applications as early as possible.

V. Economic Impact

This Section discusses the projected economic impact and cost effectiveness of the emission standards and low-sulfur fuel requirement. Full details of our cost and cost effectiveness analyses can be found in the RIA.

A. Cost for Diesel Vehicles to Meet Emissions Standards

1. Summary of New System and Operating Costs

The technologies described in Section III represent significant technological advancements for controlling emissions, but also make clear that much effort remains to develop and optimize these new technologies for maximum emission-control effectiveness with minimum negative impacts on engine performance, durability, and fuel consumption. On the other hand, it has become clear that manufacturers have a great potential to advance beyond the current state of understanding by identifying aspects of the key technologies that contribute most to hardware or operational costs or other drawbacks and pursuing improvements, simplifications, or alternatives to limit those burdens. To reflect this investment in long-term cost savings potential, the cost analysis includes an estimated $385 million in R&D outlays for heavy-duty engine designs and $220 million in R&D for catalysts systems giving a total R&D outlay for improved emission control of more than $600 million. The cost and technical feasibility analyses accordingly reflect substantial improvements on the current state of technology due to these future developments.

Estimated costs are broken into additional hardware costs and life-cycle operating costs. The incremental hardware costs for new engines are comprised of variable costs (for hardware and assembly time) and fixed costs (for R&D, retooling, and certification). Total operating costs include the estimated incremental cost for low-sulfur diesel fuel, any expected increases in maintenance cost or fuel consumption costs along with any decreases in operating cost expected due to low-sulfur fuel. Cost estimates based on these projected technology packages represent an expected incremental cost of engines in the 2007 model year. Costs in subsequent years will be reduced by several factors, as described below. Separate projected costs were derived for engines used in three service classes of heavy-duty diesel engines. All costs are presented in 1999 dollars.

The costs of these new technologies for meeting the 2007 model year standards are itemized in the RIA and summarized in Table V.A–1. For light heavy-duty vehicles, the cost of an engine is estimated to increase by $1,990 in the early years of the program reducing to $1,170 in later years and operating costs over a full life-cycle to increase by approximately $500 in the near term. For medium heavy-duty vehicles the cost of a new engine is estimated to increase by $2,560 initially decreasing to $1,410 in later years with life-cycle operating costs increasing by approximately $900 in the near term. Similarly, for heavy heavy-duty engines, the vehicle cost in the first year is expected to increase by $3,230 decreasing to $1,870 in later years. Estimated additional life-cycle operating costs for heavy heavy-duty engines in the near term are approximately $3,800. The higher incremental increase in operating costs for the heavy heavy-duty vehicles is due to the larger number of miles driven over their lifetime (714,000 miles on average) and their correspondingly high lifetime fuel usage. Emission reductions are also proportional to VMT and so are significantly higher for heavy heavy-duty vehicles.

We also believe there are factors that will cause cost impacts to decrease over time, making it appropriate to distinguish between near-term and long term costs. Research in the costs of manufacturing has consistently shown that as manufacturers gain experience in production, they are able to apply innovations to simplify machining and

[183] Best Available Control Technology (BACT) and Lowest Achievable Emission Rate (LAER) technology.

assembly operations, use lower cost materials, and reduce the number or complexity of component parts.[184] Our analysis, as described in more detail in the RIA, incorporates the effects of this learning curve by projecting that the variable costs of producing the low-emitting engines decreases by 20 percent starting with the third year of production (2009 model year) and by reducing variable costs again by 20 percent starting with the fifth year of production. Additionally, since fixed costs are assumed to be recovered over a five-year period, these costs are not included in the analysis after the first five model years. Finally, manufacturers are expected to apply ongoing research to make emission controls more effective and to have lower operating cost over time. However, because of the uncertainty involved in forecasting the results of this research, we have conservatively not accounted for it in this analysis. Table V.A–1 lists the projected costs for each category of vehicle in the near-and long-term. For the purposes of this analysis, ''near-term'' costs are those calculated for the 2007 model year and ''long term'' costs are those calculated for 2012 and later model years.

TABLE V.A–1.—PROJECTED INCREMENTAL SYSTEM COST AND LIFE CYCLE OPERATING COST FOR HEAVY-DUTY DIESEL VEHICLES

[net present values in the year of sale, 1999 dollars]

Vehicle class	Model year	Hardware cost	Life-cycle operating cost [a b]
Light	near term	1,990	509
Heavy-duty	long term	1,170	537
Medium	near term	2,560	943
Heavy-duty	long term	1,410	996
Heavy	near term	3,230	3,785
Heavy-duty	long term	1,870	3,979

[a] Incremental life-cycle operating costs include the incremental costs to refine and distribute low sulfur diesel fuel, the service cost of closed crankcase filtration systems, the maintenance cost for PM filters and the lower maintenance costs realized through the use of low sulfur diesel fuel (see discussion in Section V.C).

[b] These costs are for new vehicles only and do not reflect any costs or savings for the existing fleet.

2. New System Costs for NO_X and PM Emission Control

Several new technologies are projected for complying with the 2007 model year emission standards. We are projecting that NO_X adsorbers and catalyzed diesel particulate filters will be the most likely technologies applied by the industry in order to meet the emissions standards. The fact that manufacturers will have several years before implementation of the new standards ensures that the technologies used to comply with the standards will develop significantly before reaching production. This ongoing development could lead to reduced costs in three ways. First, we expect research will lead to enhanced effectiveness for individual technologies, allowing manufacturers to use simpler packages of emission control technologies than we would predict given the current state of development. Similarly, we anticipate that the continuing effort to improve the emission control technologies will include innovations that allow lower-cost production. Finally, we believe that manufacturers will focus research efforts on any drawbacks, such as fuel economy impacts or maintenance costs, in an effort to minimize or overcome any potential negative effects.

We anticipate that in order to meet the standards, industry will introduce a combination of primary technology upgrades for the 2007 model year. Achieving very low NO_X emissions will require continued development of NO_X emission control technologies and improvements in engine management to take advantage of the exhaust emission control system capabilities. The manufacturers are expected to take a systems approach to the problem of optimizing the engine and exhaust emission control system to realize the best overall performance possible. Since most research to date with exhaust emission control technologies has focused on retrofit programs, there remains room for significant improvements by taking such a systems approach. The NO_X adsorber technology in particular is expected to benefit from re-optimization of the engine management system to better match the NO_X adsorbers performance characteristics. The majority of the $600 million dollars we have estimated for research is expected to be spent on developing this synergy between the engine and NO_X exhaust emission control systems. PM control technologies are expected to be less sensitive to engine operating conditions as they have already shown good robustness in retrofit applications with low-sulfur diesel fuel.

The NO_X adsorber system that we are anticipating will be applied in 2007 consists of a catalyst which combines traditional gasoline three-way conversion technology with a newly developed NO_X storage function, a reductant metering system and a means to control exhaust air fuel (A/F) ratio. The NO_X adsorber catalyst itself is a relatively new device, but is benefitting in its development from over 20 years of gasoline three-way catalyst development. In order for it to function properly, a systems approach that includes a reductant metering system and control of exhaust A/F ratio is also necessary. Many of the new air handling and electronic system technologies developed in order to meet the 2004 heavy-duty engine standards can be applied to accomplish the NO_X adsorber control functions as well. Some additional hardware for exhaust NO_X or O_2 sensing, for exhaust partitioning and for fuel metering will likely be required. The RIA also calculates an increase in warranty costs for this additional hardware. In total the new NO_X control technologies required in order to meet the 2007 emission standards are estimated to increase light heavy-duty engine costs by $1,000, medium heavy-duty engine costs by $1,310 and heavy heavy-duty engine costs by $1,650 in the year 2007. In the year 2012 and

[184] See Chapter V of the final Tier 2 Regulatory Impact Analysis, contained in Air Docket A–97–10.

beyond the incremental costs are expected to decrease to $590 for a light heavy-duty engine, $690 for a medium heavy-duty engine and to $930 for a heavy heavy-duty engine.

Catalyzed diesel particulate filters are experiencing widespread retrofit use in much of Europe as low-sulfur diesel fuel becomes readily available. These technologies are proving to be robust in their non-optimized retrofit applications requiring no modification to engine or vehicle control functions. We therefore anticipate that catalyzed diesel particulate filters can be integrated with new diesel engines with only a minimal amount of engine development. We do not anticipate that additional hardware beyond the diesel particulate filter itself and an exhaust pressure sensor for OBD will be required in order to meet the PM standard. However, in order to ensure trap durability under all possible operating conditions, some engine manufacturers may choose to provide backup regeneration technologies for their PM filter based systems. As detailed further in the RIA and the RTC documents, we do not anticipate that these redundant systems will add to variable costs. We estimate in 2007 that diesel particulate filter systems will add $730 to the cost of a light heavy-duty vehicle, $950 to the cost of a medium heavy-duty vehicle and $1,190 to the cost of a heavy heavy-duty vehicle. By 2012 these costs are expected to decrease to $425, $530, and $690 respectively. These cost estimates are comparable to estimates made by the Manufacturers of Emission Controls Association for these technologies.[185]

The hydrocarbon (HC) exhaust standards set in this rulemaking will be challenging for both diesel and gasoline engine technologies. For diesel engines utilizing the NO_X adsorber based technology solution to control NO_X emissions, HC control due to imprecise NO_X regeneration control may be difficult. One way to ensure HC compliance will be to apply a separate diesel oxidation catalyst which can control HC emissions to the limits set here. These diesel oxidation catalysts are expected to add an additional cost to the system of $206 for light heavy-duty vehicles, $261 for medium heavy-duty vehicles, and $338 for heavy heavy-duty vehicles.

We have eliminated the exemption that allowed turbo-charged heavy-duty diesel engines to vent crankcase gases directly to the environment, so called open crankcase systems, and have projected that manufacturers will rely on engineered closed crankcase ventilation systems which filter oil from the blow-by gases. We estimate that the initial cost of these systems in 2007 will be $37, $42, and $49 for light, medium and heavy heavy-duty diesel engines respectively. Additionally we expect a portion of the oil filtration system to be a service replacement oil filter which will be replaced on a 30,000 mile service interval with a service cost of $10, $12, and $15 for light, medium, and heavy heavy-duty diesel engines respectively. These cost are summarized with the other cost for emission controls in Table V.A–1 and are included in the aggregate cost reported in Section V.D.

3. Operating Costs Associated With NO_X and PM Control

The RIA assumes that a variety of new technologies will be introduced to enable heavy-duty vehicles to meet the new emissions standards. Primary among these are advanced emission control technologies and low-sulfur diesel fuel. The many benefits of low-sulfur diesel fuel are described in Section III, and the incremental cost for low-sulfur fuel is described in Section V.C. The new emission control technologies are themselves not expected to introduce additional operating costs in the form of increased fuel consumption. Operating costs are estimated in the RIA over the life of the vehicle and are expressed as a net present value (NPV) in 1999 dollars for comparison purposes.

Total operating cost estimates include both the expected increases in maintenance and fuel costs (both the incremental cost for low-sulfur fuel and any fuel consumption penalty) due to the emission control systems application and the predicted decreases in maintenance cost due to the use of low-sulfur fuel. Our analysis projects some increase in operating costs due to the incremental cost of low-sulfur diesel fuel but no net increase in fuel consumption with the application of the new emission control technologies (see discussion in Section III.G). The net increase in operating costs are summarized in Table V.A–1. While we are using these incremental operating cost estimates for our cost effectiveness calculations, it is almost certain that the manufacturers will improve existing technologies or introduce new technologies in order to offset at least some of the increased operating costs.

We estimate that the low-sulfur diesel fuel required in order to enable these technologies will have an incremental cost of approximately $0.045/gallon in the near term increasing to $0.050/gallon in the long term as discussed in Section V.C. The low-sulfur diesel fuel may also provide additional benefits by reducing the engine maintenance costs associated with corrosion due to sulfur in the current diesel fuel. These benefits, which are discussed further in Section V.C.5 and in the RIA, include extended oil change intervals due to the slower acidification rate of the engine oil with low-sulfur diesel fuel. Service intervals for the EGR system are also expected to increase due to lower-sulfur induced corrosion than will occur with today's higher-sulfur fuel. This lengthening of service intervals provides a significant savings to the end user. As described in more detail in the RIA we anticipate that low-sulfur diesel fuel will provide additional cost savings to the consumer of $153 for light heavy-duty vehicles, $249 for medium heavy-duty vehicles and $610 dollars for heavy heavy-duty vehicles.

The operating costs for replacement filters in the closed crankcase filtration systems expressed as a net present value in the year of sale are estimated to be $31 for light heavy-duty vehicles, $59 for medium heavy-duty vehicles and $218 for heavy heavy-duty vehicles for vehicles sold in 2007.

PM filter based technologies capture all forms of particulate in the exhaust including inorganic solid particles which can come from the engine oil or wear products of the engine. These inorganic particles (often call ash) must be periodically cleaned from the particulate filter. We have estimated the additional maintenance cost to clean the PM filter expressed as a net present value in the year of sale of $55 for light heavy-duty vehicles, $56 for medium heavy-duty vehicles and $208 dollars for heavy heavy-duty vehicles, as detailed in the RIA.

Factoring the cost savings due to low sulfur diesel fuel into the additional cost for low-sulfur diesel fuel and the service cost of the closed crankcase ventilation system and the PM filter system yields an increase in vehicle operating costs expressed as a net present value in the year of sale of $509 for a light heavy-duty vehicle, $943 for a medium heavy-duty vehicle and $3,785 for a heavy heavy-duty vehicle. These life cycle operating costs are also summarized in Table V.A–1. The net increase in operating cost can also be expressed as an average annual operating cost for each class of heavy-duty vehicle by dividing the total undiscounted operating costs by the average vehicle life assumed to be 9 years for light heavy-duty vehicles, and

[185] Letter from Bruce Bertelsen, Manufacturers of Emission Controls Association (MECA) to William Charmley, US EPA, December 17, 1998. The letter documents a MECA member survey of expected diesel particulate filter costs. Air Docket A–98–32 Item II–D–09.

11 years for medium and heavy heavy-duty engines. Expressed as an approximate annual per vehicle cost, the additional operating cost is estimated as $80 for a light heavy-duty vehicle, $130 for a medium heavy-duty vehicle, and $510 for a heavy heavy-duty vehicle.

B. Cost for Gasoline Vehicles to Meet the New Emissions Standards

1. Summary of New System Costs

To perform a cost analysis for the final gasoline standards, we first determined a package of likely technologies that manufacturers could use to meet the standards and then determined the costs of those technologies. In making our estimates, we have relied on our own technology assessment which included publicly available information such as that developed by California, confidential information supplied by individual manufacturers, and the results of our own in-house testing.

In general, we expect that heavy-duty gasoline vehicles would (like Tier 2 light duty vehicles) be able to meet these standards through refinements of current emissions control components and systems rather than through the widespread use of new technology. More specifically, we anticipate a combination of technology upgrades such as the following:

- Improvements to the catalyst system design, structure, and formulation, plus an increase in average catalyst size and loading.
- Air and fuel system modifications including changes such as improved oxygen sensors, and calibration changes including improved precision fuel control and individual cylinder fuel control.
- Exhaust system modifications, possibly including air gapped components, insulation, leak free exhaust systems, and thin wall exhaust pipes.
- Increased use of fully electronic exhaust gas recirculation (EGR).
- Increased use of secondary air injection.
- Use of ignition spark retard on engine start-up to improve upon cold start emission control.
- Use of low permeability materials and minor improvements to designs, such as the use of low-loss connectors, in evaporative emission control systems.

We expect that the technologies needed to meet the heavy-duty gasoline standards will be very similar to those required to meet the Tier 2 standards for vehicles over 8,500 pounds GVWR. Few heavy-duty gasoline vehicles currently rely on technologies such as close coupled catalysts and secondary air injection, but we expect they would to meet the new standards.

For each group we developed estimates of both variable costs (for hardware and assembly time) and fixed costs (for R&D, retooling, and certification). Cost estimates based on the current projected costs for our estimated technology packages represent an expected incremental cost of vehicles in the near-term. For the longer term, we have identified factors that would cause cost impacts to decrease over time. First, since fixed costs are assumed to be recovered over a five-year period, these costs disappear from the analysis after the fifth model year of production. Second, the analysis incorporates the expectation that manufacturers and suppliers would apply ongoing research and manufacturing innovation to making emission controls more effective and less costly over time. Research in the costs of manufacturing has consistently shown that as manufacturers gain experience in production and use, they are able to apply innovations to simplify machining and assembly operations, use lower cost materials, and reduce the number or complexity of component parts.[186] These reductions in production costs are typically associated with every doubling of production volume. Our analysis incorporates the effects of this ''learning curve'' by projecting that a portion of the variable costs of producing the new vehicles decreases by 20 percent starting with the third year of production. We applied the learning curve reduction only once since, with existing technologies, there would be less opportunity for lowering production costs than would be the case with the adoption of new technology. We did not apply the learning curve reduction to precious metal costs, nor did we apply it for the evaporative standards.

We have prepared our cost estimates for meeting the new heavy-duty gasoline standards using a baseline of current technologies for heavy-duty gasoline vehicles and engines. Finally, we have incorporated what we believe to be a conservatively high level of R&D spending at $2,500,000 per engine family where no California counterpart exists. We have included this large R&D effort because calibration and system optimization is likely to be a critical part of the effort to meet the standards. However, we believe that the R&D costs may be generous because the projection probably underestimates the carryover of knowledge from the development required to meet the light-duty Tier 2 and CARB LEV–II standards.

Table V.B–1 provides our estimates of the per vehicle cost for heavy-duty gasoline vehicles and engines. The near-term cost estimates in Table V.B–1 are for the first years that vehicles meeting the standards are sold, prior to cost reductions due to lower productions costs and the retirement of fixed costs. The long-term projections take these cost reductions into account.

TABLE V.B–1.—PROJECTED INCREMENTAL SYSTEM COST AND LIFE CYCLE OPERATING COST FOR HEAVY-DUTY GASOLINE VEHICLES

[Net Present Values in the year of sale, 1999 dollars]

Vehicle class	Model year	Incremental system cost	Life-cycle operating cost
Heavy-Duty Gasoline	near term	$198	$0
	long term	167	0

[186] See Chapter V of the final Tier 2 Regulatory Impact Analysis, contained in Air Docket A–97–10.

2. Operating Costs Associated With Meeting the Heavy-Duty Gasoline Standard

Low sulfur gasoline is a fundamental enabling technology which will allow heavy-duty gasoline vehicles to meet the very low emission standards being finalized today. The low sulfur gasoline required under the Tier 2 proposal will enable advanced exhaust emission control for heavy-duty vehicles as well. Today's final rule puts no additional requirements on gasoline sulfur levels and as such should not increase gasoline fuel costs. Additionally, the new technologies being employed in order to meet the new standards are not expected to increase fuel consumption for heavy-duty gasoline vehicles. In fact, there may be some small improvement in fuel economy from the application of improved fuel and air control systems on these engines. Therefore, in the absence of changes to gasoline specifications and with no decrease in fuel economy, we do not expect any increase in vehicle operating costs.

C. Cost of Fuel Change

We estimate that the overall net cost associated with producing and distributing 15 ppm diesel fuel, when those costs are allocated to all gallons of highway diesel fuel, will be approximately 5.0 cents per gallon in the long term, or an annual cost of roughly $2.2 billion per year once the program is fully effective starting June 1, 2010. During the initial years under temporary compliance option, the overall net cost is projected to be 4.5 cents per gallon, or an annual cost of roughly $1.7 billion per year.

This cost consists of a number of components associated with refining and distributing the new fuel. The majority of the cost is related to refining. From 2006–2010, refining costs are estimated to be approximately 3.3 cents per gallon of highway diesel fuel (4.1 cents per gallon for that portion produced to the 15 ppm standard), increasing to 4.3 cents per gallon once the program is fully in place. In annual terms, the 2006–2010 refining costs are expected to be about $1.4 billion per year, increasing to about $1.8 billion in 2011. These figures include the cost of producing slightly more volume of diesel fuel because: (1) Desulfurization decreases the energy density of the fuel and (2) slightly more highway diesel fuel is expected to be downgraded to nonroad diesel fuel in the distribution system.

A small cost of 0.2 cents per gallon is associated with an anticipated increase in the use of additives to maintain fuel lubricity. Also, distribution costs are projected to increase by 1.0 cents per gallon during the initial years under the temporary compliance option, including the cost of distributing slightly greater volumes of fuel. Together, these two cost components only amount to about $0.5 billion per year beginning in 2006. These costs drop to only about $0.3 billion in 2011.

As discussed in Sections V.A. and V.C.5, operation with 15 ppm sulfur diesel fuel is expected to reduce average vehicle maintenance costs by approximately 1 cent on a per gallon basis. Beginning in 2011, this reduction in maintenance costs will total roughly $400 million per year. All of these cost estimates are discussed in more detail below and in the RIA.

1. Refinery Costs

As explained in Section IV, EPA believes that refiners will meet the 15 ppm sulfur standard through an extension of the same hydrotreating technology which is used today to meet the current 500 ppm sulfur standard. Meeting the new standard will generally require refiners to install additional hydrotreating equipment. Most refiners are expected to add another hydrotreating reactor and other related equipment to their existing desulfurization unit. However, we project that some refiners, roughly 20 percent, will conclude that it is not economical to add onto their existing unit and will instead build an entirely new hydrotreater.

Consistent with our analysis for the NPRM, we estimate that a refinery's diesel fuel will have to average 7 ppm in order to consistently meet the 15 ppm standard. For the NPRM, we estimated the cost of producing highway diesel fuel with a 7 ppm average sulfur level for the average U.S. refinery. We received a number of comments on the NPRM which indicated that the cost for various refiners would differ dramatically, as would the cost of treating the various blendstocks which comprise highway diesel fuel. In response, we extended our refining cost model to be specific to each refinery in the U.S., based on a refinery's production volume and estimated composition of its highway diesel fuel. Using this model, we estimated each refinery's cost of producing 7 ppm sulfur highway diesel fuel and then aggregated these results to estimate a national average cost.

This analysis considers the fact that some diesel fuel blendstocks are more difficult to desulfurize than others. As indicated in some comments on the NPRM, this could lead refiners to shift their blendstocks between highway diesel fuel and other distillate products in order to minimize costs. For example, our analysis found that the incremental cost of desulfurizing current highway diesel fuel can be more expensive for some refiners than the cost to other refiners of desulfurizing nonroad diesel fuel to meet the 15 ppm standard, despite the fact that the current sulfur level of nonroad diesel fuel is roughly 2500–3000 ppm.

We evaluated costs under two scenarios: (1) all current producers of highway diesel fuel continued to do so, and (2) some refiners increase production of highway diesel fuel and some refiners facing higher desulfurization costs leave the highway diesel fuel market. Our cost projections presented below are based on the first scenario. This is conservative, because in this scenario, some refineries currently produce relatively low volumes of highway diesel fuel and would face relatively high costs per gallon to desulfurize this same volume of fuel.

We project that the average refining cost to meet the 15 ppm cap standard will be 4.3 cents per gallon, including capital costs amortized at 7 percent per year before taxes, once the standard is fully in place in June, 2010. Refining costs will be lower, 4.1 cents per gallon of 15 ppm fuel (or 3.3 cents per gallon of all highway diesel fuel), during optional compliance provisions (2006–2010), because we expect that those refiners facing the lowest cost of meeting the standard in each PADD will invest to produce the new fuel. We project that refiners will invest $3.8 billion in new equipment in order for about 80 percent of highway diesel fuel to meet the 15 ppm standard in 2006. An additional $1.4 billion will be invested for the rest of the highway diesel fuel market to meet the new standard in 2010, for a total capital cost of $5.2 billion. The average refinery is projected to spend about $43 million in capital costs, and $7 million per year in operating costs.

Table V.C–1 shows the range of average costs per refinery by PADD. Despite the varying size of refineries and differences in their available distillate blendstocks, the variations in the average cost between PADDs in either 2006 or 2010 are small, with the exception of PADD 4. PADD 4 average costs are 30–40 percent higher than the costs in the other PADDs.

TABLE V.C–1.—AVERAGE REFINING COSTS BY PADD (CENTS PER GALLON OF 15 PPM FUEL)

	2006	2010
PADD 1	4.4	4.7
PADD 2	4.3	4.5
PADD 3	3.8	3.9
PADD 4	5.1	5.3
PADD 5	4.2	4.5
U.S. Average	4.1	4.3

A number of other estimates of the cost of the 15 ppm sulfur standard were submitted as part of the comments. Mathpro used a notional refinery model to estimate the national average costs of the proposed standard for EMA. Charles River Associates (CRA), along with Baker and O'Brien, used the Prism refinery model to estimate the cost for each refinery in the U.S. for API. Finally, EnSys used the Oak Ridge National Laboratory PADD 3 refinery model to estimate costs for DOE. Table V.C–2 summarizes these estimates after adjusting the projected costs to represent a 7 percent rate of return on investment before taxes (except for the CRA cost, which could not be adjusted).

TABLE V.C–2.—COMPARISON OF NATIONAL AVERAGE REFINING COST ESTIMATES

[7 percent rate of return on investment before taxes]

	Average cost (cents per gallon of 15 ppm fuel)	Capital cost ($ billion)
EPA (Full program)	4.4	5.3
Methpro for EMA*	4.2–6.1	3.4–6.1
CRA for API (10% after tax rate of return)	6.2	—
EnSys for DOE (conservative technology)* †	5.1–6.0	3.9–6.5
EnSys for DOE (optimistic technology)* †	4.2–4.4	2.7–4.5

* Lower end of range assumes 100 percent revamped equipment; upper end assumes all new equipment.

† Costs are only for the Gulf Coast refining region, which have slightly lower per-gallon costs than the entire U.S., and about half the capital costs.

The costs estimated by Mathpro are the most similar to those estimated by EPA. This is primarily because the desulfurization technology projected to be used were similar in the two studies.

CRA projected the use of similar technology, but estimated that 40 percent of refiners would build new desulfurization units, versus our estimate of 20 percent. CRA also assumed that technology vendors are inherently optimistic in their projections and increased their projected costs by roughly 20 percent. CRA also projected that nonroad diesel fuel sulfur levels would be capped at 500 ppm. How this affected the projected cost of producing 15 ppm fuel is not clear. CRA assumed that this 500 ppm fuel would be produced by blending 8 ppm sulfur highway diesel fuel and 3000 ppm heating oil. Much of this production was assumed to occur due to mixing in the distribution system. An unknown amount of 500 ppm fuel was produced at refineries. Desulfurization costs are not linear, as shown by CRA's own study. Thus, any blending of 15 ppm sulfur highway diesel fuel with non-desulfurized heating oil at refineries was much more costly than simply hydrotreating nonroad diesel fuel to 500 ppm. It also required refiners to hydrotreat the most difficult blendstocks at a much higher cost. Because of these significant differences in both methodology and assumptions, it is not surprising that CRA's costs would be higher than those estimated by Mathpro or ourselves.

EnSys's cost estimates require some explanation due to the number of scenarios they analyzed. EnSys did not estimate how many refiners would build new desulfurization units and how many would modify their current hydrotreaters, but simply presented costs if refiners took one approach or the other. Thus, the lower limits of the ranges shown in Table V.C–2 assume refiners modify their current hydrotreaters, while the upper limits assume that refiners would build new units. EnSys also projected costs for two separate sets of technologies. One set was considered conservative and relied on technologies that are already in commercial use. The other was considered to be optimistic and was similar to that projected to be used by EPA, Mathpro and CRA. EnSys' costs using the conservative technology are higher than our estimates. This is due to the fact that this technology involves greater capital investment and greater consumption of hydrogen. These greater costs are due to the fact that this technology is not just designed to reduce sulfur, but to reduce aromatic content, increase cetane levels and perform some cracking. EnSys' costs using the optimistic technology are much more similar to those of EPA and Mathpro, considering that EnSys' range of costs reflects both revamped and new desulfurization units and that EPA's costs are dominated (80 percent) by revamped units.

Some of the variation in the costs projected by the various studies involves uncertainty in exactly what degree of hydrotreating will be necessary to meet the 15 ppm sulfur standard day in and day out with a variety of distillate feedstocks. As discussed in Section IV above, there is currently no commercial experience in the U.S. and only a limited amount of information in the public literature on the costs associated with reducing the sulfur level in diesel fuel to very low levels on an ongoing operational basis. Thus, any cost projections involve a significant amount of uncertainty.

2. Highway Diesel Fuel Supply

While API and many refiners did not question the feasibility of the 15 ppm standard, they did indicate that the cost would be higher than that projected by EPA. API believes that those refiners facing higher than average costs may decide to leave the highway diesel fuel market. They argue this is especially a possibility if they are faced with a sulfur standard below a 30 ppm average (or 50 ppm cap), which they believe will require very large investments for high pressure hydrotreating to maintain current highway diesel production volumes. API also believes that many refiners may reduce their production of highway diesel fuel, by switching the feedstocks (i.e., LCO) which are most difficult to desulfurize to other markets,

thus avoiding the higher investments associated with high pressure hydrotreating. If some refiners reduce highway diesel fuel production, that could present an opportunity for other refiners, who choose to make the investment, of higher prices for the new 15 ppm sulfur product.

This view is embodied by a study by Charles River Associates (CRA) and Baker and O'Brien which was commissioned by API. CRA polled refiners concerning their plans under a 15 ppm sulfur cap. Using the results of this survey, as well as other information, CRA projected refiners' costs of meeting the 15 ppm standard, as well as their likely production volumes. CRA concluded that U.S. refiners would likely reduce their highway diesel fuel production by an average of 12 percent, creating significant shortages and price spikes.

CRA's conclusions appear to have been strongly affected by their assumptions, as well as the refiner survey they conducted. For example, CRA assumed that the new sulfur standard would cause 10 percent more highway diesel fuel to be ''lost'' in the distribution system compared to today (i.e., downgraded to off-highway diesel fuel). We believe based on the analysis outlined in the RIA that 2.2 percent is a more accurate estimate, resulting in 9 percent more 15 ppm fuel being available than CRA estimated. This difference alone accounts for 75 percent of the potential national supply shortfall projected by CRA.

CRA also concluded, with little explanation, that 20 refineries producing highway diesel fuel today would not produce highway diesel fuel under the 15 ppm standard and that many more would reduce production. Given the lack of information provided in the study, it was not possible to evaluate CRA's criteria in selecting these 20 refineries, nor was it possible to determine how much of the shortfall was attributable to this conclusion. While CRA evaluated whether refiners currently producing highway diesel fuel would be likely to leave the market, they did not assess whether any refineries currently not producing highway diesel fuel might enter the market. EPA did conduct such an assessment. We found 2 refineries that produce essentially no highway diesel fuel today which could meet the new standard for less than 5 cents per gallon. Production from these refineries would increase highway diesel fuel production by 9 percent. We also found based on our assessment that 4 other refineries could produce highway diesel fuel from their off-highway diesel fuel blendstocks for less than 5 cents per gallon. Production from these 6 refineries would increase highway diesel fuel production by 7 percent. Together with a more reasonable estimate of downgrades in the distribution system, this would more than compensate for any potential lost production, even as estimated by CRA.

CRA also implicitly assumed that the material it projected could be removed from the highway diesel market could be sold at a reasonable price. However, CRA did not analyze the impact of this additional supply on the prices which could be obtained in these markets, or even if these alternative markets could physically absorb all of this material. Much of this material is not diesel fuel, but poor quality blendstock. It is not clear that such material could be blended into non-highway diesel fuel and CRA did not analyze this likely problem. Our analyses, supported by a study by Muse, Stancil and Co., indicate that any substantial quantities of highway diesel fuel diverted to other markets will depress prices in those markets substantially.[187] Hydrotreating diesel fuel to meet the 15 ppm standard avoids these depressed prices, reducing the net cost of meeting the new standard. Since CRA only considered the cost to desulfurize highway diesel fuel, and ignored the added cost of dumping this fuel into markets with depressed prices, CRA's conclusions must be considered to be seriously flawed in this regard.

Furthermore, CRA ignored the fact that roughly 15 percent of today's highway diesel fuel is consumed in engines and furnaces not requiring this fuel. Any shortage of highway diesel fuel would lead many of these non-essential users to switch to nonroad diesel fuel or heating oil. Only limitations in the fuel distribution system would cause these users to continue to burn highway diesel fuel.

These problems with CRA's analysis, plus the lack of detail available concerning the specifics of the study, lead us to reject the study's conclusions that there will be significant supply shortfalls under a 15 ppm sulfur standard.

Finally, if any potential for highway diesel fuel shortfalls exists by requiring all fuel to meet 15 ppm sulfur in 2006, as CRA's analysis suggests, we believe that allowing some continued supply of 500 ppm, as we are doing under the temporary compliance option and hardship provisions contained in today's action, addresses this concern. Since the final rule allows some transition period before the entire highway diesel pool is required to meet the 15 ppm sulfur standard, some refiners will not need to change their current operations and will be able to continue producing 500 ppm fuel during these years. Those refiners that delay production of low sulfur diesel fuel until the later years of the program will tend to be the refiners with the highest cost to comply and, thus, refiners that would otherwise have the greatest tendency not to invest and thereby impact supply. Refiners that begin producing low sulfur diesel fuel in the later years of the program will also be able to take advantage of ongoing improvements in desulfurization technology. Together, these factors will help avoid or reduce any potential losses in highway diesel fuel production when the program requires full compliance with low sulfur diesel fuel.

As mentioned above, EPA agrees that some refiners will face higher desulfurization costs than others. This is generally the case with any fuel quality regulation, since the crude oils processed by, as well as the configurations and product slates of individual refineries vary dramatically. As mentioned above and summarized in the RIA, we used our refining cost model to assess the likelihood that refiners would leave the highway diesel fuel market or reduce their production of highway diesel fuel. We also assessed the likelihood of other refiners entering this market. We found that a number of refiners appear to be in a position to expand their highway diesel fuel production capacity very economically relative to other refiners facing higher desulfurization costs. We also found that up to 2 refineries not now producing highway diesel fuel could easily enter the highway diesel fuel market at very competitive costs.

Some refiners may have an alternative market for their diesel fuel. In the extreme, a refiner would likely prefer to only shift his light cycle oil to other distillate products, like nonroad diesel fuel and No. 2 heating oil, retaining his other blendstocks in the higher value highway diesel fuel market. However, in many cases, a refiner cannot shift light cycle oil directly to a distillate product, because the resulting non-highway fuel would no longer meet applicable specifications, such as sulfur or cetane. In most cases, we expect that the refiner must shift highway diesel fuel to alternative markets in order to be able to obtain a reasonable price.

As mentioned above, Muse, Stancil, & Co. analyzed the ability of refiners to

[187] ''Alternate Markets for Highway Diesel Fuel Components,'' Muse, Stancil & Co., for Southwest Research Institute, for U.S. EPA, September, 2000.

divert highway diesel fuel or its blendstocks to other distillate markets. Muse, Stancil found that this ability varied significantly by PADD. In PADDs II and IV, it would be difficult for refiners to move any appreciable quantity of highway diesel fuel to other markets. For example, compared to the value of highway diesel fuel today, the achievable value for the diverted material would decrease by 14 to 20 cents per gallon if refiners tried to move more than 5 percent of their highway diesel fuel to other markets. The loss in value was highest in these two PADDs, because growth in nonroad diesel fuel consumption is small or negative, the ability to reduce the consumption of highway diesel fuel by users other than highway vehicles was limited, and exports are only available through the Gulf or West Coasts with a large transportation cost of getting the material there.

In PADDs III and V, the loss of value was lower, at 4.5–5 cents per gallon and was the lowest in PADD I, 2 cents per gallon. This was primarily because of the ability to export high sulfur diesel fuel overseas. Generally, these losses in value apply if diesel fuel was being diverted to other distillate markets. If light cycle oil was being diverted, the value would drop an additional 3–3.5 cents per gallon.

At lower levels of diversion (e.g., 5 percent or less), the loss in value was much less, ranging from 1.6–5 cents per gallon across the five PADDs. However, the primary reason for this was the reduced use of highway diesel fuel by users other than highway vehicles, who do not require this fuel. Muse believed that such conversions were limited, but real and could represent roughly a third of the current use of highway diesel fuel in other than highway vehicles. If this occurs, then demand for highway diesel fuel drops at the same time. Thus, in this case, the total refining costs associated with the new sulfur standard will decline because the total amount of fuel; needing to be desulfurized will decrease.

The only area where refiners could easily divert substantial amounts of highway diesel fuel is PADD I. PADD I refiners currently produce a relatively low amount of highway diesel fuel and substantial amounts of high sulfur diesel fuel/heating oil are imported. Thus, refiners in PADD I facing relatively high costs of meeting the 15 ppm standard could shift some or all of their highway diesel fuel to other markets, reducing imports and not substantially affecting prices in this market.

In the end, refiners will make their decisions regarding investment based on their projections of demand of 15 and 500 ppm diesel fuel, the prices of these fuels and the prices available in alternative markets. At this time, we do not project that the specifics involved in this case (technology, cost, alternative markets) are significantly different from those which have existed in the past. The last time EPA regulated diesel fuel, the refining industry actually overbuilt desulfurization capacity for the current 500 ppm standard, as evidenced by the significant use in the nonroad market of diesel fuel produced to the current highway diesel sulfur standard of 500 ppm and the relatively low price of highway diesel fuel relative to nonroad diesel fuel. Some of this overproduction may have been due to limitations in the distribution system to distribute both highway and nonroad grades of diesel fuel. However, the refinery system as a whole was able to supply both highway diesel vehicles, plus the use of highway diesel fuel by other users. This was accomplished despite the fact that a number of small refiners did decide to switch from the highway diesel fuel market to the nonroad diesel fuel market, presumably for economic reasons.

3. Cost of Lubricity Additives

As discussed in Section IV, the refinery processes needed to achieve the sulfur standard have some potential to degrade the natural lubricity characteristics of the fuel. Consequently, an increase in the use of lubricity additives for diesel fuel may be anticipated over the amounts used today. As described in more detail in the Regulatory Impact Analysis in the Public Docket, we include in our fuel cost estimate an average cost of 0.2 cents per gallon for lubricity additives over the entire pool of low sulfur highway diesel fuel (the same cost estimate as used in the proposal). This estimate is comparable to an estimate made by Mathpro in a study sponsored by the Engine Manufacturers Association, and is consistent with the cost estimate submitted by Cummins in its comments.

Prior to the proposal, we contacted various producers of lubricity additives to get their estimates of what costs might be incurred for this increase in the use of lubricity additives. The cost estimates varied from 0.1 to 0.5 cents per gallon. The cost is likely to be a strong function of not only the additive type, but also the assumed treatment rate and the volume of fuel that needs to be treated, both of which will be, to some extent, a function of the sulfur cap. We requested comment on our cost estimate, including whether there may be unique costs for the military to maintain the lubricity of their distillate fuels. We requested that comments addressing this issue include a detailed discussion of the volumes of fuel affected, current lubricity additive use, and the additional measures that might be needed (and associated costs) to maintain the appropriate level of fuel lubricity. In response to the proposal, we received few comments on the cost of lubricity additives, and none on the volumes of fuel affected, current lubricity additive use, or additional measures that might be needed to maintain the appropriate level of lubricity. In considering the comments, we have found no basis in today's action to use a different average cost estimate to treat low sulfur diesel for lubricity than that which was used in the proposal (0.2 cents per gallon). See more discussion in the Response to Comments Document in the Public Docket.

4. Distribution Costs

We estimate that as a result of today's rule, distribution costs will increase by 0.5 cents per gallon of highway diesel fuel supplied when the sulfur requirements are fully implemented beginning in the year 2010. During the initial years (2006 through May 31, 2010) we estimate that the increase in distribution costs will be 0.4 cents per gallon of highway diesel fuel supplied, with an additional 0.7 cents per gallon equivalent related to capital costs for additional storage tanks to handle two grades of highway diesel fuel.[188]

In the proposal, we estimated that distribution costs would increase by 0.2 cents per gallon if the proposed requirement that the entire highway diesel fuel pool meet a 15 ppm sulfur cap beginning in 2006 be adopted. This cost was comprised of roughly 0.1 cents per gallon due to an increase in pipeline interface and testing costs, and 0.1 cents per gallon for distributing the additional volume of highway diesel fuel needed due to an anticipated decrease in fuel energy density as a side effect of reducing the sulfur content to the proposed 15 ppm cap. The case evaluated in the NPRM is most similar to that for the fully implemented sulfur program in this final rule.

We took advantage of additional information contained in the comments to the NPRM in formulating a more comprehensive estimate of the

[188] This cost is expressed in terms of the total volume of highway diesel fuel supplied, including the fuel which meets the 15 ppm sulfur cap and that which meets the 500 ppm sulfur cap.

distribution costs under today's rule. In some cases this involved adjusting an estimate for a parameter that factored into our calculation of costs in the NPRM. One important example is that we increased our estimate of the additional volume of highway diesel shipped by pipeline that would need to be downgraded to a lower-value product. This product downgrade is necessitated by mixing that takes place between products that abut each other while in the pipeline. The mixture is referred to as interface when it can be blended into another product and transmix when it must be returned to the refinery for reprocessing. In other cases, our reevaluation of distribution costs included the consideration of parameters that did not factor into the estimation of distribution costs in the proposed rule. For example, commenters to the NPRM brought to our attention that there would be additional costs associated with needed changes in the handling practices for interface volumes which result from shipments of jet fuel and highway diesel fuel that abut each other in the pipeline.

There are a number of common factors in the estimation of distribution costs during the initial period and after the sulfur requirements are fully implemented, such as the increase in interface volumes for pipeline shipments of highway diesel fuel. However, there are other factors that are unique to the estimation of costs during the initial years as well. For example, with two grades of highway diesel fuel in the distribution system at the same time there are costs associated with the need for additional storage tanks at some petroleum terminals and refineries. Our estimation of distribution costs under these two periods is discussed separately in the following sections. Where there is a commonality, the issue is discussed under the section on distribution costs for the fully implemented program.

a. Distribution Costs Under the Fully Implemented Program

Based on the considerations discussed below, we estimate that the increase in distribution costs under the fully implemented sulfur program will be 0.5 cents per gallon of highway diesel fuel supplied.

The cost of distributing the additional volume of highway diesel fuel needed to compensate for the lower energy density of highway diesel fuel that meets a 15 ppm sulfur cap is estimated at 0.17 cents per gallon of highway diesel fuel supplied. As in the NPRM, the cost of producing this additional volume was included in the calculation of refinery costs (see Section V.C.1.). In the NPRM, we estimated that the cost of distributing highway diesel fuel was equal to the difference in price at the refinery rack and the retail price. For today's final rule, we based our estimate of distribution cost on a PADD by PADD evaluation of the difference in the price of highway diesel fuel at the refiner rack versus the retail price. The price differential for each PADD was weighted by the additional volume of fuel we anticipate will need to be produced in each PADD to arrive at an estimate of distributing the additional volume needed for the nation as a whole. We believe this approach provides a more accurate estimate of costs.

Based on additional information provided in the comments on the changes in pipeline interface practices that would result from today's rule, we adjusted our estimate of the increased volume of highway diesel fuel that would be downgraded to a lower-value product from 1.5 percent to 2.2 percent of highway diesel fuel supplied (see the RIA to this rule). As in the NPRM, the cost of producing this additional volume was included in the calculation of refinery costs (see Section V.C.1.). The cost of downgrading the increased volume of highway diesel fuel to a lower-value product is based on the difference in the cost of 15 ppm sulfur diesel fuel and the product to which the interface is downgraded. Under the fully imlemented program, this downgrade would be made into the nonroad diesel pool. The cost of this increased volume of downgrade is estimated at approximately 0.14 cents per gallon of highway diesel supplied.

We identified that there would also be an increase in the economic impact for the existing volume of interface currently associated with pipeline shipments of highway diesel fuel. This is because the cost of downgrading the existing interface volume would be determined by the difference between the cost of 15 ppm sulfur fuel and nonroad diesel fuel rather than the difference in cost between current 500 ppm diesel fuel and nonroad diesel fuel as it is today. We estimate that the increase in the cost of downgrading the existing highway diesel interface would be 0.09 cents per gallon of highway diesel fuel supplied.

We anticipate that there may be minor costs in addition to those discussed above associated with optimizing the distribution system to adequately limit sulfur contamination. These costs could result from various minor changes to distribution practices and or hardware discovered to be needed by industry while preparing to comply with today's rule. While it is not possible to specifically identify the nature of these changes, they could include the occasional replacement of a leaking valve or improvements in communication practices to facilitate batch changes in the pipeline system. There may also be some cost associated with the process that we anticipate the distribution industry will undertake to evaluate its readiness to comply with the requirements in today's rule. Such costs might result from testing to determine the level of contamination introduced through the use of various distribution hardware or practices. It is not possible to specifically identify the costs that might be associated with this optimization process. However, given the limited nature of the changes that might be needed and that the need for such changes would not be widespread, we believe that the associated costs would not pose a substantial burden. We estimate that the miscellaneous costs associated with optimizing the distribution system to limit sulfur contamination would be 0.025 cents per gallon of highway diesel fuel supplied (on average) during the period from when the sulfur program is fully implemented (2010) through the year 2020. These costs were amortized at a rate of 7% over the period of 2006 through 2020. The per gallon cost is somewhat higher during the initial years.

Commenters to the proposed rule stated that it is current practice for all of the interface generated when highway diesel fuel abuts jet fuel in the pipeline to be cut into highway diesel fuel. They pointed out that this practice would no longer be possible when all highway diesel fuel is required to meet a 15 ppm sulfur cap because of the relatively high sulfur content of jet fuel (as high as 3000 ppm).[189] They stated that the mixture of highway diesel fuel meeting a 15 ppm sulfur cap and jet fuel would need to be returned from the terminal to the refinery for reprocessing, at high cost (*i.e.* would need to be treated as transmix). While we agree that handling procedures for this mixture will need to change, we believe that it will not be necessary to treat it as transmix. We believe that there will be opportunity for the mixture to be sold from the terminal into the nonroad diesel pool. This will increase the cost associated with downgrading this mixture.

[189] During the initial years of the sulfur program, the current practice used to handle the interface between shipments of jet fuel and highway diesel fuel can be used for that portion of the highway diesel fuel that continues to meet a 500 ppm sulfur cap.

Expressed in terms of the volume of highway diesel fuel supplied, we estimate this cost at 0.07 cents per gallon. Additional storage tanks will be needed to handle the mixture at those terminals that currently do not handle nonroad diesel fuel. The cost of these tanks has been fully accounted for in the calculation of costs during the initial years of the program.

The additional quality control testing at the terminal level needed to ensure compliance with the 15 ppm sulfur cap would be the same during the initial years as after the requirements are fully implemented. We estimate that the cost of this additional testing would be as we projected in the proposal, 0.002 cent per gallon of highway diesel supplied (see the RIA to this rule).

We believe that there will not be a significant increase in the volume of highway diesel fuel discovered to exceed the sulfur standard downstream of the refinery as a result of today's rule. We believe this will be the case both during the initial years and after the sulfur requirements are fully implemented. We anticipate that distributors will quickly optimize their practices to avoid sulfur contamination. We also anticipate that distributors will gain some experience in reducing sulfur contamination in the distribution system through complying with the recently finalized Tier 2 low sulfur gasoline requirements (65 FR 6698, February 10, 2000). While outside the scope of this final rule, it is worth pointing out that potential difficulties in distributing 15 ppm diesel fuel would be lessened if the sulfur content of nonroad diesel fuel is reduced by a future rulemaking (as discussed in Section 8). We anticipate that the batches of highway diesel fuel that are discovered to exceed the 15 ppm sulfur cap will be coped with as follows:

—When possible, by blending highway diesel fuel that is below the 15 ppm cap with the out-of-specification batch to bring the resulting mixture into compliance. This practice will be more difficult than it is currently because the amount of fuel needed to blend the out-of-specification batch into compliance may increase. However, we expect it to continue to be the method of choice for handling out-of-specification highway diesel whenever possible.

—By downgrading the batch either to nonroad diesel fuel or to 500 ppm highway diesel during the initial years.

—By reprocessing the batch to meet the 15 ppm cap, but only in those infrequent instances where the previous options do not exist.

We do not believe that the cost of handling out-of specification highway diesel batches will increase significantly as a result of today's action.

Tank truck, tank wagon, and barge operators may need to more carefully and consistently observe current industry practices to limit contamination in some situations. However, these situations are more the exception than the rule and are of a limited nature. Consequently, we believe that this can be accomplished at an insignificant cost. Additional considerations exist for distributors during the initial years as discussed in the following section.

Please refer to the Response to Comments Document for an evaluation of the comments received on the increase in fuel distribution costs associated with today's rule, and to the RIA for a detailed discussion of the way in which we derived the our cost estimates.

b. Distribution Costs During the Initial Years

The factors that cause distribution costs to differ during the initial years include:

—Having a lesser volume of 15 ppm diesel fuel in the system reduces the costs associated with distributing 15 ppm fuel.

—Having an additional grade of highway diesel fuel in the system (500 ppm) creates additional pipeline interface volumes, and additional product downgrade costs.

—The need for additional equipment to handle an additional grade leads to additional costs that must be accounted for during the initial years.

—Having 500 ppm highway diesel fuel in the system allows some opportunity for the pipeline interface volumes associated with the shipment of 15 ppm fuel and jet fuel to be downgraded to 500 ppm diesel fuel rather than nonroad diesel fuel. This will reduce the cost associated with downgrading the subject interface volumes.

In calculating the distribution costs for the initial years of the program, we estimated that 60 percent of the 15 ppm highway diesel fuel shipped by pipeline will be carried in pipelines that choose not to carry 500 ppm diesel fuel. We estimated that the remaining 40 percent of 15 ppm highway diesel fuel shipped by pipeline would be carried in pipelines that carry 500 ppm as well as nonroad diesel fuel. For the sake of simplicity and to allow a comparison with distribution costs when the program is fully implemented, the distribution costs during the initial years as discussed below are expressed in terms of the total volume of highway diesel fuel supplied. This includes 500 ppm as well as 15 ppm highway diesel fuel.

For the reasons outlined above, the following costs, which are also present under the fully implemented sulfur program, were adjusted to reflect the unique conditions during the initial years. During the initial years, the cost of distributing the additional volume of highway diesel fuel needed to compensate for lower energy density of 15 ppm sulfur fuel is estimated at 0.14 cents per gallon of highway diesel fuel supplied. The cost of the increased volume of highway diesel fuel that must be downgraded to a lower-value product is estimated at 0.1 cents per gallon of highway diesel supplied. We estimate that during the initial years of the program the increase in the cost of downgrading the existing highway diesel interface would be 0.08 cents per gallon of highway diesel fuel supplied. During the initial years, the cost of downgrading the interface between pipeline shipments of jet fuel and highway diesel fuel is estimated to increase by 0.03 cents per gallon of highway diesel fuel supplied. The cost of the additional tanks required at terminals to handle this interface is estimated at 0.009 cents per gallon of highway diesel fuel supplied. This tank cost was amortized over the period of the four-year transition period. We estimate that the miscellaneous costs associated with optimizing the distribution system to limit sulfur contamination would be 0.027 cents per gallon of highway diesel fuel supplied (on average) during the initial period (2006—2010).

As noted in the previous section, the additional quality control testing at the terminal level needed to ensure compliance with the 15 ppm sulfur cap would be the same during the initial years and after the requirements are fully implemented. We estimate that the cost of this additional testing would be as we projected in the proposal, 0.002 cent per gallon of highway diesel supplied.

The cost during the initial years of downgrading the additional interface volumes associated with having two grades of highway diesel fuel in part of the pipeline system is estimated at 0.004 cents per gallon of highway diesel full supplied

The most substantial costs associated with the provisions during the initial years of the program are due to the need to handle an additional grade of highway diesel fuel in the distribution

system. Under the final program, the production of 500 ppm sulfur fuel will be much less than that of 15 ppm fuel. At the same time, most of the diesel vehicle fleet can burn 500 ppm fuel during the initial period. Because of its greater volume and the need to distribute it everywhere in the country, we expect that essentially all pipelines and terminals will handle 15 ppm fuel. In contrast, distribution of 500 ppm fuel will concentrate on those areas nearest the refineries producing that fuel, plus a few major pipelines serving major refining areas.

Regarding distribution to the final user, we expect that nearly all truck stops in areas where 500 ppm fuel is available will invest in piping and tankage to handle a second fuel. Because of the significant expense involved in adding a second tank, in these areas, we expect service stations will only carry one fuel or the other, as market demands dictate. Likewise, we expect that centrally fueled fleets and card locks will only handle 15 ppm fuel. Under this scenario, sales of 500 ppm fuel are limited to only those vehicles which refuel at truck stops and service stations. This is somewhat conservative since some centrally fueled fleets may have the flexibility to inexpensively handle two fuels. Likewise, some card locks in a given area may be able to carry 15 ppm fuel and others 500 ppm fuel and still serve their clients at little extra cost. Still, given the above assumptions, we project that the 500 ppm fuel will have to be distributed to areas representing about 50 percent of the national diesel fuel demand. Also, as the fleet turns over to 2007 and later vehicles during the initial years, the amount of 500 ppm fuel produced will gradually decrease from just over 20 percent in 2007 to about 16 percent in 2010.

The tankage cost at refineries, terminals, pipelines and bulk plants handling both fuels is estimated to be $0.81 billion. The cost for truck stops to handle two fuels is roughly $0.24 billion, for a total cost of $1.05 billion. Amortized over all of the highway diesel fuel supplied during the initial four-years (15 ppm and 500 ppm) at 7 percent per annum, the cost per gallon is 0.7 cents.

5. Benefits of Low-Sulfur Diesel Fuel for the Existing Diesel Fleet

We estimate that the low-sulfur diesel fuel will provide additional benefits to the existing heavy-duty vehicle fleet as soon as the fuel is introduced. We believe these benefits will offer significant cost savings to the vehicle owner without the need for purchasing any new technologies. The RIA has catalogued a variety of benefits from the low-sulfur diesel fuel. These benefits are summarized in Table V.C–3.

TABLE V.C–3.—COMPONENTS POTENTIALLY AFFECTED BY LOWER SULFUR LEVELS IN DIESEL FUEL

Affected components	Effect of lower sulfur	Potential impact on engine system
Piston Rings	Reduce corrosion wear	Extended engine life and less frequent rebuilds.
Cylinder Liners	Reduce corrosion wear	Extended engine life and less frequent rebuilds.
Oil Quality	Reduce deposits and less need for alkaline additives.	Reduce wear on piston ring and cylinder liner and less frequent oil changes.
Exhaust System (tailpipe)	Reduces corrosion wear	Less frequent part replacement.
EGR	Reduces corrosion wear	Less frequent part replacement.

The actual value of these benefits over the life of the vehicle will depend upon the length of time that the vehicle operates on low-sulfur diesel fuel and the degree to which vehicle operators change engine maintenance patterns to take advantage of these benefits. For a vehicle near the end of its life in 2007 the benefits will be quite small. However for vehicles produced in the years immediately preceding the introduction of low-sulfur fuel the savings will be substantial. The RIA estimates that a heavy heavy-duty vehicle introduced into the fleet in 2006 will realize savings of $610 over its life. This savings could alternatively be expressed in terms of fuel costs as approximately 1 cent per gallon as discussed in the RIA. These savings will occur without additional new cost to the vehicle owner beyond the incremental cost of the low-sulfur diesel fuel, although these savings will require changes to existing maintenance schedules. Such changes seem likely given the magnitude of the savings and the nature of the regulated industry.

D. Aggregate Costs

Using current data for the size and characteristics of the heavy-duty vehicle fleet and making projections for the future, the diesel per-engine, gasoline per-vehicle, and per-gallon fuel costs described above can be used to estimate the total cost to the nation for the emission standards in any year. Figure V.D–1 portrays the results of these projections.[190] All capital costs have been amortized.

BILLING CODE 6560–50–P

[190] Figure V.E–1 is based on the amortized engine, vehicle and fuel costs as described in the RIA. Actual capital investments, particularly important for fuels, would occur prior to and during the initial years of the program.

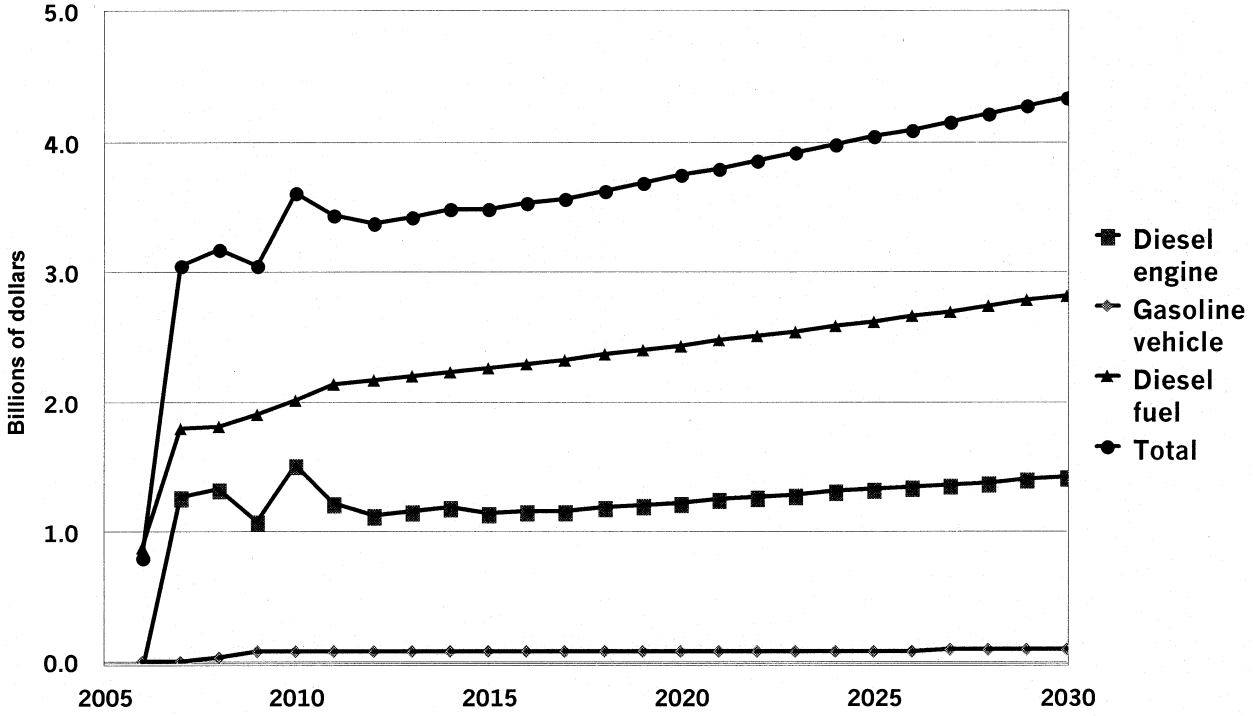

Figure V.D-1 Total Annualized Costs

BILLING CODE 6560–50–C

As can be seen from the figure, the annual costs start out at less than 1.0 billion dollars in year 2006 and increase during the initial years to about $3.6 billion in 2010. Thereafter, total annualized costs are projected to continue increasing due to the effects of projected growth in engine sales and fuel consumption. The RIA provides further detail regarding these cost projections.

Future consumption of 15 ppm diesel fuel may be influenced by a potential influx of diesel-powered cars and light trucks into the light-duty fleet. At the present time, virtually all cars and light trucks being sold are gasoline fueled. However, the possibility exists that diesels will become more prevalent in the car and light-duty truck fleet, since automotive companies have announced their desire to increase their sales of diesel cars and light trucks. For the Tier 2 rulemaking, the Agency performed a sensitivity analysis using A.D.Little's ''most likely'' increased growth scenario of diesel penetration into the light-duty vehicle fleet which culminated in a 9 percent and 24 percent penetration of diesel vehicles in the LDV and LDT markets, respectively, in 2015 (see Tier 2 RIA, Table III.A.–13). Were this scenario to play out, the increased number of diesel-powered cars and light-duty trucks would increase the societal costs (those costs, in total, paid by consumers) for the higher priced diesel fuel because more diesel fuel would be consumed. However, were more diesel vehicles to penetrate the light-duty fleet, less gasoline would be consumed than was estimated in our Tier 2 cost analysis. Also, diesel vehicles tend to get higher fuel economy. As a result, the effect of increased dieselization of the light-duty fleet will likely have little or no impact on the aggregate costs estimated for the standards being finalized in today's action.

E. Cost Effectiveness

One tool that can be used to assess the value of new standards for heavy-duty vehicles and engines is cost effectiveness, in which the costs incurred to reach the standards are compared to the mass of emission reductions. This analysis results in the calculation of a $/ton value, the purpose of which is to show that the reductions from the engine and fuel controls being finalized today are cost effective, in comparison to alternative means of control. This analysis involves a comparison of our program not only to past measures, but also to other potential future measures that could be implemented. Both EPA and States have already adopted numerous control measures, and remaining measures tend to be more expensive than those previously employed. As we and States tend to employ the most cost effective available measures first, more expensive ones must be adopted to achieve further emission reductions.

Comments we received in response to our Notice of Proposed Rulemaking on the subject of our cost effectiveness analysis are addressed in the Response to Comments Document.

1. What Is the Cost Effectiveness of This Program?

We have calculated the cost-effectiveness of our diesel engine/gasoline vehicle/diesel sulfur standards based on two different approaches. The first considers the net present value of all costs incurred and emission reductions generated over the life of a single vehicle meeting our standards. This per-vehicle approach focuses on the cost-effectiveness of the program from the point of view of the vehicles and engines which will be used to meet the new requirements. However, the per-vehicle approach does not capture all of the costs or emission reductions from our diesel engine/gasoline vehicle/diesel sulfur program since it does not account for the use of 15 ppm diesel fuel in current diesel engines. Therefore, we have also calculated a 30-year net present value cost-effectiveness using the net present value of costs and emission reductions for all in-use vehicles over a 30-year time frame. The baseline or point of comparison for this evaluation is the previous set of engine, vehicle, and diesel sulfur standards (in other words, the applicable 2006 model year standards).

As described earlier in the discussion of the cost of this program, the cost of complying with the new standards will decline over time as manufacturing costs are reduced and amortized capital investments are recovered. To show the effect of declining cost in the per-vehicle cost-effectiveness analysis, we have developed both near term and long term cost-effectiveness values. More specifically, these correspond to vehicles sold in years one and six of the vehicle and fuel programs. Chapter VI of the RIA contains a full description of this analysis, and you should look in that document for more details of the results summarized here.

The 30-year net present value approach to calculating the cost-effectiveness of our program involves the net present value of all nationwide emission reductions and costs for a 30 year period beginning with the start of the diesel fuel sulfur program and introduction of model year 2007 vehicles and engines in year 2006. This 30-year timeframe captures both the early period of the program when very few vehicles that meet our standards will be in the fleet, and the later period when essentially all vehicles in the fleet will meet the new standards. We have calculated the 30-year net present value cost-effectiveness using the net present value of the nationwide emission reductions and costs for each calender year. These emission reductions and costs are given for every calendar year in the RIA, in addition to details of the methodology we used to calculated the 30-year net present value cost-effectiveness.

Our per-vehicle and 30-year net present value cost-effectiveness values are given in Tables V.E–1 and V.E–2. Table V.E–1 summarizes the per-vehicle, net present value cost-effectiveness results for our diesel engine/gasoline vehicle/diesel sulfur standards using sales weighted averages of the costs (both near term and long term) and emission reductions of the various vehicle and engine classes affected. Table V.E–2 provides the same information from the program 30-year net present value perspective. It is based on the net present value of the 30 year stream of vehicle and fuel costs and NMHC+ NO_X and PM emission reductions, resulting in the 30-year net present value cost-effectiveness. Diesel fuel costs applicable to diesel engines have been divided equally between the adsorber and trap, since 15 ppm diesel fuel is intended to enable all technologies to meet our standards. In addition, since the trap produces reductions in PM and also operates as an enabling device for the NO_X adsorber, we have divided the total trap costs equally between compliance with the PM standard and compliance with the NO_X and NMHC standards.

Tables V.E–1 and V.E–2 also display cost-effectiveness values based on two approaches to account for the reductions in SO_2 emissions associated with the reduction in diesel fuel sulfur. While these reductions are not central to the program and are therefore not displayed with their own cost-effectiveness, they do represent real emission reductions due to our program. The first set of cost-effectiveness numbers in the tables simply ignores these reductions and bases the cost-effectiveness on only the NO_X, NMHC, and PM emission reductions from our program. The second set accounts for these ancillary reductions by crediting some of the cost of the program to SO_2. The amount of cost allocated to SO_2 is based on the cost-effectiveness of SO_2

emission reductions that could be obtained from alternative, potential future EPA programs. The SO_2 credit was applied only to the PM calculation, since SO_2 reductions are primarily a means to reduce ambient PM concentrations.

TABLE V.E–1.—PER-ENGINE [a] COST EFFECTIVENESS OF THE STANDARDS FOR 2007 AND LATER MY VEHICLES

Pollutants	Discounted lifetime cost effectiveness per ton	Discounted lifetime cost effectiveness per ton with SO_2 credit [b]
Near-term costs:		
NO_X+NMHC	$2,125	$2,125
PM	14,237	7,599
Long-term costs:		
NO_X+NMHC	1,621	1,621
PM	11,340	4,701

[a] As described above, per-engine cost effectiveness does not include any costs or benefits from the existing, pre-control, fleet of vehicles that would use the 15 ppm diesel fuel.
[b] $446 credited to SO_2 (at $4800/ton) for PM cost effectiveness.

TABLE V.E–2.—30-YEAR NET PRESENT VALUE [a] COST EFFECTIVENESS OF THE STANDARDS

	30-year n.p.v. cost effectiveness per ton	30-year n.p.v. cost effectiveness per ton with SO_2 credit [b]
NO_X+NMHC	$2,149	$2,149
PM	13,607	4,195

[a] This cost effectiveness methodology reflects the total fuel costs incurred in the early years of the program when the fleet is transitioning from pre-control to post-control diesel vehicles. In 2007 <10% of highway diesel fuel is anticipated to be consumed by 2007 MY vehicles. By 2012 this increases to >50% for 2007 and later MY vehicles.
[b] $7.1 billion credited to SO_2 (at $4800/ton).

2. Comparison With Other Means of Reducing Emissions

In comparison with other mobile source control programs, we believe that our program represents a cost effective strategy for generating substantial NO_X, NMHC, and PM reductions. This can be seen by comparing the cost effectiveness of today's program with a number of mobile source standards that EPA has adopted in the past. Table V.E–3 summarizes the cost effectiveness of several past EPA actions for NO_X+NMHC. Table V.E–4 summarizes the cost effectiveness of several past EPA actions for PM.

TABLE V.E–3.—COST EFFECTIVENESS OF PREVIOUS MOBILE SOURCE PROGRAMS FOR NO_X+NMHC

Program	$/ton
Tier 2 vehicle/gasoline sulfur	1,340–2,260
2004 Highway HD diesel	212–414
Off-highway diesel engine	425–675
Tier 1 vehicle	2,054–2,792
NLEV	1,930
Marine SI engines	1,171–1,846
On-board diagnostics	2,313
Marine CI engines	24–176

Note: Costs adjusted to 1999 dollars.

TABLE V.E–4.—COST EFFECTIVENESS OF PREVIOUS MOBILE SOURCE PROGRAMS FOR PM

Program	$/ton
Marine CI engines	5222–3881
1996 urban bus	12,264–19,622
Urban bus retrofit/rebuild	30,251
1994 highway HD diesel	20,900–24,467

Note: Costs adjusted to 1999 dollars.

We can see from these tables that the cost effectiveness of our diesel engine/gasoline vehicle/diesel sulfur standards falls within the range of these other programs for both NO_X+NMHC and PM. Our program overlaps the range of the recently promulgated standards for Tier 2 light-duty vehicles and gasoline sulfur shown in Table V.E–3. Our program also overlaps the cost-effectiveness of past programs for PM. It is true that some previous programs have been more cost efficient than the program we are finalizing today. However, it should be expected that the next generation of standards will be more expensive than the last, since the least costly means for reducing emissions is generally pursued first.

In evaluating the cost effectiveness of our diesel engine/gasoline vehicle/diesel sulfur program, we also considered whether the new standards are cost effective in comparison with possible stationary source controls. In the context of the Agency's rulemaking which would have revised the ozone and PM NAAQS,[191] the Agency compiled a list of additional known technologies that could be considered in devising new emission reductions strategies.[192] Through this broad review, over 50 technologies were identified that could reduce NO_X, VOC, or PM. The cost effectiveness of these technologies averaged approximately $5,000/ton for VOC, $13,000/ton for NO_X, and $40,000/ton for PM. Although a $10,000/ton limit was actually used in the air quality analysis presented in the NAAQS revisions rule, these values clearly indicate that, not only are future emission control strategies likely to be more expensive (less cost effective) than past strategies, but the cost effectiveness of our program falls well below the average of those choices, and is near the lower end of the range of potential future strategies.

In summary, we believe that the weight of the evidence from alternative means of providing substantial NO_X + NMHC and PM emission reductions indicates that our diesel engine/gasoline vehicle/diesel sulfur program is cost effective relative to other means of achieving air quality improvements. We believe this is true from the perspective of other mobile source control programs and from the perspective of other stationary source technologies that might be considered.

F. Does the Value of the Benefits Outweigh the Cost of the Standards?

While EPA uses relative cost-effectiveness as the principal economic policy criterion for these standards, further insight regarding the merits of the standards can be provided by benefit-cost analysis. The purpose of this section is to summarize the methods we used and results we obtained in conducting an analysis of the economic benefits of the HD Engine/Diesel Fuel program, and to compare these economic benefits with the estimated costs of the rule. In summary, the results of our analysis indicate that the economic benefits of the HD Engine/Diesel Fuel standards will exceed the costs of meeting the standards. The annual estimated benefits we were able to quantify were $70.4 billion (1999$).

1. What Was Our Overall Approach to the Benefit-Cost Analysis?

The basic question we sought to answer in the benefit-cost analysis was, ''What are the net yearly economic benefits to society of the reduction in mobile source emissions likely to be

[191] This rulemaking was remanded to EPA by the D.C. Circuit Court on May 14, 1999. However, the analyses completed in support of that rulemaking are still relevant, since they were designed to investigate the cost effectiveness of a wide variety of potential future emission control strategies. An appeal is currently pending before the U.S. Supreme Court.

[192] Regulatory Impact Analyses for the Particulate Matter and Ozone National Ambient Air Quality Standards and Proposed Regional Haze Rule,'' Appendix B, ''Summary of control measures in the PM, regional haze, and ozone partial attainment analyses,'' Innovative Strategies and Economics Group, Office of Air Quality Planning and Standards, U.S. Environmental Protection Agency, Research Triangle Park, NC, July 17, 1997.

achieved by the final HD Engine/Diesel Fuel program?'' In designing an analysis to address this question, we selected a future year for analysis (2030) that is representative of full-implementation of the program (i.e., when the US heavy-duty truck fleet is composed of virtually only compliant heavy-duty vehicles). We also adopted an analytical structure and sequence similar to that used in the ''section 812 studies'' to estimate the total benefits and costs of the full Clean Air Act.[193] Moreover, we used many of the same models and assumptions used in the section 812 studies as well as other Regulatory Impact Analyses (RIAs) prepared by the Office of Air and Radiation. One difference from previous RIAs, however, is that for particulate matter air quality modeling we used the Regulatory Modeling System for Aerosols and Deposition (REMSAD) model. This model was used in the most recent section 812 study to model air quality in the West. By adopting the major design elements, models, and assumptions developed for the section 812 studies and other RIAs, we have largely relied on methods which have already received extensive review by the independent Science Advisory Board (SAB), by the public, and by other federal agencies.

2. What Are the Significant Limitations of the Benefit-Cost Analysis?

Every benefit-cost analysis examining the potential effects of a change in environmental protection requirements is limited to some extent by data gaps, limitations in model capabilities (such as geographic coverage), and uncertainties in the underlying scientific and economic studies used to configure the benefit and cost models. Deficiencies in the scientific literature often result in the inability to estimate changes in health and environmental effects, such as potential increases in premature mortality associated with increased exposure to carbon monoxide. Deficiencies in the economics literature often result in the inability to assign economic values even to those health and environmental outcomes which can be quantified. While these general uncertainties in the underlying scientific and economics literatures are discussed in detail in the RIA and its supporting documents and references, the key uncertainties which have a bearing on the results of the benefit-cost analysis of today's action are the following:

- The exclusion of potentially significant benefit categories (e.g., health and ecological benefits of reduction in hazardous air pollutants emissions);
- Errors in measurement and projection for variables such as population growth;
- Uncertainties in the estimation of future year emissions inventories and air quality;
- Uncertainties associated with the extrapolation of air quality monitoring data to some unmonitored areas required to better capture the effects of the standards on the affected population;
- Variability in the estimated relationships of health and welfare effects to changes in pollutant concentrations; and
- Uncertainties associated with the effect of potential future actions to limit emissions.

Despite these uncertainties, we believe the benefit-cost analysis provides a reasonable indication of the expected economic benefits of the HD Engine/Diesel Fuel program in 2030 under a set of assumptions. For the final HD Engine/Diesel Fuel benefit analysis, we adopt an approach similar to the Tier 2/Gasoline Sulfur RIA and the section 812 study. We first present an estimate for a primary set of benefit endpoints followed by a presentation of alternative calculations of key health and welfare endpoints to characterize uncertainty in this primary set.

One key area of uncertainty is the value of a statistical life (VSL) for risk reductions in mortality. The adoption of a value for the projected reduction in the risk of premature mortality is the subject of continuing discussion within the economic and public policy analysis community. There is general agreement that the value to an individual of a reduction in mortality risk tends to vary based on several factors, including the age of the individual, the type of risk, the level of control the individual has over the risk, the individual's attitude toward risk, and the health status of the individual. Age in particular may be an important difference between populations affected by air pollution mortality risks and populations affected by workplace risks. Premature mortality risks from air pollution tend to affect the very old more than the working age population. As such, any adjustments to VSL for age differences may have a large impact on total benefits. However, EPA prefers not to draw distinctions in the monetary value assigned to the lives saved even if they differ in age, health status, socioeconomic status, gender or other characteristic of the adult population.

In the recent Tier 2/Gasoline Sulfur benefits analysis, we employed a value of statistical life years (VSLY) approach developed for the Section 812 studies in exploring the impact of age on VSL. However, since these earlier analyses were completed, the SAB Environmental Economics Advisory Committee (EEAC) issued a new advisory report which identifies significant additional limitations in this method. Specifically, the SAB EEAC notes that ''inferring the value of a statistical life year, however, requires assumptions about the discount rate and about the time path of expected utility of consumption'' (EPA–SAB–EEAC–00–013). They also note that ''the theoretically appropriate method is to calculate [willingness to pay (WTP)] for individuals whose ages correspond to those of the affected population, and that it is preferable to base these calculations on empirical estimates of WTP by age.''

SAB advised that the EPA ''continue to use a wage-risk-based VSL as its primary estimate, including appropriate sensitivity analyses to reflect the uncertainty of these estimates,'' and that ''the only risk characteristic for which adjustments to the VSL can be made is the timing of the risk'' (EPA–SAB–EEAC–00–013). In developing our primary estimate of the benefits of premature mortality reductions, we have appropriately discounted over the lag period between exposure and premature mortality. However, an empirical basis that meets the SAB's standards of reliability for adjusting the current $6 million VSL for many of these factors does not yet exist. A discussion of these factors is contained in the RIA and supporting documents. EPA recognizes the need for additional research by the scientific community to develop additional empirical support for adjustments to VSL for the factors mentioned above.

In accordance with the SAB advice, we use the VSL in our primary estimate and present alternative calculations of adjustment for age and other factors. Specifically, several studies conducted by Jones-Lee, et al. (1985, 1989, 1993) found a significant effect of age on the value of mortality risk reductions expressed by citizens in the United Kingdom. The results are supported by a recent analysis which asked samples of Canadian residents their values for reductions in mortality risk (Krupnick *et al.*, 2000). As alternative calculations, we apply the ratios based on the Jones-

[193] The section 812 studies include: (1) US EPA, Report to Congress: The Benefits and Costs of the Clean Air Act, 1970 to 1990, October 1997 (also known as the ''Section 812 Retrospective Report''); and (2) the first in the ongoing series of prospective studies estimating the total costs and benefits of the Clean Air Act (see EPA report number: EPA–410–R–99–001, November 1999).

Lee, *et al.* (1989, 1993) studies to the estimated premature mortalities within the appropriate age groups to provide alternative age-adjusted estimates of the value of avoided premature mortalities.

In the same way, the presentation of the other alternative calculations for certain endpoints seeks to demonstrate how much the overall benefit estimate might vary based on the value EPA has given to a parameter (which has uncertainty associated with it) underlying the estimates for human health and environmental effect incidence and the economic valuation of those effects. These alternative calculations represent conditions that might occur; however, EPA has selected the best values supported by current scientific literature for use in the primary estimate. The alternate calculations include the following:

- Estimating PM-related premature mortality benefits based on different concentration-response (C–R) function estimates;
- Value of avoided premature mortality incidences based on VSLY;
- Consideration of reversals in chronic bronchitis treated as lowest severity cases;
- Estimate of ozone-related chronic asthma;[194]
- Value of visibility changes in all Federal Class I areas;
- Value of visibility changes in US residential areas;
- Value of reduced household soiling damage;
- Alternative sensitivities of crops to ozone exposure from National Crop Loss Assessment Network estimates; and
- Avoided costs of reducing nitrogen loadings in three case study eastern estuaries and nine other eastern estuaries.

Unfortunately, it is not possible to combine all of the assumptions used in the alternate calculations to arrive at different total benefit estimates because, it is highly unlikely that the selected combination of alternative values would all occur simultaneously. Therefore, it is better to consider each alternative calculation individually to assess the sensitivity of total benefits to individual assumptions. For instance, estimating PM-related premature mortality benefits based on different concentration-response functions may be an important uncertainty. Specifically, the Harvard Six Cities study by Dockery *et al.* (1993) of the relationship between PM concentration and premature mortality is a plausible alternative to the American Cancer Society (ACS)/Krewski *et al.* (2000) study used for the primary estimate of benefits. The SAB has noted that ''the study had better monitoring with less measurement error than did most other studies'' (EPA–SAB–COUNCIL–ADV–99–012, 1999). However, the Dockery *et al.* study had a more limited geographic scope (and a smaller study population) than the ACS/Krewski *et al.* study and the ACS/Krewski *et al.* study appears more likely to mitigate a key source of potential confounding. The Dockery *et al.* study did cover a broader age category (25 and older compared to 30 and older in the ACS study) and followed the cohort for a longer period (15 years compared to 8 years in the ACS study). For these reasons, the Dockery *et al.* study is considered to be a plausible alternative estimate of the avoided premature mortality incidences associated with this final rule. The alternative estimate for mortality can be substituted for the valuation component in our primary estimate of mortality benefits to observe how the net benefits of the program may be influenced by this assumption.

In addition to the estimate for the primary set of endpoints and alternative calculations of benefits, our RIA also presents an appendix with supplemental benefit estimates and sensitivity analyses of other key parameters in the benefits analysis that have greater uncertainty surrounding them due to limitations in the scientific literature. The following sensitivity analyses include alternative income elasticities of willingness to pay;[195] alternative discount rates;[196] alternative PM exposure lags preceding mortality; threshold analysis for PM mortality;[197] and other analyses.

Even with our efforts to fully disclose the uncertainty in our estimate, this uncertainty presentation method does not provide a definitive or complete picture of the true range of monetized benefits estimates. The set of alternative calculations is only representative of those benefits that we were able to quantify and monetize.

3. How Has the Benefit-Cost Analysis Changed From Proposal?

No quantitative benefits analysis was conducted for the proposal, although we outlined the methodology to be used for the final rule analysis. We summarized and responded to public comment regarding the methods in the Summary and Analysis of Comment document. Moreover, we have improved the methods that were presented at proposal. For the benefits assessment for the final rule, EPA updated the C–R functions for health endpoints (*e.g.,* Krewski *et al.,* 2000), updated the emissions inventory, and presented air quality information regarding urban and residential visibility. For the air quality inputs to the benefits analysis, we used the REMSAD model which offers improved chemistry, resolution, and other capabilities over the Source-Receptor Matrix discussed in the proposal. The model's performance, including uncertainties, are discussed elsewhere in the RIA and technical support documents. In addition, we also updated our presentations of monetary benefits of the reduced premature mortality based on advice from the SAB.[198] All of the changes made since the proposal serve to improve the analysis.

4. What Are the Benefits in the Years Leading up to 2030?

The HD Engine/Diesel Fuel program has various cost and emission related components, as described earlier in this section. These components would begin at various times and in some cases would phase in over time. This means that during the early years of the program there would not be a consistent match between cost and benefits. This is especially true for the vehicle control portions of the program, where the full vehicle cost would be incurred at the time of vehicle purchase, while the fuel cost along with the emission reductions and benefits resulting from all these costs would occur throughout the lifetime of the vehicle. Because of this

[194] McDonnell, W.F., D.E. Abbey, N.Nishino, M.D. Lebowitz. Long-term Ambient Ozone Concentration and the Incidence of Asthma in Nonsmoking Adults: The Ahsmog Study. Environmental Research. A:80, 110–121. 1999.

[195] Income elasticity of WTP characterizes the relationship between changes in real income and changes in the WTP for a particular commodity. Income elasticity of WTP is measured as the percentage change in WTP for a one percent change in real income. For example, an income elasticity of 0.5 implies that a 10 percent increase in real income would lead to a 5 percent increase in WTP.

[196] The choice of a discount rate, and its associated conceptual basis, is a topic of ongoing discussion within the federal government. EPA adopted a 3 percent discount rate for its primary analysis in this case to reflect reliance on a ''social rate of time preference'' discounting concept. We have also calculated benefits and costs using a 7 percent rate consistent with an ''opportunity cost of capital'' concept to reflect the time value of resources directed to meet regulatory requirements. In this case, the benefit and cost estimates were not significantly affected by the choice of discount rate. Further discussion of this topic appears in EPA's Guidelines for Preparing Economic Analyses (in press).

[197] The SAB has advised EPA that there is no current scientific basis for selecting a threshold for PM-related health effects considered in this analysis (EPA–SAB–Council–ADV–99–012, 1999).

[198] Full documentation of the SAB advice can be found at their website *(www.epa.gov/sab)* or in the docket under the following reference: EPA–SAB–EEAC–00–013, July 27, 2000. An SAB Report on EPA's White Paper Valuing the Benefits of Fatal Cancer Risk Reduction.

inconsistency and our desire to more appropriately match the costs and emission reductions of our program, our analysis uses a future year when the fleet is nearly fully turned over (2030).

In the years before 2030, the benefits from the HD Engine/Diesel Fuel program will be less than those estimated here, because the compliant heavy-duty fleet will not be fully phased in. Annualized costs, on the other hand, reach nearly their full value within a few years of program initiation (once all phase-ins are completed). This can be seen by comparing the anticipated emission reductions described earlier in section II.D with the aggregate costs of section V.E. Thus, a benefit-cost ratio computed for the earlier years of the program would be expected to be lower than a ratio based on our 2030 analysis. On the other hand, since the estimated benefits are more than ten times the costs in 2030, the emission reduction and cost trends suggest that it is likely that annual benefits would exceed costs from a time early in the life of the program.[199]

Furthermore, to the extent that a lower ratio of benefits to costs early in the program is the result of the mismatch of costs and benefits in time, a simple analysis of an individual year would be misleading. A more appropriate means of capturing the impacts of timing differences in benefits and costs would be to produce a net present value comparison of the costs and benefits over some period of years (an approach analogous to the aggregate cost effectiveness presented in section V.F). Unfortunately, while this is relatively straight-forward for the costs, it is currently not feasible to do a multi-year analysis of the benefits as this would require a significant amount of air quality modeling to capture each year.

5. What Were the Results of the Benefit-Cost Analysis?

The benefit-cost analysis for the HD Engine/Diesel Fuel program reflects a single year ''snapshot'' of the yearly benefits and costs expected to be realized once the standards have been fully implemented and non-compliant vehicles have all been retired. As discussed in section V.F–4, the benefit-cost ratio would be expected to be lower than the results calculated here in the early years of the program.

Table V.F–1 presents EPA's primary estimate of the benefits of the rule, both the estimated reductions in incidences and the estimated economic value of those incidence reductions. In interpreting the results, it is important to keep in mind the limited set of effects we are able to monetize. Specifically, the table lists the avoided incidences of individual health and environmental effects, the pollutant associated with each of these endpoints, and the estimated economic value of those avoided incidences. For several environmental effects such as visibility, the concept of incidences or cases does not apply as it does for health effects; thus, for these categories economic values are applied directly to air quality conditions. As the table indicates, we estimate that the HD Engine/Diesel Fuel program will produce about 5,500 fewer cases of chronic bronchitis, and we also see significant improvements in minor restricted activity days (with an estimated 9,838,500 fewer cases). Our estimate also incorporates significant reductions in impacts on children's health, showing reductions of 17,600 cases of acute bronchitis, 192,900 fewer cases of lower respiratory symptoms, and 193,400 fewer cases of upper respiratory symptoms in asthmatic children each year. In addition, today's rule is estimated to reduce 361,400 incidents of asthma attacks each year in asthmatics of all ages from reduced exposure to ozone and particles. Asthma is the most prevalent chronic disease among children and currently affects over seven percent of children under 18 years of age.

Total monetized benefits, however, are driven primarily by the estimated 8,300 fewer premature fatalities each year, which account for almost 89 percent of total benefits. We assume for this analysis that some of the incidences of premature mortality related to PM exposures occur in a distributed fashion over the five years following exposure. To take this into account in the valuation of reductions in premature mortality, we apply an annual three percent discount rate to the value of premature mortality occurring in years after our analysis year.

TABLE V.F–1.—EPA PRIMARY ESTIMATE OF THE ANNUAL QUANTIFIED AND MONETIZED BENEFITS ASSOCIATED WITH IMPROVED AIR QUALITY RESULTING FROM THE HD ENGINE/DIESEL FUEL RULE IN 2030 [A]

Endpoint	Pollutant	Avoided incidence [A C] (cases/year)	Monetary benefits [A D] (millions 1999$)
Premature mortality [B] (adults, ages 30 and over)	PM [B]	8,300	$62,580
Chronic bronchitis	PM	5,500	$2,430
Hospital Admissions from Respiratory Causes	Ozone and PM	4,100	$60
Hospital Admissions from Cardiovascular Causes	Ozone and PM	3,000	$50
Emergency Room Visits for Asthma	Ozone and PM	2,400	<$5
Acute bronchitis (children, ages 8–12)	PM	17,600	<$5
Upper respiratory symptoms (asthmatic children, ages 9–11)	PM	193,400	$10
Lower respiratory symptoms (children, ages 7–14)	PM	192,900	<$5
Asthma attacks (asthmatics, all ages) [E]	Ozone and PM	361,400	B_a
Work loss days (adults, ages 18–65)	PM	1,539,400	$160
Minor restricted activity days (adults, ages 18–65) (adjusted to exclude asthma attacks).	Ozone and PM	9,838,500	$530
Other health effects [E]	Ozone, PM, CO, NMHC	$U_1+U_2+U_3+U_4$	$B_1+B_2+B_3+B_4$
Decreased worker productivity	Ozone		$140
Recreational visibility (86 Class I Areas)	PM		$3,260
Residential visibility	PM		B_5
Household soiling damage	PM		B_6
Materials damage	PM		B_7
Nitrogen Deposition to Estuaries	Nitrogen		B_8
Premature mortality [B] (adults, ages 30 and over)	PM [B]	8,300	$62,580

[199] While emission reduction trends give a general indication of the likely trends in the benefits, there are sufficient non-linearities and interactions among pollutants in the atmospheric chemistry used in our modeling that it is not possible to attempt a quantitative estimate of the benefits simply from changes in the inventories in years that were not fully modeled.

TABLE V.F–1.—EPA PRIMARY ESTIMATE OF THE ANNUAL QUANTIFIED AND MONETIZED BENEFITS ASSOCIATED WITH IMPROVED AIR QUALITY RESULTING FROM THE HD ENGINE/DIESEL FUEL RULE IN 2030 [A]—Continued

Endpoint	Pollutant	Avoided incidence [A+C] (cases/year)	Monetary benefits [A+D] (millions 1999$)
Chronic bronchitis	PM	5,500	$2,430
Hospital Admissions from Respiratory Causes	Ozone and PM	4,100	$60
Hospital Admissions from Cardiovascular Causes	Ozone and PM	3,000	$50
Emergency Room Visits for Asthma	Ozone and PM	2,400	<$5
Acute bronchitis (children, ages 8–12)	PM	17,600	<$5
Upper respiratory symptoms (asthmatic children, ages 9–11)	PM	193,400	$10
Lower respiratory symptoms (children, ages 7–14)	PM	192,900	<$5
Asthma attacks (asthmatics, all ages) [E]	Ozone and PM	361,400	B_a
Work loss days (adults, ages 18–65)	PM	1,539,400	$160
Minor restricted activity days (adults, ages 18–65)	Ozone and PM	9,838,500	$530
(adjusted to exclude asthma attacks)			
Other health effects [E]	Ozone and PM	$U_1+U_2+U_3+U_4$	$B_1+B_2+B_3+B_4$
	CO, NMHC		
Decreased worker productivity	Ozone		$140
Agricultural crop damage (6 crops)	Ozone		$1,120
Commercial forest damage, (6 species in Eastern US)	Ozone		B_9
Commercial forest damage, other	Ozone		B_{10}
Other welfare effects [E]	Ozone, PM		$B_{11}+B_{12}+B_{13}+B_{14}$
	CO, NMHC		
Monetized Total [F]			$70,360+B

Notes:
[A] Ozone-related benefits are only calculated for the Eastern US due to unavailability of reliable modeled ozone concentrations in the Western US, thus underestimating national ozone-related benefits. See RIA and technical support documents for details.
[B] Premature mortality associated with ozone is not separately included in this analysis. It is assumed that the ACS/Krewski, *et al.* (2000) C–R function for premature mortality captures both PM mortality benefits and any mortality benefits associated with other air pollutants. Also note that the valuation assumes the 5 year distributed lag structure described earlier and a 3 percent discount rate over that lag period.
[C] Incidences are rounded to the nearest 100.
[D] Dollar values are rounded to the nearest 10 million. Monetary benefits account for growth in real GDP per capita between 1990 and 2030.
[E] The Ui are the incidences and the Bi are the values for the unquantified category i. For some categories such as asthma attacks, we were able to quantify the reduction in incidence, but we present the monetization as an alternative calculation. A detailed listing of unquantified PM, ozone, CO, and NMHC related health and welfare effects is provided in Table V.F–2. NMHC shown here are also hazardous air pollutants listed in the Clean Air Act.
[F] B is equal to the sum of all unmonetized categories, *i.e.* Ba+B1+B2+...+Bn.

This table also indicates with a ''B'' those additional health and environmental benefits which could not be expressed in quantitative incidence and/or economic value terms. A full listing of the benefit categories that could not be quantified or monetized in our estimate are provided in Table V.F–2. For instance, visibility is expected to improve in all areas of the country, with the largest improvements occurring in heavily populated residential areas (*e.g.,* half of the urban areas show an improvement of 0.5 deciviews or more). However, due to limitations on sources to value these effects, we include a ''B'' in the primary estimate table for this category. Likewise, the HD Engine/Diesel Fuel rule will also provide progress for some estuaries to meet their goals for reducing nitrogen deposition (*e.g.,* nitrogen loadings for the Albemarle/Pamlico Sound are reduced by 24 percent of their reductions goal), however, this endpoint is also displayed with a ''B'' in the table. A full appreciation of the overall economic consequences of the HD Engine/Diesel Fuel standards requires consideration of all benefits and costs expected to result from the new standards, not just those benefits and costs which could be expressed here in dollar terms.

In summary, EPA's primary estimate of the benefits of the HD Engine/Diesel Fuel rule is $70.4 billion in 2030. This estimate accounts for growth in real gross domestic product (GDP) per capita between 1990 and 2030.

TABLE V.F–2.—ADDITIONAL, NON-MONETIZED BENEFITS OF THE HD ENGINE/DIESEL FUEL STANDARDS

Pollutant	Unquantified effects
Ozone Health	Premature mortality; [A] Increased airway responsiveness to stimuli; Inflammation in the lung; Chronic respiratory damage; Premature aging of the lungs; Acute inflammation and respiratory cell damage; Increased susceptibility to respiratory infection; and Non-asthma respiratory emergency room visits.
Ozone Welfare	Decreased yields for commercial forests; Decreased yields for fruits and vegetables; Decreased yields for non-commercial crops; Damage to urban ornamental plants; Impacts on recreational demand from damaged forest aesthetics; and Damage to ecosystem functions.
PM Health	Infant mortality; Low birth weight; Changes in pulmonary function; Chronic respiratory diseases other than chronic bronchitis; and Morphological changes.
PM Welfare	Visibility in non-class I areas; Soiling and materials damage; and Damage to ecosystem functions.
Nitrogen and Sulfate Deposition Welfare.	Impacts of acidic sulfate and nitrate deposition on commercial forests; Impacts of acidic deposition to commercial freshwater fishing; Impacts of acidic deposition to recreation in terrestrial ecosystems; Reduced existence values for currently healthy ecosystems; Impacts of nitrogen deposition on commercial fishing, agriculture, and forests; Impacts of nitrogen deposition on recreation in estuarine ecosystems; and Damage to ecosystem functions.

TABLE V.F–2.—ADDITIONAL, NON-MONETIZED BENEFITS OF THE HD ENGINE/DIESEL FUEL STANDARDS—Continued

Pollutant	Unquantified effects
CO Health	Premature mortality;[A] Behavioral effects; Hospital admissions—respiratory, cardiovascular, and other; Other cardiovascular effects; Developmental effects; Decreased time to onset of angina; and Non-asthma respiratory ER visits.
NMHC Health	Cancer (benzene, 1,3-butadiene, formaldehyde, acetaldehyde);[B] Anemia (benzene); Disruption of production of blood components (benzene); Reduction in the number of blood platelets (benzene); Excessive bone marrow formation (benzene); Depression of lymphocyte counts (benzene); Reproductive and developmental effects (1,3-butadiene); Irritation of eyes and mucus membranes (formaldehyde); Respiratory irritation (formaldehyde); Asthma attacks in asthmatics (formaldehyde); Asthma-like symptoms in non-asthmatics (formaldehyde); Irritation of the eyes, skin, and respiratory tract (acetaldehyde); and Upper respiratory tract irritation and congestion (acrolein).
NMHC Welfare	Direct toxic effects to animals; Bioaccumlation in the food chain; and Damage to ecosystem function.

[A] Premature mortality associated with ozone and carbon monoxide is not separately included in this analysis. In this analysis, we assume that the ACS/Krewski, *et al.* C–R function for premature mortality captures both PM mortality benefits and any mortality benefits associated with other air pollutants.
[B] Non-methane hydrocarbons related to this rule are also hazardous air pollutants listed in the Clean Air Act.

In addition, in analyzing the present rule, we recognized that the benefits estimates were subject to a number of uncertainties with other parameters. In Table V.F–3 we present key alternatives to assumptions regarding individual elements of the benefits analysis and their effect on the primary estimate of benefits. This table also displays some assumptions that can be made to value some of the categories that are indicated with a ''B'' in the primary estimate. For example, this table can be used to answer questions like, ''What would total benefits be if we were to use the ACS/Krewski, *et al.* regionally adjusted $PM_{2.5}$ C–R function to estimate avoided premature mortality?'' This table is not meant to be comprehensive but to identify the impact of key issues identified by EPA or in public comment as affecting the total benefits estimation.

TABLE V.F—3. KEY ALTERNATIVE BENEFITS CALCULATIONS FOR THE HD ENGINE/DIESEL FUEL RULE IN 2030[A]

Description of alternative		Avoided incidences	Impact on primary benefits estimate adjusted for growth in real income (million 1999$)
Alternative Concentration-Response Functions for PM-related Premature Mortality			
1. Krewski/ACS Study Regional Adjustment Model[B]		9,400	+$7,370 (+10.5%)
2. Pope/ACS Study[C]		9,900	+12,780 (+18.2%)
3. Krewski/Harvard Six-city Study[D]		24,200	+$118,500 (+168.4%)
Alternative Methods for Valuing Reductions in Incidences of PM-related Premature Mortality			
Value of avoided premature mortality incidences based on age-specific VSL	Jones-Lee (1989)[E]	8,300	−$28,510 (−40.5%)
	Jones-Lee (1993)[F]	8,300	−$6,820 (−10.0%)

[A] Section VII–.F of the RIA provides complete information about the estimates in this table.
[B] This C–R function is included as a reasonable specification to explore the impact of adjustments for broad regional correlations, which have been identified as important factors in correctly specifying the PM mortality C–R function.
[C] The Pope et al. C–R function was used to estimate reductions in premature mortality for the Tier 2/Gasoline Sulfur benefits analysis. It is included here to provide a comparable estimate for the HD Engine/Diesel Fuel rule.
[D] The Krewski et al. ''Harvard Six-cities Study'' estimate is included because the Harvard Six-cities Study featured improved exposure estimates, a slightly broader study population (adults aged 25 and older), and a follow-up period nearly twice as long as that of Pope, et al. and as such provides a reasonable alternative to the primary estimate.
[E] Jones-Lee (1989) provides an estimate of age-adjusted VSL based on a finding that older people place a much lower value on mortality risk reductions than middle-age or younger people.
[F] Jones-Lee (1993) provides an estimate of age-adjusted VSL based on a finding that older people value mortality risk reductions only somewhat less than middle-aged or younger people.

The estimated annualized 2030 cost for businesses to implement the final HD Engine/Diesel Fuel program from Table V.D–1 of the RIA is $4.3 billion (1999$). When considered in a broader social cost context of the cost to society of the resources used, which is the right metric for cost-benefit analysis, the annualized cost is $4.2 billion. The monetized benefits are approximately $70.4 billion and EPA believes there is considerable value to the public of the benefits it could not monetize. The net benefit that can be monetized is $66.2 billion. Therefore, implementation of the HD Engine/Diesel Fuel program is expected to provide society with a net gain in social welfare based on economic efficiency criteria. Tables V.F–4 summarizes the costs, benefits, and net benefits.

TABLE V.F–4.—2030 ANNUAL MONETIZED COSTS, BENEFITS, AND NET BENEFITS FOR THE FINAL HD ENGINE/DIESEL FUEL RULE [a]

	Billions of 1999$
Annual compliance costs	$4.2
Monetized PM-related benefits [b]	$69.0 + B_{PM}
Monetized Ozone-related benefits [b, c]	$1.4 + B_{Ozone}
NMHC-related benefits	not monetized (B_{NMHC})
CO-related benefits	not monetized (B_{CO})
Total annual benefits	$70.4 + B_{PM} + B_{Ozone} + B_{NMHC} + B_{CO}
Monetized net benefits [d]	$66.2 + B

[a] For this section, all costs and benefits are rounded to the nearest 100 million. Thus, figures presented in this chapter may not exactly equal benefit and cost numbers presented in earlier sections of the chapter.
[b] Not all possible benefits or disbenefits are quantified and monetized in this analysis. Potential benefit categories that have not been quantified and monetized are listed in Table VII–1. Unmonetized PM- and ozone-related benefits are indicated by B_{PM} and B_{Ozone}, respectively.
[c] Ozone-related benefits are only calculated for the Eastern U.S. due to unavailability of reliable modeled ozone concentrations in the Western U.S. This results in an underestimate of national ozone-related benefits. See US EPA (2000a) for a detailed discussion of the UAM–V ozone model and model performance issues.
[d] B is equal to the sum of all unmonetized benefits, including those associated with PM, ozone, CO, and NMHC.

VI. Requirements for Engine and Vehicle Manufacturers

A. Compliance with Standards and Enforcement

We are making some changes to the compliance-related requirements that will apply to vehicles and engines certified to the new standards. These changes are described below. Changes related to the supplemental emission requirements are discussed in Section III.C, along with the discussion of revised standards for those requirements. In general, however, existing compliance provisions will continue to apply to the vehicles and engines subject to today's standards.

1. Allowable Maintenance

Our existing regulations contain provisions (40 CFR § 86.004–25) that would affect scheduled maintenance of NO_X adsorbers, PM traps, and other devices that may be used to comply with the new standards. These provisions limit the amount of maintenance to emission-related components that the manufacturer is allowed to conduct during durability testing (or specify in the maintenance instructions that it gives to operators). We believe that the continuation of these requirements is appropriate because we expect that, with very low fuel sulfur levels, these technologies will be very durable in use and will last the full useful life with little or no scheduled maintenance other than cleaning. However, we are modifying these provisions slightly. The existing regulations would have allowed a manufacturer to specify something as drastic as replacement of the adsorber catalyst bed or the trap filter after as little as 100,000–150,000 miles if there was a ''reasonable likelihood'' that the maintenance would get done. To ensure that no manufacturer underdesigns their adsorbers or traps (compared to the level of durability that is achievable), we are requiring that these technologies be designed to last for the full useful life of the engine. More specifically, the final regulations state that scheduled replacement of the PM filter element, NO_X adsorber, or other catalyst module bed is not allowed during the useful life, unless the manufacturer can show that the replacement will in fact occur and pays for the replacement. Otherwise, only cleaning and adjustment will be allowed as scheduled maintenance. It is important to note that this restriction only applies to the manufacturer's specified maintenance. Owners and operators are, of course, allowed to perform additional maintenance.

2. Emission Data Waivers

Today's action includes PM standards for all heavy-duty engines. However, because gasoline engines have inherently low PM emissions, it will be appropriate in some cases to waive the requirement to measure PM emissions for certification. Therefore, the final regulations give us the flexibility to allow manufacturers to certify gasoline engines and vehicles without measuring PM emissions, provided they can demonstrate compliance in some other way such as with previous data, analyses, or other information. The flexibility is the same as that allowed for PM emissions from light-duty gasoline vehicles and for CO emissions from heavy-duty diesel engines. We are also allowing the same type of analysis to be used with respect to formaldehyde emissions from all petroleum-fueled heavy-duty vehicles.

3. Crankcase Emissions

Section III describes a new requirement for manufacturers to control crankcase emissions from turbocharged diesel engines. Historically, control of crankcase emissions has meant sealing the crankcase and routing the crankcase gases into the air intake system so they can be combusted. However, some manufacturers have expressed a reasonable concern that this would be unnecessarily restrictive, and suggested that we should allow for alternative controls. Therefore, we are making some revisions from the proposed regulations. First, we are clarifying that this closed crankcase provision does not require that crankcase gases be routed into the engine intake. We will also allow manufacturers to route crankcase gases into the exhaust system, including upstream of the exhaust emission controls. Furthermore, we are also changing the regulations to allow manufacturers to instead measure crankcase emissions and add them to the measured exhaust emissions (or to measure them together). Manufacturers choosing to use this allowance rather than to seal the crankcase will need to modify their exhaust deterioration factors or to develop separate deterioration factors to account for increases in crankcase emissions as the engine ages. Manufacturers would also be responsible for ensuring that crankcase emissions would be readily measurable in use.

4. Non-Conformance Penalties

We are not establishing non-conformance penalties (NCPs) for the new standards at this time. NCPs are monetary penalties that manufacturers can pay instead of complying with an emission standard. In order for us to establish NCPs for a specific standard, we would have to find that: (1) Substantial work will be required to meet the standard for which the NCP is offered; and (2) there is likely to be a ''technological laggard'' (*i.e.,* a manufacturer that cannot meet the standard because of technological (not economic) difficulties and, without NCPs, might be forced from the marketplace). According to the CAA (Section 206(g)), such NCPs ''shall remove any competitive disadvantage to manufacturers whose engines or vehicles achieve the required degree of emission reduction.'' We also must determine compliance costs so that appropriate penalties can be established. While we have established NCPs in past rulemakings, their use has been rare since the implementation of our averaging, banking and trading program.

We requested comment on the need for NCPs in this rulemaking. However, after reviewing the comments, we cannot conclude that NCPs will be needed. While we believe that substantial work will be required to meet the 2007 standards, we currently have no information indicating that a technological laggard is likely to exist. Recognizing that it may have been difficult for manufacturers to comment on these criteria at this early stage of development, when implementation of these standards is still more than six years away, it may be appropriate to reconsider NCPs in a future action.

5. Idle CO Standards

We are also eliminating the idle CO emission standards for heavy-duty vehicles and engines below 14,000 pounds beginning in the 2004 model year, provided they are certified to the OBD requirements of our Phase 1 rule. (See 65 FR 59896, October 6, 2000.) The certified OBD systems on those vehicles will likely serve as the basis for future inspection and maintenance tests in areas testing vehicles in that weight class. Certification data show that heavy-duty engines and vehicles are certifying with idle CO levels well below the standard. We believe that the existing standard is not the forcing function for these low idle CO levels, but instead it is the electronic computer-controlled engines of today. In effect, we believe that the idle CO standard places an unnecessary testing burden on manufacturers whose vehicles are certified to the OBD requirements. We also eliminated the idle CO standard for light-duty trucks in our Tier 2 rule. (See 65 FR 6698, February 10, 2000.) Note that we are considering a future rule that would implement OBD on engines over 14,000 pounds. We would consider eliminating the idle CO requirement for those engines in the event that OBD requirements are put into place.

B. Compliance With Phase-in Schedules

In Section III we described the phase-in options for diesel engine manufacturers. These options are based on percentages of a manufacturer's production. We recognize, however, that manufacturers need to plan for compliance well in advance of the start of production, and that actual production volumes for any one model year may differ from their projections. This is a bigger concern for the diesel engines than for gasoline engines because of the three-year phase-in of the new diesel NO_X standards. On the other hand, we believe that it would be inappropriate to base compliance solely on a manufacturer's projections. That could encourage manufacturers to overestimate their production of the low-emission engines, and could result in significantly lower emission benefits during the phase-in. Given these conflicting factors, we are finalizing a compromise approach. We will initially only require diesel manufacturers to project compliance with the phase-in based on their projected production volumes, provided that they made up any deficits (in terms of percent of production) the following year. Thus, a manufacturer that projected 50 percent of its production in 2007 would be low-NO_X (*i.e.,* meet the 0.20 g/bhp-hr NO_X standard), but that was only able to actually produce 45 percent of its production as low-NO_X, could achieve compliance by producing at least 55 percent of its production as low-NO_X in 2008. However,since production volumes differ from year to year, deficits would be calculated and made up based on numbers of engines or vehicles, rather than percent of production. This is similar to the approach that we used in phasing-in the Tier 2 emission standards.

Since we expect that a manufacturer making a good-faith projection of sales would not be very far off of the actual production volumes, we are limiting the size of the deficit that could be excused. In all cases, the manufacturer will be required to produce at least 25 percent of its production as low-NO_X engines in model years 2007, 2008, and 2009. Another important restriction is that manufacturers will not be allowed to have a deficit in the third year of the phase-in (2009). This restriction is being finalized to ensure that manufacturers are able to make up the deficit. Since they could not produce more than 100 percent low-NO_X engines in 2010, it would not be possible to make up a deficit from 2009.

C. Averaging, Banking, and Trading

We are continuing the basic structure of the existing ABT program for heavy-duty engines. This program allows manufacturers to certify their engine families at various specified emissions levels above or below the standard, as long as they comply with the applicable standards when averaged across their various engine families. More specifically, manufacturers are allowed to certify their engine families with various family emission limits (FELs), provided that in each model year the average of the FELs does not exceed the standard when weighted by the numbers of engines produced in each family for that model year. To do this, they generate certification emission credits by producing engine families that are certified below the applicable standard. These credits can then be used to offset the production of engine families that are certified to have emissions in excess of the applicable standards. Manufacturers are also allowed to bank these credits for later use or trade them to other manufacturers. We are adopting some restrictions to ensure that the environmental benefits of the program are not jeopardized as described in the Response to Comments document. These restrictions are described below along with other changes made in response to comments. We are continuing this ABT program because we believe that it will provide the manufacturers significant compliance flexibility. This compliance flexibility could be a significant factor in the manufacturers' ability to comply with the standards in 2007 and will help to allow implementation of the new, more stringent standards as soon as permissible under the CAA.

We proposed two separate averaging sets during the diesel phase-in period. In one set, engines would be certified to the 2.4 g/bhp-hr NO_X+NMHC standard (which applies for model years 2004–2006), and would be subject to the restrictions and allowances established for those model years. In the other set, engines would be certified to the 0.20 g/bhp-hr NO_X standard, and would be subject to the restrictions and allowances in the proposed program.

While we proposed to not allow averaging between these two sets, based on the comments we received, the final regulations allow manufacturers to transfer credits across these averaging sets, with some restrictions. Manufacturers could use credits generated during the phase-out of engines subject to the 2.4 g/bhp-hr NO_X+NMHC standard to comply with the 0.20 g/bhp-hr NO_X standard, but these credits will be subject to a 20 percent discount. (Each gram of NO_X+NMHC credits from the phase-out engines would be worth 0.8 grams of NO_X credits in the new ABT program.) This discount reflects the fact that the change from our proposed ABT program provides manufacturers with substantial flexibility in meeting the final standards and also accounts for the NMHC component of the credit. In the first year of the phase-in, this flexibility will allow manufacturers to reduce fleetwide emissions more than would have been possible with the proposed program. Manufacturers will be able to reduce emissions for a substantial percentage of their production, reflecting the use of low-NO_X technologies, without being required to produce a full 50 percent of their production with NO_X emissions near or below 0.20 g/bhp-hr in the initial year of the phase-in. This generation and use of credits will give manufacturers a greater opportunity to gain experience with the low-NO_X technologies before they are required to meet the final standards across their full production. As part of the averaging program during the phase-in period (model years 2007–2009), we will allow diesel engine credits to be averaged across service class using a modified form of the ABT program. These credit exchanges would occur in the same manner as other credit exchanges, except that the credits generated from one service class would need to be calculated using the useful life and horsepower values of the engine family using credits. This would make the credit exchanges equivalent to the vehicle count phase-in provisions. This allowance is restricted to averaging. Banked or traded credits cannot be used across service class.

We are also adopting a restriction on the use of banked NO_X+NMHC credits generated from diesel engines certified to the 2.4 g/bhp-hr NO_X+NMHC standard. While we proposed to prohibit any such use, the final regulations will allow manufacturers to use banked credits to show compliance with the 0.20 g/bhp-hr standard, but the credits will be discounted by 20 percent when they are used for this purpose.[200] This is consistent with the cross-averaging set discount described above. In addition, we are setting an upper bound on the number of engines for which a manufacturer could use such banked credits during any one model year. The upper limit is ten percent of the manufacturer's annual U.S.-directed production of heavy-duty highway diesel engines, and would apply only for engines certified to FELs higher than 0.50 g/bhp-hr. We believe that this limit is necessary to prevent manufacturers from delaying the introduction of the low-NO_X technologies by using a large number of banked credits. This kind of delay would be contrary to the goals of the phase-in, which in large part is intended for manufacturers to gain some initial experience with the low-NO_X technologies for a limited portion of their production. Although it does not appear likely (based on manufacturer expectations) that such credits will exist in large numbers, this limit appears prudent to ensure that such a problem does not occur.

We are making similar changes to the ABT programs for heavy-duty gasoline engines and vehicles. We will allow exchange of credits from the chassis-certified vehicles to engines (and vice versa) on a credit for credit face-value basis, subject to a 20 percent discount.[201] The discount is necessary to account for the uncertainty in converting between g/mi standards and g/bhp-hr standards. We will also allow NO_X+NMHC credits from gasoline engines certified to the combined standards (including banked credits) to be used in the new NO_X-only ABT program, also subject to the 20 percent discount, for reasons discussed above and in the Response to Comments document. This discount would not apply for banked or averaged gasoline vehicle credits used within the vehicle ABT program, since the existing program is already a NO_X-only program. In connection to this option, we believe that it would be appropriate to allow gasoline engine manufacturers to voluntarily participate in an NMHC ABT program, instead of forcing them to convert their NO_X+NMHC credits into NO_X credits when the new standards take effect. While we believe that manufacturers will generally prefer to use these credits as NO_X credits, NMHC credits may be of some value to manufacturers since gasoline engine emission controls often have a NO_X-NMHC emission tradeoff much like the NO_X-PM tradeoff for diesel engines. Therefore, we are extending the ABT programs for gasoline engines and vehicles to include NMHC, beginning with the 2007 model year. These NO_X and NMHC ABT programs parallel the NO_X and PM ABT programs for diesels. In the NMHC ABT programs, the NMHC credits would be subject to the same allowances, restrictions, and discounts as the NO_X credits. In addition, we are adopting a provision to allow vehicle manufacturers to bank NMHC credits before 2008 for complete vehicles that are certified to the 2008 standards early. (Engine manufacturers are already allowed to bank NO_X+NMHC credits for model year 2004 and later engines.)

It is worth noting three other aspects of this new banking program. First we recognize that NO_X+NMHC credits are not the same as NO_X-only credits. However, both NMHC reductions and NO_X reductions have environmental value, although they are not necessarily equivalent. Thus, given the 20 percent discount that would be applied to the NO_X+NMHC credits if they are transferred into the new NO_X ABT program, we believe that it is appropriate to allow those credits to be used in the new NO_X program. This is especially true for diesels, which are expected to have low NMHC levels for model years 2004–2006 (probably about one-tenth of the expected NO_X levels). Second, the final program does not include the proposed provisions for banking undiscounted credits by meeting all of the new diesel standards early, because we believe that the early compliance option described in Section III would accomplish essentially the same flexibility. Finally, we are not finalizing any new discounts or restrictions for banked PM credits. Considering the simple 100 percent phase-in of the PM standards in 2007, we believe that such restrictions are not necessary to achieve the goals of this program for PM, especially given the 0.02 g/bhp-hr PM FEL cap, which is described below.

The existing ABT program includes limits on how high the emissions from credit-using engines can be. These limits are referred to as FEL caps. No engine family may be certified above these caps using credits. These limits provide the manufacturers compliance flexibility while protecting against the

[200] It should be noted that the existing regulations already contain provisions that would discount diesel NO_X+NMHC credits in some cases when they are banked or traded. The reason for this discount is an interest in encouraging engine designs that are significantly cleaner than the 2.4 g/bhp-hr standard while that standard is in effect. There are also similar provisions for gasoline engines and vehicles. While the new regulations do not change these existing provisions, they do account for the previous discount by capping the total discount at 20 percent.

[201] See preceding footnote.

introduction of unnecessarily high-emitting engines. In the past, we have generally set the FEL caps at the emission levels allowed by the previous standard, unless there was some specific reason to do otherwise. However, we proposed much lower FEL caps, because the proposed standard levels were so much lower than the previous levels and because we wanted to ensure that manufacturers did not continue to produce old-technology high-emitting engines under the new program. In today's FRM, for model year 2007 and later diesel engines, we are adopting a more flexible cap for NO_X emissions during the first three years of the program than was proposed, but are adopting the proposed FEL cap for PM emissions. We believe that this approach for NO_X is more consistent with the rest of the ABT program (as is described above) than applying the proposed FEL cap during this interim period. Specifically, model year 2007 through 2009 diesel engines subject to the 0.20 g/bhp-hr standard will not be allowed to have NO_X emissions higher than 2.0 g/bhp-hr, or PM emissions higher than 0.02 g/bhp-hr. The NO_X level represents a conservative estimate of the emission level that is expected under the combined NO_X+NMHC standards that will apply beginning in model year 2004. The proposed NO_X FEL cap of 0.50 g/bhp-hr would not apply until model year 2010. We believe that the higher FEL cap is appropriate during the transition to the much lower standards, to allow some meaningful use of averaging. However, since the 2.0 g/bhp-hr cap is ten times the level of the new standard, it would not be appropriate as a long-term cap.

The PM cap is also lower than the previous standard of 0.10 g/bhp-hr. As noted above, this is being done in connection with the absence of the kind of restrictions on the use of PM credits that are being set for NO_X credits. The NO_X credits restrictions are designed to better coordinate the NO_X ABT program with the NO_X standard phase-in; and the PM standard is not phased-in. Without those types of restrictions, we believe that it is appropriate to adopt the proposed lower FEL cap to prevent the possibility of PM credits being used to delay the implementation of the program and its benefits.

The FEL caps for gasoline vehicles and engines are being set at the previous standards, and the approximate NO_X and NMHC levels inherent in the NO_X+NMHC standards that will apply for model year 2004–2007 engines. Since engine manufacturers will have the option of certifying their engines to a 1.5 g/bhp-hr NO_X+NMHC standard for model years 2004–2007 (instead of the 2005 standard of 1.0 g/bhp-hr), those manufacturers choosing that option, will also be allowed higher FEL caps for model years 2008–2010. All of these FEL caps are shown in Table VI.D–1 and are discussed in more detail in the Response to Comments document. These new FEL caps do not apply for the phase-out engines and vehicles.

TABLE VI.D–1.—NEW FEL CAPS FOR AVERAGING BANKING AND TRADING

	NO_X FEL cap	PM/NMHC FEL cap
HDDE	0.50 g/bhp-hr [a]	0.02 g/bhp-hr PM.
HDGE	0.50 g/bhp-hr [b]	0.30 g/bhp-hr [b] NMHC.
Complete HDGV less than or equal to 10,000 pounds GVWR	0.9 gpm	0.28 gpm NMHC.
Complete HDGV over 10,000 pounds GVWR	1.0 gpm	0.33 gpm NMHC.

[a] The NO_X FEL cap is 2.0 for model years 2007–2009 diesel engines.
[b] The NO_X and NMHC FEL caps are 0.80 and 0.40 g/bhp-hr, respectively, for model years 2008–2010 gasoline engines for manufacturers choosing to certify to the 1.5 g/bhp-hr NO_X+NMHC level in 2004.

D. FTP Changes to Accommodate Regeneration of Exhaust Emission Controls

It is expected that some of the exhaust emission control devices used to meet today's standards will have discrete regeneration events that could affect emission characteristics. For example, NO_X adsorbers incorporate discrete regenerations. The NO_X adsorber stores NO_X under normal conditions until the NO_X storage capacity is nearly full, at which point the regeneration event is triggered to purge the stored NO_X and reduce it across a catalyst. We expect that these regeneration events would be controlled by the engine computer, and would thus be generally predictable. Even passively regenerating catalytic PM trap designs can have discrete regeneration events that can be predictable.

Discrete regeneration events can be important because it is possible for exhaust emissions to increase during the regeneration process. The regeneration of a NO_X adsorber for instance, could result in increased particulates, NMHC and NO_X due to the rich exhaust gas required to purge and reduce the NO_X. We expect that in most cases, the regeneration events will be sufficiently frequent to be included in the measured emissions. Our feasibility analysis projects very frequent regeneration of the NO_X adsorbers, and continuously regenerating PM traps. Nevertheless, this issue becomes a regulatory concern because it is also conceivable that these emission storage devices could be designed in such a way that a regeneration event would not necessarily occur over the course of a single heavy-duty FTP cycle, and thus be unmeasured by the current test procedure. In addition, desulfation of NO_X adsorbers is clearly not likely to occur frequently enough to reliably be caught in the FTP. Since these regeneration events could produce increased emissions during the regeneration process, it will be important to make sure that regeneration is captured or accounted for as part of the certification testing.

In order to ensure control of emissions during regeneration (including desulfation), we will require manufacturers to determine and use a mathematical adjustment of measured emissions to account for increased emissions during infrequent regeneration events that do not occur during the testing. Conversely, we will also require manufacturers to provide us with a consistent reverse adjustment factor for tests in which the regeneration does occur. For example, if a system requires a desulfation after every 20 FTP transient cycles, and PM emissions increase by 0.01 g/bhp-hr during an FTP transient cycle with a desulfation, we

will require measured emissions to be adjusted upward by 0.0005 g/bhp-hr (0.01 g/bhp-hr divided by 20 cycles) for all tests in which that regeneration does not occur. The equivalent reverse adjustment (downward) for tests in which the regeneration does occur would be 0.0095 g/bhp-hr (0.01 g/bhp-hr multiplied by 19/20). The reason that the adjustment downward would be so much larger than the adjustment upward is that it is correcting for a significant emission increase over a single emission test, while the adjustment downward would be correcting for that same emission increase over the other 19 tests. No adjustment will be made for events that are so frequent that they always occur during FTP testing. In designs for which these activities are not commanded at regular intervals, such as those based on changes in backpressure or NO_X levels, the manufacturer would be required to determine an average frequency of the regeneration (during repeat FTP transient tests). In all cases, manufacturers would need to provide information to allow testers to know when an infrequent regeneration has occurred during the test, such as by identifying the controller command signal for this event. If this information is not available, manufacturers would be required to meet the standards during all tests, without regard to whether a regeneration occurs.

E. Improvements to the Test Procedures

In response to manufacturer comments, we are finalizing changes to the test procedures to improve the precision of emission measurements. The changes fully address the manufacturers concerns about the potential effect of measurement precision on the feasibility of the standards. It is important to note that these changes are not intended to make measurements higher or lower, but only to improve the repeatability of the measurements. Based on our experience with these modified test procedures, and our discussions with manufacturers about their experiences, we are confident that these changes will not affect the stringency of the standards. These changes are summarized briefly here. A more complete description can be found in a memorandum to the docket.[202]

Most of the changes being finalized are in three general areas. Many of the changes are to the PM sampling procedure. These include changes to the type of PM filters that are used, and improvements in how PM filters are weighed before and after emission measurements, including requirements for more precise microbalances. Another area includes changes to the dilution air specifications to allow for lower dilution ratios. The final area of change is the NO_X calibration procedure. The new calibration procedures will result in more precise continuous measurement of very low concentrations of NO_X.

Other changes are being made to the regulations to allow for other measurement options. In some cases, manufacturers will be allowed to use their current procedures, even though EPA will adopt the changes for our own testing. The reason for this is that some of these changes may not be convenient or cost-effective in the short term, and manufacturers may be willing to live with some slightly higher measurement variability in order to lower testing costs. We believe that manufacturers should be able to individually optimize their test facilities in this manner. However, it is important for manufacturers to understand that we will conduct our confirmatory testing in the accurate and precise manner specified in these regulations.

We are including a new regulatory provision that specifies the steps that someone needs to go through to demonstrate that their own alternate measurement procedure is as good as or better than the procedure specified by our regulations. This provision is found in 40 CFR § 86.1306–07. It is also worth noting that, although we requested comment on changes to the NO_X humidity correction factors used for FTP testing, we did not receive any such comments. Thus we will continue to use the existing NO_X humidity correction factors for FTP testing.

F. Certification Fuel

It is well established that measured emissions are affected by the properties of the fuel used during the test. For this reason, we have historically specified allowable ranges for test fuel properties such as cetane and sulfur content. These specifications are intended to represent most typical fuels that are commercially available in use. Because today's action is lowering the upper limit for sulfur content in the field, we are also establishing a new range of allowable sulfur content for testing that is 7 to 15 ppm (by weight). We believe that this range best represents the fuel that diesel vehicles will potentially see in use. Beginning in the 2007 model year, these specifications will apply to emission testing conducted for Certification and Selective Enforcement Audits, as well as any other laboratory engine testing for compliance purposes. Because the same in-use fuel is used for light- and heavy-duty highway diesel vehicles, we are also changing the specifications for light-duty diesel vehicle testing.

It is important to note that while these specifications include the maximum sulfur level allowed for in-use fuel, we believe that it is generally appropriate to test using the most typical fuels. We expect that refineries will typically produce diesel fuel with about 7 ppm sulfur, and that the fuel could have slightly higher sulfur levels after distribution. Thus, we expect that we would use fuel having a sulfur content between 7 and 10 ppm sulfur for our emission testing. Should we determine that the typical in-use fuel has significantly more sulfur than this, we would adjust this target upward.

We are including a regulatory change to the heavy-duty gasoline test fuel specifications to make them the same as the recently established Tier 2 fuel specifications for light-duty vehicles. We are also extending to heavy-duty engines and vehicles the Tier 2 allowance for manufacturers to use California test gasoline for certification. As is the case with Tier 2, this allowance does not affect our authority to conduct our own testing using federal fuel. Also consistent with our approach under Tier 2, we will consider requests, prior to manufacturer or EPA in-use testing, to permit preconditioning procedures designed solely to remove the effects of high sulfur gasoline on vehicles produced through the 2007 model year.

We are also allowing as an option the use of the new diesel test fuel beginning in the 2004 model year for vehicles employing sulfur-sensitive technology that are certifying to the Tier 2 standards. This allowance to use the new fuel in model years 2004–2006 will only be available for vehicles for which the manufacturer recommends to the owner that the vehicle be operated on fuel with 15 ppm sulfur or less, where available. Any testing that we perform on these vehicles would also use fuel meeting this lower sulfur specification. This optional certification fuel provision is targeted at encouraging the introduction of low-emission light-duty diesel technologies under the new Tier 2 standards that will be taking effect at that time. The provision accounts for the fact that these vehicles will use the lower sulfur fuel during most, perhaps all, of their operating life, given the clear manufacturer recommendation for use of low-sulfur fuel in these vehicles, combined with prospects for early availability of this fuel under the

[202] Memorandum from Matthew Spears to Docket A–99–06, dated December 6, 2000.

incentive provisions discussed in Section IV, and the assured availability of this fuel by mid-2006. Furthermore, we will allow manufacturers choosing to exercise this option in certifying vehicles for sale in both California and the other 49 states to use a fuel that, on a specification by specification basis, meets the requirements of either the federal or the California fuel specifications. This option is appropriate for light-duty vehicles and trucks since they would otherwise face a very complicated transition period, in which they would need to retest and potentially recalibrate vehicles for as many as four different test fuels during a three-year period.

G. Misfueling Concerns for Light- and Heavy-Duty Diesel Vehicles

As explained in Section III, the emissions standards contained in these regulations will make it necessary for manufacturers to employ exhaust emission control devices that require low-sulfur fuel to ensure proper operation. This action therefore restricts the sulfur content of highway diesel fuel sold in the U.S. There are, however, some situations in which vehicles requiring low-sulfur fuel may be accidentally or purposely misfueled with higher-sulfur fuel. Vehicles operated within the continental U.S. may cross into Canada and Mexico, countries that may not adopt the same low sulfur requirements on the same schedule. High-sulfur nonroad fuel may illegally be used by some operators to fuel highway vehicles. Any of these misfueling events could seriously degrade the emission performance of sulfur-sensitive exhaust emission control devices, or perhaps destroy their functionality altogether.

There are, however, some factors that help to mitigate concerns about misfueling. Most operators are very conscious of the need to ensure proper fueling and maintenance of their vehicles. The fear of large repair and downtime costs may often outweigh the temptation to save money through misfueling. The likelihood of misfueling in Canada and Mexico is lessened by current cross-border shipment practices and prospects for eventual harmonization of standards. Canada has recently expressed its intent to harmonize its fuel regulations with U.S. fuels standards.[203] This would offer vehicle owners the option of refueling with low-sulfur fuel there. Even if Canada were to lag behind the U.S. in mandating low-sulfur fuels, these fuels would likely become available along major through routes to serve the needs of U.S. commercial traffic that have the need to purchase it. In addition, there is less potential for U.S. commercial vehicles needing low-sulfur fuel to refuel in Canada because Canadian fuel is currently more costly than U.S. fuel. As a result, most vehicle owners will prefer to purchase fuel in the U.S., prior to entering Canada, whenever possible. This is facilitated by large tractor-trailer trucks that can have long driving ranges—up to 2,000 miles per tankful or so—and the fact that most of the Canadian population lives within 100 miles of the United States/Canada border.

In Mexico, the entrance of trucks beyond the border commercial zone has been prohibited since before the conclusion of the North American Free Trade Agreement in 1994. This prohibition applies in the U.S. as well, as entrance of trucks into the U.S. beyond the border commerce zone is also not allowed. Since these prohibitions are contrary to the intent of the Free Trade Agreement, a timetable was established to eliminate them.[204] However, these prohibitions remain in force at this time.

The NAFTA negotiations included creation of a ''corridor'' where commercial truck travel occurs, and where Mexico is obligated to provide ''low-sulfur'' fuel. At the time of the NAFTA negotiations, ''low-sulfur'' fuel was considered 500 ppm, which was the level needed to address the needs of engines meeting the 1994 emission standards. The travel prohibition currently in place may be lifted at some point. At that time, the issue of assuring, for U.S. vehicles, the availability of fuel with a sulfur level needed by the new technology may need to be addressed.

Even considering these mitigating factors, we believe it is reasonable to adopt additional measures with very minor costs to manufacturers, fuel distributors, and consumers. First, we are requiring that highway diesel fuel pumps and co-located nonroad diesel fuel pumps be prominently labeled, as described in Section VII.

We are also adopting a requirement that heavy-duty vehicle manufacturers notify each purchaser of a model year 2007 or later diesel-fueled vehicle that the vehicle must be fueled only with the low-sulfur diesel fuel meeting the regulations being adopted in this FRM. We believe this requirement is necessary to alert vehicle owners to avoid higher sulfur fuel in the U.S. and to seek out low-sulfur fuel when operating in areas such as Canada and Mexico where it may not be widely available. We are also requiring that model year 2007 and later heavy-duty diesel vehicles must be equipped by the manufacturer with labels on the dashboard and near the refueling inlet that say: ''Use Low Sulfur Diesel Fuel Only'' or ''Low Sulfur Diesel Fuel Only''. For non-integrated manufacturers, the engine manufacturer will be required to provide such a label to the vehicle manufacturer, which the vehicle manufacturer will be required to install. Optionally, if a vehicle manufacturer chooses to install its own label, the engine manufacturer will not be required to provide the label.

We believe that these measures will help vehicle owners find and use the correct fuel and will be sufficient to address misfueling concerns. Thus, more costly provisions, such as vehicles fuel inlet restrictors, will not be necessary.

We are also requiring that the labeling and purchaser notification requirements described above for heavy-duty vehicles also be applied to the light-duty diesel vehicles certified to the final Tier 2 standards using certification test fuel with 15 ppm or less sulfur. These vehicles are expected to also need the low-sulfur fuel and be equally susceptible to misfueling damage.

H. In-Use Compliance Levels During the Transition Years to New Technologies

The Phase 2 standards will be challenging for diesel and gasoline engine manufacturers to achieve, and will require manufacturers to develop new technologies for their engines. Not only will manufacturers be responsible for ensuring that these technologies will allow engines to meet the standards at the time of certification, they will also have to ensure that these technologies continue to be highly effective in a wide range of in-use environments so that their engines would comply in-use when tested by EPA. However, in the early years of a program that introduces new technology, there are risks of in-use compliance problems that may not appear in the certification process or during developmental testing. Thus, we believe that it is appropriate to adjust the compliance levels for assessing in-use compliance for low emission engines (i.e., diesel engines equipped with the new exhaust emission control devices expected for Phase 2 diesel engines, and gasoline engines

[203] ''Process Begins to Develop Long Term Agenda to Reduce Air Pollution from Vehicles and Fuels'', Environment Canada press release, May 26, 2000.

[204] See NAFTA, Volume II, Annex I, Reservations for Existing Measures and Liberalization Commitments, Pages I–M–69 and 70, and Pages I–U–19 and 20.

employing Tier 2/Phase 2 level technology). This will provide assurance to the manufacturers that they will not face recall if they exceed standards by a small amount during this transition to clean technologies. This approach is very similar to that taken in the Tier 2 final rule, which involves a similar introduction of new technologies (65 FR 6796, February 10, 2000).

Table VI.H–1 shows the in-use adjustments that we will apply to diesel and gasoline engines. These adjustments will be added to the appropriate FELs (or for engines certified to the standards without the use of credits, to the standards themselves) in determining the in-use compliance level for a given in-use mileage. For example, a light HD diesel engine with a useful life of 110,000 miles and a NO_X FEL of 0.20 g/bhp-hr would have an in-use compliance level of 0.30 g/bhp-hr (0.20 + 0.10) throughout its useful life. A heavy HD diesel engine, having a useful life of 435,000 miles and a NO_X FEL of 0.20 g/bhp would have an in-use compliance level of 0.30 g/bhp-hr through 110,000 miles, 0.35 g/bhp-hr from there through 185,000 miles, and 0.40 g/bhp-hr through the remainder of its useful life. The adjustment levels were chosen to be roughly equivalent to the temporary in-use standard adjustments adopted for low-emitting vehicles in the Tier 2 program, accounting for the higher mileage requirements reflected in the useful lives of the larger heavy-duty engines. Note too in the table footnotes the limiting of these adjustments to engine certified to levels below certain threshold levels. This is similar to the approach taken in the Tier 2 rule which applied the in-use standards only to vehicles in certain low-emitting bins.

TABLE VI.H–1.—ADD-ON LEVELS USED IN DETERMINING IN-USE STANDARDS FOR DIESEL & GASOLINE ENGINES

Engine mileage (miles)	Diesel [a] and gasoline [b] NO_X Add-on level to FEL (g/bhp-hr)	Diesel PM Add-on level to FEL (g/bhp-hr)	Gasoline [c] NMHC Add-on level to FEL (g/bhp-hr)
<110,000	0.10	0.01	0.10
110,000 to 185,000	0.15	0.01	[d] N/A
185,000 to 435,000	0.20	0.01	[d] N/A

[a] Applicable to those diesel engines with FELs at or below 1.3 g/bhp-hr NO_X through 2011.
[b] Applicable to those gasoline engines with NO_X FELs at or below 0.5 g/bhp-hr through 2011.
[c] Applicable to those gasoline engines with NMHC FELs at or below 0.3 g/bhp-hr through 2011.
[d] Note that the useful life for gasoline engines is 110,000 miles, so these add-on levels have significance only to that mileage for gasoline engines.

Similar examples apply for diesel engine PM, with the exception that the PM in-use add-on level is a constant 0.01 regardless of mileage. Likewise for gasoline NMHC where the add-on level is a constant 0.10 g/bhp-hr through the 110,000 mile useful life.

These same in-use add-on levels will be applied to the certification SET and NTE levels after applying the SET and NTE multipliers for the purpose of determining the corresponding in-use standards. In other words, for heavy HD diesel engine with a NO_X FEL of 0.20 g/bhp-hr, the in-use SET standard would be 0.30, 0.35, and 0.40 g/bhp-hr in each respective mileage range (remember that the SET multiplier is 1.0 × the FTP standard or FEL). The in-use NTE standard, with a multiplier of 1.5 × the FTP standard or FEL, would be 0.40, 0.45, and 0.50 g/bhp-hr in each of the respective mileage ranges (0.20 × 1.5 = 0.30; + 0.1 = 0.40; + 0.15 = 0.45; + 0.20 = 0.50).

Note that these in-use add-on levels apply only to engines certified through the 2011 model year and having FELs below the specified levels. These levels are very low and represent levels we believe will require significant effort by manufacturers to reach. The in-use add-ons are available through 2011 because some diesel engine models may not incorporate the emission control technology until 2010 as a result of the final phase-in schedule. Engine models incorporating these technologies for the first time in 2010 may account for as many as 50 percent of all diesel engines sold in that year. We believe these engine models should be provided the in-use adjustment for at least the first two years of their market introduction. In the case of gasoline engines, the phase-in ends in the 2009 model year. However, we have decided to allow the in-use adjustments through model year 2011, consistent with the diesel provision.

For HD complete gasoline vehicles, and any complete diesel vehicles choosing the chassis certification option, we will have a flat in-use adjustment of 0.1 g/mile NO_X, 0.100 g/mile NMHC (gasoline vehicles only), and 0.01 PM for all weight classes. These in-use adjustments will apply only to those vehicles certified with FELs at or below the applicable Phase 2 standards. Further, they will apply for vehicles certified through 2010 so that those vehicle models newly certified to the Phase 2 standards in 2009 are given two years of certification experience prior to elimination of the in-use adjustments. Table VI.H–2 shows the adjustments that will apply to HD chassis certified vehicles.

TABLE VI.H–2.—IN-USE ADJUSTMENTS FOR CHASSIS CERTIFIED VEHICLES

Weight range (GVWR)	Durability period (miles)	NO_X [a] (g/mi)	NMHC [a] (g/mi)	PM (g/mi)
8,500 to 10,000 lbs.	120,000	0.1	0.100	0.01
10,000 to 14,000 lbs.	120,000	0.1	0.100	0.01

[a] Applicable to those vehicles with NO_X and/or NMHC FELs at or below the appropriate Phase 2 standards through 2010.

During the certification demonstration, manufacturers will still be required to demonstrate compliance with the unadjusted Phase 2 certification standards using deteriorated emission rates. Therefore,

the manufacturer will not be able to use these in-use standards as the design targets for the engine or vehicle. They will need to project that most engines would meet the standards in-use without adjustment. The in-use adjustments will merely provide some assurance that they would not be forced to recall engines or vehicles because of some small miscalculation of the expected deterioration rates. Furthermore, given that a new diesel fuel will be in place and it will be sold alongside higher sulfur diesel fuel being marketed to the existing fleet, there is a small likelihood of accidental misfueling during the phase-in years as users become familiar with the importance of using the lower sulfur fuel. As discussed in detail in sections III.E and III.F, sulfur has adverse impacts on exhaust emission control devices.

VII. Highway Diesel Fuel Program: Compliance, Enforcement and Downstream Provisions

For the highway diesel fuel sulfur program that we are adopting today to be successful in achieving its large emission reduction goals, it is vital for all parties that are affected by the program to thoroughly understand what is expected of them to comply, what compliance options may apply to them, and how their compliance will be assessed and enforced. If you believe that you are or may be subject to the program, the most important information is found in the regulatory language following this preamble. There, readers will find the detailed legal requirements of the program for each party and how we will assess and enforce compliance with the program requirements.

A key purpose of this preamble is to supplement the regulatory language by providing a context for and an explanation of the requirements of the program. Section IV above discusses in some detail most of the requirements under the highway diesel fuel sulfur program adopted today. In addition, this section (Section VII) builds on the Section IV discussions by addressing specific compliance and enforcement provisions we have adopted in today's rule to ensure that highway diesel fuel standards are met at all points in the distribution system—from the refiner or importer that introduces the fuel into the distribution system, through all the parties that may distribute the fuel, to the retailers and other parties that provide the fuel to its ultimate user. This section also explains certain requirements of the program in more detail.

After touching on a few general aspects of the highway diesel fuel program, this section discusses the compliance and enforcement provisions that apply to refiners and importers and those that apply to the downstream parties that handle diesel fuel. This section also discusses diesel fuel sampling and testing for sulfur, reporting and recordkeeping requirements, limited exemptions from the program, and how liability for any noncompliance would be handled.

A. General Provisions

1. Definition of Diesel Fuel Covered by This Program

In this preamble, we refer to the fuel covered by the program adopted today as ''highway diesel fuel.'' For technical and legal consistency with the Clean Air Act and existing fuels regulations, the regulatory language associated with today's rule uses the term ''motor vehicle diesel fuel'' in order to assure consistency with the language in existing laws and regulations. ''Nonroad diesel fuel'' refers to diesel fuel intended for use in nonroad vehicles or equipment, and is not covered by the highway diesel fuel sulfur requirements of the program. However, any fuel that is available for highway vehicles and engines, whether or not it is also available for nonroad vehicles and engines or for other purposes, is treated as highway diesel fuel under today's program.

2. Relationship to Highway Diesel Standards

As discussed in Section IV above, today's final rule reduces the sulfur cap standard for highway diesel fuel from 500 ppm to 15 ppm nationally [205] effective in 2006. (Implementation dates are discussed further in Section VII.C.2. below.) The existing standards for cetane and aromatics will remain in effect and are not being changed by today's action (40 CFR § 80.29(a)). The highway diesel fuel sulfur, cetane, and aromatics standards will be enforced through sampling and testing at all points in the distribution system, combined with inspection of fuel delivery records and other commercial documents. The general compliance requirements of this rule are very similar to those in the current diesel fuel rule, except that the sulfur standard is substantially more stringent (see 40 CFR 80.29 and 80.30). Prior to the implementation dates for today's rule, all the requirements and prohibitions of the current diesel fuel rule will remain in effect, with limited modifications concerning sulfur sampling methods.

B. What Are the Requirements for Refiners and Importers?

1. General Requirements

As discussed earlier in this preamble, the sulfur sensitivity of emission controls that will be used on model year 2007 and later motor vehicles requires that the sulfur content of highway diesel fuel dispensed into 2007 and later heavy-duty vehicles not exceed 15 ppm. To ensure that highway diesel fuel meets this standard as it leaves the refinery or import facility, today's final rule adopts the proposed approach that if the sulfur content of highway diesel fuel at a refinery or import facility exceeds 15 ppm by any amount, the fuel is in violation of the sulfur standard. The determination of compliance with the sulfur standard for highway diesel fuel at the refinery level is not subject to a test tolerance.[206]

Consistent with the proposal, today's final rule does not require that refiners or importers engage in mandatory sampling and testing of every batch of highway diesel fuel they produce or import.[207] This is because the highway diesel fuel sulfur standard is a national cap standard and compliance can be monitored at any point in the distribution system by taking samples of fuel for testing. However, under the presumptive liability scheme, any refiner producing noncomplying product would face liability for fuel in violation of the standard, regardless where the violation is discovered. (See Sections VII.G. and VII.H. for a discussion of liability and penalties.) Consequently, we expect that refiners and importers will voluntarily test every batch of highway diesel fuel produced or imported for their own purposes, including the need to demonstrate compliance with pipeline specifications.

Today's program requires all refiners that on January 1, 2000 produced—or by June 1, 2006 expect to produce—highway diesel fuel for U.S. sale to

[205] Except as noted elsewhere in the preamble and final rule, today's rule applies to all states, including the State of California. See Section IV.F for unique implementation provisions for Alaska and exemptions for diesel fuel in certain U.S. territories.

[206] However, test variability is taken into account in determination of compliance for diesel fuel at locations downstream of the refinery or import facility. See Section VII.C.1.

[207] However, any refiner producing highway diesel fuel complying with the 500 ppm standard for use in pre-model year 2007 motor vehicles, under any of the several refiner flexibility options, would have to maintain records designating each batch as complying with the 15 ppm standard or the 500 ppm standard.

register with EPA. Similarly, all importers that on January 1, 2000 imported—or by June 1, 2006 expect to import—highway diesel fuel into the U.S. also need to register with EPA. This registration process will provide an essentially complete and up-to-date picture of the universe of highway diesel suppliers that exist at the beginning of this program. Refiners and importer must register by December 31, 2001. See Section VII.E. below for more details about registration requirements.

2. Refiner and Importer Temporary Compliance Option Provisions and the Credit Trading Program

As described in Section IV.A.2 above, today's final rule adopts a program that allows refiners and importers to transition in the production and importation of 15 ppm sulfur content diesel fuel. The temporary compliance option is available to all refiners and importers and includes a credit averaging, banking, and trading program. This temporary compliance option allows a refiner or importer to designate and sell a certain percentage of its highway diesel fuel as fuel subject to a 500 ppm sulfur standard, for use in pre-2007 model year heavy-duty vehicles.

Section IV.A.2 above describes most of the compliance requirements associated with the temporary compliance option. The paragraphs below supplement the earlier information.

a. Early Credits Program

As discussed in Section IV.A.2.a, today's regulation allows refiners and importers to generate early credits (prior to June 1, 2006) under limited circumstances. Most of the compliance requirements associated with the early credits program are described in that section. The following paragraphs add certain supplemental information.

The early credits program has two sets of provisions: (1) credits generated after May 31, 2005 but before June 1, 2006, and (2) credits generated after June 1, 2001 but before May 31, 2005. For a refiner or importer to generate early credits after May 31, 2005, it must demonstrate that the 15 ppm fuel produced early was segregated in the distribution system and not commingled with current 500 ppm sulfur fuel. Only that volume the refiner could verify was actually sold as 15 ppm fuel at retail or to centrally-fueled fleets would be eligible for early credits. Prior to generating credits, the refiner or importer must submit a notification to EPA and demonstrate how it will ensure segregation of the fuel from other highway diesel fuel and that the fuel will be sold as 15 ppm fuel (*e.g.,* through voluntary pump labeling and/or through information provided in PTDs).

The program also specifies that early credits can be generated prior to June 1, 2005. In this case, however, the refiner or importer must demonstrate that the 15 ppm fuel will be used in vehicles certified to meet the 2007 particulate matter standard being adopted today for heavy-duty engines (0.01 g/bhp-hr) or in vehicles with retrofit technologies that achieve emission levels equivalent to the 2007 NO_X or PM standard verified as part of a retrofit program administered by EPA or a state. (See Section VIII for further discussion of the credit program for heavy-duty engines.) To meet this condition, the refiner or importer must notify EPA, and in its notification it must demonstrate that any early credits that it claims are only for the volume of 15 ppm fuel that is dispensed into vehicles meeting the emission standards as described above (*e.g.,* into designated fleet vehicles).

All early credits generated, banked, transferred, obtained or used must be identified as early credits in records and in reports. The refiner's annual pre-compliance reports must provide the volume of early credit fuel produced, credits generated, credits transferred, and continued demonstration that the early credit fuel is sold appropriately (*i.e.,* as 15 ppm fuel after May 31, 2005, or into vehicles meeting the 2007 standards up to May 31, 2005).

b. Credit Use in a Credit Deficit Situation

Today's rule allows a refinery or importer to have a credit deficit in any given year (as long as the deficit does not exceed five percent of its annual highway diesel fuel production) so long as the refinery or importer makes up for that credit deficit the next year. In other words, the year following the deficit the refiner or importer must have enough credits (or actual production volume of 15 ppm fuel) to cover the previous year's deficit and to cover the current year's compliance. A refinery or importer (by PADD) must use credits to cover its own compliance before it can transfer credits to another refinery or importer, and although a refinery is allowed to be in deficit for a given year, it cannot lawfully transfer credits in the deficit year.

c. Resolving Issues of Invalid Credits

We recognize that there is potential for credits to be generated by one party and subsequently purchased and used in good faith by another party, yet the credits are later found to have been calculated or created improperly, or otherwise found to be invalid. As with the RFG rule and the Tier 2/Gasoline Sulfur rule, invalid credits purchased in good faith cannot be legally used. To allow such use would not be consistent with the environmental goals of the regulation. Further, both the seller and purchaser of invalid credits would have to adjust their credit calculations to reflect the proper credits and either party (or both) could be deemed in violation if the adjusted calculations demonstrated noncompliance.

Nevertheless, our strong preference is to hold the credit seller liable for the violation, rather than the credit purchaser. As a general matter we would expect to enforce a shortfall in credit compliance calculations against the credit seller, and we would expect to enforce a compliance shortfall (caused by the good faith purchase of invalid credits) against a good faith purchaser only in cases where we are unable to recover sufficient valid credits from the seller to cover the shortfall. Moreover, in settlement of such cases we would strongly encourage the seller to purchase credits to cover the good faith purchaser's credit shortfall. EPA will consider the covering of a credit deficit through the purchase of valid credits a very important factor in mitigation of any case against a good faith purchaser, whether the purchase of valid credits is made by the seller or by the purchaser.

d. Compliance Provisions

Today's rule includes compliance provisions under the temporary compliance option to allow the determination of the volumes of each of the two grades of highway diesel fuel produced or imported by each participating refinery or importer. For parties participating in the credit program, the rule includes provisions to ensure compliance with the credit generation, banking and trading provisions. The requirements include the designation of each batch of highway diesel fuel as meeting either the 500 ppm sulfur standard or the 15 ppm highway diesel sulfur standard; maintenance of records concerning the volumes of each grade of highway diesel fuel produced (and for foreign refiners and importers, volumes by PADD of import); and maintenance of records concerning the generation, use, transfer and purchase of credits, if applicable (by PADD in the case of foreign refiners and importers). Beginning in 2007, annual compliance reports demonstrating compliance with the applicable provisions are required. These recordkeeping and reporting

requirements are discussed more fully in Section VII.E below.

The rule also includes enforcement and compliance provisions to assure that highway diesel fuel subject to the 15 ppm sulfur standard is not caused to exceed the standard by being contaminated with highway diesel fuel subject to the 500 ppm sulfur standard (or other high sulfur products such as nonroad diesel fuel), and to assure that 500 ppm diesel fuel is not introduced into model year 2007 and later motor vehicles. Participating refiners and importers are required to provide identifying information on product transfer documents for highway diesel fuel subject to the 500 ppm standard to help prevent contamination of 15 ppm product. (As discussed more fully below, transfers of 15 ppm highway diesel fuel must also be accompanied by product transfer documents identifying such fuel.)

e. Additional Provisions for Importers of Diesel Fuel and for Foreign Refiners Subject to the Temporary Compliance Option and Hardship Provisions

Since today's final rule includes several compliance options that can be used by diesel fuel importers and foreign refiners, we are also including specific compliance and enforcement provisions to ensure compliance for imported highway diesel fuel. These special foreign refiner provisions are similar to those under the conventional gasoline regulations and the gasoline sulfur regulations (see 40 CFR 80.94 and 80.410).

Under today's rule, standards for highway diesel fuel produced by foreign refineries must be met by the importer, unless the foreign refiner has been approved to produce highway diesel fuel under the temporary compliance option or hardship provisions of today's rule. If the foreign refiner is so approved, the volume requirements are to be met by the foreign refinery and the foreign refinery would be the entity generating, using, banking or trading credits for the highway diesel fuel produced and imported into the U.S.

Any foreign refiner that applies for and obtains approval to produce highway diesel fuel subject to the temporary compliance option or hardship provisions will be subject to the same requirements as domestic refiners operating under the same provisions. Additionally, foreign refiners are subject to provisions similar to the provisions at 40 CFR 80.94 and 80.410, which include:

—Segregating highway diesel fuel produced at the foreign refinery until it reaches the U.S. and separately tracking volumes imported into each PADD;
—Controls on product designation;
—Load port and port of entry testing;
—Attest requirements; and
—Requirements regarding bonds and sovereign immunity.

These provisions aid the Agency in tracking highway diesel fuel from the foreign refinery to its point of import into this country. We believe these provisions are necessary and sufficient to ensure that foreign refiners' compliance can be monitored and that the requirements of today's rule can be enforced against foreign refiners. (For more discussion of the rationale for these enforcement provisions, see preamble to the final RFG/CG foreign refineries rule (see 62 FR 45533 (August 28, 1997) and the gasoline sulfur rule, 40 CFR 80.410).)

3. Refiner Hardship Provisions

a. General Refiner Hardship Provisions

Section IV.C. above describes two types of hardship provisions for which any refiner may petition. We will consider such petitions in cases of extreme unforseen circumstances and of extreme hardship circumstances. Petitions for extreme unforseen circumstances may be submitted at any time; petitions for extreme hardship circumstances must be submitted to EPA by June 1, 2002. If any relief granted includes allowing the refiner to produce 500 ppm highway diesel fuel (or additional 500 ppm highway diesel fuel beyond that allowed under the temporary compliance option) for use in pre-2007 heavy-duty vehicles and engines, we would apply enforcement provisions at least as stringent as those that apply for the temporary compliance option.

Any application for hardship relief later found to be based on false or inaccurate information will be void ab initio.

b. Small Refiner Hardship Provisions

Section IV.C.1 above describes three small refiner relief provisions. Section IV.C.1.b defines ''small refiner,'' Section IV.C.1.c describes the special provisions that approved small refiners are eligible for, and Section IV.C.1.d describes how a refiner applies for status as a small refiner. Section VII.E below describes the additional information that small refiners need to include in their application for small refiner status, in their pre-compliance reports, and in their annual compliance reports (these requirements vary depending on which small refiner provision they choose). Any application for small refiner status will be void ab initio if approval is based on false or inaccurate information.

For an approved small refiner to use the Diesel/Gasoline Compliance Date Option (described in Section IV.C. above) at one or more refineries, it must fulfill two main conditions: (1) 100 percent of the highway diesel volume it produces during each annual compliance period starting June 1, 2006 must meet the 15 ppm standard, and (2) the actual volume of highway diesel fuel it produces during each annual compliance period through 2010 must be at least 85 percent of its 1998–1999 baseline highway diesel fuel volume (i.e., through the end date of the extended small refiner interim gasoline program). If a refiner at some point did not fulfill one or both of these conditions, it would forfeit the entire three year extension (or any remaining portion of the extension) of its Tier 2/Gasoline Sulfur small refiner standards and would thus need to comply with the 30/80 ppm sulfur standards by January 1, 2008. During the period when the national gasoline sulfur standard would otherwise be in effect for a small refiner (2008–2010), if the refiner fails to meet the two conditions above, it would be subject to the 30/80 gasoline sulfur standard for that year and future years.

However, a small refiner may elect to petition EPA to permanently opt out of this Diesel/Gasoline Compliance Date Option and opt into another small refiner option or into the temporary compliance option, so long as it does so for the full year that the change in program options takes place. Once it makes that election, it must thereafter meet the 30/80 gasoline sulfur standard.

c. Relief for Refiners Supplying Gasoline to the Tier 2 Geographic Phase-In Area (GPA)

As discussed in Section IV.B, refiners or importers supplying gasoline to the Geographic Phase-In Area (GPA) established in the Tier 2/Gasoline Sulfur program may apply for an additional two years to meet interim Tier 2 GPA gasoline sulfur standards (through December 31, 2008). Similar to the criteria for small refiners under the Diesel/Gasoline Compliance Date Option above, a refiner wishing to receive this extension of the Tier 2 GPA standards must meet two main conditions: (1) 100 percent of the highway diesel volume it produces during each annual compliance period starting June 1, 2006 must meet the 15 ppm standard, and (2) the actual volume of highway diesel fuel it produces during each annual compliance period through 2008 must be at least 85 percent

of its 1998–1999 baseline highway diesel fuel volume (i.e., through the end date of the extended GPA gasoline program). Refiners may not participate both in this option and the temporary compliance option.

To be eligible for this option, a refiner must apply to EPA in writing by December 31, 2001, at the same time that it registers as a highway diesel fuel producer with EPA. As with applications by refiners for ''small refiner'' status, a refiner's application must submit its average annual highway diesel volume baseline for 1998 and 1999 for each of its refineries it expects to be covered by the GPA provisions under today's program.

If a refiner did not fulfill one or both of the conditions above, it would forfeit the entire two-year extension of the GPA standards, or any remaining extension, and would thus need to comply with the 30/80 ppm sulfur standards by January 1 of the following year.

However, a refiner may elect to petition EPA to permanently opt out of this GPA program and opt into the temporary compliance option, so long as it does so for the full year that the change in program options takes place. Once it makes that election, it must thereafter meet the 30/80 gasoline sulfur standard.

C. What Requirements Apply Downstream of the Refinery or Import Facility?

1. Downstream Enforcement of the Standards

In the NPRM, we proposed an industry-wide 15 ppm cap on sulfur content for highway diesel fuel. In the proposal we stated our belief that refiners would likely have to produce diesel fuel meeting a 7–8 ppm average sulfur content in order to ensure compliance downstream. We received comments to the NPRM indicating that enforcing the 15 ppm sulfur cap at all levels of the distribution system downstream of the refinery or import facility would effectively require refiners to produce diesel fuel having a maximum sulfur content of 7 ppm due to variability in sulfur content test results that may occur between laboratories when testing the same sample of diesel fuel for sulfur content. Commenters stated that at test reproducibility level of +/−4 ppm,[208] refiners would have no assurance of downstream compliance with the 15 ppm cap if they produced any fuel with a sulfur content greater than 7 ppm. Consequently, commenters suggested either that we adopt a less stringent downstream sulfur standard, based on test variability, as was done in the Tier 2/Gasoline Sulfur rule (40 CFR 80.210), or that we state a downstream test tolerance, based on test variability.

After considering the comments, we agree that it is appropriate to recognize test variability in determination of compliance with the sulfur standard downstream of the refinery or import facility. However, we anticipate that the reproducibility of sulfur test methods is likely to improve to two ppm or even less by the time the rule goes into effect. Thus, today's rule provides that for all 15 ppm sulfur highway diesel fuel at locations downstream of the refinery or import facility, sulfur test results can be adjusted by subtracting 2 ppm to account for the expected reproducibility of sulfur test methods. The sole purpose of this downstream compliance provision is to address test variability concerns. With this change, we anticipate that refiners will be able to produce diesel fuel at an average level of approximately 7–8 ppm, as was intended by the proposal, without fear of causing a downstream violation due solely to test variability. As test methods improve in the future, we may reevaluate whether two ppm is the appropriate allowance for purposes of this compliance provision.

This change is not expected to undermine the environmental goals of the regulation since it should not result in diesel fuel exceeding the 15 ppm sulfur standard at any point in the distribution system. All highway diesel fuel subject to the 15 ppm standard is still required to meet the 15 ppm standard at the refinery gate, without allowance for test variability.[209] The purpose of taking testing variability into account in compliance determinations for fuel sampled downstream of the refinery or import facility is merely to ensure that fuel actually meeting the 15 ppm cap is not rejected by pipelines or otherwise treated as noncompliant due to concerns about testing variability. It is not expected to result in any increase in the actual sulfur content of highway diesel fuel above 15 ppm at any point in the distribution system.

2. Other Provisions

a. Implementation Dates

As discussed in Section IV.A, today's rule staggers the implementation dates for highway diesel fuel for use in 2007 and later vehicles to comply with the 15 ppm sulfur standard, based on a facility's position in the distribution system. Refiners and importers must meet the 15 ppm sulfur standard by June 1, 2006. Fuel in the distribution system downstream of the refinery or import facility, including fuel at truck loading terminals,but not including fuel at retail outlets or wholesale purchaser-consumers, must be in compliance by July 15, 2006. Highway diesel fuel at retailers' and wholesale purchaser-consumers' storage tanks must be in compliance by September 1, 2006, and pump labeling requirements (see Section VII.C.2.c below) also must be in place by that date. We believe the dates finalized in today's rule will allow sufficient time for downstream parties to transition tanks from 500 ppm sulfur levels to 15 ppm sulfur levels.

The date by which all highway diesel fuel produced by refiners must meet the 15 ppm sulfur standard is June 1, 2010.[210] The final compliance date for all highway diesel fuel in the distribution system to meet the 15 ppm standard, other than at retail outlets and wholesale purchaser-consumer facilities, is October 1, 2010. The final compliance date for all highway diesel fuel at retail and wholesale purchaser-consumer facilities to meet the 15 ppm sulfur standard is December 1, 2010.

b. Product Segregation and Contamination

Under today's diesel sulfur program, it is imperative that distribution systems segregate highway diesel fuel from high sulfur distillate products such as home heating oil and nonroad diesel fuel. The sulfur content of those products is frequently as high as 3,000 ppm. We are also concerned about potential misfueling at retail outlets and wholesale purchaser-consumer facilities, even if segregation of the different grades of diesel fuel has been maintained in the distribution system. Thus, certain downstream compliance and enforcement provisions of the rule are aimed at both preventing contamination of highway diesel fuels with fuels containing higher levels of sulfur, and preventing misfueling of motor vehicles with high sulfur fuels.

Similarly, it is imperative that all parties in the distribution system avoid contamination of 15 ppm highway diesel fuel with 500 ppm highway diesel fuel. Thus, the final rule has adopted a requirement for product

[208] The NPRM preamble suggested a possible reproducibility level of 4 ppm.

[209] Once motor vehicle diesel fuel is moved from the tank in which it was blended at the refinery (and which the refiner's designation of the fuel as meeting the 15 ppm standard was based), the two ppm adjustment applies.

[24] Under the temporary compliance option, for the period from January 1, 2010 through May 31, 2010, refiners can produce 500 ppm fuel only through the use of credits.

transfer documents accompanying deliveries of motor vehicle diesel fuel diesel fuel to identify the sulfur standard it meets and its allowed use. All parties in the distribution system face liability if highway diesel fuel is contaminated such that it fails to meet the applicable standard.

We are also adopting provisions designed to discourage the downgrading of 15 ppm diesel to 500 ppm diesel in the distribution system during the initial years of the program when the optional compliance provision is in effect. Our concern is that if 15 ppm diesel is routinely downgraded and sold as 500 ppm fuel, this practice could lead to availability problems (*i.e.,* risk of 15 ppm not being widely available across the country). We fully recognize that some amount of 15 ppm downgrading will be necessary where the 15 ppm fuel becomes contaminated in the distribution system (*e.g.,* pipeline interfaces). In fact, one advantage of the temporary compliance option is that if 15 ppm fuel becomes contaminated, it can still be sold as highway fuel (downgraded to 500 ppm fuel), rather than downgrading it to off-highway fuel. However, we also recognize that there is the potential for parties in the distribution system to intentionally mix 15 ppm product with 500 ppm fuel, and still sell the product as 500 ppm fuel. While we don't expect this practice to be widespread, it could occur, especially where there is only a small price differential between the two fuels.

Therefore, we are restricting the volume of 15 ppm fuel that can be downgraded to 500 ppm highway diesel fuel at each point in the distribution system (downstream of the refinery gate) to not more than 20 percent on an annual basis. Each party in the distribution system subject to this provision will be required to meet this requirement separately, based on the amount of 15 ppm fuel it receives and transfers/sells to the next party (or end user, in the case of retailers and wholesale purchaser-consumers) on an annual basis. We believe that this limit will be more than sufficient to allow for some downgrading for any contamination that may occur, while still being restrictive enough to discourage downgrading and commingling of 15 ppm fuel with 500 ppm fuel. These provisions will be in effect through May 31, 2010.

We recognize that, in some parts of the country, highway-grade diesel fuel is commonly sold into off-highway markets, due to limitations in the distribution system for carrying one grade of diesel. We do not want to preclude this practice in the future; thus, we are not preventing 15 ppm diesel from being downgraded to off-highway fuel. The downgrading restriction applies only to 15 ppm downgraded to 500 ppm highway diesel fuel. We do not anticipate increased instances of downgrading to off-highway diesel fuel relative to today, given the increase in the price differential between highway diesel and off-highway diesel fuel that will likely result from this program. Therefore, we do not believe it is necessary to impose a regulatory restriction on downgrading of 15 ppm highway diesel to off-highway diesel.

All parties in the distribution system downstream of the refinery gate are subject to this provision, except for those retailers that offer for sale and wholesale purchaser-consumers that use 15 ppm fuel (either as the only grade of diesel or in addition to 500 ppm diesel). In other words, the only retailers and wholesale purchaser-consumers that are subject to this requirement are those that offer for sale or use only 500 ppm diesel (but not 15 ppm diesel).

Since all parties in the distribution system are required by other provisions in this final rule to maintain product transfer documents, which will indicate whether the diesel fuel meets the 15 ppm or 500 ppm standard as well as the volume of such fuel, we are not requiring new recordkeeping requirements beyond these to demonstrate compliance with these provisions. The parties will merely have to ensure that at the end of each year during the period the temporary compliance option is in effect that they comply with the 20 percent requirement based on the incoming and outgoing PTD records described in Section VII.E.5 below.

c. Diesel Fuel Pump Labeling

As discussed in Section IV.A.2 above and in the Chapter IV of the RIA, we believe that clear information about the proper fuel to use and the consequences of misfueling will minimize the potential for misfueling of new-technology vehicles. Under our final fuel program approximately 75% of the fuel in each PADD will meet the 15 ppm standard during the first few years. We believe that this will ensure that the fuel will be widely available in every part of the United States. Moreover, within four years all highway diesel fuel will meet this standard. Under these circumstances we believe the potential for misfueling will be limited. Nevertheless, we did receive considerable comment expressing concerns over the potential for misfueling.

In addition to the required labels on diesel fuel pumps described below, we believe that the use of unique nozzles, color-coded scuffguards, or dyes to distinguish the grades of diesel fuel may be useful in preventing accidental misfueling. While we are not finalizing any requirements today, we will plan to work with the vehicle manufacturers and representatives of the fuel industry and other interested stakeholders over the next several years to develop workable solutions that are consistent with current industry practices and other regulatory requirements.

For any multiple-fuel program like the temporary compliance option adopted today, clearly labeling diesel fuel pumps is vital for end users to distinguish between the two grades of fuel. We received comments on the NPRM that concurred with our assessment in the proposal that pump labels, in conjunction with vehicle labels, would also have the effect of helping to help prevent misfueling of motor vehicles with high sulfur diesel fuel. Section VI.G. above describes the labels that manufactures will place on vehicle and information that will be provided to vehicle owners. Today's rule also adopts pump labeling requirements for retailers and wholesale purchaser-consumers similar to those we proposed, but with modifications to account for the availability of diesel fuel subject to the 500 ppm sulfur standard for use in pre-2007 motor vehicles. The text of the labels appears below; the specific requirements for label size and appearance are found in the regulatory language for this rule.

For pumps dispensing 15 ppm diesel fuel, the label will read as follows:

LOW-SULFUR DIESEL FUEL

Recommended for use in all diesel highway vehicles.

Required for model year 2007 and later highway vehicles.

For pumps dispensing 500 ppm diesel fuel the label will reads as follows:

HIGH-SULFUR DIESEL FUEL—WARNING

May damage model year 2007 and later highway vehicles.

Federal Law *prohibits* use in these vehicles.

Finally, for pumps dispensing nonroad diesel fuel that are located at the same retail outlet as highway diesel fuel pumps, the label will read as follows:

NONROAD DIESEL FUEL—WARNING

May damage highway vehicles.

Federal Law *prohibits* use in any highway vehicle.

3. Use of Used Motor Oil in New Diesel Vehicles

We understand that used motor oil is sometimes disposed of by blending it with diesel fuel for use as fuel in diesel vehicles. Such practices range from blending used motor oil directly into the vehicle fuel tank, to blending it into the fuel storage tanks, to blending small amounts of motor oil from the vehicle crank case into the fuel system as the vehicle is being operated. To the extent such practices could cause vehicles to exceed their emissions standards, the person blending the oil, or causing or permitting such blending, could be considered to be rendering emission controls inoperative in violation of Section 203 of the CAA and potentially liable for a civil penalty (Section 203(a)(3) of the Act, 42 U.S.C. 7522(a)(3)).

Since current formulations of motor oil contain very high levels of sulfur, the addition of used oil to highway diesel fuel could substantially impair the sulfur-sensitive emissions control equipment expected to be used by engine manufacturers to meet the emissions standards in today's rule. Depending on how the oil is blended, it could increase the sulfur content of the fuel burned in the vehicle by as much as 200 ppm. As a result, we believe blending used oil into highway diesel fuel could render inoperative the emission control technology on the vehicle and potentially cause driveability problems.

Therefore, today's rule prohibits any person from introducing or causing or allowing the introduction of used motor oil, or diesel fuel containing used motor oil, into the fuel delivery systems of vehicles manufactured in model year 2007 and later. The only exception to this is where the engine is explicitly certified to the emission standard with oil added and the oil is added in a manner consistent with the certification. Please refer to the Response to Comments document for a discussion of concerns raised by commenters on this issue.

4. Use of Kerosene in Diesel Fuel

As we discussed in the NPRM, kerosene is commonly added to highway diesel fuel to reduce fuel viscosity in cold weather. Today's rule will not limit this practice. Consistent with the proposal, under today's rule, kerosene that is used, intended for use, or made available for use as or for blending with 15 ppm sulfur highway diesel fuel is itself required to be classified as ''motor vehicle diesel fuel'' and meet the 15 ppm standard, as well as the standards for aromatics and cetane (see Section 80.2(y) of the regulatory language following this preamble). This classification for highway fuel use may be made by the fuel's refiner or may be made by a downstream party at the point when that party chooses to use the kerosene in its possession for highway fuel use.

To help ensure that only distillates that comply with the 15 ppm highway diesel fuel standard are blended into 15 ppm highway diesel fuel, today's rule has adopted the proposed requirement that kerosene meeting the 15 ppm standard and distributed by the transferring party for use in motor vehicles, must be accompanied by PTDs accurately stating that the product meets the 15 ppm sulfur standard (See Section VII.E.5. below).

As a general matter, any party who blends kerosene, or any blendstock, into motor vehicle diesel fuel, or who produces motor vehicle diesel fuel by mixing blendstocks, is a refiner and would be subject the requirements and prohibitions applicable to refiners under the rule. However, under today's rule, in deference to the longstanding and widespread practice of blending kerosene into diesel fuel at downstream locations, downstream parties who only blend kerosene into motor vehicle diesel fuel will not be subject to the requirements applicable to refiners, provided that they do not alter the fuel in any other way. Further, downstream parties choosing to blend kerosene into 15 ppm highway diesel fuel will be entitled to the 2 ppm adjustment factor for both the kerosene and the diesel fuel into which it is blended at downstream locations, provided that the kerosene had been transferred to the party with a PTD indicating compliance with that standard. Sulfur test results from downstream locations of parties who do not have such a PTD for their kerosene will not be subject to this adjustment factor, either for the kerosene itself, or for the highway diesel fuel into which it is blended.

In order to ensure the continued compliance of 15 ppm fuel with the 15 ppm standard, downstream parties choosing to blend kerosene into 15 ppm highway diesel fuel are required by the final rule to either have a PTD for that kerosene indicating compliance with the 15 ppm standard, or to have test results for the kerosene establishing such compliance.

Any party who causes the sulfur level of 15 ppm highway diesel fuel to exceed 15 ppm by blending kerosene into highway diesel fuel, or by using high sulfur kerosene as highway diesel fuel, would be subject to liability for violating the sulfur standard. Similarly, parties who cause the sulfur level of 500 ppm highway diesel fuel to exceed that standard by blending kerosene into the fuel, would also be subject to liability.

The rule does not require refiners or importers of kerosene to produce or import kerosene meeting the 15 ppm sulfur standard. However, we believe that refiners will produce low sulfur kerosene in the same refinery processes that they use to produce low sulfur highway diesel fuel, and that the market will drive supply of low sulfur kerosene for those areas where, and during those seasons when, the product is needed for blending with highway diesel fuel. Comments to the NPRM regarding this provision generally supported this approach.

5. Use of Diesel Fuel Additives

Diesel fuel additives include corrosion inhibitors, cold-operability improvers, and static dissipaters. Use of such additives is distinguished from the use of kerosene by the low concentrations at which they are used and their relatively more complex chemistry.[211] We proposed that diesel fuel additives used in highway diesel fuel meet the same cap on sulfur content required for the fuel itself. Additive manufacturers commented [212] that there was no need to impose a 15 ppm sulfur cap on such additives in order to effectively limit the sulfur content of finished diesel fuel. They asserted that imposing such a cap would result in unjustified costs and disruptions to the producers and users of diesel additives. Additive manufacturers also stated that for certain additives, such as static dissipaters needed to prevent explosion hazards at terminal facilities, there are currently no effective alternatives that comply with a 15 ppm cap on sulfur content.

Additive manufacturers suggested an approach whereby shipments of additives that have a sulfur content above 15 ppm would be accompanied by a product transfer document (PTD) that includes information on additive sulfur content, maximum recommended treatment rate, and the potential impact

[211] Diesel fuel additives are used at concentrations commonly expressed in parts per million. Diesel fuel additives can include specially-formulated polymers and other complex chemical components. Kerosene is used at much higher concentrations, expressed in volume percent. Unlike diesel fuel additives, kerosene is a narrow distillation fraction of the range of hydrocarbons normally contained in diesel fuel. See Section VII.C.4 above regarding the requirements associated with the addition of kerosene to diesel fuel.

[212] See comments of the American Chemistry Council, Docket Item IV–D–183 in Docket A–99–06 associated with this rule.

on the sulfur content of the fuel when the additive is used at the maximum recommended treatment rate. Under such an approach, they suggested that the use of diesel additives should be permitted to result in an increase in the sulfur content of the finished fuel of less than 0.5 ppm, such that fuel would effectively be required to meet a sulfur cap of 15.5 ppm.

In response to these comments, we are allowing the use of diesel fuel additives with a sulfur content greater than 15 ppm. However, we believe that this can be accomplished without allowing the 15 ppm cap on fuel sulfur content to be exceeded. The 15 ppm cap is based on our understanding of the level that is necessary to ensure the durability and proper operation of the emissions control hardware that will be used to comply with the emissions standards in today's rule. We believe that it is most appropriate for the market to determine how best to accommodate increases in the fuel sulfur content from the refinery gate to the end user, while maintaining the 15 ppm cap, and whether such increases result from contamination in the distribution system or diesel additive use. By providing this flexibility, we anticipate that market forces will encourage an optimal balance between the competing demands of manufacturing fuel lower than the 15 ppm sulfur cap, limiting contamination in the distribution system, and limiting the additive contribution to fuel sulfur content.

Our review of data submitted by additive and fuel manufacturers to comply with EPA's Fuel and Fuel Additive Registration requirements (40 CFR Part 79) indicates that additives to meet every purpose (including static dissipation) are currently in common use which meet a 15 ppm cap on sulfur content (see Chapter IV.D. of the RIA for more information on additives). Since such low-sulfur additives are currently in use side-by-side with high-sulfur additives, it is reasonable to conclude that there is not a significant difference in their cost. Even if not yet available for certain purposes, we believe that it is reasonable to assume that low-sulfur additives will become available before this rule is implemented in 2006. The ability of industry to provide low-sulfur additives is supported by the fact that diesel fuel meeting a 10 ppm cap on sulfur content has been marketed in Sweden for some time, and ARCO Petroleum recently began marketing fuel meeting a 15 ppm sulfur cap in California.

The unusually high sulfur content of a few additives may discourage their use in diesel fuel that meets a 15 ppm sulfur cap. However, it will generally continue to be possible for additive manufacturers to market additives that contain greater than 15 ppm sulfur for use in highway diesel fuel. Such additives can also continue to be used in nonroad diesel fuel. Additive manufacturers that market such additives and blenders that use them in highway diesel fuel will have additional requirements to ensure that the 15 ppm sulfur cap on highway diesel fuel is not exceeded. Although today's rule may encourage the gradual retirement of additives that do not meet a 15 ppm sulfur cap for use in highway diesel fuel, we do not anticipate that this will result in disruption to additive users and producers or a significant increase in cost. Additive manufactures commonly reformulate their additives on a periodic basis as a result of competitive pressures. We anticipate that any reformulation that might need to occur to meet a 15 ppm sulfur cap will be substantially accommodated within this normal cycle.

Today's rule limits the continued use in highway diesel fuel of diesel fuel additives that exceed 15 ppm sulfur to additives that are used at concentrations of less than one volume percent. We believe that this limitation is appropriate and will not cause any undue burden because the diesel fuel additives for which this flexibility was included are always used today at concentrations well below one volume percent. Further, one volume percent is the threshold above which the blender of an additive becomes subject to all the requirements applicable to a refiner (40 CFR 79.2(d)(1).

The specific requirements in today's rule regarding the use of diesel fuel additives are as follows:

—Additives that have a sulfur content at or below 15 ppm must be accompanied by a PTD that states: ''The sulfur content of this additive does not exceed 15 ppm.''

—Additives that exceed 15 ppm sulfur may continue to be used in highway diesel fuel provided that they are used at a concentration of less than one volume percent and their transfer is accompanied by a PTD that lists the following:

(1) The additive's maximum sulfur concentration

(2) The maximum recommended concentration for use of the additive in diesel fuel, and

(3) The contribution to the sulfur level of the fuel that would result if the additive is used at the maximum recommended concentration.

Blenders of additives that exceed 15 ppm in sulfur content will be held liable if their actions cause the sulfur content of the finished fuel to exceed 15 ppm. In some cases, blenders may not find it feasible to conduct testing, or otherwise obtain information on the sulfur content of the fuel either before or after additive blending, without incurring substantial cost. We anticipate that blenders will manage the risk associated with the use of additives above 15 ppm in sulfur content under such circumstances with actions such as the following:

—Selecting an additive with minimal sulfur content above 15 ppm that is used at a low concentration, and

—Working with their upstream suppliers to provide fuel of sufficiently low sulfur content to accommodate the small increase in sulfur content which results from the use of the additive.

This is similar to the way distributors will manage contamination from their distribution hardware (tank trucks, etc.). Distributors will not necessarily test for fuel sulfur content after each opportunity for contamination, but rather will rely on mechanisms set up to minimize the contamination, and to obtain fuel sufficiently below the standard to accommodate the increase in sulfur content from the contamination.

The recordkeeping, reporting, and PTD provisions associated with these requirements are discussed in Section VII.E below. The liability provisions are discussed in Section VII.G below.

D. What Are the Testing and Sampling Methods and Requirements?

1. Diesel Fuel Testing Requirements and Test Methods

As part of the diesel fuel sulfur program adopted today, EPA is designating the test method that we will use in determining compliance for samples collected at all points in the distribution system. This designated method is called ''Test Method for Total Sulfur in Liquid Aromatic Hydrocarbons and Their Derivatives by Oxidative Combustion and Electrochemical Detection,'' or ASTM D 6428–99.

In the notice of proposed rulemaking, we proposed to designate ASTM D 2622–98 with minor modifications as the designated test method for quantifying the sulfur content of diesel fuel. This designated test method would be the one that EPA would utilize in its own laboratory in order to determine whether a given sample taken at any point in the distribution system is in compliance with the appropriate diesel sulfur standard or not. We proposed to apply this designated test method not

just to this final rule, which will be effective in 2006, but also to the existing diesel sulfur requirements, which are currently in effect. The modifications were designed to ensure appropriate precision at low sulfur levels below 15 ppm. Specifically, the modifications consisted of substitution of a measurement blank that more closely resembles the boiling point range and density of diesel fuel and a change to the calibration line to ensure that it goes through zero.[213]

We received several comments related to the proposed test method. Some parties suggested further modifications to ASTM D 2622–98 and others recommended that we select ASTM D 5453–00 entitled, ''Standard Test Method for Determination of Total Sulfur in Light Hydrocarbons, Motor Fuels and Oils by Ultraviolet Fluorescence'' as the designated test method in the regulation. We have considered the comments carefully and agree that it is desirable to choose an accepted ASTM method as our designated test method. However, we do not believe that ASTM D 5453 is capable of measuring all sulfur containing compounds. Specifically, we do not believe that it will measure sulfonates, which are found in certain diesel additives typically added at terminals. Because of the stringent 15 ppm sulfur standard adopted today, the sulfonate compounds in these additives may become significant contributors to the overall sulfur level of the fuel.

Under this final rule, there is no requirement for every-batch testing for refiners or importers. However, because the diesel sulfur standard will be enforced at all points in the fuel distribution system, we believe that refiners and importers will engage in such testing, because satisfactory test results may be used to form the basis for an affirmative defense in the event of a violation. Downstream fuel suppliers such as truck loading terminals that blend additives to highway diesel fuel may not find it practical to engage in testing every time they blend additives into diesel fuel. As described in the previous section, manufacturers of fuel additives will be required to provide appropriate information about how to blend the additive properly (the treatment rate) and will be required to retain samples of additive batches for the prescribed time period in order to demonstrate compliance with this regulation, as discussed in the previous section.

We believe that there is more than one test method that may be used to determine the sulfur content of diesel fuel at low levels and believe that it is appropriate to allow alternative analytical test methods as long as they are correlated to the designated test method to be used by EPA. The ASTM methods that are allowed as alternative test methods under this rule are ASTM D 3120–96, ''Standard Test Method for Trace Quantities of Sulfur in Light Liquid Petroleum Hydrocarbons by Oxidative Microcoulometry.'' and ASTM D 4045–99, ''Standard Test Method for Sulfur in Petroleum Products by Hydrogenolysis and Rateometric Colorimetry.'' Furthermore, we will allow the use of the modified form of ASTM D 2622, which was proposed to be the designated test method, as an alternative test method. As stated above, results from the use of all alternative analytical test methods must be correlated to the designated test method.

We believe that choosing an appropriate ASTM method as our designated test method for enforcement testing purposes and allowing the use of these alternative test methods furthers the purposes of the ''National Technology Transfer and Advancement Act of 1995'' (NTTAA), section 12(d) of Public Law 104–113, and Office of Management and Budget (OMB) Circular A–119. Both of these documents are designed to encourage the adoption of standards developed by ''voluntary consensus bodies'' and to reduce reliance on government-unique standards where such consensus standards would suffice. In the future, we plan to adopt a performance based test method approach that would address the use of these alternative methods, including ''in-house'' test methods developed by individual refiners and importers. We also intend to continue working with the industry and ASTM in the future to develop and improve sulfur test methods, and will consider modifications to today's rule as developments warrant.

We also received comments indicating that there would not be any field test equipment for 15 ppm diesel fuel available by 2006. With regard to field testing, we believe that the technology that will enable the development of appropriate equipment or modifications to existing equipment exists or will be developed in response to the requirements of this rule.

In the NPRM, we discussed a comment received in response to the ANPRM that ASTM D 2622–98 may not be suitable for determining the sulfur content of biodiesel fuel, or mixtures of biodiesel and conventional diesel fuel. In response to the NPRM, we received comment indicating that significant modifications would be required to ASTM D 2622–98 in order to adapt it for use with biodiesel and biodiesel blends. We believe the selected method, ASTM D 6428–99, is appropriate for use with biodiesel and biodiesel blends. However, depending on the product, any of the test methods allowed by this rule may require some adaptation by the operator.

The test method for determination of sulfur in motor oil is ASTM D 4297–96, entitled, ''Standard Test Methods for Elemental Analysis of Lubricant and Additive Components—Barium, Calcium, Phosphorus, Sulfur, and Zinc by Wavelength-Dispersive Fluorescence Spectroscopy.'' This method uses the same apparatus as ASTM D 2622–98, but includes specific methodology to compensate for interferences caused by additives present in motor oil. Consistent with the goals of the NTTAA and OMB Circular A–119, and in order to provide greater flexibility for regulated parties, we recognize that ASTM D 5453–00 may be selected by regulated parties as an appropriate alternative analytical test method for the purpose of measuring sulfur in motor oil.

2. Diesel Fuel Sampling Methods

The final rule adopts the proposed sampling methods. There were no negative comments regarding these technical changes. The requirement to use these methods is effective June 1, 2001. These same methods were adopted for use in the Tier 2/Gasoline Sulfur rule.31[214] These sampling methods are ASTM D 4057–95 (manual sampling) and D 4177–95 (automatic sampling from pipelines/in-line blending). We are requiring the use of these ASTM methods instead of the methods currently provided in 40 CFR part 80, Appendix G, for determining compliance under both the new 15 ppm sulfur standard, and the 500 ppm standard currently in place. That is because these methods have been updated by ASTM, and the updates have provided clarification and have eliminated certain requirements that are not necessary for sampling petroleum products such as diesel fuel.

[213] For a detailed description of the proposed modifications to ASTM D 2622–98, see 65 FR 35530–35531 (June 2, 2000).

[214] 65 FR 6833–34 (Feb. 10, 2000). These methods are also proposed for use under the RFG and CG rules. See 62 FR 37337 *et seq.* (July 11, 1997).

E. What Are the Recordkeeping, Reporting and Product Transfer Document Requirements?

1. Registration of Refiners and Importers

a. All Refiners and Importers

By December 31, 2001, refiners and importers that may produce or supply highway diesel fuel by 2006 must register with EPA. Specifically, refiners and importers that are either currently producing or supplying highway diesel fuel, or that expect to do so by June 1, 2006, must register. The registration must include the following information:

—Corporate name and address of the refiner or importer and any parent companies and a contact person
—Name and address of all refineries or import facilities (including, for importers, the port of entry and PADD)
—A contact person.
—Location of records
—Business activity (refiner or importer)
—Capacity of each refinery in barrels of crude oil per calendar day

b. Prospective Small Refiners

In addition to the basic registration requirements above, a refiner seeking status as a small refiner needs to apply for this status as a part of their registration and provide the average number of employees for all pay periods from January 1, 1999 to January 1, 2000, for the company, all parent companies, and all subsidiaries or joint ventures. The application also must include which small refiner option the refiner expects to use at each of its refineries.

c. Refiners Seeking an Extension of the GPA Gasoline Sulfur Standards

In addition to the basic registration requirements above, a refiner or importer seeking an extension of the special GPA gasoline sulfur standards (see Section IV.B above) must apply for such an extension in their registration.

2. Pre-Compliance Reports

a. All Refiners

As discussed in Section IV above, by June 1, 2003, all refiners and importers must report to EPA on their progress toward compliance with the highway diesel fuel sulfur standards adopted today. Subsequently, these pre-compliance reports are also due on June 1 of 2004 and 2005. EPA will maintain the confidentiality of information submitted in pre-compliance reports. We will present generalized data from the reports on a PADD basis in annual reports following the receipt of each year's pre-compliance reports. These reports are for information purposes only and, while refiners must truthfully report on their projected plans in order for this provision to have any value, we will not hold refiners liable if their actual actions deviate from these reports. We fully expect that refiners' plans may change, which is why we are requiring these reports to be updated annually through 2005.

In their pre-compliance reports, refiners and importers need to include the following information:

—Any changes in their basic corporate or facility information since registration.
—Estimates of the volumes (in gallons) of 15 ppm fuel and, if applicable, 500 ppm fuel to be produced from crude oil in each refinery, as well as the volumes of each grade of highway diesel fuel produced from other sources.
—For entities expecting to participate in the credit program, estimates of numbers of credits to be earned and/or used.
—Information regarding engineering plans (e.g., design and construction), the status of obtaining any necessary permits, and capital commitments for making the necessary modifications to produce low sulfur highway diesel fuel, and actual construction progress. The pre-compliance reports due in 2004 an 2005 must provide an update of the progress in each of these areas.

b. Small Refiners

In addition to the information required for all refiners above, small refiners must provide additional information in their pre-compliance reports. The information required varies according to which small refiner option the refiner plans to use, as discussed in Section IV.C above. The following paragraphs summarize the supplementary information required for each small refiner option.

500 ppm Option

The pre-compliance report for a refiner planning use the 500 ppm Option must make a showing that sufficient sources of 15 ppm fuel will likely exist in the area. If after 2003 the sources of 15 ppm fuel decrease, the pre-compliance reports for 2004 and/or 2005 must identify this change and must include a supplementary showing that the sources of 15 ppm fuel are still sufficient.

Small Refiner Credit Option

Pre-compliance reporting for small refiners choosing this Small Refiner Credit option is identical to that for the 500 ppm option (that is, if the small refiner is also producing 500 ppm highway diesel fuel), with the additional requirement that the refiner also report on any credits it expects to generate and sell.

Diesel/Gasoline Compliance Date Option

Pre-compliance reports from any small refiners expecting to use the Diesel/Gasoline Compliance Date Option must provide information showing that diesel desulfurization plans are on track. In addition to the information about the expansion of desulfurization capacity required above for all refiners, the pre-compliance reports for small refiners expecting to use this option need to reasonably show that the refiner will be in a position by June 1, 2006 to produce of 100 percent of the refiners highway diesel fuel at 15 ppm sulfur at a volume at least 85 percent of its baseline highway diesel volume.

c. GPA Refiners

As with small refiners expecting to use the Diesel/Gasoline Compliance Option above, pre-compliance report from any refiners or importers expecting to use the extension of the GPA gasoline sulfur standards must provide information showing that diesel desulfurization plans are on track. In addition to the information about the expansion of desulfurization capacity required above for all refiners, the pre-compliance reports for prospective GPA refiners need to reasonably show that the refiner will be in a position by June 1, 2006 to produce of 100 percent of the refiners highway diesel fuel at 15 ppm sulfur at a volume at least 85 percent of its baseline highway diesel volume.

3. Annual Compliance Reports

a. All Refiners

After the highway diesel sulfur requirements begin June 1, 2006, refiners and importers will be required to submit annual compliance reports that demonstrate compliance with the requirements of this final rule. The first annual compliance report will be due by the end of February 2007 (for the period of June 1, 2006 through December 31, 2006) and would be required annually through February 2011. A refiner's annual compliance reports must include the following information, for each refinery:

—The volumes of 15 ppm and 500 ppm sulfur highway diesel fuel produced from crude oil during the compliance period, as well as the volumes of each grade of highway diesel fuel produced from other sources.

—The number of credits, if any, used to demonstrate compliance with the 80 percent requirement for 15 ppm sulfur fuel, and their source(s).
—The number of credits, if any generated.

b. Small Refiners

As with pre-compliance reports, small refiners must supply additional information related to the small refiner option they are using in their annual compliance reports.

500 ppm Option and Small Refiner Credit Option

In their annual compliance reports, small refiners choosing the 500 ppm Option or the Small Refiner Credit Option need to show that the volume they produce of highway diesel fuel meeting the 500 ppm sulfur standard meets the lesser of the following values: (1) 105 percent of the average highway diesel volume it produced in calendar years 1998 and 1999 or (2) the average highway diesel volume it produced from crude oil in calendar years 2004 and 2005.

Diesel/Gasoline Compliance Date Option

A small refiner using this option needs to confirm in each annual compliance report that it continues to produce 100 percent of its highway diesel fuel at 15 ppm sulfur and that its highway diesel volume continues to be at least 85 percent of its baseline volume.

4. Initial Confirmation of 15 ppm Fuel Production

Small refiners using the Diesel/Gasoline Compliance Date Option and refiners using the extension of the GPA gasoline sulfur standard must confirm to EPA by July 1, 2006 that they began on June 1, 2006 producing 100 percent of their highway diesel fuel at 15 ppm sulfur.

5. Product Transfer Documents (PTDs)

a. Diesel Fuel

We are adopting the proposed requirements that refiners and importers provide information on commercial PTDs that identifies diesel fuel distributed for use in motor vehicles and that states the fuel complies with the 15 ppm sulfur standard. Since today's rule adopts provisions for production and sale of diesel fuel having a sulfur content of 500 ppm for use in pre-2007 model year vehicles, the rule also adopts provisions requiring PTDs to identify such fuel and state that its use in motor vehicles is limited to pre-2007 motor vehicles.[215] We believe this additional information on commercial PTDs is necessary because of the importance of preventing commingling of highway diesel fuel with high sulfur distillate products, avoiding contamination of 15 ppm highway diesel fuel with 500 ppm highway diesel fuel, and preventing misfueling of model year 2007 and later vehicles with any fuel having a sulfur content greater than 15 ppm. In addition, we are requiring that each PTD include the volume of fuel delivered (for each grade, 15 ppm and 500 ppm), that is necessary to demonstrate compliance with the fuel downgrading restrictions discussed in Section VII.C.2.b above.

Except for transfers to truck carriers, retailers and wholesale purchaser-consumers, product codes may be used to convey the information. More explicit language on PTDs to these parties is necessary since employees of such parties are less likely to be aware of the meaning of product codes. PTDs are not required for transfers of product into motor vehicles at retail outlets or wholesale purchaser-consumer facilities.

To assure that downstream parties can determine whether kerosene, or other distillates, distributed for use for blending into highway diesel fuel to reduce viscosity in cold weather meets the 15 ppm sulfur standard, today's rule adopts the proposed requirement for PTD identification of distillates distributed for such use as meeting the 15 ppm standard.

Today's rule adopts the proposal to retain the current diesel rule's PTD requirement regarding the identification of dyed, tax-exempt highway diesel fuel. This provision is useful for wholesale purchaser-consumers that need to know that the diesel fuel they purchase is appropriate for tax exempt motor vehicle use despite the presence of red dye.[216]

b. Additives

The NPRM proposed that PTDs for additives for use in highway diesel fuel would be required to state that the additive complies with the 15 ppm sulfur standard. Today's rule has been modified to allow the sale of additives, for use by fuel terminals or other parties in the diesel fuel distribution system, that have a sulfur content greater than 15 ppm under specified conditions. As a result, under today's rule the PTD provisions for such additives are modified as follows:

For additives that have a sulfur content not exceeding 15 ppm, the PTD must state: ''The sulfur content of this additive does not exceed 15 ppm.''

For additives that may have a sulfur content exceeding 15 ppm, the additive manufacturer's PTD, and PTDs accompanying all subsequent transfers, must provide: a warning that the additive's sulfur content exceeds 15 ppm; the maximum sulfur content of the additive; the appropriate amount of additive to blend to highway diesel fuel, stated as gallon of additive per gallon of diesel fuel; and the increase in sulfur concentration of the fuel the additive will cause when used at the specified concentration.

The proposed provisions for consumer additives for use in diesel motor vehicles are slightly modified in the final rule due to concerns that additives designed for nonroad engines could accidentally be introduced into motor vehicle engines if they have no label stating appropriate use. Under today's rule consumer additives for use in any diesel engines must be accompanied by information that states that the additive either: complies with the sulfur content requirements for diesel motor vehicles; or that it has a sulfur content exceeding 15 ppm and is not for use in model year 2007 or later motor vehicles. This information is necessary for consumers to determine if an additive is appropriate for diesel motor vehicle use.

6. Recordkeeping Requirements

Refiners that produce (or importers that import) both 500 ppm highway diesel fuel and 15 ppm highway diesel fuel under the temporary compliance option or any hardship program, or that produce only 15 ppm sulfur content diesel fuel and that wish to generate credits (including early credits), must maintain records for each batch of highway diesel fuel produced, of the batch designations and the batch volumes. The refiner must maintain records regarding credit generation, use, transfer, purchase, or termination.

In general, refiners and importers participating in the temporary compliance option or any hardship program must keep records of the following information, as applicable for each refinery (and in the case of foreign refiners, separately by refinery and by PADD of import), or for importers, for each PADD:

—The total volume of highway diesel fuel produced or imported;

[215] Such fuel can also be used in nonroad vehicles, whose fuel is currently unregulated.

[216] The federal tax code requires the use of red dye in both off-highway distillate fuels and in highway diesel fuel sold for tax exempt use.

—The total volume of highway diesel fuel produced or imported meeting the 500 ppm; sulfur standard;
—The total volume of highway diesel fuel produced or imported meeting the 15 ppm sulfur standard;
—For small refiners or GPA refiners using the gasoline sulfur program extensions, a statement of the baseline volume and whether the volume of 15 ppm produced or imported fuel is at least equal to 85 percent of the baseline volume;
—The percentage of highway diesel fuel produced or imported meeting the 15 ppm sulfur standard before inclusion of credits;
—The volume of 15 ppm highway diesel fuel represented by credits;
—The percentage of 15 ppm highway diesel fuel produced or imported that is represented by credits;
—The number of credits in the refinery's or importer's possession at the beginning of the compliance period, separately by early credits and all other credits;
—The number of credits generated during the compliance period;
—The number of credits used, separately by early credits and all other credits;
—If any credits were obtained from or transferred to other parties, for each other party, its name, its EPA refiner or importer registration number, and the number of credits obtained from or transferred to the other party, provided separately for early credits and all other credits;
—The percentage of compliance with the 15 ppm motor vehicle diesel 80 percent volume requirement by use of credits (provided separately for early credits and all other credits);
—The number of credits that will carry over to the next averaging period, provided separately for early credits and all other credits;
—Records regarding test results, including mandatory quality assurance tests; and
—Contracts or other commercial documents that establish each transfer of credits.

Refiners approved for temporary hardship relief due to extreme unforseen circumstances or extreme financial hardship must include certain information in their application for relief. The required information, and the factors we will consider in determining what relief, if any, is appropriate, are discussed in Section IV.B.3. Such refiners will also have reasonable recordkeeping and reporting requirements, which will be fashioned on a case-by-case basis depending on the nature of any temporary waiver approved.

7. Record Retention

Today's rule adopts the NPRM proposal that the retention period for all records required to be kept by the rule is 5 years. This is the same period of time required in other fuels rules, and it coincides with the applicable statute of limitations. We believe that for other reasons, most parties in the distribution system would maintain some or all of these records for this length of time even without the requirement.

This retention period applies to PTDs, records of any test results performed by any regulated party for quality assurance purposes or otherwise, along with supporting documentation such as date of sampling and testing, batch number, tank number, and volume of product. Business records regarding actions taken in response to any violations discovered are also required to be maintained for 5 years.

All records required to be maintained by refiners participating in the temporary compliance option or hardship options (or by importers of diesel fuel produced by a foreign refiner approved for the temporary compliance option or a hardship option), including small refiner and farmer cooperative and GPA options, are also covered by the retention requirement.

F. Are There Any Exemptions From the Highway Diesel Fuel Requirements?

1. Research and Development

Today's rule exempts from the sulfur standards diesel fuel used for research, development and testing purposes (R & D), as was proposed in the NPRM. We recognize that there may be legitimate research programs that require the use of highway diesel fuel with higher sulfur levels than allowed under today's proposed rule. As a result, today's rule contains provisions for obtaining an exemption from the prohibitions for persons distributing, transporting, storing, selling, or dispensing highway diesel fuel that exceeds the standards, where such diesel fuel is necessary to conduct a research, development, or testing program.

Under the rule, parties seeking an R&D exemption are required to submit to EPA an application for exemption that describes the purpose and scope of the program and the reasons that the use of the higher-sulfur diesel fuel is necessary. Upon presentation of the required information, an exemption may be granted at the discretion of the Administrator, with the condition that EPA may withdraw the exemption *ab initio* in the event the Agency determines the exemption is not justified. Fuel subject to this exemption is exempt from the other provisions of today's rule, provided certain requirements are met. These requirements include the segregation of the exempt fuel from non-exempt highway diesel fuel, identification of the exempt fuel on product transfer documents, pump labeling, and where appropriate, the replacement, repair, or removal from service of emission systems damaged by the use of the high sulfur fuel.

2. Racing Vehicles

Today's rule adopts the NPRM proposal to provide no exemption from the sulfur content standard and other requirements of today's rule for diesel fuel used in racing vehicles. In the NPRM, we requested comment on whether such an exemption is needed and we received no comments supporting the need for such exemption. As we stated in the NPRM, we see no advantage for racing vehicles to use fuel having higher sulfur levels (or lower cetane or higher aromatic levels) than are required by today's rule, and we are concerned about the potential for misfueling of motor vehicles that could result from having a high sulfur (*e.g.*, 3,000 ppm) automotive fuel available in the marketplace. Consequently, the rule does not provide an exemption from the highway diesel fuel requirements for vehicles used in racing.

3. Military Fuel

Based on EPA's existing definition of diesel fuel, we previously concluded that JP–8 military fuel is not subject to EPA's existing requirements for diesel fuel. Today's rule revises the definition of diesel fuel so that JP–5 and JP–8 military fuel that is used or intended for use in highway diesel motor vehicles will be subject to all of the requirements applicable to diesel fuel under today's rule.[217] However, today's rule also exempts JP–5 and JP–8 fuels from EPA's diesel fuel requirements if it is used in tactical military vehicles that have a national security exemption or if it is used in tactical military vehicles that are not covered by a national security exemption but for national security reasons, such as the need to be ready for immediate deployment overseas, need to be fueled on the same fuel as motor

[217] Any JP–5, JP–8, or other distillate product that is not designated by the refiner or importer as motor vehicle diesel fuel, and that does not otherwise meet the definition of motor vehicle diesel fuel, would not be included by the refiner or importer in any computation of motor vehicle diesel fuel volume for baseline or other purposes.

vehicles with a national security exemption. Use of JP–5 and JP–8 fuel not meeting the highway diesel fuel standards in a motor vehicle other than the tactical military vehicles described above is prohibited under today's rule.

Due to national security considerations, EPA's existing regulations allow the military to request and receive national security exemptions (NSE) for their motor vehicles from emissions regulations if the operational requirements for such vehicles warrant such an exemption. These provisions have worked successfully in the past to enable us to meet both our national air quality and security goals simultaneously. Today's rule does not change these provisions.

In discussions with the Department of Defense (DOD), DOD stated that certain tactical military vehicles must be ready to be shipped overseas quickly in response to an emergency and must be ready to be fueled on whatever fuel is available under tactical conditions (typically JP–8). To avoid problems experienced in the past when switching between fuel types in tactical vehicles, JP–8 has been selected as the common tactical fuel for use by the military in the U.S. and overseas. Thus, the use of the high sulfur fuel, which is normally supplied overseas under tactical situations, is expected to continue after the implementation of this rule. However, use of the high sulfur fuel in these engines equipped with the aftertreatment technology, necessary to meet the emissions requirements of today's rule could result in engine failure, driveability problems, and permanently destroy the emission control system.

Therefore, it appears that requiring tactical military vehicles that may be used outside of the U.S. to comply with the emissions requirements in today's rule is not compatible with the operational requirements for such vehicles. In their comments on the proposed rule, DOD stated that it would be appropriate for EPA to cover the tactical military vehicles that would otherwise be subject to the emissions regulations in today's rule under a national security exemption. We recognize the national security concerns raised by DOD, and will address this issue using the Agency procedures established for this purpose.[218] These guidelines are contained in EPA's ''Guidelines for National Security Exemptions of Motor Vehicles and Motor Vehicle Engines—Guidelines for Tactical Vehicles/Engines.''

We also recognize that there are tactical military vehicles manufactured before the requirements of today's rule become effective that for national security purposes need to continue to be operated on JP–5 or JP–8 fuel while in the U.S. to facilitate their readiness to be fueled on whatever fuel is available overseas. Consistent with an exemption for certain military vehicles, EPA is also exempting diesel fuel from the sulfur standard in this rule, where the fuel is used in vehicles exempted from the emissions standards in this rule (pursuant to 40 CFR 85.1708) or in tactical motor vehicles that are not covered by a national security exemption but for national security reasons need to be fueled on the same fuel as motor vehicles with a national security exemption. To more clearly identify the tactical motor vehicles to be covered by the diesel fuel exemption the Department of Defense will submit a notification to EPA describing the rationale and supporting data for the request and a description of the covered tactical motor vehicles. The one-time notification should be sent to EPA by December 15, 2003 in order to provide sufficient time for EPA to review the information as well as lead time to the Department of Defense for logistics planning purposes. EPA will then respond to DOD identifying all vehicles that are covered by the fuel exemption. Based on data provided by the Department of Defense to date, EPA believes that providing an exemption for JP–5 and JP–8 fuel used in tactical motor vehicles does not have any significant environmental impact.

G. Liability and Penalty Provisions for Noncompliance

1. General

The liability and penalty provisions of the diesel sulfur rule are similar to the liability and penalty provisions found in the gasoline sulfur rule, RFG rule and other EPA fuels regulations.[219] Regulated parties are subject to prohibitions which are typical in EPA fuels regulations, such as selling or distributing fuel that does not comply with the standard, and causing others to commit prohibited acts. Liability also arises under the diesel rule for prohibited acts specific to the diesel sulfur control program, such as introducing diesel fuel not meeting the 15 ppm sulfur standard into diesel motor vehicles of model year 2007 and later. In addition, parties will be liable for a failure to meet certain requirements, such as the recordkeeping, reporting, or PTD requirements, or causing others to fail to meet such requirements.

Under today's rule, the party in the diesel fuel's distribution system that controls the facility where the violation occurred, and other parties in that fuel's distribution system (such as the refiner, reseller, and distributor), are presumed to be liable for the violation.[220] As in the Tier 2 gasoline sulfur rule (''Tier 2 sulfur rule''), today's diesel sulfur rule explicitly prohibits causing another person to commit a prohibited act or causing non-conforming diesel fuel to be in the distribution system. Non-conforming means: (1) Diesel fuel with sulfur content above 15 ppm incorrectly designated as appropriate for model year 2007 and above motor vehicles or (2) diesel fuel with sulfur content above 500 ppm incorrectly designated as appropriate for any model year motor vehicle. Parties outside the diesel fuel distribution system, such as diesel additive manufacturers and distributors, would also be subject to liability for those diesel rule violations which could have been caused by their conduct.

Affirmative defenses are provided for each party deemed presumptively liable for a violation, and all presumptions of liability are rebuttable. In general, in order to rebut the presumption of liability, parties are required to establish that: (1) The party did not cause the violation; (2) PTD(s) exist which establish that the fuel or diesel additive was in compliance while under the party's control; and (3) the party conducted a quality assurance sampling and testing program. Diesel fuel refiners, diesel fuel additive manufacturers, and blenders of high sulfur additives into diesel fuel, would also be required to provide test results establishing the conformity of the product prior to leaving that party's control.[221] Branded

[218] These guidelines are contained in EPA's ''Guidelines for National Security Exemptions of Motor Vehicles and Motor Vehicle Engines—Guidelines for Tactical Vehicles/Engines''

[219] See section 80.5 (penalties for fuels violations); section 80.23 (liability for lead violations); section 80.28 (liability for volatility violations); section 80.30 (liability for diesel violations); section 80.79 (liability for violation of RFG prohibited acts); section 80.80 (penalties for RFG/CG violations); section 80.395 (liability for gasoline sulfur violations); section 80.405 (penalties for gasoline sulfur regulations).

[220] An additional type of liability, vicarious liability, is also imposed on branded refiners under these fuels programs.

[221] The requirement of conforming test results was not included in the NPRM as an affirmative defense element for the fuel refiner. However, under both the NPRM and today's final rule, refiners need to establish that they didn't cause the violation. As a practical matter, refiners generally establish their lack of causation using such test results. The Agency believes that it is nonetheless important to require these test results as an affirmative defense element for refiners because under today's final rule, refiners are given the

refiners have additional affirmative defense elements to establish. The defenses under the diesel sulfur rule are similar to those available to parties for violations of the RFG, volatility, and the Tier 2 sulfur regulations. Today's final rule also clarifies that parent corporations are liable for violations of subsidiaries, in a manner consistent with the Tier 2 sulfur rule. Finally, the final diesel sulfur rule mirrors the Tier 2 sulfur rule by clarifying that each partner to a joint venture will be jointly and severally liable for the violations at the joint venture facility or by the joint venture operation.

As is the case with the other EPA fuels regulations, today's final diesel sulfur rule applies the provisions of section 211(d)(1) of the Clean Air Act (Act) for the collection of penalties. These penalty provisions subject any person that violates any requirement or prohibition of the diesel sulfur rule to a civil penalty of up to $27,500 for every day of each such violation and the amount of economic benefit or savings resulting from the violation. A violation of a diesel sulfur cap standard constitutes a separate day of violation for each day the diesel fuel giving rise to the violation remains in the fuel's distribution system. Under the regulation, the length of time the diesel fuel in question remains in the distribution system is deemed to be twenty-five days unless there is evidence that the fuel remained in its distribution system a lesser or greater amount of time—the same time presumption that is incorporated in the RFG and Tier 2 sulfur rules. The penalty provisions are similar to the penalty provisions for violations of the RFG and the Tier 2 sulfur regulations.

EPA has included in today's rule two prohibitions for ''causing'' violations: (1) Causing another to commit a violation; and (2) causing non-complying diesel fuel to be in the distribution system. These causation prohibitions are like similar prohibitions included in the Tier 2 gasoline sulfur regulations, and, as discussed in the preamble to that rule, EPA believes they are consistent with EPA's implementation of prior motor vehicle fuel regulations. See the liability discussion in the preamble to the Tier 2 final rule, at 65 FR 6812 et seq.

The prohibition against causing another to commit a violation would apply where one party's violation is caused by the actions of another party. For example, EPA may conduct an inspection of a terminal and discover that the terminal is offering for sale highway diesel fuel designated as complying with the 15 ppm sulfur standard, while it, in fact, had an actual sulfur content greater than the standard.[222] In this scenario, parties in the fuel's distribution system, as well as parties in the distribution system of any diesel additive that had been blended into the fuel, would be presumed liable for causing the terminal to be in violation. Each party, of course, would have the right to present an affirmative defense to rebut this presumption.

The prohibition against causing non-complying diesel fuel to be in the distribution system would apply, for example, if a refiner transfers non-complying diesel fuel to a pipeline. This prohibition could encompass situations where evidence shows high sulfur diesel fuel was transferred from an upstream party in the distribution system, but EPA may not have test results to establish that parties downstream also committed violations with this fuel.

The Agency intends to enforce the liability scheme of the diesel sulfur rule in the same manner that we have enforced the similar liability schemes in our prior fuels regulations. As in other fuels programs, we will attempt to identify the party most responsible for causing the violation in determining that party that should primarily be liable for penalties for the violation.

2. What Is the Liability That Additive Manufacturers and Distributors, and Parties That Blend Additives Into Diesel Fuel, Are Subject To?

a. General

In the NPRM, the Agency did not propose that additive manufacturers or distributors would be presumed liable for any violations of the diesel regulation. Only parties that were in the diesel fuel distribution system were to be presumed liable for diesel fuel violations. Parties in the additive distribution system would only be subject to liability for fuels violations where the Agency established that they caused others (such as fuel distributors or retailers) to be in violation. This approach was followed because the NPRM prohibited the downstream blending into highway diesel fuel of any additive whose sulfur content exceeded the 15 ppm standard. This limitation reduced the potential that the additive could be the cause of sulfur non-compliance in fuel within the diesel distribution system.

Various additive manufacturers provided comments regarding the need for certain diesel fuel additives that may exceed the 15 ppm sulfur standard. Today's final rule, therefore, permits the blending of diesel additives with sulfur content in excess of 15 ppm into 15 ppm highway diesel fuel under limited circumstances, in response to those comments. As more fully discussed in section VII(C)(5) of this preamble, today's rule permits downstream parties to blend into 15 ppm highway diesel fuel additives having a sulfur content exceeding 15 ppm, provided that: (1) The blending of the additive does not cause the diesel fuel's sulfur content to exceed the 15 ppm sulfur standard; (2) the additive is added in an amount no greater than one volume percent of the blended product; and (3) the downstream party obtained from its additive supplier a product transfer document (''PTD'') with the additive's sulfur content and the recommended treatment rate, and that it complied with such treatment rate, as appropriate.

Since the final rule permits the limited use in highway diesel fuel of additives with high sulfur content, the Agency believes it is now more likely that a diesel fuel sulfur violation could be caused by the use of high sulfur additives. This could result from the additive manufacturer's misrepresentation or inaccurate statement of the additive's sulfur content or recommended treat rate on the additive's PTD, or an additive distributor's contamination of low sulfur additives with high sulfur additives during transportation. The increased probability that parties in the additive distribution system could cause a violation of the sulfur standard warrants the imposition by the Agency of increased liability for such parties under the final rule. As one example of this, the final rule explicitly makes parties in the additive distribution system liable for the sale of nonconforming diesel fuel additives, even if such additives have not yet been blended into diesel fuel. In addition, the

ability to produce high sulfur highway diesel fuel as well as low sulfur product. This makes the possibility of refiner causation of violations much more likely, and the production of conforming test results—the one most convincing piece of evidence which would establish the refiner's lack of causation—much more essential. Further, conducting such testing should not be a significant burden for refiners to comply with. Refiners typically already test their batches to assure component quality for commercial reasons, and refiners are usually the party in the distribution system with the most resources—both financial and analytical—to conduct quality testing. In any case, refiners may choose not to conduct this testing, since it is merely an affirmative defense element, and the tests would only become relevant once a violation is discovered.

[222] The violation would occur if EPA's test result showed a sulfur content of greater than 17 ppm, which takes into account the two ppm adjustment factor for testing reproducibility for downstream parties.

final rule imposes presumptive liability on parties in the additive distribution system if diesel fuel into which the additive has been blended is determined to have a sulfur level in excess of its permitted concentration. This presumptive liability differs depending on whether the blended additive was designated as meeting the 15 ppm sulfur standard (a ''15 ppm additive'') or designated as a greater than 15 ppm sulfur additive (a ''high sulfur additive''), as discussed below.

b. Liability When the Additive Is Designated as Complying With the 15 ppm Sulfur Standard

With the sole exception of diesel additives blended into highway diesel fuel at a concentration no greater than one percent by volume of the blended fuel, any additive blended into diesel fuel downstream of the refinery must have a sulfur content no greater than 15 ppm, and must be accompanied by PTD(s) accurately identifying them as complying with the 15 ppm sulfur standard.

All parties in the fuel and additive distribution systems are subject to presumptive liability if the blended fuel exceeds the sulfur standard (with the two ppm downstream adjustment applied when EPA tests the fuel subject to the 15 ppm sulfur standard). Low sulfur additives present a less significant threat to diesel fuel sulfur compliance than would occur with the use of additives designated as possibly exceeding 15 ppm sulfur. Thus, parties in the additive distribution system of the low sulfur additive will be permitted to rebut the presumption of liability by showing the following: (1) Additive distributors will only be required to produce PTDs asserting that the additive complies with the 15 ppm sulfur standard (2) additive manufacturers will also be required to produce PTDs complying in an accurate manner with the regulatory requirements, as well as producing test results (or retained samples on which tests could be run) establishing the additive's compliance with the 15 ppm sulfur standard prior to leaving the manufacturer's control. Once their presumptive liability would be refuted by producing such documentation in a convincing manner, these additive system parties would only be held responsible for the diesel fuel non-conformity in situations in which EPA can establish that the party actually caused the violation.

Under today's final rule, parties in the diesel fuel distribution system will have the typical presumptive liability defenses as proposed. For parties blending an additive into their diesel fuel, the requirement of producing PTDs showing that the product complied with the regulatory standards will necessarily include PTDs for the additive that was used, affirming the additive's compliance as well as the fuel's.

c. Liability When the Additive Is Designated as Having a Possible Sulfur Content Greater Than 15 ppm

Under today's rule, if an additive manufacturer produces an additive for use in 15 ppm highway diesel fuel at a concentration no greater than one volume percent of the blended fuel, then the additive is permitted to have a maximum sulfur content above 15 ppm. However, if highway diesel fuel containing that additive is found by EPA to have high sulfur content, then all the parties in both the additive's and the fuel's distribution chain will be presumed liable for causing the diesel fuel violation. Since this type of high sulfur additive presents a much greater probability of causing diesel fuel non-compliance, parties in the additive's distribution system will have to satisfy an additional element to establish an affirmative defense. In addition to the elements of an affirmative defense described above, parties in the distribution system for such a high sulfur additive must also establish that they did not cause the violation, an element of an affirmative defense that is typically required in EPA fuel programs to rebut presumptive liability.

Parties in the diesel fuel's distribution system will essentially have to establish the same affirmative elements as proposed, with one addition. Blenders of high sulfur additives into 15 ppm sulfur diesel fuel, by the act of blending such an additive into that fuel, subject themselves to the need for establishing a more rigorous quality control program than would exist without the addition of such a high sulfur addition. The Agency believes that parties blending high sulfur additives into their 15 ppm sulfur diesel fuel should be required to produce test results establishing that the blended fuel was in compliance with the 15 ppm sulfur standards after being blended with the high sulfur additive. This additional defense element is required as an added safeguard to ensure diesel fuel compliance, since the blender has voluntarily chosen to use an additive which increases the risk of diesel fuel non-compliance.

H. How Will Compliance With the Sulfur Standards Be Determined?

In the NPRM, EPA proposed that compliance with the diesel sulfur standards would be determined based on the sulfur level of the diesel fuel, as measured using the regulatory testing methodology. We further proposed that any evidence from any source or location could be used to establish the diesel fuel sulfur level, provided that such evidence is relevant to whether the level would have been in compliance if the regulatory sampling and testing methodology had been correctly performed. In today's action, consistent with the approach taken under the Tier 2 sulfur rule, EPA is adopting the proposed regulatory provisions.

The final regulations provide that the primary determinant of compliance with the standards will be the specified regulatory test method.[223] Additionally, other information may be used under the rule, including test results using non-designated test methods, if the evidence is relevant to determining whether the sulfur level would meet applicable standards had compliance been determined using the specified test methodology. Moreover, since evidence other than regulatory test results must be relevant to compliance using the regulation test method, EPA believes that the rule enables parties to rely with confidence on the proper use of the regulatory method.

For example, the Agency might not have sulfur results derived from the regulatory test method for diesel fuel sold by a terminal, yet the terminal's own test results, based on testing using methods other than those specified and approved in the regulations, could reliably show an exceedence of the sulfur standard. Under today's rule, evidence from the non-regulatory test method could be used to establish the diesel fuel's sulfur level that would have resulted if the regulatory test method had been conducted. This type of evidence is available for use by either the EPA or the regulated party, and could be used to show either compliance or noncompliance. Similarly, absent the existence of sulfur test results using the regulation method, commercial documents asserting the sulfur level of diesel fuel or additive could be used as some evidence of that sulfur level if the product would have been tested using the regulatory method.[224]

[223] Under today's final rule, several specified alternative test methods are also permitted, provided they have been properly correlated with the regulatory method.

[224] The ability to use such evidence is in addition to the presumption established under the final rule, that when a mandated product transfer document asserts that diesel fuel complies with the 500 ppm sulfur standard, the fuel accompanied by that transfer document will be presumed to comply with the 500 standard and not to comply with the 15

The Agency believes that the same statutory authority for EPA to adopt the Tier 2 sulfur rule's evidentiary provisions (Clean Air Act section 211(c)), provides appropriate authority for our adoption of the evidentiary provisions of today's diesel rule. For a fuller explanation of this statutory authority, see Section VI(I) of the Tier 2 final rule preamble, 65 FR 6815, February 10, 2000.

VIII. Standards and Fuel For Nonroad Diesel Engines

Although this program covers only highway diesel engines and highway diesel fuel, our potential plans for nonroad diesel engines, and especially the sulfur content of nonroad diesel, fuel are clearly related. For example, depending on whether and how nonroad diesel fuel is regulated, factors including the costs, leadtime, environmental impacts, and impacts on competitive relationships in the marketplace associated with this program could be affected. We would need to address these factors in any future regulatory action on nonroad diesel fuel.

Because of these factors, various stakeholders inquired during the public comment period about the potential requirements that could apply to nonroad diesel fuel. Several states, environmental organizations, and other commenters urged us to take action on nonroad because of the nonroad contribution to air quality problems. The remainder of this section summarizes the background behind this issue and our current thinking about the future regulation of nonroad diesel engines and fuel.

After establishing an initial set of emission standards for nonroad diesel engines in 1994, we proposed in 1997, and finalized in 1998, a comprehensive program of emission standards for most diesel engines designed for nonroad use.[225] This program established NMHC + NO_X and PM standards that are phasing in over the 1999–2006 time frame, with engines of different horsepower ranges coming into the program in different years. At the same time, we set long-term (''Tier 3'') NMHC + NO_X standards, but not PM standards, for medium and high horsepower engines, to begin in 2006. This rule also included a plan to reassess the Tier 3 NMHC + NO_X standards and to establish a PM test cycle and associated standards in the 2001 time frame. In addition, the 1998 rule anticipated an EPA reassessment of the NMHC + NO_X standards for the smaller engines (less than 50 horsepower), which are to be phased in beginning in 2004 (referred to as nonroad ''Tier 2'' standards).

We did not include regulations on nonroad diesel fuel in the first diesel fuel sulfur control program which was established in 1993 for highway diesel fuel. We estimate that the average sulfur content for nonroad diesel fuel is currently around 3000 ppm,[226] as compared to the cap for highway diesel fuel of 500 ppm.[227]

We believe that any specific new requirements for nonroad diesel fuel would need to be carefully considered in the context of a proposal for further nonroad diesel engine emission standards. For the nonroad program, we expect to use the same systems-based approach as we used for the Tier 2/ Gasoline Sulfur program and today's highway diesel fuel and heavy-duty engine standards program. This is because of the close interrelationship between fuels and engines—the best emission control solutions may not come through either fuel changes or engine improvements alone, but perhaps through an appropriate balance between the two. This is especially significant given that engine manufacturers and diesel fuel refiners would need to address potential challenges such as capital cost, leadtime, and engineering and construction resources, of simultaneously meeting the highway standards under this program with the nonroad standards that may be implemented. Thus we need to address issues in both the fuel and engine arenas together.

The many issues connected with any rulemaking for nonroad engines and fuel warrant serious attention, and we believe it would be premature today for us to attempt to raise potential resolutions to them. We plan to initiate action in the future to formulate thoughtful proposals covering both nonroad diesel fuel and engines.

IX. Public Participation

A wide variety of interested parties participated in the rulemaking process that culminates with this final rule. The formal comment period and five public hearings associated with the NPRM provided additional opportunities for public input. EPA also met with a variety of stakeholders, including environmental and public health organizations, oil company representatives, auto company representatives, emission control equipment manufacturers, and states at various points in the process.

We prepared a detailed Response to Comments document that describes the comments received on the NPRM and presents our response to each of these comments. The Response to Comments document is available in the docket for this rule and on the Office of Transportation and Air Quality internet home page. Comments and our responses are also included throughout this preamble for several key issues.

X. Administrative Requirements

A. Administrative Designation and Regulatory Analysis

Under Executive Order 12866 (58 FR 51735, October 4, 1993), the Agency is required to determine whether this regulatory action will be ''significant'' and therefore subject to review by the Office of Management and Budget (OMB) and the requirements of the Executive Order. The order defines a ''significant regulatory action'' as any regulatory action that is likely to result in a rule that may:

- Have an annual effect on the economy of $100 million or more or adversely affect in a material way the economy, a sector of the economy, productivity, competition, jobs, the environment, public health or safety, or State, local, or tribal governments or communities;
- Create a serious inconsistency or otherwise interfere with an action taken or planned by another agency;
- Materially alter the budgetary impact of entitlements, grants, user fees, or loan programs or the rights and obligations of recipients thereof; or,
- Raise novel legal or policy issues arising out of legal mandates, the President's priorities, or the principles set forth in the Executive Order.

Pursuant to the terms of Executive Order 12866, EPA has determined that this rule is a ''significant regulatory action'' because the engine standards, diesel fuel sulfur standards, and other regulatory provisions will have an annual effect on the economy in excess of $100 million. Accordingly, we have prepared a Final Regulatory Impact Analysis (RIA) which is available in the docket for this rulemaking and at the internet address listed under **ADDRESSES** above. This action was submitted to the Office of Management and Budget (OMB) for review as required by Executive Order 12866. Written comments from OMB on today's action

ppm standard, unless the party can establish otherwise.

[225] See the final rule, 63 FR 56968, October 23, 1998 for more about the history of these regulations.

[226] National Institute for Petroleum and Energy Research (NIPER) report, Diesel Fuel Oils, 1996.

[227] Information from recent national fuel surveys by NIPER and the Alliance of Automobile Manufacturers.

and responses from EPA to OMB comments are in the public docket for this rulemaking.

B. Regulatory Flexibility Analysis

EPA has decided to prepare a Final Regulatory Flexibility Analysis in connection with this final rule. For purposes of assessing the impact of today's rule on small entities, small entities are defined as described under section X.B.3 below.

In accordance with section 603 of the RFA, EPA prepared an initial regulatory flexibility analysis (IRFA) for the proposed rule and convened a Small Business Advocacy Review Panel to obtain advice and recommendations of representatives of the regulated small entities in accordance with section 609(b) of the RFA (see 65 FR 35541, June 2, 2000). A detailed discussion of the Panel's advice and recommendations is found in the Panel Report contained in the docket for this rulemaking. A summary of the Panel's recommendations is presented at 65 FR 35541.

We have also prepared a final regulatory flexibility analysis (FRFA) for today's final rule. The FRFA addresses the issues raised by public comments on the IRFA, which was part of the proposal of this rule. The FRFA is available for review in the docket and is summarized below.[228] The key elements of the FRFA include:

—The need for, and objectives of, the rule;
—The significant issues raised by public comments on the Initial RFA, a summary of the Agency's assessment of those issues, and a statement of any changes made to the proposed rule as a result of those comments;
—The types and number of small entities to which the rule will apply;
—The reporting, recordkeeping, and other compliance requirements of the rule, including the classes of small entities that will be affected and the type of professional skills necessary to prepare the report or record;
—The steps taken to minimize the significant impact on small entities consistent with the stated objectives of the applicable statute, including a statement of the factual, policy and legal reasons why the Agency selected the alternatives we did, and why other significant alternatives to the rule which affect the impact on small entities were rejected.

We summarize the key elements of the FRFA below. A fuller discussion of each of these elements can be found in the FRFA (Chapter VIII of the RIA).

1. Need for and Objectives of the Rule

Section I of this preamble provides a summary of the need for and objectives of this rule. As discussed in detail in Section II of this preamble, emissions from heavy-duty vehicles contribute greatly to a number of serious air pollution problems, and would have continued to do so into the future absent further controls to reduce these emissions. Although the air quality problems caused by diesel heavy-duty vehicles are challenging, we believe they can be resolved through the application of high-efficiency emissions control technologies. Based on the Clean Air Act requirements discussed in Section I.B.3, we are setting stringent new emission standards that will result in the use of these diesel exhaust emission control devices (see Section III). We are also finalizing changes to diesel fuel sulfur standards in order to enable these high-efficiency technologies (Section IV). In consideration of the impacts that sulfur has on the efficiency, reliability, and fuel economy impact of diesel engine exhaust emission control devices, we believe that controlling the sulfur content of highway diesel fuel to the 15 ppm level is necessary, feasible and cost effective. The standards will result in substantial benefits to public health and welfare and the environment through significant reductions in emissions of nitrogen oxides, particulate matter, nonmethane hydrocarbons, carbon monoxide, sulfur oxides, and air toxics.

2. Summary of Significant Public Comments on the IRFA

EPA received many comments from small refiners and others pertaining to the options for hardship relief described in the NPRM. In general, many small refiners commented on the financial difficulty their refinery would face in complying with the proposed diesel sulfur program, and encouraged EPA to provide hardship relief. Many small refiners acknowledged that there was not one single hardship relief option to best suit the needs of all small refiners, and thus supported a menu of options. Section IV.C of the preamble discusses the three hardship relief options available to small refiners under today's program. These three options are based on concepts which were considered by the SBAR Panel and on which we requested and received comment in the proposal. A summary of the comments pertaining to regulatory alternatives for small refiners, and our response to them, is contained in the Response to Comments document contained in the docket.

3. Types and Number of Small Entities

Today's program, which establishes new emission standards for heavy-duty engines and new standards for the sulfur content of highway diesel fuel, will directly affect manufacturers of heavy-duty engines and petroleum refiners that produce highway diesel fuel, respectively. In addition, but to a lesser extent, the program will directly affect diesel distributors and marketers.

We have not identified any manufacturers of heavy-duty engines that meet SBA's definition of a small business. However, we have identified several petroleum refiners that produce highway diesel fuel and meet the SBA's definitions for a small business for the industry category. According to the SBA's definition of a small business for a petroleum refining company (Standard Industrial Classification (SIC) 2911), which we have used for purposes of assessing the impact of today's rule on small entities, a company must have 1500 or fewer employees to qualify as an SBA small business. Of the approximately 158 refineries in the U.S. today, we estimate that approximately 24 refiners (owning 27 refineries) would meet the SBA definition and produce highway diesel fuel. We estimate that these 24 refiners produce approximately five percent of highway diesel fuel nationwide.

EPA also has identified several thousand businesses in the diesel distribution and marketing industry that meet SBA's definitions of small business. More information about these industries is contained in the Final RFA. The low sulfur diesel fuel rule contains certain downstream compliance and enforcement provisions, for all parties in the diesel fuel distribution system downstream of the refinery gate, to prevent (1) contamination of highway diesel fuels with fuels containing higher levels of sulfur and (2) misfueling of motor vehicles with high sulfur fuels.

Under this rule, distributors and retailers may choose to handle 500 ppm diesel fuel, 15 ppm diesel fuel, or both (as permitted under the temporary compliance option and small refiner hardship provisions described in the preamble). However, distributors and marketers will have to segregate low sulfur diesel fuel from other distillates just as they do today with 500 ppm diesel fuel. Retailers and wholesale purchaser-consumers will be responsible for ensuring that only low sulfur diesel fuel is sold for use in model year 2007 and later heavy-duty

[228] The Final RFA is contained in Chapter VIII of the RIA.

vehicles. Under the temporary compliance option for refiners and small refiner hardship provisions (described in Section IV), where two grades of highway diesel fuel are allowed for the initial years of the program, some distributors and marketers may voluntarily decide (presumably based on economics) to add tankage or make additional modifications to accommodate two grades of highway diesel fuel. We have taken such costs into account in our diesel fuel cost analysis (described in more detail in Chapter V of the RIA).

The low sulfur diesel fuel rule also includes a product downgrading restriction that is designed to discourage the intentional downgrading of 15 ppm diesel fuel to 500 ppm diesel fuel in the distribution system during the initial years of the program when the optional compliance provision is in effect. This provision and its impacts on affected entities is discussed more in Section VII of this preamble and in the FRFA. This provision does not require any new recordkeeping or reporting requirements beyond those required of the rest of the program.

4. Reporting, Recordkeeping and Other Compliance Requirements

As with all refiners complying with the highway diesel fuel program, small refiners will be subject to registration, pre-compliance reporting, annual compliance reporting, and product transfer document requirements. In addition, the low sulfur diesel fuel program contains several hardship options to assist small refiners in producing low sulfur diesel fuel. Under these options, small refiners may be subject to additional reporting and recordkeeping requirements to help ensure compliance with the options and the integrity of the low sulfur diesel fuel as it moves from the refinery gate to the retail outlet. For example, all refiners producing diesel fuel are required to provide us with basic data on their progress toward compliance in 2003–2005 under the pre-compliance reporting requirements described in Section IV.A. As a part of their pre-compliance reports, small refiners must provide a limited amount of additional information specific to the option they choose. However, we believe the benefits of these hardship options will far outweigh any burdens imposed by their associated recordkeeping and reporting requirements.

The low sulfur diesel fuel program does not impose any new reporting requirements for small diesel marketers or distributors. However, this program does impose new record keeping requirements for such parties, specifically product transfer documents that track transfers of diesel fuel. Such transfer records are currently maintained by most parties for business and/or tax reasons. In addition, the record keeping requirements for downstream parties are fairly consistent with those in place today under other EPA fuel programs, including the current highway diesel fuel program. Therefore, we expect that the new record keeping requirements for downstream parties will not impose a significant burden.

These recordkeeping, reporting and compliance requirements are discussed in more detail in Sections IV and VII of this preamble and in the FRFA.

5. Regulatory Alternatives To Minimize Impact on Small Entities

The Small Business Advocacy Review Panel was convened by EPA on November 12, 1999. The Panel consisted of representatives of the Small Business Administration (SBA), the Office of Management and Budget (OMB) and EPA. During the development of the proposal to this rule, EPA and the Panel were in contact with representatives from the small businesses that will be subject to the provisions in today's rule. In addition to verbal comments from industry noted by the Panel at meetings and teleconferences, written comments were received from each of the affected industry segments or their representatives. The Panel report contains a summary of these comments and the Panel's recommendations on options that could mitigate the adverse impacts on small businesses.

The Panel considered a range of options and regulatory alternatives for providing small businesses with flexibility in complying with new sulfur standards for highway diesel fuel. As part of the process, the Panel requested and received comment on several ideas for flexibility that were suggested by small entity representatives (SERs) and Panel members. The Panel's recommendations are discussed in detail in the Panel Report, contained in the docket. In the NPRM, EPA sought public comment on several ideas that stemmed from the Panel's recommendations, as well as on the Panel's recommendations. Taking into consideration the comments received on these ideas, as well as additional business and technical information gathered about potentially affected small entities, we are finalizing certain of those options today, as discussed in detail in Section IV above.

In addition to our participation in the SBREFA process, we conducted our own outreach, fact-finding, and analysis of the potential impacts of our regulations on small businesses. Some of the small refiners with whom we and the Panel met indicated their belief that their businesses may close due to the substantial costs, capital and other impacts of meeting the 15 ppm diesel fuel standard without either additional time or flexibility with respect to gasoline sulfur compliance. Based on these discussions and analyses, the Panel and we agree that small refiners would likely experience a significant and disproportionate financial hardship in reaching the objectives of our diesel fuel sulfur program. However, the Panel also noted that the burden imposed upon the small refiners by our sulfur requirements varied from refiner to refiner and could not be alleviated with a single provision. We agree with the Panel and are offering qualifying small refiners three options to choose from in moving toward compliance with the low sulfur diesel fuel requirements.

For today's action, we have structured a selection of temporary flexibilities for qualifying small refiners, both domestic and foreign, based on the factors described below. Generally, we structured these provisions to address small refiner hardship while expeditiously achieving air quality benefits and ensuring that the low sulfur diesel fuel coincides with the introduction of 2007 model year diesel vehicles. First, the compliance deadlines in the program, combined with flexibility for small refiners, will quickly achieve the air quality benefits of the program, while helping to ensure that small refiners will have adequate time to raise capital for new or revamped equipment. Second, we believe that allowing time for refinery sulfur-reduction technologies to be proven out by larger refiners before small refiners have to put them in place will likely allow for lower costs of these improvements in desulfurization technology (*e.g.,* better catalyst technology or lower-pressure hydrotreater technology). Third, providing small refiners more time to comply will increase the availability of engineering and construction resources. Since most large and small refiners must install additional processing equipment to meet the sulfur requirements, there will be a tremendous amount of competition for technology services, engineering manpower, and construction management and labor. Finally, because the gasoline and diesel sulfur requirements will occur in approximately the same time frame, small refiners that produce both fuels

will have a greater difficulty than most other refiners in securing the necessary financing. Hence, any effort that increases small refiners' ability to stagger investments for low sulfur gasoline and diesel will facilitate compliance with the two programs. These factors are discussed further in Section IV.C.

Providing these options to assist small refiners experiencing hardship circumstances enables us to go forward with the 15 ppm sulfur standard beginning in 2006. Without this flexibility, the benefits of the 15 ppm standard would possibly not be achieved as quickly. By providing temporary relief to those refiners that need additional time, we are able to adopt a program that expeditiously reduces diesel sulfur levels in feasible manner for the industry as a whole. In addition, we believe the volume of diesel that will be affected by this hardship provision is marginal. We estimate that small refiners contribute approximately five percent of all domestic highway diesel fuel production.

The Final RFA evaluates the financial impacts of today's program on small entities. EPA believes that the regulatory alternatives finalized in this rule will provide substantial relief to qualifying small businesses from the potential adverse economic impacts of complying with today's rule. The three hardship options available to small refiners under today's rule are summarized below, and are discussed in more detail in Section IV.C and the FRFA.

500 ppm Option. A small refiner may continue to produce and sell diesel fuel meeting the current 500 ppm sulfur standard for four additional years, until May 31, 2010, provided that it reasonably ensures the existence of sufficient volumes of 15 ppm fuel in the marketing area(s) that it serves.

Small Refiner Credit Option. A small refiner that chooses to produce 15 ppm fuel prior to June 1, 2010 may generate and sell credits under the broader temporary compliance option. Since a small refiner has no requirement to produce 15 ppm fuel under this option, any fuel it produces at or below 15 ppm sulfur will qualify for generating credits.

Diesel/Gasoline Compliance Date Option. For small refiners that are also subject to the Tier 2/Gasoline sulfur program (40 CFR Part 80), the refiner may choose to extend by three years the duration of its applicable interim gasoline standards, provided that it also produces all its highway diesel fuel at 15 ppm sulfur beginning June 1, 2006.

One alternative for which we sought public comment, but are not finalizing today, is an option of allowing small refiners to produce highway diesel fuel meeting a less stringent sulfur standard (*e.g.,* 50 ppm). Some small refiners, and other refiners, commented that the costs of meeting a 50 ppm sulfur cap would be significantly less than those to meet a 15 ppm cap. However, we are not adopting less stringent sulfur standards for small refiners today, because the new diesel exhaust emissions control devices require diesel fuel with a sulfur content capped at 15 ppm in order to be viable and capable to meeting the 2007 emission standards. The need for 15 ppm sulfur diesel fuel is discussed in detail in Section III. Additional discussion of this issue can be found in the Response to Comments document. Additional information on the factual, policy, and legal reasons for the selection of alternatives considered for small refiners, and on any rejected alternatives, can be found in the FRFA, as well as in appropriate sections of the Preamble, RIA, and RTC.

As required by Section 212 of SBREFA, EPA also is preparing a small entity compliance guide to help small entities comply with this rule. Once available, small businesses will be able to obtain a copy through our web site at http://www.epa.gov/otaq.

C. Paperwork Reduction Act

This action establishes a standard for low sulfur diesel fuel that will become effective in 2006 and that involves the collection of information under the Paperwork Reduction Act, 44 U.S.C. 3501 *et seq.* An Agency may not conduct or sponsor, and a person is not required to respond to a collection of information, unless it displays a currently valid OMB control number. The OMB control numbers for our regulations are listed in 40 CFR Part 9 and 48 CFR Chapter 15.

For 500 ppm diesel fuel standards currently in effect, the existing ICR is ''Regulations of Fuel and Fuel Additives; Fuel Quality Regulations for Highway Diesel Sold in 1993 and Later Calendar Years; Recordkeeping Requirements,'' OMB Control Number 2060–0308, EPA ICR Number 1718.12 (expires July 31, 2001). Copies of this ICR may be obtained from Delores Evans, Office of Policy, Regulatory Information Division, U.S. Environmental Protection Agency (Mail Code 2137), 1200 Pennsylvania Avenue, NW., Washington, DC 20460. Please mark requests, ''Attention: Desk Officer for EPA'' and include the ICR in any correspondence.

The Paperwork Reduction Act stipulates that ICR documents estimate the burden of activities that will be required of regulated parties within a three year time period. Burden means the total time, effort, or financial resources expended by persons to generate, maintain, retain, or disclose or provide information to or for a Federal agency. This includes the time needed to review instructions; develop, acquire, install, and utilize technology and systems for the purposes of collecting, validating, and verifying information, processing and maintaining information, and disclosing and providing information; adjust the existing ways to comply with any previously applicable instructions and requirements; train personnel to be able to respond to a collection of information; search data sources; complete and review the collection of information; and transmit or otherwise disclose the information.

The information collection requirements (ICR) for this rule as it relates to low sulfur (15 ppm) diesel fuel will undergo any required public notice and comment and be submitted for approval to OMB under the Paperwork Reduction Act, 44 U.S.C. 3501 *et seq.* prior to any required information collection.

D. Intergovernmental Relations

1. Unfunded Mandates Reform Act

Title II of the Unfunded Mandates Reform Act of 1995 (UMRA), Public Law 104–4, establishes requirements for federal agencies to assess the effects of their regulatory actions on state, local, and tribal governments, and the private sector. Under Section 202 of the UMRA, EPA generally must prepare a written statement, including a cost-benefit analysis, for proposed and final rules with ''federal mandates'' that may result in expenditures to state, local, and tribal governments, in the aggregate, or to the private sector, of $100 million or more for any single year. Before promulgating a rule, for which a written statement is needed, Section 205 of the UMRA generally requires EPA to identify and consider a reasonable number of regulatory alternatives and adopt the least costly, most cost effective, or least burdensome alternative that achieves the objectives of the rule. The provisions of Section 205 do not apply when they are inconsistent with applicable law. Moreover, Section 205 allows EPA to adopt an alternative that is not the least costly, most cost effective, or least burdensome

alternative if EPA provides an explanation in the final rule of why such an alternative was adopted.

Before we establish any regulatory requirement that may significantly or uniquely affect small governments, including tribal governments, we must develop a small government plan pursuant to Section 203 of the UMRA. Such a plan must provide for notifying potentially affected small governments, and enabling officials of affected small governments to have meaningful and timely input in the development of our regulations with significant federal intergovernmental mandates. The plan must also provide for informing, educating, and advising small governments on compliance with the regulatory requirements.

This rule contains no federal mandates for state, local, or tribal governments as defined by the provisions of Title II of the UMRA. The rule imposes no enforceable duties on any of these governmental entities. Nothing in this rule will significantly or uniquely affect small governments.

EPA has determined that this rule contains federal mandates that may result in expenditures of more than $100 million to the private sector in any single year. EPA considered and evaluated a wide range of regulatory alternatives before arriving at the program finalized today. EPA believes that today's final rule represents the least costly, most cost effective approach to achieve the air quality goals of the rule. The cost-benefit analysis required by the UMRA is discussed in Section V above and in the RIA. See the ''Administrative Designation and Regulatory Analysis'' Section (XI.A.) in today's preamble for further information regarding these analyses.

2. Executive Order 13084: Consultation and Coordination With Indian Tribal Governments

Under Executive Order 13084, EPA may not issue a regulation that is not required by statute, that significantly or uniquely affects the communities of Indian Tribal governments, and that imposes substantial direct compliance costs on those communities, unless the federal government provides the funds necessary to pay the direct compliance costs incurred by the tribal governments, or EPA consults with those governments. If EPA complies by consulting, Executive Order 13084 requires EPA to provide to the OMB, in a separately identified section of the preamble to the rule, a description of the extent of EPA's prior consultation with representatives of affected tribal governments, a summary of the nature of their concerns, and a statement supporting the need to issue the regulation. In addition, Executive Order 13084 requires EPA to develop an effective process permitting elected officials and other representatives of Indian tribal governments ''to provide meaningful and timely input in the development of regulatory policies on matters that significantly or uniquely affect their communities.''

Today's rule does not significantly or uniquely affect the communities of Indian Tribal governments. The engine emissions, diesel fuel, and other related requirements for private businesses in today's rule will have national applicability, and thus will not uniquely affect the communities of Indian Tribal Governments. Further, no circumstances specific to such communities exist that will cause an impact on these communities beyond those discussed in the other sections of this rule. Thus, EPA's conclusions regarding the impacts from the implementation of today's rule discussed in the other sections of this preamble are equally applicable to the communities of Indian Tribal governments. Accordingly, the requirements of Section 3(b) of Executive Order 13084 do not apply to this rule.

E. National Technology Transfer and Advancement Act

Section 12(d) of the National Technology Transfer and Advancement Act of 1995 (NTTAA), Section 12(d) of Public Law 104–113, directs EPA to use voluntary consensus standards in its regulatory activities unless it would be inconsistent with applicable law or otherwise impractical. Voluntary consensus standards are technical standards (e.g., materials specifications, test methods, sampling procedures, and business practices) developed or adopted by voluntary consensus standards bodies. The NTTAA directs EPA to provide Congress, through OMB, explanations when the Agency decides not to use available and applicable voluntary consensus standards.

This rule references technical standards adopted by the Agency through previous rulemakings. No new technical standards are established in today's rule. The standards referenced in today's rule involve the measurement of diesel fuel parameters and engine emissions. The measurement standards for diesel fuel parameters referenced in today's rule are all voluntary consensus standards. The engine emissions measurement standards referenced in today's rule are government-unique standards that were developed by the Agency through previous rulemakings. These standards have served the Agency's emissions control goals well since their implementation and have been well accepted by industry. EPA is not aware of any voluntary consensus standards for the measurement of engine emissions. Therefore, the Agency is using the existing EPA-developed standards found in 40 CFR Part 86 for the measurement of engine emissions.

F. Executive Order 13045: Children's Health Protection

Executive Order 13045, ''Protection of Children from Environmental Health Risks and Safety Risks'' (62 FR 19885, April 23, 1997) applies to any rule that (1) is determined to be ''economically significant'' as defined under Executive Order 12866, and (2) concerns an environmental health or safety risk that EPA has reason to believe may have a disproportionate effect on children. If the regulatory action meets both criteria, Section 5–501 of the Order directs the Agency to evaluate the environmental health or safety effects of the planned rule on children, and explain why the planned regulation is preferable to other potentially effective and reasonably feasible alternatives considered by the Agency.

This rule is subject to the Executive Order because it is an economically significant regulatory action as defined by Executive Order 12866 and it concerns in part an environmental health or safety risk that EPA has reason to believe may have a disproportionate effect on children.

This rulemaking will achieve significant reductions of various emissions from heavy-duty engines, including NO_X, PM, VOCs and air toxics. These pollutants raise concerns regarding environmental health or safety risks that EPA has reason to believe may have a disproportionate effect on children, such as impacts from ozone, PM and certain toxic air pollutants. See Section II and the RIA for a further discussion of these issues.

The effects of ozone and PM on children's health were addressed in detail in EPA's rulemaking to establish the NAAQS for these pollutants, and EPA is not revisiting those issues here. The emission reductions from the strategies in this rulemaking will further reduce air toxics and the related adverse impacts on children's health. In a separate rulemaking under Section 202(l) of the Act, EPA addresses the emissions of hazardous air pollutants from motor vehicles and fuels, and the appropriate level of control of HAPs from these sources. It is important to note that the air toxics reductions that the Agency expects to achieve based on

today's action are an integral part of the Agency's comprehensive strategy to address air toxics from motor vehicles under section 202(l).

In this rule, EPA has evaluated several regulatory strategies for reductions in emissions from heavy-duty engines. (See Section III of this rule as well as the RIA.) For the reasons described there, EPA believes that the strategies are preferable under the CAA to other potentially effective and reasonably feasible alternatives considered by the Agency, for purposes of reducing emissions from these sources as a way of helping areas achieve and maintain the NAAQS for ozone and PM. Moreover, EPA believes that it has selected for this rule the most stringent and effective control reasonably feasible at this time, in light of the technology and cost requirements of the Act.

G. Executive Order 13132: Federalism

Executive Order 13132, entitled ''Federalism'' (64 FR 43255, August 10, 1999), requires EPA to develop an accountable process to ensure ''meaningful and timely input by State and local officials in the development of regulatory policies that have federalism implications.'' ''Policies that have federalism implications'' is defined in the Executive Order to include regulations that have ''substantial direct effects on the States, on the relationship between the national government and the States, or on the distribution of power and responsibilities among the various levels of government.''

Under Section 6 of Executive Order 13132, EPA may not issue a regulation that has federalism implications, that imposes substantial direct compliance costs, and that is not required by statute, unless the Federal government provides the funds necessary to pay the direct compliance costs incurred by State and local governments, or EPA consults with State and local officials early in the process of developing the regulation. EPA also may not issue a regulation that has federalism implications and that preempts State law, unless the Agency consults with State and local officials early in the process of developing the regulation.

Section 4 of the Executive Order contains additional requirements for rules that preempt State or local law, even if those rules do not have federalism implications (i.e., the rules will not have substantial direct effects on the States, on the relationship between the national government and the states, or on the distribution of power and responsibilities among the various levels of government). Those requirements include providing all affected State and local officials notice and an opportunity for appropriate participation in the development of the regulation. If the preemption is not based on express or implied statutory authority, EPA also must consult, to the extent practicable, with appropriate State and local officials regarding the conflict between State law and Federally protected interests within the agency's area of regulatory responsibility.

This rule does not have federalism implications. It will not have substantial direct effects on the States, on the relationship between the national government and the States, or on the distribution of power and responsibilities among the various levels of government, as specified in Executive Order 13132. Section 211(d)(4)(A) of the CAA prohibits states from prescribing or attempting to enforce controls or prohibitions respecting any fuel characteristic or component if EPA has prescribed a control or prohibition applicable to such fuel characteristic or component under Section 211(c)(1) of the Act. This rule merely modifies existing EPA diesel fuel and heavy-duty vehicle standards and therefore will merely continue an existing preemption of State and local law as discussed in Section VI. Thus, Executive Order 13132 does not apply to this rule.

Although Section 6 of Executive Order 13132 does not apply to this rule, EPA did consult with representatives of various State and local governments in developing this rule. In particular EPA consulted with the State of Alaska in the design of the program as it applies to them, as discussed in Section IV. EPA also talked to representatives from the State of California as well as representatives from STAPPA/ALAPCO, which represents state and local air pollution officials.

H. Congressional Review Act

The Congressional Review Act, 5 U.S.C. 801 *et seq.,* as added by the Small Business Regulatory Enforcement Fairness Act of 1996, generally provides that before a rule may take effect, the agency promulgating the rule must submit a rule report, which includes a copy of the rule, to each House of the Congress and to the Comptroller General of the United States. EPA will submit a report containing this rule and other required information to the U.S. Senate, the U.S. House of Representatives, and the Comptroller General of the United States prior to publication of the rule in the **Federal Register**. This rule is a ''major rule'' as defined by 5 U.S.C. 804(2).

XI. Statutory Provisions and Legal Authority

Statutory authority for the engine controls finalized in this document can be found in Sections 202, 203, 206, 207, 208, and 301 of the CAA, as amended, 42 U.S.C. 7521, 7522, 7525, 7541, 7542, and 7601.

Statutory authority for the fuel controls finalized in this notice comes from Section 211(c) and 211(i) of the CAA, which allows EPA to regulate fuels that either contribute to air pollution which endangers public health or welfare or which impair emission control equipment which is in general use or has been in general use. Additional support for the procedural and enforcement-related aspects of the fuel's controls in today's rule, including the record keeping requirements, comes from Sections 114(a) and 301(a) of the CAA.

List of Subjects

40 CFR Part 69

Environmental protection, Air pollution control.

40 CFR Part 80

Environmental protection, Fuel additives, Gasoline, Imports, Incorporation by reference, Labeling, Motor vehicle pollution, Penalties, Reporting and recordkeeping requirements.

40 CFR Part 86

Environmental protection, Administrative practice and procedure, Confidential business information, Incorporation by reference, Labeling, Motor vehicle pollution, Reporting and recordkeeping requirements.

Dated: December 21, 2000.

Carol M. Browner,

Administrator.

For the reasons set forth in the preamble, we amend parts 69, 80 and 86 of title 40 of the Code of Federal Regulations to read as follows:

PART 69—SPECIAL EXEMPTIONS FROM THE REQUIREMENTS OF THE CLEAN AIR ACT

1. The authority citation for part 69 is revised to read as follows:

Authority: 42 U.S.C. 7545(c), (g) and (i), and 7625–1.

Subpart E—Alaska

2. Section 69.51 of subpart E is revised to read as follows:

§ 69.51 Motor vehicle diesel fuel.

(a) Diesel fuel that is designated for use only in Alaska and is used only in

Alaska, is exempt from the sulfur standard of 40 CFR 80.29(a)(1) and the dye provisions of 40 CFR 80.29(a)(3) and 40 CFR 80.29(b) until the implementation dates of 40 CFR 80.500, provided that:

(1) The fuel is segregated from non-exempt diesel fuel from the point of such designation; and

(2) On each occasion that any person transfers custody or title to the fuel, except when it is dispensed at a retail outlet or wholesale purchaser-consumer facility, the transferor must provide to the transferee a product transfer document stating:

This diesel fuel is for use only in Alaska. It is exempt from the federal low sulfur standards applicable to highway diesel fuel and red dye requirements applicable to non-highway diesel fuel only if it is used in Alaska.

(b) Beginning on the implementation dates in 40 CFR 80.500, diesel fuel that is designated for use in Alaska or is used in Alaska, is subject to the applicable provisions of 40 CFR Part 80, Subpart I, except as provided under paragraph (c) of this section. The Governor of Alaska may submit for EPA approval, by April 1, 2002, a plan for implementing the sulfur standard in Alaska as an alternative to the temporary compliance option provided under §§ 80.530–80.532. If EPA approves an alternative plan, the provisions as approved by EPA under that plan shall apply to the diesel fuel subject to this paragraph (b).

(c) If such diesel fuel is designated as fuel that does not comply with the standards and requirements for motor vehicle diesel fuel under 40 CFR Part 80, Subpart I, it is exempt from the dye presumption of 40 CFR 80.520(b)(2) provided that:

(1) The fuel is segregated from all motor vehicle diesel fuel.

(2) On each occasion that any person transfers custody or title to the fuel, except when it is dispensed at a retail outlet or wholesale purchaser-consumer facility, the transferor must provide to the transferee a product transfer document complying with the requirements of 40 CFR 80.590(a) through (d) and (g), and stating:

This diesel fuel is for use only in Alaska and is not for use in highway vehicles. It is exempt from the red dye requirement applicable to non-highway diesel fuel only if it is used in Alaska.

(3) Any pump dispensing the fuel must comply with the labeling requirements in 40 CFR 80.570(c).

PART 80—REGULATION OF FUELS AND FUEL ADDITIVES

3. The authority citation for part 80 is revised to read as follows:

Authority: 42 U.S.C. 7414, 7545, and 7601(a).

4. Section 80.2 is amended by revising paragraphs (x) and (y) and adding paragraphs (bb), (nn), and (xx) to read as follows:

§ 80.2 Definitions.

* * * * *

(x) *Diesel fuel* means any fuel sold in any state or Territory of the United States and suitable for use in diesel motor vehicles, diesel motor vehicle engines or diesel nonroad engines, and which is commonly or commercially known or sold as diesel fuel.

(y) *Motor vehicle diesel fuel* means any diesel fuel, or any distillate product, that is used, intended for use, or made available for use, as a fuel in diesel motor vehicles or diesel motor vehicle engines.

* * * * *

(bb) *Sulfur percentage* is the percentage of sulfur in diesel fuel by weight, as determined using the applicable sampling and testing methodologies set forth in § 80.580.

* * * * *

(nn) *Batch of motor vehicle diesel fuel* means a quantity of diesel fuel which is homogeneous with regard to those properties that are specified for motor vehicle diesel fuel under subpart I of this part.

* * * * *

(xx) *Motor vehicle diesel fuel additive* means any substance not composed solely of carbon and/or hydrogen, or of diesel blendstocks, that is added, intended for adding, used, or offered for use in motor vehicle diesel fuel subsequent to the production of diesel fuel by processing crude oil from refinery processing units, or in diesel motor vehicle fuel systems.

* * * * *

5. Section 80.29 is amended by revising paragraphs (a) and (b), to read as follows:

§ 80.29 Controls and prohibitions on diesel fuel quality.

(a) *Prohibited activities.* Beginning October 1, 1993 and continuing until the implementation dates for subpart I of part 80 as specified in § 80.500, except as provided in 40 CFR 69.51, no person, including but not limited to, refiners, importers, distributors, resellers, carriers, retailers or wholesale purchaser-consumers, shall manufacture, introduce into commerce, sell, offer for sale, supply, store, dispense, offer for supply or transport any diesel fuel for use in motor vehicles, unless the diesel fuel:

(1) Has a sulfur percentage, by weight, no greater than 0.05 percent;

(2)(i) Has a cetane index of at least 40; or

(ii) Has a maximum aromatic content of 35 volume percent; and

(3) Is free of visible evidence of the dye solvent red 164; unless it is used in a manner that is tax-exempt as defined under section 4082 of the Internal Revenue Code (26 U.S.C. 4082).

(b) *Determination of compliance.* (1) Any diesel fuel which does not show visible evidence of being dyed with dye solvent red 164 (which has a characteristic red color in diesel fuel) shall be considered to be available for use in diesel motor vehicles and motor vehicle engines, and shall be subject to the prohibitions of paragraph (a) of this section.

(2) Compliance with the sulfur, cetane, and aromatics standards in paragraph (a) of this section shall be determined based on the level of the applicable component or parameter, using the sampling methodologies specified in § 80.330(b), as applicable, and the appropriate testing methodologies specified in § 80.580(a) for sulfur, § 80.2(w) for cetane index, and § 80.2(z) for aromatic content. Any evidence or information, including the exclusive use of such evidence or information, may be used to establish the level of the applicable component or parameter in the diesel fuel, if the evidence or information is relevant to whether that level would have been in compliance with the standard if the appropriate sampling and testing methodology had been correctly performed. Such evidence may be obtained from any source or location and may include, but is not limited to, test results using methods other than the compliance methods in this paragraph (b), business records, and commercial documents.

(3) Determination of compliance with the requirements of this section other than the standards described in paragraph (a) of this section, and determination of liability for any violation of this section, may be based on information obtained from any source or location. Such information may include, but is not limited to, business records and commercial documents.

* * * * *

6. Section 80.30 is amended by revising paragraphs (g)(2)(ii) and (g)(4)(i), and adding paragraph (h), to read as follows;

§ 80.30 Liability for violations of diesel fuel controls and prohibitions.

* * * * *

(g) *Defenses.* * * *

* * * * *

(2) * * *

(ii) Test results, performed in accordance with the applicable sampling and testing methodologies set forth in §§ 80.2(w), 80.2(z), 80.2(bb), and 80.580, which evidence that the diesel fuel determined to be in violation was in compliance with the diesel fuel standards of § 80.29(a) when it was delivered to the next party in the distribution system;

* * * * *

(4) * * *

(i) Test results, performed in accordance with the applicable sampling and testing methodologies set forth in §§ 80.2(w), 80.2(z), 80.2(bb), and 80.580, which evidence that the diesel fuel determined to be in violation was in compliance with the diesel fuel standards of § 80.29(a) when it was delivered to the next party in the distribution system;

* * * * *

(h) *Detection of violations.* In paragraphs (a) through (f) of this section, the term ''is detected at'' means that the violation existed at the facility in question, and the existence of the violation at that facility may be established through evidence obtained or created at that facility, at any other location, and by any party.

7. Section 80.215 is amended by revising paragraph (b) to read as follows:

§ 80.215 What is the scope of the geographic phase-in program?

* * * * *

(b) *Duration of the program.* (1) The geographic phase-in program applies to the 2004, 2005, and 2006 annual averaging periods, except as provided in paragraph (b)(2) of this section.

(2) Subject to the provisions of § 80.540, the geographic phase-in program shall also apply to the 2007 and 2008 annual averaging period for refiners approved for GPA standards in 2007 and 2008 under § 80.540.

* * * * *

8. Section 80.220 is amended by adding paragraph (c) to read as follows:

§ 80.220 What are the downstream standards for GPA gasoline?

* * * * *

(c) Notwithstanding paragraph (a) of this section, the sulfur content standard of 326 ppm at any downstream location may be extended as provided under § 80.540(m).

9. Section 80.240 is amended by adding paragraph (e), to read as follows:

§ 80.240 What are the small refiner gasoline sulfur standards?

* * * * *

(e) Notwithstanding paragraph (a) of this section, the temporary sulfur standards for small refiners may be extended as provided under § 80.553.

10. Subpart I is added to part 80 to read as follows:

Subpart I—Motor Vehicle Diesel Fuel

General Information

Sec.

80.500 What are the implementation dates for the diesel fuel sulfur control program?
80.501 What diesel fuel is subject to the provisions of this subpart?
80.502–80.519 [Reserved]

Motor Vehicle Diesel Fuel Standards and Requirements

80.520 What are the standards and dye requirements for motor vehicle diesel fuel?
80.521 What are the standards and identification requirements for motor vehicle diesel fuel additives?
80.522 May used motor oil be dispensed into diesel motor vehicles?
80.523 What diesel fuel designation requirements apply to refiners and importers?
80.524 What sulfur content standard applies to motor vehicle diesel fuel downstream of the refinery or importer?
80.525 What requirements apply to kerosene blenders?
80.526 [Reserved]
80.527 Under what conditions may motor vehicle diesel fuel subject to the 15 ppm sulfur standard be downgraded as motor vehicle diesel fuel subject to the 500 ppm sulfur standard?
80.528—80.529 [Reserved]

Temporary Compliance Option

80.530 Under what conditions can 500 ppm motor vehicle diesel fuel be produced or imported?
80.531 How are motor vehicle diesel fuel credits generated?
80.532 How are credits used and transferred?
80.533–80.539 [Reserved]

Geographic Phase-In Provisions

80.540 How may a refiner be approved to produce gasoline under the GPA gasoline sulfur standards in 2007 and 2008?
80.541–80.549 [Reserved]

Small Refiner Hardship Provisions

80.550 What is the definition of a small refiner under this subpart?
80.551 How does a refiner obtain approval as a small refiner under this subpart?
80.552 What compliance options are available to small refiners?
80.553 Under what conditions may the small refiner gasoline sulfur standards be extended for a small refiner of motor vehicle diesel fuel?
80.554–80.559 [Reserved]

Other Hardship Provisions

80.560 How can a refiner seek temporary relief from the requirements of this subpart in case of extreme hardship circumstances?
80.561 How can a refiner or importer seek temporary relief from the requirements of this subpart in case of extreme unforseen circumstances?
80.562–80.569 [Reserved]

Labeling Requirements

80.570 What labeling requirements apply to retailers and wholesale purchaser-consumers of motor vehicle diesel fuel?
80.571–80.579 [Reserved]

Sampling and Testing

80.580 What are the sampling and testing methods for sulfur?
80.581–80.589 [Reserved]

Recordkeeping and Reporting Requirements

80.590 What are the product transfer document requirements for motor vehicle diesel fuel?
80.591 What are the product transfer document requirements for additives to be used in motor vehicle diesel fuel?
80.592 What records must be kept?
80.593 What are the reporting and registration requirements for refiners and importers of motor vehicle diesel fuel subject to temporary refiner relief standards?
80.594 What are the pre-compliance reporting requirements?
80.595 How does a refiner apply for a motor vehicle diesel fuel volume baseline?
80.596 How is a refinery motor vehicle diesel fuel volume baseline calculated?
80.597 What are the registration requirements?
80.598–80.599 [Reserved]

Exemptions

80.600 What are the requirements for obtaining an exemption for motor vehicle diesel fuel used for research, development or testing purposes?
80.601 What requirements apply to motor vehicle diesel fuel for use in the Territories?
80.602 What exemption applies to diesel fuel used in vehicles having a national security exemption from motor vehicle emissions standards?
80.603–80.609 [Reserved]

Violation Provisions

80.610 What acts are prohibited under the diesel fuel sulfur program?
80.611 What evidence may be used to determine compliance with the prohibitions and requirements of this subpart and liability for violations of this subpart?
80.612 Who is liable for violations of this subpart?
80.613 What defenses apply to persons deemed liable for a violation of a prohibited act?
80.614 What penalties apply under this subpart?

80.615–80.619 [Reserved]

Provisions for Foreign Refiners and Importers for Motor Vehicle Diesel Fuel Subject to a Temporary Compliance Option or Hardship Provision

80.620 What are the additional requirements for motor vehicle diesel fuel produced by foreign refineries subject to a temporary refiner compliance option or hardship provisions?

Subpart I—Motor Vehicle Diesel Fuel

General Information

§ 80.500 What are the implementation dates for the diesel fuel sulfur control program?

The implementation dates for standards for motor vehicle diesel fuel and diesel fuel additives, and for other provisions of this subpart, are as follows:

(a) *Implementation date for standards applicable to production or importation of motor vehicle diesel fuel, and to motor vehicle diesel fuel additives.* Except as provided in paragraph (d) of this section, beginning June 1, 2006:

(1) The standards and requirements under § 80.520(a) and (b) shall apply to any motor vehicle diesel fuel produced or imported by any refiner or importer; and

(2) The standards and requirements under § 80.521 shall apply to any motor vehicle diesel fuel additive.

(b) *Implementation date for standards applicable to motor vehicle diesel fuel downstream of the refinery or importer.* Except as provided in paragraphs (c) and (d) of this section, beginning July 15, 2006, the standards and requirements under § 80.520(a) and (b) shall apply to any motor vehicle diesel fuel at any downstream location.

(c) *Implementation date for standards applicable to motor vehicle diesel fuel at retail outlets and wholesale purchaser-consumer facilities.* Except as provided in paragraph (d) of this section, beginning September 1, 2006, the standards and requirements under § 80.520(a) and (b) shall apply to any motor vehicle diesel fuel at any retail outlet or wholesale purchaser-consumer facility.

(d) *Implementation date for motor vehicle diesel fuel subject to the 500 ppm sulfur content standard in § 80.520(c).* (1) Beginning June 1, 2006, the sulfur content standard of § 80.520(c) shall apply to motor vehicle diesel fuel, but only where authorized under, and subject to, an applicable provision of this Subpart.

(2) Beginning June 1, 2010, the sulfur content standard of § 80.520(c) shall no longer apply to any motor vehicle diesel fuel produced or imported by any refiner or importer.

(3) Beginning October 1, 2010, the sulfur content standard of § 80.520(c) shall no longer apply to any motor vehicle diesel fuel at any downstream location other than a retail or wholesale purchaser-consumer facility.

(4) Beginning December 1, 2010, the sulfur content standard of § 80.520(c) shall no longer apply to any motor vehicle diesel fuel.

(e) *Other provisions.* All other provisions of this subpart apply beginning June 1, 2006, unless another date is specified.

(f) For purposes of this subpart, the term ''downstream location'' shall mean any point in the diesel fuel distribution system downstream from refineries and import facilities, including diesel fuel at facilities of distributors, carriers, retailers, kerosene blenders, and wholesale purchaser-consumers.

§ 80.501 What diesel fuel is subject to the provisions of this subpart?

(a) *Included fuel and additives.* The provisions of this subpart apply to motor vehicle diesel fuel as defined in § 80.2(y), motor vehicle diesel fuel additives as defined in § 80.2(xx), and motor oil that is used as or intended for use as fuel in diesel motor vehicles or is blended with diesel fuel for use in diesel motor vehicles at any downstream location, as provided in § 80.500(f).

(b) *Excluded fuel.* The provisions of this subpart do not apply to motor vehicle diesel fuel that is designated for export outside the United States, and identified for export by a transfer document as required under § 80.590.

§§ 80.502–80.519 [Reserved]

Motor Vehicle Diesel Fuel Standards and Requirements

§ 80.520 What are the standards and dye requirements for motor vehicle diesel fuel?

(a) *Standards.* All motor vehicle diesel fuel is subject to the following per-gallon standards:

(1) *Sulfur content.* 15 parts per million (ppm) maximum, except as provided in paragraph (c) of this section;

(2) *Cetane index and aromatic content.* (i) A minimum cetane index of 40; or

(ii) A maximum aromatic content of 35 volume percent.

(b) *Dye requirements.* (1) All motor vehicle diesel fuel shall be free of visible evidence of dye solvent red 164 (which has a characteristic red color in diesel fuel), except for motor vehicle diesel fuel that is used in a manner that is tax exempt under section 4082 of the Internal Revenue Code.

(2) Any diesel fuel that does not show visible evidence of dye solvent red 164 shall be considered to be motor vehicle diesel fuel and subject to all the requirements of this subpart for motor vehicle diesel fuel, except for diesel fuel designated or classified for use only in:

(i) The State of Alaska as provided under 40 CFR 69.51; or

(ii) Jet aircraft, a research and development testing program exempted under 80.600, or motor vehicles covered by an exemption under § 80.602.

(c) Pursuant and subject to the provisions of §§ 80.530–80.532, 80.552(a), 80.560–80.561, and 80.620, only motor vehicle diesel fuel produced or imported in full compliance with the requirements of those provisions is subject to the following per-gallon standard for sulfur content: 500 ppm maximum.

(d) Kerosene and any other distillate product, that meets the definition of motor vehicle diesel fuel, is subject to the standards and requirements under this section.

§ 80.521 What are the standards and identification requirements for motor vehicle diesel fuel additives?

(a) Except as provided in paragraph (b) of this section, any motor vehicle diesel fuel additive that is added, intended for adding, used, or offered for use in motor vehicle diesel fuel subject to the 15 ppm sulfur content standard, at any downstream location must:

(1) Have a sulfur content not exceeding 15 ppm; and

(2) Be accompanied a product transfer document pursuant to § 80.591 indicating that the additive complies with the 15 ppm standard for motor vehicle diesel fuel, except for those diesel fuel additives which are only sold in containers for use by the ultimate consumer of motor vehicle diesel fuel and which are subject to the requirements of § 80.591(d).

(b) Any motor vehicle diesel fuel additive that is added, intended for adding, used, or offered for use in motor vehicle diesel fuel subject to the 15 ppm sulfur content standard may have a sulfur content exceeding 15 ppm provided that:

(1) The additive is added or used in the motor vehicle diesel fuel in a quantity less than 1% by volume of the resultant additive/diesel fuel mixture;

(2) The product transfer document pursuant to § 80.591 indicates that the additive may exceed the 15 ppm sulfur standard, that improper use of the additive may result in non-complying fuel, and that the additive complies

with the sulfur information requirements of § 80.591(b)(3); and

(3) The additive is not used or intended for use by an ultimate consumer in diesel motor vehicles.

§ 80.522 May used motor oil be dispensed into diesel motor vehicles?

No person may introduce used motor oil, or used motor oil blended with diesel fuel, into the fuel system of model year 2007 or later diesel motor vehicles, unless both of the following requirements have been met:

(a) The vehicle or engine manufacturer has received a Certificate of Conformity under 40 CFR Part 86 and the certification of the vehicle or engine configuration is explicitly based on emissions data with the addition of motor oil; and

(b) The oil is added in a manner and rate consistent with the conditions of the Certificate of Conformity.

§ 80.523 What diesel fuel designation requirements apply to refiners and importers?

Any refiner or importer shall accurately and clearly designate all fuel it produces or imports for use in diesel motor vehicles as either motor vehicle diesel fuel meeting the 15 ppm sulfur standard under § 80.520(a)(1) or as motor vehicle diesel fuel meeting the 500 ppm sulfur standard under § 80.520(c).

§ 80.524 What sulfur content standard applies to motor vehicle diesel fuel downstream of the refinery or importer?

(a) Except as provided in paragraph (b) of this section or otherwise in the provisions of this Subpart I, the 15 ppm sulfur content standard of § 80.520(a) shall apply to all motor vehicle diesel fuel at any downstream location.

(b) Prior to the October 1, 2010 and December 1, 2010 dates specified in § 80.500(d)(3) and (4), the 500 ppm sulfur content standard of § 80.520(c) shall apply to motor vehicle diesel fuel at any downstream location, provided the following conditions are met:

(1) The product transfer documents comply with the requirements of § 80.590, including indicating that the fuel complies with the 500 ppm sulfur standard for motor vehicle diesel fuel and is for use only in model year 2006 and older diesel motor vehicles, or the fuel is downgraded pursuant to the provision of § 80.527 to motor vehicle diesel fuel subject to the 500 ppm sulfur standard;

(2) The motor vehicle diesel fuel is not represented or intended for sale or use as subject to the 15 ppm sulfur content standard, and is not dispensed, or intended to be dispensed, into model year 2007 and later motor vehicles by a retailer or wholesale purchaser-consumer; and

(3) For retailers or wholesale purchaser-consumers, the pump labeling requirements of § 80.570(a) are satisfied.

§ 80.525 What requirements apply to kerosene blenders?

(a) For purposes of this subpart, a kerosene blender means any refiner who produces motor vehicle diesel fuel by adding kerosene to motor vehicle diesel fuel downstream of the refinery that produced the motor vehicle diesel fuel or of the import facility where the motor vehicle diesel fuel was imported, without altering the quality or quantity of the motor vehicle diesel fuel in any other manner.

(b) Kerosene blenders are not subject to the requirements of this subpart applicable to refiners of motor vehicle diesel fuel, but are subject to the requirements and prohibitions applicable to downstream parties.

(c) For purposes of compliance with § 80.524(b)(1), the product transfer documents must indicate that the fuel to which kerosene is added complies with the 500 ppm sulfur standard for motor vehicle diesel fuel and is for use only in model year 2006 and older diesel motor vehicles, or the fuel is properly downgraded pursuant to the provisions of § 80.527 to motor vehicle diesel fuel subject to the 500 ppm sulfur standard.

(d) Kerosene that a kerosene blender adds or intends to add to motor vehicle diesel fuel subject to the 15 ppm sulfur content standard must meet the 15 ppm sulfur content standard, and the following requirements:

(1) The product transfer document received by the kerosene blender indicates that the kerosene is motor vehicle diesel fuel that complies with the 15 ppm sulfur content standard; or

(2) The kerosene blender has test results indicating the kerosene complies with the 15 ppm sulfur standard.

§ 80.526 [Reserved]

§ 80.527 Under what conditions may motor vehicle diesel fuel subject to the 15 ppm sulfur standard be downgraded as motor vehicle diesel fuel subject to the 500 ppm sulfur standard?

(a) *Definition.* As used in this section, *downgrade* means changing the classification of motor vehicle diesel fuel subject to the 15 ppm sulfur standard under § 80.520(a)(1) to motor vehicle diesel fuel subject to the 500 ppm sulfur standard under § 80.520(c). A *downgrade* occurs when the change in classification takes place. Changing the classification of motor vehicle diesel fuel subject to the 15 ppm sulfur standard under § 80.520(a)(1) to any fuel that is not motor vehicle diesel fuel is not a *downgrade* for purposes of this section and is not limited by the provisions of this section.

(b) *Who may downgrade.* Any person in the motor vehicle diesel fuel distribution system who has custody or title to motor vehicle diesel fuel may downgrade it.

(c) *Downgrading limitation.* (1) Except as provided in paragraphs (d) and (e) of this section, a person described in paragraph (c)(4) of this section may not downgrade a total of more than 20% of the motor vehicle diesel fuel (by volume) that is subject to the 15 ppm sulfur standard of § 80.520(a)(1) while such person has title to or custody of such fuel. In addition, a refiner or importer may only downgrade (subject to the 20% limit) motor vehicle diesel fuel designated under § 80.523 as subject to 15 ppm sulfur standard under § 80.520(a)(1) after it has been so designated and after it has been moved from the refinery's, or import facility's, storage tank or other vessel where the diesel fuel batch was designated as subject to the sulfur standard of § 80.520(a) under § 80.523.

(2) The limitation of paragraph (c)(1) of this section applies separately to each person who has custody or title of the fuel when it is downgraded.

(3) Compliance with the limitation of paragraph (c)(1) of this section shall be on an annual, calendar year basis (except in 2006 compliance shall be for the period June 1, 2006 through December 31, 2006, and in 2010 compliance shall be for the period January 1 through May 31).

(4) The limitation of this section applies to persons who sell, offer for sale, dispense, supply, store or transport diesel fuel. The limitation does not apply to persons who are transferred custody or title to motor vehicle diesel fuel when it is dispensed into motor vehicles at retail outlets.

(d) *Diesel fuel in violation of the 15 ppm standard.* Where motor vehicle diesel fuel subject to the sulfur standard of § 80.520(a)(1) is found to be in violation of any standard under § 80.520(a) and is consequently downgraded, the person, or persons, having custody and title to the fuel at the time it is found to be in violation must include the volume of such fuel toward its 20% volume limitation under paragraph (c)(1) of this section, unless the person, or persons, demonstrates that it did not cause the violation.

(e) *Special provisions for retail outlets and wholesale purchaser-consumer facilities.* Notwithstanding the

provisions of paragraph (c)(1) of this section, retailers and wholesale purchaser-consumers shall comply with the downgrading limitation as follows:

(1) Retailers and wholesale purchaser-consumers who sell, offer for sale, or dispense motor vehicle diesel fuel that is subject to the 15 ppm sulfur standard under § 80.520(a)(1) are exempt from the volume limitations of paragraph (c)(1) of this section.

(2) A retailer or wholesale purchaser-consumer who does not sell, offer for sale, or dispense motor vehicle diesel fuel subject to the 15 ppm sulfur standard under § 80.520(a)(1) may not downgrade a volume of motor vehicle diesel fuel classified as subject to the 15 ppm sulfur standard greater than 20% of the total volume of motor vehicle diesel fuel that it sells, offers for sale, or dispenses annually.

(f) *Product transfer documents.* If the custody or title to any motor vehicle diesel fuel that is downgraded under this section is transferred, the product transfer documents under § 80.590 for such fuel must reflect the change in classification to motor vehicle diesel fuel subject to the 500 ppm sulfur standard.

(g) *Recordkeeping requirement.* Any person subject to the provisions of this section, as described in paragraph (c)(4) of this section, who downgrades any motor vehicle diesel fuel previously classified as subject to the 15 ppm sulfur standard under § 80.520(a)(1) during any calendar year, must make and maintain records sufficient to show compliance with the requirements and limitations of this section.

(h) *Termination of downgrading limitations.* The provisions of this section shall not apply after May 31, 2010.

§§ 80.528–80.529 [Reserved.]

Temporary Compliance Option

§ 80.530 Under what conditions can 500 ppm motor vehicle diesel fuel be produced or imported?

(a) Beginning June 1, 2006, a refiner or importer may produce or import motor vehicle diesel fuel subject to the 500 ppm sulfur content standard of § 80.520(c) if all of the following requirements are met:

(1) Each batch of motor vehicle diesel fuel subject to the 500 ppm sulfur content standard must be designated by the refiner or importer as subject to such standard, pursuant to § 80.523.

(2) The refiner or importer must meet the requirements for product transfer documents in § 80.590 for each batch subject to the 500 ppm sulfur content standard.

(3)(i) The volume V_{500} of diesel fuel that is produced or imported during a compliance period, as provided in paragraph (a)(5) of this section, may not exceed the following volume limit:

(A) For compliance periods prior to 2010, 20% of the volume V_t of diesel fuel that is produced or imported during a compliance period plus an additional volume of motor vehicle diesel fuel represented by credits properly generated and used pursuant to the requirements of §§ 80.531 and 80.532.

(B) For the compliance period of January 1, 2010 through May 31, 2010, the volume of motor vehicle diesel fuel represented by credits properly generated and used pursuant to the requirements of §§ 80.531 and 80.532.

(ii) The terms V_{500} and V_t have the meaning specified in § 80.531(a)(2).

(4) Compliance with the volume limit in paragraph (a)(3) of this section must be determined separately for each refinery. For an importer, such compliance must be determined separately for each Credit Trading Area (as defined in § 80.531) into which motor vehicle diesel fuel is imported. If a party is both a refiner and an importer, such compliance shall be determined separately for the refining and importation activities.

(5) Compliance with the volume limit in paragraph (a)(3) of this section shall be determined on a calendar year basis, where the calendar year period is from January 1st through December 31st. For the year 2006, compliance shall be determined for the period June 1, 2006 through December 31, 2006. For the year 2010, compliance shall be determined for the period of January 1, 2010 through May 31, 2010.

(6) Any motor vehicle diesel fuel produced or imported above the volume limit in paragraph (a)(3) of this section shall be subject to the 15 ppm sulfur content standard. However, for any compliance period prior to and including 2009, a refiner or importer may exceed the volume limit in paragraph (a)(3) of this section by no more than 5 percent of the volume V_t of diesel fuel produced or imported during the compliance period, provided that for the immediately following calendar year:

(i) The refiner or importer complies with the volume limit in paragraph (a)(3) of this section; and

(ii) The refiner or importer produces or imports a volume of motor vehicle diesel fuel subject to the 15 ppm sulfur standard, or obtains credits properly generated and used pursuant to the requirements of §§ 80.531 and 80.532 that represent a volume of motor vehicle diesel fuel, equal to the volume of the exceedence for the prior compliance period.

(b) After May 31, 2010, no refiner or importer may produce or import motor vehicle diesel fuel subject to the 500 ppm sulfur content standard pursuant to this section.

§ 80.531 How are motor vehicle diesel fuel credits generated?

(a) *Generation of credits from June 1, 2006 through December 31, 2009.* (1) A refiner or importer may generate credits during the period June 1, 2006 through December 31, 2009, for motor vehicle diesel fuel produced or imported that is designated as subject to the 15 ppm sulfur content standard under § 80.520(a)(1). Credits may be generated only if the volume of motor vehicle diesel fuel designated under § 80.523 as subject to the 15 ppm sulfur standard of § 80.520(a) exceeds 80% of the total volume of diesel fuel produced or imported as described in paragraph (a)(2) of this section.

(2) The number of credits generated shall be calculated for each compliance period (as specified in § 80.530(a)(5)) as follows:

$$C = V_{15} - (0.80 \times V_t)$$

Where:

C = the positive number of credits generated, in gallons.

V_{15} = the total volume in gallons of motor vehicle diesel fuel produced or imported that is designated under § 80.523 as subject to the standards of § 80.520(a) during the compliance period.

V_{500} = the total volume in gallons of motor vehicle diesel fuel produced or imported that is designated under § 80.523 as subject to the 500 ppm sulfur standard under § 80.520(c) plus the total volume of any other diesel fuel (not including V_{15}, or diesel fuel that is dyed in accordance with § 80.520(b) at the refinery or import facility where the diesel fuel is produced or imported) represented as having a sulfur content not exceeding 500 ppm.

$V_t = V_{15} + V_{500}$.

(3) Credits shall be generated and designated as follows:

(i) Credits shall be generated separately for each refinery of a refiner.

(ii) Credits shall be generated separately for each credit trading area (CTA), as defined in paragraph (a)(5) of this section, into which motor vehicle diesel fuel is imported by an importer.

(iii) Credits shall be designated separately by year of generation and by CTA of generation. In the case of a refiner, credits shall also be designated by refinery, and in the case of an importer, credits shall also be designated by port of import.

(iv) Credits may not be generated by both a foreign refiner and by an importer for the same motor vehicle diesel fuel.

(4) Credits shall be generated by a foreign refiner as provided in § 80.620(c) and this section.

(5) For purposes of this subpart, the CTAs are:

(i) PADDs 1, 2, 3 and 4, as described in § 80.41(r), except as provided in paragraph (a)(5)(iv) of this section. The CTAs shall be designated as CTA 1, 2, 3, and 4, respectively, and correspond to PADD 1, 2, 3, and 4, respectively;

(ii) CTA 5 shall correspond to PADD 5, as described in § 80.41(r), except as provided in paragraphs (a)(5)(iii) and (iv) of this section;

(iii) The states of Hawaii and Alaska shall each be treated as a separate CTA and not a part of CTA 5. Alaska shall be CTA 6. Hawaii shall be CTA 7;

(iv) If any state (through a waiver of federal preemption under Section 211(c)(4) of the Clean Air Act, 42 U.S.C. 7545(c)(4)) implements a law or regulation that requires a greater volume of motor vehicle diesel fuel to meet a sulfur standard of less than or equal to 15 ppm than the volume that is required under this subpart, no motor vehicle diesel fuel produced in that state or imported directly into that state may generate credits under this subpart, effective on the implementation date of the sulfur program under the state statute or regulation that implements the more stringent state requirements.

(6) No credits may be generated under this paragraph (a) after December 31, 2009.

(7) No refinery may generate credits under both this paragraph (a) and under paragraph (e) of this section.

(b) *Generation of early credits from June 1, 2001 through May 31, 2005.* (1) Beginning June 1, 2001, a refiner or importer may generate one credit for each gallon of motor vehicle diesel fuel meeting the sulfur content standard in § 80.520(a)(1) that is used in vehicles with engines that are certified to meet the model year 2007 heavy duty engine PM standard under 40 CFR 86.007–11, or vehicles with retrofit technologies that achieve emission levels equivalent to the 2007 NO_X or PM emission standard verified as part of a retrofit program administered by EPA or a state. Such refiners and importers must comply with the requirements of paragraphs (b) and (d) of this section.

(2)(i) Any refiner or importer planning to generate credits under this paragraph must provide notice of intent to generate early credits at least 120 calendar days prior to the date it begins generating credits under this paragraph by submitting such notice to Attn: Early Diesel Credits Notice, at the address in § 80.595.

(ii) The notice shall include a detailed plan that demonstrates that the motor vehicle diesel fuel meeting the 15 ppm sulfur standard of § 80.520(a)(1) for which credits are generated under this paragraph will be used in vehicles with engines that are certified to meet the model year 2007 heavy duty engine PM standard under 40 CFR 86.007–11 or in vehicles with retrofit technologies that achieve emission levels equivalent to the 2007 NO_X or PM emission standard verified as part of a retrofit program administered by EPA or a state. The notice must include the refiner's or importer's detailed plan for ensuring that all motor vehicle diesel fuel that generates early credits under this paragraph will be segregated from all other motor vehicle diesel fuel not meeting the sulfur standard under § 80.520(a)(1), from the refinery or import facility to its ultimate use in motor vehicles.

(3) No credits may be generated under this paragraph (b) after May 31, 2005.

(4) A refiner or importer may generate credits under this paragraph and also generate credits under paragraph (a) of this section, and a small refiner, as defined under § 80.550, may generate credits under this paragraph (b) and paragraph (e) of this section.

(c) *Generation of early credits from June 1, 2005 through May 31, 2006.* (1) Beginning June 1, 2005, a refiner or importer may generate one credit for each gallon of motor vehicle diesel fuel that is dispensed at retail outlets or at wholesale-purchaser consumer facilities exclusively as motor vehicle diesel fuel meeting the 15 ppm sulfur standard in § 80.520(a)(1). Such refiners and importers must comply with the requirements of this paragraph (c) and paragraph (d) of this section.

(2)(i) Any refiner or importer planning to generate credits under this paragraph must provide notice of intent to generate early credits at least 120 calendar days prior to the date it begins generating credits under this paragraph (c).

(ii) The notice shall include a detailed plan that demonstrates that the motor vehicle diesel fuel meeting the sulfur standard under § 80.520(a)(1) will be dispensed exclusively at retail outlets or at wholesale-purchaser consumer facilities as 15 ppm sulfur content motor vehicle diesel fuel. The plan must demonstrate that the refiner or importer will assure that all motor vehicle diesel fuel that generates early credits under this paragraph (c) will be segregated from all other motor vehicle diesel fuel from the refinery or import facility to its ultimate use in motor vehicles.

(3) No credits may be generated under this paragraph after May 31, 2006.

(4) A refiner or importer may generate credits under this paragraph (c) and also generate credits under paragraph (a) of this section, and a small refiner, as defined under § 80.550, may generate credits under this paragraph (c) and paragraph (e) of this section.

(d) *Additional requirements for early credits.* Early credits generated under paragraphs (b) and (c) of this section are subject to the following additional requirements:

(1) The designation requirements of § 80.523, and all recordkeeping and annual reporting requirements of §§ 80.592, 80.593 and 80.594.

(2) Credits generated under paragraphs (b) and (c) of this section shall be generated separately by CTA as defined in paragraph (a)(5) of this section and must be designated by CTA of generation, and by the refiner and refinery, or by importer and port of import, as applicable.

(3) Credits may not be generated for the same fuel by both a foreign refiner and an importer.

(4) The plan under paragraph (b)(2)(ii) or (c)(2)(ii) of this section must include provisions to include information on product transfer documents and on pump stands dispensing the fuel identifying the fuel as 15 ppm sulfur content motor vehicle diesel fuel. The plan must also identify the specific retail outlets or wholesale purchaser-consumer facilities that the fuel will be provided to. The Administrator may require a refiner or importer to submit additional information, as needed.

(5) In addition to the reporting requirements under paragraph (d)(1) of this section, the refiner or importer must submit a report to the Administrator no later than the last day of February for the prior calendar year period (or for the period June 1, 2001 through December 31, 2001, the period June 1, 2005 through December 31, 2005, or the period January 1, 2006 through May 31, 2006, as applicable) demonstrating that all the motor vehicle diesel fuel produced or imported for which credits were generated met the applicable requirements of paragraph (b), (c), or (d)(4) of this section. If the Administrator finds that such credits did not in fact meet the requirements of paragraphs (b)(1) and (c)(1) of this section, as applicable, or if the Administrator determines that there is insufficient information to determine the validity of such credits, the Administrator may deny the credits submitted in whole or in part.

(e) *Credits generated by small refiners.* (1) Notwithstanding the provisions of paragraph (a) of this section, a small refiner that is approved by the EPA as

a small refiner under § 80.551(g) may generate credits under § 80.552(b). Such a small refiner may generate one credit for each gallon of motor vehicle diesel fuel produced that is designated under § 80.523 as subject to the 15 ppm sulfur standard under § 80.520(a)(1).

(2)(i) Credits may be generated under this paragraph (e) and § 80.552(b) only during the compliance periods beginning June 1, 2006 and ending on May 31, 2010. Credits shall be designated separately by refinery, separately by CTA of generation, and separately by annual compliance period. The annual compliance period for 2006 shall be June 1, 2006 through December 31, 2006. The annual compliance period for 2010 shall be January 1, 2010 through May 31, 2010.

(ii) The small refiner must meet the requirements of paragraphs (d)(1), (d)(2) and (d)(3) of this section, and the recordkeeping and reporting requirements of §§ 80.592, 80.593 and 80.594.

(iii) In addition, a foreign refiner that is approved by the Administrator to generate credits under § 80.552(b) shall comply with the requirements of § 80.620.

§ 80.532 How are credits used and transferred?

(a) *Credit use.* Credits generated under § 80.531 may be used to meet the volume limit of § 80.530(a)(3) provided that:

(1) The credits were generated and reported according to the requirements of this subpart; and

(2) The requirements of paragraphs (b), (c), (d), and (e) of this section are met.

(b) Credits generated under § 80.531 may be used by a refinery or by an importer to comply with section 80.530 by applying one credit for every gallon of motor vehicle diesel fuel needed to meet compliance with the volume limit of § 80.530(a)(3).

(c) Credits generated may be banked for use or transfer in a later compliance period or may be transferred to another refinery or importer for use as provided in paragraph (d) of this section.

(d) *Credit transfers.* (1) Credits obtained from another refinery or from another importer, including early credits and small refiner credits as described in § 80.531 (b), (c) (d), and (e), may be used to satisfy the volume limit of § 80.530(a)(3) if all the following conditions are met:

(i) The credits were generated in the same CTA as the CTA in which credits are used to achieve compliance;

(ii) The credits are used in compliance with the time period limitations for credit use in this subpart;

(iii) Any credit transfer takes place no later than the last day of February following the compliance period when the credits are used;

(iv) No credit may be transferred more than twice, as follows: The first transfer by the refiner or importer who generated the credit may only be made to a refiner or importer who intends to use the credit; if the transferee cannot use the credit, it may make a second and final transfer only to a refiner or importer who intends to use the credit. In no case may a credit be transferred more than twice before being used or terminated;

(v) The credit transferor must apply any credits necessary to meet the transferor's annual compliance requirements before transferring credits to any other refinery or importer;

(vi) No credits may be transferred that would result in the transferor having a negative credit balance; and

(vii) Each transferor must supply to the transferee records indicating the year the credits were generated, the identity of the refiner (and refinery) or importer who generated the credits, the CTA of credit generation, and the identity of the transferring party, if it is not the same party who generated the credits.

(2) In the case of credits that have been calculated or created improperly, or are otherwise determined to be invalid, the following provisions apply:

(i) Invalid credits cannot be used to achieve compliance with the transferee's volume requirements regardless of the transferee's good faith belief that the credits were valid.

(ii) The refiner or importer who used the credits, and any transferor of the credits, must adjust their credit records, reports and compliance calculations as necessary to reflect the proper credits.

(iii) Any properly created credits existing in the transferor's credit balance after correcting the credit balance, and after the transferor applies credits as needed to meet the compliance requirements at the end of the compliance period, must first be applied to correct the invalid transfers before the transferor trades or banks the credits.

(e) *Limitations on credit use.* (1) Credits may not be used to achieve compliance with any requirements of this subpart other than the volume limit of § 80.530(a)(3), unless specifically approved by the Administrator pursuant to a hardship relief petition under § 80.560 or § 80.561.

(2) A refiner or importer possessing credits must use all credits in its possession prior to applying the credit deficit provisions of § 80.530(a)(6).

(3) No credits may be used to meet compliance with this subpart subsequent to the compliance period ending May 31, 2010.

§§ 80.533–80.539 [Reserved]

Geographic Phase-In Provisions

§ 80.540 How may a refiner be approved to produce gasoline under the GPA gasoline sulfur standards in 2007 and 2008?

(a) A refiner that has been approved by EPA under § 80.217 for the geographic phase-in area (GPA) gasoline sulfur content standards under § 80.216 may apply to EPA for approval to produce gasoline subject to the GPA standards in 2007 and 2008. Such application shall be submitted to EPA, at the address provided in § 80.595(b), by December 31, 2001. A foreign refiner must apply under the provisions of paragraph (n) of this section.

(b) The refiner must submit an application in accordance with the provisions of §§ 80.595 and 80.596. The application must also include information, as provided in § 80.594(c), demonstrating that starting no later than June 1, 2006, all motor vehicle diesel fuel produced by the refinery for United States use will comply with the 15 ppm sulfur content standard under § 80.520(a)(1), and that the volume of motor vehicle diesel fuel produced will comply with the volume requirements of paragraph (e) of this section.

(c) The Administrator may approve a refiner's application to produce gasoline subject to the GPA gasoline sulfur content standards in 2007 and 2008 if the provisions of paragraph (b) of this section are satisfied. In approving an application, the Administrator shall establish a motor vehicle diesel fuel volume baseline under §§ 80.595 and 80.596.

(d) Starting June 1, 2006, and continuing through December 31, 2008, all motor vehicle diesel fuel produced by a refiner that has been approved under paragraph (c) of this section to produce gasoline subject to the GPA gasoline sulfur content standards in 2007 and 2008, must be accurately designated under § 80.523 as meeting the 15 ppm sulfur content standard of § 80.520(a)(1).

(e) The total volume of motor vehicle diesel fuel produced for use in the United States and designated as meeting the 15 ppm sulfur content standard under paragraph (d) of this section must meet or exceed 85% of the baseline volume established under paragraph (c) of this section, except that for the year

2006, the total volume must meet or exceed 50% of the baseline volume.

(f) Compliance with the volume requirements in paragraph (e) of this section shall be determined on a calendar year basis, except that for the year 2006 compliance shall be determined for the period June 1, 2006 through December 31, 2006.

(g) If a refiner fails to comply with the requirements of paragraph (d) of this section, or if the approval of the application, including the baseline, was based on false or inaccurate information, the approval to produce gasoline subject to the GPA gasoline sulfur content standards under this section during the years 2007 and 2008 shall be void ab initio, and gasoline produced for use in the GPA must meet the gasoline sulfur content standards of subpart H of this Part as if there had been no approval to produce gasoline subject to the GPA gasoline sulfur content standards in 2007 and 2008.

(h) If for any compliance period a refiner fails to meet the volume requirements in paragraph (e) of this section, the approval to produce gasoline subject to the GPA gasoline sulfur content standards shall be void for that compliance period and for all succeeding compliance periods, and gasoline produced for use in the GPA must meet the gasoline sulfur standards under subpart H of this subpart as if there had been no approval to produce gasoline subject to the GPA gasoline sulfur content standards under this section in 2007 and 2008.

(i) A refiner that is approved for production of gasoline subject to the GPA gasoline sulfur standards under this section in 2007 and 2008 must meet all applicable recordkeeping and reporting requirements of §§ 80.592, 80.593, and 80.594, and shall meet all the recordkeeping and reporting requirements under §§ 80.219, 80.365 and 80.370.

(j) A refiner approved to produce gasoline subject to the GPA gasoline sulfur standards under this section in 2007 and 2008 may not generate or use credits under § 80.531(a) or (e), or § 80.532 unless the approval is vacated as provided in paragraph (k) of this section.

(k) A refiner may petition the Administrator to vacate approval to produce gasoline subject to the GPA gasoline sulfur content standards in 2007 and 2008. EPA may grant such a petition, effective January 1 of the compliance period following EPA's receipt of such petition (or effective June 1, in 2006, if applicable). Upon such effective date and thereafter, gasoline produced for use in the GPA must meet the gasoline sulfur content standards under subpart H of this Part as if there had been no approval to produce gasoline subject to the GPA gasoline sulfur content standards under this section in 2007 and 2008. Upon such effective date, the refiner shall not be subject to the requirements of this section.

(l) The provisions of this section shall apply separately for each refinery of a refiner.

(m) If any refinery is approved for production of gasoline subject to GPA gasoline sulfur content standards under this section in 2007 and 2008, the GPA downstream gasoline sulfur standard under § 80.220(a)(2) shall apply as follows:

(1) During the period of February 1, 2005 through January 31, 2009, the sulfur content of GPA gasoline at any downstream location other than at a retail outlet or wholesale purchaser-consumer facility shall not exceed 326 ppm.

(2) During the period of March 1, 2005 through February 28, 2009, the sulfur content of GPA gasoline at any downstream location shall not exceed 326 ppm.

(n) A foreign refiner may apply to the Administrator to produce gasoline that is subject to the gasoline sulfur standards for GPA gasoline under § 80.216 for the compliance years 2007 and 2008. Such application must be submitted to the EPA, at the address in § 80.595(b), by December 31, 2001.

(1) The Administrator may approve such interim GPA gasoline sulfur standards for the foreign refiner provided that the foreign refiner applies for a gasoline sulfur baseline under paragraph (n)(2) of this section and complies with:

(i) The requirements of paragraphs (b) through (l) of this section;

(ii) The requirements for the import of motor vehicle diesel fuel under § 80.620; and

(iii) All applicable gasoline requirements for refiners under subpart H of this Part, including the foreign refiner requirements under § 80.410, the attest requirements of § 80.415, the recordkeeping and reporting requirements of §§ 80.365 and 80.370, the designation and product transfer document requirements of § 80.219, the sampling and testing requirements of § 80.330, and the sample retention requirements of § 80.335.

(2) The refiner must submit an application for a gasoline sulfur baseline under the provisions of §§ 80.216(a), 80.295, and 80.410(b).

(3) After review of the foreign refiner's individual refinery gasoline sulfur baseline, its individual refinery motor vehicle diesel fuel baseline, and other information submitted with the application, the Administrator may approve such baselines and the application for GPA gasoline sulfur standards for 2007 and 2008.

(o) An importer is not eligible for approval to import gasoline subject to the GPA standards in 2007 or 2008 under this section.

§§ 80.541—80.549 [Reserved]

Small Refiner Hardship Provisions

§ 80.550 What is the definition of a small refiner under this subpart?

(a) A small refiner is defined as any person, as defined by 42 U.S.C. 7602(e), who:

(1) Produces diesel fuel at a refinery by processing crude oil through refinery processing units;

(2) Employed an average of no more than 1,500 people, based on the average number of employees for all pay periods from January 1, 1999, to January 1, 2000; and

(3) Had an average crude capacity less than or equal to 155,000 barrels per calendar day (bpcd) for 1999.

(b) For the purpose of determining the number of employees and crude capacity under paragraph (a) of this section, the refiner shall include the employees and crude capacity of any subsidiary companies, any parent company and subsidiaries of the parent company in which the parent has 50% or greater ownership, and any joint venture partners.

(c) The definition under paragraph (a) of this section applies to domestic and foreign refiners. For any refiner owned by a governmental entity, the number of employees as specified in paragraph (a) of this section shall include all employees and total crude capacity of the government of which the governmental entity is a part.

(d) Notwithstanding the provisions of paragraph (a) of this section, a refiner that acquires a refinery after January 1, 2000, or reactivates a refinery that was shutdown or was non-operational between January 1, 1999, and January 1, 2000, may apply for small refiner status in accordance with the provisions of § 80.551(c)(1)(ii).

(e) *Ineligible parties.* The following are ineligible for the small refiner provisions:

(1) Refiners or refineries built or started up after January 1, 2000;

(2) Persons who exceed the employee or crude oil capacity criteria under this section on January 1, 2000, but who meet these criteria after that date, regardless of whether the reduction in

employees or crude oil capacity is due to operational changes at the refinery or a company sale or reorganization;

(3) Importers; and

(4) Refiners who produce motor vehicle diesel fuel other than by processing crude oil through refinery processing units.

(f)(1) Refiners who qualify as small refiners under this section and who subsequently employ more than 1500 people as a result of merger with or acquisition of another entity, are disqualified as small refiners. If this occurs, the refiner shall notify EPA in writing no later than 20 days following this disqualifying event.

(2) Any refiner whose status changes under this paragraph shall comply with the sulfur standard of § 80.520(a)(1) beginning January 1 of the calendar year following the disqualifying event in paragraph (f)(1) of this section.

(g) Notwithstanding the criteria in paragraph (a) of this section, any small refiner that has been approved by EPA as a small refiner under § 80.235 and meets the criteria of paragraph (a)(1) of this section, will be considered a small refiner under this section as well, for as long as they are a small refiner under § 80.225. The provisions of paragraph (f) of this section apply to any such refiner.

§ 80.551 How does a refiner obtain approval as a small refiner under this subpart?

(a)(1) Applications for small refiner status must be submitted to EPA by December 31, 2001 as part of the refiner's registration under § 80.597.

(2) In the case of a refiner who acquires a refinery after January 1, 2000, or reactivates a refinery that was shutdown between January 1, 1999, and January 1, 2000, the application for small refiner status must be submitted to EPA by June 1, 2003.

(b) Applications for small refiner status must be sent via certified mail with return receipt or express mail with return receipt to: U.S. EPA–Attn: Diesel Small Refiner Status (6406J), 1200 Pennsylvania Avenue, NW (6406J), Washington, DC 20460 (certified mail/return receipt) or Attn: Diesel Small Refiner Status, Transportation and Regional Programs Division,501 3rd Street, NW (6406J), Washington, DC 20001 (express mail/return receipt).

(c) The small refiner status application must contain the following information for the company seeking small refiner status, plus any subsidiary companies, any parent company and subsidiaries of the parent company in which the parent has 50% or greater ownership, and any joint venture partners:

(1)(i) A listing of the name and address of each location where any employee worked during the 12 months preceding January 1, 2000; the average number of employees at each location based upon the number of employees for each pay period for the 12 months preceding January 1, 2000; and the type of business activities carried out at each location; or

(ii) In the case of a refiner who acquires a refinery after January 1, 2000, or reactivates a refinery that was shutdown between January 1, 1999, and January 1, 2000, a listing of the name and address of each location where any employee of the refiner worked since the refiner acquired or reactivated the refinery; the average number of employees at any such acquired or reactivated refinery during each calendar year since the refiner acquired or reactivated the refinery; and the type of business activities carried out at each location.

(2) The total corporate crude capacity of each refinery as reported to the Energy Information Administration (EIA) of the U.S. Department of Energy (DOE) for the most recent 12 months of operation. The information submitted to EIA is presumed to be correct. In cases where a company disagrees with this information, the company may petition EPA with appropriate data to correct the record when the company submits its application for small refiner status. EPA may accept such alternate data at its discretion.

(3) An indication of whether the refiner, for each refinery, is applying for:

(i) The ability to produce motor vehicle diesel fuel subject to the 500 ppm sulfur content standard under § 80.520(c) or generate credits under § 80.531, pursuant to the provisions of § 80.552(a) or (b); or

(ii) An extension of the duration of its small refiner gasoline sulfur standard under § 80.553, pursuant to the provisions of § 80.552(c).

(4) A letter signed by the president, chief operating or chief executive officer of the company, or his/her designee, stating that the information contained in the application is true to the best of his/her knowledge.

(5) Name, address, phone number, facsimile number and e-mail address (if available) of a corporate contact person.

(d) For joint ventures, the total number of employees includes the combined employee count of all corporate entities in the venture.

(e) For government-owned refiners, the total employee count includes all government employees.

(f) Approval of small refiner status for refiners who apply under § 80.550(d) will be based on all information submitted under paragraph (c) of this section, except as provided in § 80.550(d).

(g) EPA will notify a refiner of approval or disapproval of small refiner status by letter. If disapproved, the refiner must comply with the sulfur standard in § 80.520, except as otherwise provided in this subpart.

(h) If EPA finds that a refiner provided false or inaccurate information on its application for small refiner status, upon notice from EPA the refiner's small refiner status will be void ab initio.

(i) Upon notification to EPA, an approved small refiner may withdraw its status as a small refiner. Effective on January 1 of the year following such notification, the small refiner will become subject to the sulfur standard of § 80.520 unless one of the hardship provisions of this subpart apply.

§ 80.552 What compliance options are available to small refiners?

(a) A refiner that has been approved by EPA as a small refiner under § 80.551(g) may produce motor vehicle diesel fuel subject to the 500 ppm sulfur content standard pursuant to the provisions of § 80.530, except that the volume limits of § 80.530(a)(3) shall only apply to that volume V^{500} of diesel fuel that is produced or imported during a calendar year that exceeds 105% of the baseline volume established under § 80.595. The calendar year period shall be from January 1st through December 31st. For the period June 1, 2006 through December 31, 2006, the volume limits shall only apply to that volume VV^{500} that exceeds 60% of the baseline volume.

(b) A refiner that has been approved by EPA as a small refiner under § 80.551(g) may generate motor vehicle diesel fuel credits pursuant to the provisions of § 80.531, except that for purposes of § 80.531(a) the term Credit shall equal VV^{15}, without further adjustment.

(c) A refiner that has been approved by EPA as a small refiner under § 80.551(g) may apply for an extension of the duration of its small refiner gasoline sulfur standards pursuant to § 80.553.

(d) A refiner that produces motor vehicle diesel fuel under the provisions of paragraph (a) of this section or generates credits under the provisions of paragraph (b) of this section may not receive an extension of its small refiner gasoline sulfur standard under the provisions of paragraph (c) of this section. A refiner that receives an extension of its small refiner gasoline

sulfur standard under the provisions of paragraph (c) of this section may not produce motor vehicle diesel fuel under the provisions of paragraph (a) of this section and may not generate credits under the provisions of paragraph (b) of this section.

(e) The provisions of this section shall apply separately for each refinery owned or operated by a small refiner.

§ 80.553 Under what conditions may the small refiner gasoline sulfur standards be extended for a small refiner of motor vehicle diesel fuel?

(a) A refiner that has been approved by EPA for small refiner gasoline sulfur standards under § 80.240 may apply, under § 80.551, for an extension of the duration of its small refiner gasoline sulfur standards through the calendar year 2010 annual averaging period.

(b) As part of its application, the refiner must submit an application for a motor vehicle diesel fuel baseline in accordance with the provisions of §§ 80.595 and 80.596. The application must also include information, as provided in § 80.594, demonstrating that starting no later than June 1, 2006, all motor vehicle diesel fuel produced by the refiner will comply with the 15 ppm sulfur content standard under § 80.520(a)(1), and that the volume of motor vehicle diesel fuel produced will comply with the volume requirements of paragraph (e) of this section.

(c) The Administrator may approve an application for extension of the small refiner gasoline sulfur standards if the provisions of paragraph (b) of this section and §§ 80.595 and 80.596 are satisfied. In approving an application for extension, the Administrator shall establish a motor vehicle diesel fuel volume baseline under §§ 80.595 and 80.596.

(d) Beginning June 1, 2006, and continuing through December 31, 2010, all motor vehicle diesel fuel produced by a refiner that has received an extension of its small refiner gasoline sulfur standards under this section must be accurately designated under § 80.523 as meeting the 15 ppm sulfur content standard under § 80.520(a)(1).

(e) The total volume of motor vehicle diesel fuel produced for use in the United States and designated as meeting the 15 ppm sulfur content standard under paragraph (d) of this section must meet or exceed 85% of the baseline volume established under paragraph (c) of this section, except that for the year 2006, the total volume must meet or exceed 50% of the baseline volume.

(f) Compliance with the volume requirements in paragraph (e) of this section shall be determined on a calendar year basis, except that for the year 2006 compliance shall be determined for the period June 1, 2006 through December 31, 2006.

(g) If a refiner fails to comply with the requirements of paragraph (d) of this section, or if approval of the application, including the baseline, was based on false or inaccurate information, the extension of the applicable small refiner gasoline sulfur standards under this section shall be void ab initio, and all gasoline produced by the refinery must meet the gasoline sulfur standards under subpart H of this Part as if there had been no extension of the small refiner gasoline sulfur standards.

(h) If for any compliance period a refiner fails to meet the volume requirements in paragraph (e) of this section, the extension of the small refiner gasoline sulfur standards shall be void for that compliance period and for all succeeding compliance periods and all gasoline produced by the refinery must meet the gasoline sulfur standards under subpart H of this part as if there had been no extension of the small refiner gasoline sulfur standards under this section for such compliance periods.

(i) A refiner that is approved for an extension of the interim small refiner gasoline sulfur standards under this section must meet all applicable recordkeeping and reporting requirements of §§ 80.592, 80.593, and 80.594, and shall meet all the recordkeeping and reporting requirements under §§ 80.210, 80.365 and 80.370. Any foreign refiner shall meet all additional requirements under §§ 80.620 and 80.410.

(j) A refiner approved for the small refiner gasoline sulfur standards extension under this section may not generate or use credits under § 80.531(a) or (e), or § 80.532.

(k) A refiner may petition the Administrator to vacate an extension of the small refiner gasoline sulfur content standards. EPA may grant such a petition, effective January 1 of the compliance period following receipt of such petition (or effective June 1, 2006, if applicable). Upon such effective date, all gasoline produced by the refiner must meet the gasoline sulfur content standards under subpart H of this Part as if there had been no extension of the small refiner gasoline sulfur content standards under this section. Upon such effective date, the refiner shall not be subject to the requirements of this section.

(l) The provisions of this section shall apply separately for each refinery of a refiner.

§§ 80.554–80.559 [Reserved]

Other Hardship Provisions

§ 80.560 How can a refiner seek temporary relief from the requirements of this subpart in case of extreme hardship circumstances?

(a) EPA may, at its discretion, grant a refiner, for one or more of its refineries, temporary relief from some or all of the provisions of this subpart. Such relief shall be no less stringent than the small refiner compliance options specified in § 80.552. EPA may grant such relief provided that the refiner demonstrates that:

(1) Unusual circumstances exist that impose extreme hardship and significantly affect the refiner's ability to comply by the applicable date; and

(2) It has made best efforts to comply with the requirements of this subpart.

(b) Applications must be submitted to EPA by June 1 2002 to the following address: Applications for small refiner status must be sent via certified mail with return receipt or express mail with return receipt to: U.S. EPA-Attn: Diesel Hardship (6406J), 1200 Pennsylvania Avenue, NW (6406J), Washington, DC 20460 (certified mail/return receipt) or Attn: Diesel Hardship, Transportation and Regional Programs Division, 501 3rd Street, NW (6406J), Washington, DC 20001 (express mail/return receipt). EPA reserves the right to deny applications for appropriate reasons, including unacceptable environmental impact. Approval to distribute motor vehicle diesel fuel not subject to the 15 ppm sulfur standard may be granted for such time period as EPA determines is appropriate, but shall not extend beyond May 31, 2010.

(c) Applications must include a plan demonstrating how the refiner will comply with the requirements of this subpart as expeditiously as possible. The plan shall include a showing that contracts are or will be in place for engineering and construction of desulfurization equipment a plan for applying for and obtaining any permits necessary for construction or operation, projected timeline for beginning and completing construction, and for beginning actual operation of such equipment, and a description of plans to obtain necessary capital, and a detailed estimate of when the requirements of this subpart will be met.

(d) Applicants must provide, at a minimum, the following information:

(1) Detailed description of efforts to obtain capital for refinery investments and efforts made to obtain credits for compliance under § 80.531;

(2) Bond rating of entity that owns the refinery (in the case of joint ventures,

include the bond rating of the joint venture entity and the bond ratings of all partners; in the case of corporations, include the bond ratings of any parent or subsidiary corporations); and

(3) Estimated capital investment needed to comply with the requirements of this subpart by the applicable date.

(e) In addition to the application requirements of paragraph (b) of this section, a refiner's application for temporary relief under this paragraph must also include a compliance plan. Such compliance plan shall demonstrate how the refiner will engage in a quality assurance testing program to ensure that its motor vehicle diesel fuel subject solely to the sulfur standards under § 80.520(c) has not caused motor vehicle diesel fuel subject to the 15 ppm standard § 80.520(a)(1) to fail to comply with that standard. The quality assurance program must at least include periodic sampling and testing at the party's own facilities and at downstream facilities in the refiner's or importer's diesel fuel distribution system, to determine compliance with the applicable sulfur standards for both categories of motor vehicle diesel fuel; examination at the party's own facilities and at applicable downstream facilities, of product transfer documents to confirm appropriate transfers and deliveries of both products; and inspection of retailer and wholesale purchaser-consumer pump stands for the presence of the labels and warning signs required under this section. Any violations that are discovered shall be reported to EPA within 48 hours of discovery.

(f) Applications under this section must be accompanied by:

(1) A letter signed by the president, chief operating or chief executive officer of the company, or his/her designee, stating that the information contained in the application is true to the best of his/her knowledge.

(2) The name, address, phone number, facsimile number and e-mail address of a corporate contact person.

(g) Applicants must also provide any other relevant information requested by EPA.

(h) Refiners who are granted a hardship relief standard for any refinery, and importers of fuel subject to temporary refiner relief standards, may not distribute the diesel fuel subject to the sulfur standard under § 80.520(c) for use in model year 2007 and later vehicles and must comply with all applicable provisions of this subpart, including the provisions of this subpart.

(i) EPA may impose any reasonable conditions on waivers under this section, including limitations on the refinery's volume of motor vehicle diesel fuel subject to a temporary refiner relief standards.

(j) The provisions of this section are available only to refineries that produce diesel fuel from crude.

(k) The individual refinery sulfur standard and the compliance plan will be approved or disapproved by the Administrator, and approval will be effective when the refiner (or importer, as applicable, in the case of compliance plans) receives an approval letter from EPA. If disapproved, the refiner or importer must comply with the motor vehicle diesel fuel standard under § 80.520(a)(1) by the appropriate compliance date specified in § 80.500.

(l) If EPA finds that a refiner provided false or inaccurate information on its application for small refiner status, upon notice from EPA the refiner's small refiner status will be void ab initio.

§ 80.561 How can a refiner or importer seek temporary relief from the requirements of this subpart in case of extreme unforseen circumstances?

In appropriate extreme, unusual, and unforseen circumstances (e.g., natural disaster or refinery fire) which are clearly outside the control of the refiner or importer and which could not have been avoided by the exercise of prudence, diligence and due care, EPA may permit a refiner or importer, for a brief period, to distribute motor vehicle diesel fuel which does not meet the requirements of this subpart if:

(a) It is in the public interest to do so (e.g., distribution of the nonconforming diesel fuel is necessary to meet projected shortfalls which cannot otherwise be compensated for);

(b) The refiner or importer exercised prudent planning and was not able to avoid the violation and has taken all reasonable steps to minimize the extent of the nonconformity;

(c) The refiner or importer can show how the requirements for motor vehicle diesel fuel will be expeditiously achieved;

(d) The refiner or importer agrees to make up any air quality detriment associated with the nonconforming motor vehicle diesel fuel, where practicable;

(e) The refiner or importer pays to the U.S. Treasury an amount equal to the economic benefit of the nonconformity minus the amount expended pursuant to paragraph (d) of this section, in making up the air quality detriment; and

(f) In the case of motor vehicle diesel fuel distributed under this section that does not meet the 15 ppm sulfur standard under § 80.520(a)(1), such diesel fuel shall not be distributed for use in model year 2007 or later motor vehicles, and must meet all the requirements and prohibitions of this subpart applicable to diesel fuel meeting the sulfur standard under § 80.520(c), or to diesel fuel that is not motor vehicle diesel fuel, as applicable.

§§ 80.562–80.569 [Reserved]

Labeling Requirements

§ 80.570 What labeling requirements apply to retailers and wholesale purchaser-consumers of motor vehicle diesel fuel?

(a) Any retailer or wholesale purchaser-consumer who sells, dispenses, or offers for sale or dispensing, motor vehicle diesel fuel subject to the 500 ppm sulfur standard of § 80.520(c), must prominently and conspicuously display in the immediate area of each pump stand from which motor vehicle fuel subject to the 500 ppm standard is offered for sale or dispensing, the following legible label, in block letters of no less than 36-point bold type, printed in a color contrasting with the background:

HIGH-SULFUR DIESEL FUEL—WARNING

May damage model year 2007 and later highway vehicles.

Federal Law *prohibits* use in these vehicles.

(b) Any retailer or wholesale purchaser-consumer who sells, dispenses, or offers for sale or dispensing, motor vehicle diesel fuel subject to the 15 ppm sulfur standard of § 80.520(a)(1), must affix the following conspicuous and legible label, in block letters of no less than 36-point bold type, and printed in a color contrasting with the background, to each pump stand:

LOW-SULFUR DIESEL FUEL

Recommended for use in all diesel vehicles.

Required for model year 2007 and later vehicles.

(c) Any retailer or wholesale purchaser-consumer who sells, dispenses, or offers for sale or dispensing, diesel fuel for nonroad equipment that does not meet the standards for motor vehicle diesel fuel, must affix the following conspicuous and legible label, in block letters of no less than 36-point bold type, and printed in a color contrasting with the background, to each pump stand:

NONROAD DIESEL FUEL—WARNING

May damage or destroy highway engines and their emission controls.

Federal Law *prohibits* use in any highway vehicle.

(d) The labels required by paragraphs (a) through (c) of this section must be placed on the vertical surface of each pump housing and on each side with gallonage and price meters. The labels shall be on the upper two-thirds of the pump, in a location where they are clearly readable by the public.

§§ 80.571–80.579 [Reserved]

Sampling and Testing

§ 80.580 What are the sampling and testing methods for sulfur?

(a) *Diesel fuel and diesel fuel additives.* For purposes of §§ 80.520 and 80.521, the sulfur content of diesel and diesel fuel additives is to be determined in accordance with this section.

(1) *Sampling method.* The applicable sampling methodology provided in § 80.330(b).

(2) *Test method for sulfur.* (i) For diesel fuel and diesel fuel additives subject to the 15 ppm sulfur standard of § 80.520(a)(1), the American Society for Testing and Materials (ASTM) standard method D 6428–99, entitled ''Test Method for Total Sulfur in Liquid Aromatic Hydrocarbons and Their Derivatives by Oxidative Combustion and Electrochemical Detection.''

(ii) For diesel fuel and diesel fuel additives subject to the 500 ppm sulfur standard of 80.520(c), ASTM standard method D 2622–98, ''Standard Test Method for Sulfur in Petroleum Products by X-Ray Spectrometry.''

(3) *Alternative test methods for sulfur.* (i) For diesel fuel and diesel fuel additives subject to the 15 ppm standard of § 80.520(a)(1), sulfur content may be determined using ASTM D 5453–99, entitled ''Standard Test Method for Determination of Total Sulfur in Light Hydrocarbons, Motor Fuels and Oils by Ultraviolet Fluorescence,'' or ASTM D 3120–96, entitled ''Standard Test Method for Trace Quantities of Sulfur in Light Liquid Petroleum Hydrocarbons by Oxidative Microcoulometry,'' provided that the refiner or importer test result is correlated with the appropriate method specified in paragraph (a)(2) of this section.

(ii) For diesel fuel and diesel fuel additives subject to the 500 ppm standard of § 80.520(c), sulfur content may be determined using ASTM D 5453–99, ''Standard Test Method for Determination of Total Sulfur in Light Hydrocarbons, Motor Fuels and Oils by Ultraviolet Fluorescence,'' or ASTM D 6428–00, entitled ''Test Method for Total Sulfur in Liquid Aromatic Hydrocarbons and Their Derivatives by Oxidative Combustion and Electrochemical Detection,'' provided that the refiner or importer test result is correlated with the appropriate method specified in paragraph (a)(2) of this section.

(4) *Adjustment Factor for downstream test results.* An adjustment factor of negative 2 ppm shall be applied to the test results, to account for test variability, but only for testing of motor vehicle diesel fuel identified as subject to the 15 ppm sulfur standard of § 80.520(a)(1), at a downstream location as defined in § 80.500(f).

(b) *Incorporation by reference.* ASTM Standard Methods D 2622–98, ''Standard Test Method for Sulfur in Petroleum Products by Wavelength Dispersive X-ray Fluorescence Spectrometry,'' D 3120–96, ''Standard Test Method for Trace Quantities of Sulfur in Light Liquid Petroleum Hydrocarbons by Oxidative Microcoulometry,'' D 6428–99, ''Test Method for Total Sulfur in Liquid Aromatic Hydrocarbons and Their Derivatives by Oxidative Combustion and Electrochemical Detection,'' and D 5453–00, ''Standard Test Method for Determination of Total Sulfur in Light Hydrocarbons, Motor Fuels and Oils by Ultraviolet Fluorescence,'' are incorporated by reference. This incorporation by reference was approved by the Director of the Federal Register in accordance with 5 U.S.C. 552(a) and 1 CFR part 51. Copies may be obtained from the American Society for Testing and Materials, 100 Barr Harbor Dr., West Conshohocken, PA 19428–2959. Copies may be inspected at the Air Docket Section (LE–131), Room M–1500, U.S. Environmental Protection Agency, Docket No. A–99–06, 401 M Street, SW, Washington, DC 20460, or at the Office of the Federal Register, 800 North Capitol Street, NW, Suite 700, Washington, DC.

§§ 80.581–80.589 [Reserved]

Recordkeeping and Reporting Requirements

§ 80.590 What are the product transfer document requirements for motor vehicle diesel fuel?

On each occasion that any person transfers custody or title to motor vehicle diesel fuel, including distillates used or intended to be used as motor vehicle diesel fuel, except when such fuel is dispensed into motor vehicles at a retail outlet or wholesale purchaser-facility, the transferor must provide to the transferee documents identifying the fuel as motor vehicle diesel fuel, and which include the following information:

(a) The name and address of the transferor and transferee.

(b) The volume of motor vehicle diesel fuel which is being transferred.

(c) The location of the motor vehicle diesel fuel at the time of the transfer.

(d) The date of the transfer.

(e) Except as provided in 40 CFR 69.51, an accurate statement, as applicable, that:

(1) ''This fuel complies with the 15 ppm low sulfur standard for motor vehicle diesel fuel.'';

(2) ''This fuel complies with the 500 ppm high sulfur standard for motor vehicle diesel fuel and is for use only in MY 2006 and older diesel motor vehicles.'';

(3) ''This is high sulfur motor vehicle diesel fuel for use only in Guam, American Samoa, or the Northern Mariana Islands.'';

(4) ''This diesel fuel is for export use only.'';

(5) ''This diesel fuel is for research, development, or testing purposes only.'';

(6) ''This diesel fuel is for use in diesel vehicles having an EPA-approved national security exemption only.''.

(f) For motor vehicle diesel fuel that contains visible evidence of the dye solvent red 164, and is intended to be used in a manner that is tax-exempt as defined under section 4082 of the Internal Revenue Code, the following statement:

This fuel is motor vehicle diesel fuel for tax-exempt use only, in accordance with Section 4082 of the Internal Revenue Code.

(g) Except for transfers to truck carriers, retailers or wholesale purchaser-consumers, product codes may be used to convey the information required under this section if such codes are clearly understood by each transferee. Codes used to convey the statement in paragraph (e)(1) of this section must contain the number ''15'', and codes used to convey the statement in paragraph (e)(2) of this section must contain the number ''500''.

(h) Beginning June 1, 2001 and ending May 31, 2005, any transfer subject to this section, which is also subject to the early credit provisions of § 80.531(b), must comply with all applicable requirements of this section except those in paragraph (e) of this section.

(i) Beginning June 1, 2005 and ending May 31, 2006, any transfer subject to this section, which is also subject to the early credit requirements of § 80.531(c), must comply with all applicable requirements of this section.

§ 80.591 What are the product transfer document requirements for additives to be used in diesel fuel?

(a) Except as provided in paragraphs (b) and (d) of this section, on each

occasion that any person transfers custody or title to a motor vehicle diesel fuel additive to a party in the additive distribution system or in the motor vehicle diesel fuel distribution system for use downstream of the diesel fuel refiner, the transferor must provide to the transferee documents which identify the additive, and:

(1) Identify the name and address of the transferor and transferee; the date of transfer; the location at which the transfer took place; the volume of additive transferred; and

(2) Indicates compliance with the 15 ppm sulfur standard by inclusion of the following statement:

The sulfur content of this diesel fuel additive does not exceed 15 ppm.

(b) On each occasion that any person transfers custody or title to a motor vehicle diesel fuel additive subject to the requirements of § 80.521(b), to a party in the additive distribution system or in the motor vehicle diesel fuel distribution system for use in diesel fuel downstream of the diesel fuel refiner, the transferor must provide to the transferee documents which identify the additive, and:

(1) Identify the name and address of the transferor and transferee; the date of transfer; the location at which the transfer took place; the volume of additive transferred.

(2) Indicate the high sulfur potential of the additive by inclusion of the following statement:

This motor vehicle diesel fuel additive may exceed the federal 15 ppm sulfur standard. Improper use of this additive may result in non-complying diesel fuel.

(3) Includes the following information:

(i) The additive's maximum sulfur concentration;

(ii) The maximum recommended concentration in volume percent for use of the additive in diesel fuel; and

(iii) The contribution to the sulfur level of the fuel, in ppm, that would result if the additive is used at the maximum recommended concentration.

(c) Except for transfers of motor vehicle diesel fuel additives to truck carriers, retailers or wholesale purchaser-consumers, product codes may be used to convey the information required under paragraphs (a) and (b) of this section, if such codes are clearly understood by each transferee. Codes used to convey the statement in paragraph (a)(2) of this section must contain the number ''15'' and codes used to convey the statement in paragraph (b)(2) of this section may not contain such number.

(d) For those motor vehicle diesel fuel additives which are sold in containers for use by the ultimate consumer of diesel fuel, each transferor must have displayed on the additive container, in a legible and conspicuous manner, either of the following statements, as applicable:

(1) ''This diesel fuel additive complies with the federal low sulfur content requirements for use in diesel motor vehicles.''; or

(2) For those additives sold in containers for use by the ultimate consumer, with a sulfur content in excess of 15 ppm: ''This diesel fuel additive does not comply with federal low sulfur content requirements for use in model year 2007 and newer diesel motor vehicles.''.

§ 80.592 What records must be kept?

(a) *Records that must be kept by parties in the motor vehicle diesel fuel and motor vehicle diesel fuel additive distribution systems.* Beginning June 1, 2006, or for a refiner the first compliance period in which the refiner is generating early credits under § 80.531(b) or (c), whichever is earlier, any person who produces, imports, sells, offers for sale, dispenses, distributes, supplies, offers for supply, stores, or transports motor vehicle diesel fuel subject to the provisions of this subpart, must keep the following records:

(1) The applicable product transfer documents required under §§ 80.590 and 80.591;

(2) For any sampling and testing for sulfur content, cetane index or aromatics content of motor vehicle diesel fuel or motor vehicle diesel fuel additives, conducted as part of a quality assurance program or otherwise:

(i) The location, date, time and storage tank or truck identification for each sample collected;

(ii) The name and title of the person who collected the sample and the person who performed the testing; and

(iii) The results of the tests for sulfur content (including where applicable the test results with and without application of the adjustment factor under § 80.580(a)(4)) or other standard content, and the volume of product in the storage tank or container from which the sample was taken;

(3) The actions the party has taken, if any, to stop the sale or distribution of any motor vehicle diesel fuel found not to be in compliance with the sulfur standards specified in this subpart, and the actions the party has taken, if any, to identify the cause of any noncompliance and prevent future instances of noncompliance.

(b) *Additional records to be kept by refiners and importers of motor vehicle diesel fuel subject to temporary refiner relief standards, small refiner standards, and early credit provisions.* Beginning June 1, 2006, or for a refiner the first compliance period in which the refiner is generating early credits under § 80.531(b) or (c), whichever is earlier, any refiner producing motor vehicle diesel fuel subject to the sulfur standard under § 80.520(a)(1), for each of its refineries, and any importer importing such motor vehicle diesel fuel, shall keep records that include the following information for each batch of motor vehicle diesel fuel produced or imported:

(1) The batch volume.

(2) The batch number, assigned under the batch numbering procedures under § 80.65(d)(3).

(3) The date of production or import.

(4) A record designating the batch as meeting the 500 ppm sulfur standard or the 15 ppm sulfur standard.

(5) For foreign refiners, the designations and other records required to be kept under § 80.620.

(6) In the case of importers, the designations and other records required under § 80.620(o).

(7) Information regarding credits, kept separately for each calendar year compliance period, kept separately for each refinery and in the case of importers, kept separately for imports into each CTA, as follows:

(i) The number of credits in the refiner's or importer's possession at the beginning of the calendar year;

(ii) The number of credits generated;

(iii) The number of credits used;

(iv) If any were obtained from or transferred to other parties, for each such other party, its name, its EPA refiner or importer registration number consistent with § 80.593(d), in the case of credits generated by an importer the port and CTA of import of the diesel fuel that generated the credits, and the number obtained from, or transferred to, the other party;

(v) The number in the refiner's or importer's possession that will carry over into the subsequent calendar year compliance period; and

(vi) Commercial documents that establish each transfer of credits from the transferor to the transferee.

(8) The calculations used to determine compliance with the volume requirements of this subpart.

(9) The calculations used to determine the number of credits generated.

(10) A copy of reports submitted to EPA under § 80.593.

(c) *Additional records importers must keep.* Any importer shall keep records

that identify and verify the source of each batch of certified diesel fuel program foreign refiner (DFR)-Diesel and non-certified DFR-Diesel imported and demonstrate compliance with the requirements under § 80.620.

(d) *Length of time records must be kept.* The records required in this section shall be kept for five years from the date they were created, except that records relating to credit transfers shall be kept by the transferor for 5 years from the date the credits were transferred, and shall be kept by the transferee for 5 years from the date the credits were transferred, used or terminated, whichever is later.

(e) *Make records available to EPA.* On request by EPA the records required in paragraphs (a), (b) and (c) of this section must be made available to the Administrator or the Administrator's authorized representative. For records that are electronically generated or maintained the equipment and software necessary to read the records shall be made available, or if requested by EPA, electronic records shall be converted to paper documents which shall be provided to the Administrator's authorized representative.

§ 80.593 What are the reporting and registration requirements for refiners and importers of motor vehicle diesel fuel subject to temporary refiner relief standards?

Beginning with 2006, or the first compliance period during which credits are generated under § 80.531(b) or (c), whichever is earlier, any refiner or importer who produces or importes motor vehicle diesel fuel subject to the 500 ppm sulfur standard under § 80.520(c), or any refiner or importer who generates, uses, obtains or transfers credits under §§ 80.530 through 80.532, and continuing for each year thereafter, must submit to EPA annual reports that contain the information required in this section, and such other information as EPA may require:

(a) *Refiners and importers.* Refiners and importers must report the following information separately for each refinery or CTA, in the case of importers, subject to a phase-in sulfur standard, small refiner standard or temporary refiner relief sulfur standard, or who generates, uses or transfers credits under §§ 80.530 through 80.532:

(1) The refiner's name and the EPA refinery registration number.

(2) For all motor vehicle diesel fuel produced for use in the United States during the compliance period:

(i) The total volume of motor vehicle diesel fuel produced;

(ii) The volume, in gallons, that complied with a sulfur content standard of 500 ppm; and

(iii) The volume, in gallons, that complied with the 15 ppm sulfur content standard.

(3) The percentage of the volume motor vehicle diesel fuel produced during the calendar year that met the 15 ppm sulfur standard and the percentage that met the 500 ppm sulfur standard prior to the application of any volume credits.

(4) The percentage of volume of motor vehicle diesel fuel produced meeting the 15 ppm sulfur standard after the inclusion of any credits.

(5) Information regarding credits, separately for each refinery and for credits or debits related to imported motor diesel fuel, separately by importer and separately by CTA of import as follows:

(i) The CTA of the refiner's refinery or the importer's or the foreign refiner's CTA and port of importation;

(ii) The number of credits at the beginning of the compliance period;

(iii) The number of credits generated;

(iv) The number of credits used;

(v) If any credits were obtained from or transferred to other refineries or import ports, for each other refinery or importer, its name, address (or Port) and CTA, EPA refinery or importer registration number, and the number of credits obtained from or transferred to the other refinery or importer (by import CTA);

(vi) The number of credits, if any, that will carry over to the subsequent compliance period; and

(vii) The number of credits in deficit that must be made up for the following year;

(6) The reporting requirements under § 80.620, if applicable.

(7) For each batch of motor vehicle diesel fuel produced or imported during the compliance period:

(i) The batch number assigned using the batch numbering conventions under § 80.65(d)(3) and the appropriate designation under § 80.523;

(ii) The date the batch was produced; and

(iii) The volume of the batch, in gallons.

(8) When submitting reports under this paragraph (a), any importer shall exclude certified DFR-Diesel.

(b) *Additional reporting requirements for importers.* Importers of motor vehicle diesel fuel subject to the 500 ppm sulfur standard must report the following information:

(1) The importer's name and EPA registration number.

(2) For each foreign refinery from which motor vehicle diesel fuel is imported that is subject to a sulfur standard under § 80.520(c), the importer must report, for each batch of diesel fuel imported, the information required to be reported under § 80.620(o).

(c) *Report submission.* Any annual report required by this section shall be:

(1) Signed and certified as meeting all the applicable requirements of this subpart by the owner or a responsible corporate officer of the refiner or importer; and

(2) Submitted to EPA no later than the last day of February for the prior calendar year period.

§ 80.594 What are the pre-compliance reporting requirements?

(a) Beginning on June 1, 2003, and on June 1, 2004 and June 1, 2005, all refiners and importers planning to produce or import motor vehicle diesel fuel subject to the provisions of this subpart, shall submit the following information to EPA:

(1) Any changes to the information submitted for the company registration;

(2) Any changes to the information submitted for any refinery or import facility registration;

(3) An estimate of the annual production or importation, in gallons, after June 1, 2006, for each refinery and import facility, of 15 ppm motor vehicle diesel fuel produced from crude oil and, if applicable, 500 ppm motor vehicle diesel fuel produced from crude oil, and the volumes of each grade of motor vehicle diesel fuel produced from other sources;

(4) If expecting to participate in the temporary compliance options provisions and the credit trading program, estimates of the number of credits to be generated and/or used each year the program is applicable;

(5) Information regarding engineering plans (e.g., design and construction), the status of obtaining any necessary permits, and capital commitments for making the necessary modifications to produce low sulfur motor vehicle fuel, and actual construction progress. The pre-compliance reports due 2004 and 2005 must provide an update of the progress in each of these areas.

(b) Beginning on June 1, 2003, all approved small refiners shall submit the following additional information to EPA, as applicable:

(1) In the case of a refinery with an approved application under § 80.552(a):

(i) A showing that sufficient sources of 15 ppm motor vehicle diesel fuel will likely be available in its marketing area after June 1, 2006 and through 2010;

(ii) If after 2003 the sources of 15 ppm motor vehicle diesel fuel decrease, the pre-compliance reports for 2004 and/or

2005 must identify this change and must include a supplementary showing that the sources of 15 ppm motor vehicle diesel fuel are still sufficient.

(2) In case of a refinery with an approved application under § 80.552(c), a demonstration that by June 1, 2006 its motor vehicle diesel fuel will be at 15 ppm sulfur at a volume at least 85% of its baseline motor vehicle diesel fuel volume.

(c) For each refiner and importer approved under § 80.540, a demonstration that by June 1, 2006 all of its motor vehicle diesel fuel will be at 15 ppm sulfur at a volume of at least 85% of its baseline motor vehicle diesel fuel volume.

(d) By July 1, 2006, each refiner and importer of motor vehicle diesel fuel shall submit a report to EPA stating that the production or importation of 15 ppm sulfur motor vehicle diesel fuel commenced by June 1, 2006.

§ 80.595 How does a refiner apply for a motor vehicle diesel fuel volume baseline?

(a) Any small refiner applying for extension of the duration of its small refiner gasoline sulfur standards of § 80.240, under §§ 80.552(c) and 80.553, or any refiner applying for an extension of the duration of the GPA standards under § 80.540 must apply for a motor vehicle diesel fuel volume baseline by December 31, 2001. A separate volume baseline must be sought for each refinery for which application of the provisions of § 80.553 or § 80.540 is sought.

(b) The volume baseline must be sent via certified mail with return receipt or express mail with return receipt to: U.S. EPA-Attn: Diesel Baseline (6406J), 1200 Pennsylvania Avenue, NW (6406J), Washington, DC 20460 (certified mail/return receipt) or Attn: Diesel Baseline, Transportation and Regional Programs Division, 501 3rd Street, NW (6406J), Washington, DC 20001 (express mail/return receipt).

(c) The motor vehicle diesel fuel volume baseline application must include the following information:

(1) A listing of the names and addresses of all refineries owned by the refiner for which the refiner is applying for a motor vehicle diesel fuel volume baseline.

(2) The average annual volume (in gallons) of motor vehicle diesel fuel produced for U.S. use in 1998 and 1999, for each refinery for which the refiner is applying for such baseline, calculated in accordance with § 80.596. The refiner shall follow the procedures, applicable to volume baselines and using motor vehicle diesel fuel instead of gasoline, specified in §§ 80.91 through 80.93 to establish the volume of motor vehicle diesel fuel that was produced for U.S. use in 1998 and 1999 for purposes of establishing a volume baseline under this section.

(3) A letter signed by the president, chief operating, or chief executive officer of the company, or his/her delegate, stating that the information contained in the volume baseline determination is true to the best of his/her knowledge.

(4) Name, address, phone number, facsimile number, and e-mail address (if availabale) of a corporate contact person.

(5) The following information for each batch of motor vehicle diesel fuel produced for U.S. use in 1998 and 1999:

(i) Batch number assigned to the batch under procedures such as those in § 80.65(d) or § 80.101(i), or, if unavailable, such other identifying information as is available; and

(ii) Volume of the batch, in gallons.

(6) For a refinery that was not in operation during part or all of the period 1998 and 1999, the information required under this paragraph (c) for the motor vehicle diesel fuel produced for U.S. use during the most recent calendar year that the refinery was in operation after the refinery was reactivated.

(d) Within 120 days of receipt of an application under this section, EPA will notify the refiner of an approval of the refinery's baseline, or of any deficiencies in the application.

(e) If at any time the baseline submitted in accordance with the requirements of this section is determined to be incorrect, EPA will notify the refiner of the corrected baseline. The corrected baseline shall apply to all applicable compliance calculations under this subpart.

(f)(1) If insufficient information is available for the Administrator to establish a baseline under the provisions of paragraph (c) of this section and § 80.596(a), the refiner shall submit additional information sufficient for the Administrator to establish a baseline.

(2) To satisfy the requirements of paragraph (f)(1) of this section, the Administrator may require, and consider, any information pertinent to establish a baseline, including:

(i) Motor vehicle diesel fuel production volumes for other years;

(ii) Crude capacity of the refinery;

(iii) The ratio, or the typical ratio, for other similarly sized or configured refineries, between motor vehicle diesel fuel production and gasoline production.

§ 80.596 How is a refinery motor vehicle diesel fuel volume baseline calculated?

(a) For purposes of this subpart, a refinery's motor vehicle diesel fuel volume baseline is calculated using the following equation:

$$V_{Base} = \frac{\sum_{i=1}^{n}(V_i)}{m/12}$$

Where:

V_{Base} = Volume baseline value.

V_i = Volume of motor vehicle diesel fuel batch i.

n = Total number of batches of motor vehicle diesel fuel produced for U.S. use during January 1, 1998 through December 31, 1999 (or the total number of batches of motor vehicle diesel fuel produced during the most recent calendar year the refinery was in operation after being reactivated pursuant to § 80.595(c)(6)); or, for a foreign refinery, the total number of batches of motor vehicle diesel fuel produced and imported into the U.S. during January 1, 1998 through December 31, 1999 (or the total number of batches of motor vehicle diesel fuel produced and imported into the U.S. during the most recent calendar year the refinery was in operation after being reactivated pursuant to § 80.595(c)(6)).

i = Individual batch of motor vehicle diesel fuel produced during January 1, 1998 through December 31, 1999 (or individual batch of motor vehicle diesel fuel produced during the most recent calendar year the refinery was in operation after being reactivated pursuant to § 80.595(c)(6)); or, for a foreign refinery, individual batch of motor vehicle diesel fuel produced and imported into the U.S. during January 1, 1998 through December 31, 1999 (or individual batch of motor vehicle diesel fuel produced and imported into the U.S. during the most recent calendar year the refinery was in operation after being reactivated pursuant to § 80.595(c)(6)).

m = Number of months in the baseline period (24 except in the case of a startup or reactivation).

(b) If insufficient information is available for the Administrator to establish a baseline under paragraph (a) of this section, the baseline may be determined under the provisions of § 80.595(f).

§ 80.597 What are the registration requirements?

Refiners having any refinery that is subject to a sulfur standard under § 80.520(c), and importers importing such diesel fuel, must provide EPA the information under § 80.76 no later than December 31, 2001, if such information has not been provided under the provisions of this part. In addition, for each import facility, the same identifying information as required for each refinery under § 80.76(c) must be provided.

§§ 80.598–80.599 [Reserved]

Exemptions

§ 80.600 What are the requirements for obtaining an exemption for motor vehicle diesel fuel used for research, development or testing purposes?

(a) *Written request for R&D exemption.* Any person may receive an exemption from the provisions of this subpart for motor vehicle diesel fuel used for research, development, or testing (''R&D'') purposes by submitting the information listed in paragraph (c) of this section to:

(1) Director (6406J), Transportation and Regional Programs Division, U.S. Environmental Protection Agency, Ariel Rios Building, 1200 Pennsylvania Avenue, NW., Washington, DC 20460 (postal mail); or

(2) Director (6406J), Transportation and Regional Programs Division, U.S. Environmental Protection Agency, 501 3rd Street, NW., Washington, DC 20001 (express mail/courier); and

(3) Director (2242A), Air Enforcement Division, U.S. Environmental Protection Agency, Ariel Rios Building, 1200 Pennsylvania Avenue, NW., Washington, DC 20460.

(b) *Criteria for an R&D exemption.* For an R&D exemption to be granted, the person requesting an exemption must:

(1) Demonstrate a purpose that constitutes an appropriate basis for exemption;

(2) Demonstrate that an exemption is necessary;

(3) Design an R&D program to be reasonable in scope; and

(4) Exercise a degree of control consistent with the purpose of the program and EPA's monitoring requirements.

(c) *Information required to be submitted.* To demonstrate each of the elements in paragraphs (b)(1) through (4) of this section, the person requesting an exemption must include the following information in the written request required under paragraph (a) of this section:

(1) A concise statement of the purpose of the program demonstrating that the program has an appropriate R&D purpose.

(2) An explanation of why the stated purpose of the program cannot be achieved in a practicable manner without performing one or more of the prohibited acts under this subpart.

(3) To demonstrate the reasonableness of the scope of the program:

(i) An estimate of the program's duration in time and, if appropriate, mileage;

(ii) An estimate of the maximum number of vehicles or engines involved in the program;

(iii) The manner in which the information on vehicles and engines used in the program will be recorded and made available to the Administrator upon request; and

(iv) The quantity of diesel fuel which does not comply with the requirements of §§ 80.520 through 80.525.

(4) With regard to control, a demonstration that the program affords EPA a monitoring capability, including:

(i) The site(s) of the program (including facility name, street address, city, county, state, and zip code);

(ii) The manner in which information on vehicles and engines used in the program will be recorded and made available to the Administrator upon request;

(iii) The manner in which information on the diesel fuel used in the program (including quantity, fuel properties, name, address, telephone number and contact person of the supplier, and the date received from the supplier), will be recorded and made available to the Administrator upon request;

(iv) The manner in which the party will ensure that the R&D fuel will be segregated from motor vehicle diesel fuel and fuel pumps will be labeled to ensure proper use of the R&D diesel fuel;

(v) The name, address, telephone number and title of the person(s) in the organization requesting an exemption from whom further information on the application may be obtained; and

(vi) The name, address, telephone number and title of the person(s) in the organization requesting an exemption who is responsible for recording and making available the information specified in this paragraph (c), and the location where such information will be maintained.

(d) *Additional requirements.* (1) The product transfer documents associated with R&D motor vehicle diesel fuel must comply with requirements of § 80.590(b)(5).

(2) The R&D diesel fuel must be designated by the refiner or supplier, as applicable, as R&D diesel fuel.

(3) The R&D diesel fuel must be kept segregated from non-exempt motor vehicle diesel fuel at all points in the distribution system.

(4) The R&D diesel fuel must not be sold, distributed, offered for sale or distribution, dispensed, supplied, offered for supply, transported to or from, or stored by a diesel fuel retail outlet, or by a wholesale purchaser-consumer facility, unless the wholesale purchaser-consumer facility is associated with the R&D program that uses the diesel fuel.

(5) At the completion of the program, any emission control systems or elements of design which are damaged or rendered inoperative shall be replaced on vehicles remaining in service, or the responsible person will be liable for a violation of the Clean Air Act Section 203(a)(3) unless sufficient evidence is supplied that the emission controls or elements of design were not damaged.

(e) *Mechanism for granting of an exemption.* A request for an R&D exemption will be deemed approved by the earlier of sixty (60) days from the date on which EPA receives the request for exemption, (provided that EPA has not notified the applicant of potential disapproval by that time), or the date on which the applicant receives a written approval letter from EPA.

(1) The volume of diesel fuel subject to the approval shall not exceed the estimated amount in paragraph (c)(3)(iv) of this section, unless EPA grants a greater amount in writing.

(2) Any exemption granted under this section will expire at the completion of the test program or three years from the date of approval, whichever occurs first, and may only be extended upon re-application consistent will all requirements of this section.

(3) The passage of sixty (60) days will not signify the acceptance by EPA of the validity of the information in the request for an exemption. EPA may elect at any time to review the information contained in the request, and where appropriate may notify the responsible person of disapproval of the exemption.

(4) In granting an exemption the Administrator may include terms and conditions, including replacement of emission control devices or elements of design, that the Administrator determines are necessary for monitoring the exemption and for assuring that the purposes of this subpart are met.

(5) Any violation of a term or condition of the exemption, or of any requirement of this section, will cause the exemption to be void ab initio.

(6) If any information required under paragraph (c) of this section should change after approval of the exemption, the responsible person must notify EPA in writing immediately. Failure to do so may result in disapproval of the exemption or may make it void ab initio, and may make the party liable for a violation of this subpart.

(f) *Effects of exemption.* Motor vehicle diesel fuel that is subject to an R&D exemption under this section is exempt from other provisions of this subpart provided that the fuel is used in a manner that complies with the purpose of the program under paragraph (c) of

this section and the requirements of this section.

(g) *Notification of Completion.* The party shall notify EPA in writing within thirty (30) days of completion of the R&D program.

§ 80.601 What requirements apply to motor vehicle diesel fuel for use in the Territories?

The sulfur standards of § 80.520(a)(1) and (c) do not apply to diesel fuel that is produced, imported, sold, offered for sale, supplied, offered for supply, stored, dispensed, or transported for use in the Territories of Guam, American Samoa or the Commonwealth of the Northern Mariana Islands provided that such diesel fuel is:

(a) Designated by the refiner or importer as high sulfur diesel fuel only for use in Guam, American Samoa, or the Commonwealth of the Northern Mariana Islands;

(b) Used only in Guam, American Samoa, or the Commonwealth of the Northern Mariana Islands;

(c) Accompanied by documentation that complies with the product transfer document requirements of § 80.590(e)(3); and

(d) Segregated from non-exempt motor vehicle diesel fuel at all points in the distribution system from the point the diesel fuel is designated as exempt fuel only for use in Guam, American Samoa, or the Commonwealth of the Northern Mariana Islands, while the exempt fuel is in the United States but outside these Territories.

§ 80.602 What exemption applies to diesel fuel used in vehicles having a national security exemption from motor vehicle emissions standards?

The motor vehicle diesel fuel standards of § 80.520(a)(1), (a)(2), and (c) do not apply to diesel fuel that is produced, imported, sold, offered for sale, supplied, offered for supply, stored, dispensed, or transported for use in:

(a) Vehicles for which EPA has granted a national security exemption under 40 CFR 85.1708 from motor vehicle emissions standards under 40 CFR Part 86; or

(b) Tactical military motor vehicles that are not subject to a national security exemption from motor vehicle emissions standards but for national security purposes (for purposes of readiness for deployment oversees) need to be fueled on the same fuel as motor vehicles for which EPA has granted a national security exemption, provided that such fuel is:

(1) Used only in vehicles identified in paragraph (a) of this section or this paragraph (b);

(2) Accompanied by product transfer documents as required under § 80.590;

(3) Segregated from non-exempt motor vehicle diesel fuel at all points in the distribution system; and

(4) Dispensed from a fuel pump stand, fueling truck or tank that is labeled under the provisions of § 80.570(c). Any such fuel pump stand, fueling truck or tank may also be labeled with the appropriate designation of the fuel, such as ''JP–8''.

§ 80.603–80.609 [Reserved]

Violation Provisions

§ 80.610 What acts are prohibited under the diesel fuel sulfur program?

No person shall:

(a) *Standard or dye violation.* Produce, import, sell, offer for sale, dispense, supply, offer for supply, store or transport motor vehicle diesel fuel that does not comply with the applicable standards and dye requirements under § 80.520.

(b) *Additive violation.* (1) Produce, import, sell, offer for sale, dispense, supply, offer for supply, store or transport any motor vehicle diesel fuel additive for use at a downstream location that does not comply with the requirements under § 80.521(a) or (b), as applicable.

(2) Blend or permit the blending into motor vehicle diesel fuel at a downstream location, or use, or permit the use, as motor vehicle diesel fuel, of any additive which does not comply with the requirements of § 80.521(a) or (b), as applicable.

(c) *Used motor oil violation.* Introduce into the fuel system of model year 2007 or later diesel motor vehicles, or permit the introduction into the fuel system of such vehicles of used motor oil, or used motor oil blended with diesel fuel, which does not comply with the requirements of § 80.522.

(d) *Improper fuel usage violation.* (1) Introduce, or permit the introduction of, diesel fuel into model year 2007 or later diesel motor vehicles, and beginning December 1, 2010 into any diesel motor vehicle, which does not comply with the standards and dye requirements of § 80.520(a) and (b).

(2) Produce, import, sell, offer for sale, dispense, offer for supply, store, or transport for use in model year 2007 or later diesel motor vehicles, or introduce or permit the introduction into such motor vehicles, motor vehicle diesel fuel that is identified as other than diesel fuel complying with the 15 ppm sulfur standard; and beginning December 1, 2010, diesel fuel for use in or introduced into any diesel motor vehicle.

(e) *Cause another party to violate.* Cause another person to commit an act in violation of paragraphs (a) through (d) of this section.

(f) *Cause violating fuel or additive to be in the distribution system.* Cause motor vehicle diesel fuel to be in the motor vehicle diesel fuel distribution system which does not comply with the applicable standard and dye requirements of § 80.520(a) and (b), or cause any motor vehicle diesel fuel additive to be in the motor vehicle diesel fuel additive distribution system which does not comply with the applicable sulfur, cetane, and/or aromatics standards of § 80.521.

§ 80.611 What evidence may be used to determine compliance with the prohibitions and requirements of this subpart and liability for violations of this subpart?

(a) *Compliance with sulfur, cetane, and aromatics standards.* Compliance with the standards in §§ 80.520, 80.521, and 80.522 shall be determined based on the level of the applicable component or parameter, using the sampling methodologies specified in § 80.330(b), as applicable, and the appropriate testing methodologies specified in § 80.580(a)(2) for sulfur, or one of the alternative methodologies for sulfur as approved under § 80.580(a)(3); § 80.2(w) for cetane index; and § 80.2(z) for aromatic content. Any evidence or information, including the exclusive use of such evidence or information, may be used to establish the level of the applicable component or parameter in the diesel fuel or additive, or motor oil to be used in diesel fuel, if the evidence or information is relevant to whether that level would have been in compliance with the standard if the regulatory sampling and testing methodology had been correctly performed. Such evidence may be obtained from any source or location and may include, but is not limited to, test results using methods other than the compliance methods in this paragraph (a), business records, and commercial documents.

(b) *Compliance with other requirements.* Determination of compliance with the requirements of this subpart other than the standards described in paragraph (a) of this section and in §§ 80.520, 80.521, and 80.522, and determination of liability for any violation of this subpart, may be based on information obtained from any source or location. Such information may include, but is not limited to, business records and commercial documents.

§ 80.612 Who is liable for violations of this subpart?

(a) *Persons liable for violations of prohibited acts.*—(1) *Standard, dye, additives, motor oil, and introduction violations.* (i) Any refiner, importer, distributor, reseller, carrier, retailer, or wholesale purchaser-consumer who owned, leased, operated, controlled or supervised a facility where a violation of § 80.610(a) through (d) occurred, or any other person who violates § 80.610(a) through (d), is deemed liable for the applicable violation.

(ii) Any person who causes another person to violate § 80.610(a) through (d) is liable for a violation of § 80.610(e).

(iii) Any refiner, importer, distributor, reseller, carrier, retailer, or wholesale purchaser-consumer who produced, imported, sold, offered for sale, dispensed, supplied, offered to supply, stored, transported, or caused the transportation or storage of, motor vehicle diesel fuel that violates § 80.610(a), is deemed in violation of § 80.610(e).

(iv) Any person who produced, imported, sold, offered for sale, dispensed, supplied, offered to supply, stored, transported, or caused the transportation or storage of a motor vehicle diesel fuel additive which is used in motor vehicle diesel fuel that is found to violate § 80.610(a), is deemed in violation of § 80.610(e).

(2) *Cause violating motor vehicle diesel fuel or additive to be in the distribution system.* Any refiner, importer, distributor, reseller, carrier, retailer, or wholesale purchaser-consumer or any other person who owned, leased, operated, controlled or supervised a facility from which motor vehicle diesel fuel or additive was released into the motor vehicle diesel fuel or additive distribution system which does not comply with the applicable standards or dye requirements of § 80.520 or § 80.521, is deemed in violation of § 80.610(f).

(3) *Branded refiner/importer liability.* Any refiner or importer whose corporate, trade, or brand name, or whose marketing subsidiary's corporate, trade, or brand name appeared at a facility where a violation of § 80.610(a) occurred, is deemed in violation of § 80.610(a).

(4) *Carrier causation.* In order for a motor vehicle diesel fuel or motor vehicle diesel fuel additive carrier to be liable under paragraph (a)(1)(ii), (iii) or (iv) of this section, as applicable, EPA must demonstrate, by reasonably specific showing by direct or circumstantial evidence, that the carrier caused the violation.

(5) *Parent corporation.* Any parent corporation is liable for any violations of this subpart that are committed by any subsidiary.

(6) *Joint venture.* Each partner to a joint venture is jointly and severally liable for any violation of this subpart that occurs at the joint venture facility or is committed by the joint venture operation.

(b) *Persons liable for failure to comply with other provisions ofthis subpart.* Any person who:

(1) Fails to comply with the requirements of a provision of this subpart not addressed in paragraph (a) of this section is liable for a violation of that provision; or

(2) Causes another person to fail to comply with the requirements of a provision of this subpart not addressed in paragraph (a) of this section, is liable for causing a violation of that provision.

§ 80.613 What defenses apply to persons deemed liable for a violation of a prohibited act?

(a) *Presumptive liability defenses.* (1) Any person deemed liable for a violation of a prohibition under § 80.612(a)(1)(i) or (iii), (a)(2), or (a)(3), will not be deemed in violation if the person demonstrates:

(i) The violation was not caused by the person or the person's employee or agent;

(ii) Product transfer documents account for fuel or additive found to be in violation and indicate that the violating product was in compliance with the applicable requirements when it was under the party's control;

(iii) The person conducted a quality assurance sampling and testing program, as described in paragraph (d) of this section, except for those parties subject to the provisions of paragraph (a)(1)(iv) or (v) of this section. A carrier may rely on the quality assurance program carried out by another party, including the party who owns the diesel fuel in question, provided that the quality assurance program is carried out properly. Retailers, wholesale purchaser-consumers, and ultimate consumers of diesel fuel are not required to conduct quality assurance programs;

(iv) For refiners and importers of motor vehicle diesel fuel subject to the 15 ppm standard under § 80.520(a)(1), test results which:

(A) Were conducted according to the test methodology required under § 80.580 (a)(2) or an approved alternative test method under § 80.580(a)(3); and

(B) Establish that, when it left the party's control, the sulfur content of motor vehicle diesel fuel subject to the 15 ppm standard did not exceed 15 ppm; and

(v) For any person who, at a downstream location, blends a diesel fuel additive subject to the requirements of § 80.521(b) into motor vehicle diesel fuel subject to the sulfur standard under § 80.520(a)(1), except a blender who blends additives into fuel trucks at a truck loading rack subject to the provisions of (d)(1) of this section, test results which are conducted subsequent to the blending of the additive into the fuel, and which comply with the requirements of paragraphs (a)(4)(iv)(A) and (B) of this section.

(2) Any party deemed liable for a violation under § 80.612(a)(1)(iv), in regard to a diesel fuel additive subject to the requirements of § 80.521(a), will not be deemed in violation if the person demonstrates that:

(i) Product transfer document(s) account for the additive in the fuel found to be in violation, which comply with the requirements under § 80.591(a), and indicate that the additive was in compliance with the applicable requirements while it was under the party's control; and

(ii) For the additive's manufacturer or importer, test results which accurately establish that, when it left the party's control, the additive in the diesel fuel determined to be in violation did not have a sulfur content in excess of 15 ppm.

(A) Analysis of the additive sulfur content pursuant to this paragraph (a)(2) may be conducted at the time the batch was manufactured or imported, or on a sample of that batch which the manufacturer or importer retains for such purpose for a minimum of two years from the date the batch was manufactured or imported.

(B) After two years from the date the additive batch was manufactured or imported, the additive manufacturer or importer is no longer required to retain samples for the purpose of complying with the testing requirements of this paragraph (a)(2) of this section.

(C) The analysis of the sulfur content of the additive must be conducted pursuant to the requirements of § 80.580(a).

(3) Any person who is deemed liable for a violation under § 80.612 (a)(1)(iv) with regard to a diesel fuel additive subject to the requirements of § 80.521(b), will not be deemed in violation if the person demonstrates that:

(i) The violation was not caused by the party or the party's employee or agent;

(ii) Product transfer document(s) which comply with the additive information requirements under § 80.591 (b), account for the additive in the fuel found to be in violation, and indicate that the additive was in compliance with the applicable requirements while it was under the party's control; and

(iii) For the additive's manufacturer or importer, test results which accurately establish that, when it left the party's control, the additive in the diesel fuel determined to be in violation was in conformity with the information on the additive product transfer document pursuant to the requirements of § 80.591(b). The testing procedures applicable under paragraph (a)(2) of this section, also apply under this paragraph (a)(3).

(b) *Branded refiner defenses.* In the case of a violation found at a facility operating under the corporate, trade or brand name of a refiner or importer, or a refiner's or importer's marketing subsidiary, the refiner or importer must show, in addition to the defense elements required under paragraph (a)(1) of this section, that the violation was caused by:

(1) An act in violation of law (other than the Clean Air Act or this Part 80), or an act of sabotage or vandalism;

(2) The action of any refiner, importer, retailer, distributor, reseller, oxygenate blender, carrier, retailer or wholesale purchaser-consumer in violation of a contractual agreement between the branded refiner or importer and the person designed to prevent such action, and despite periodic sampling and testing by the branded refiner or importer to ensure compliance with such contractual obligation; or

(3) The action of any carrier or other distributor not subject to a contract with the refiner or importer, but engaged for transportation of diesel fuel, despite specifications or inspections of procedures and equipment which are reasonably calculated to prevent such action.

(c) *Causation demonstration.* Under paragraph (a)(1) of this section for any person to show that a violation was not caused by that person, or under paragraph (b) of this section to show that a violation was caused by any of the specified actions, the person must demonstrate by reasonably specific showing, by direct or circumstantial evidence, that the violation was caused or must have been caused by another person and that the person asserting the defense did not contribute to that other person's causation.

(d) *Quality assurance and testing program.* To demonstrate an acceptable quality assurance program under paragraph (a)(1)(iii) of this section, a person must present evidence of the following:

(1) A periodic sampling and testing program to ensure the motor vehicle diesel fuel or additive the person sold, dispensed, supplied, stored, or transported, meets the applicable standards.

(2) For those parties who, at a downstream location, blend diesel fuel additives subject to the requirements of § 80.521(b) into fuel trucks at a truck loading rack, the periodic sampling and testing program required under this paragraph (d) must ensure, by taking into account the greater risk of noncompliance created through use of a high sulfur additive, that the diesel fuel into which the additive was blended meets the applicable standards subsequent to the blending.

(3) On each occasion when motor vehicle diesel fuel or additive is found not in compliance with the applicable standard:

(i) The person immediately ceases selling, offering for sale, dispensing, supplying, offering for supply, storing or transporting the non-complying product; and

(ii) The person promptly remedies the violation and the factors that caused the violation (for example, by removing the non-complying product from the distribution system until the applicable standard is achieved and taking steps to prevent future violations of a similar nature from occurring).

(4) For any carrier who transports motor vehicle diesel fuel or additive in a tank truck, the quality assurance program required under this paragraph (d) need not include its own periodic sampling and testing of the motor vehicle diesel fuel or additive in the tank truck, but in lieu of such tank truck sampling and testing, the carrier shall demonstrate evidence of an oversight program for monitoring compliance with the requirements of this subpart relating to the transport or storage of such product by tank truck, such as appropriate guidance to drivers regarding compliance with the applicable sulfur standard and product transfer document requirements, and the periodic review of records received in the ordinary course of business concerning motor vehicle diesel fuel or additive quality and delivery.

§ 80.614 What penalties apply under this subpart?

(a) Any person liable for a violation under § 80.612 is subject to civil penalties as specified in section 205 of the Clean Air Act for every day of each such violation and the amount of economic benefit or savings resulting from each violation.

(b)(1) Any person liable under § 80.612(a)(1) for a violation of an applicable standard or requirement under § 80.520, or of causing another party to violate such standard or requirement, is subject to a separate day of violation for each and every day the non-complying motor vehicle diesel fuel remains any place in the distribution system.

(2) Any person liable under § 80.612(a)(2) for causing motor vehicle diesel fuel to be in the distribution system which does not comply with an applicable standard or requirement of § 80.520, is subject to a separate day of violation for each and every day that the non-complying motor vehicle diesel fuel remains any place in the motor vehicle diesel fuel distribution system.

(3) Any person liable under § 80.612(a)(1) for blending into motor vehicle diesel fuel an additive violating the applicable sulfur standard pursuant to the requirements of § 80.521(a) or (b), as appropriate, or of causing another party to so blend or add such an additive, is subject to a separate day of violation for each and every day the motor vehicle diesel fuel into which the noncomplying additive was blended, remains any place in the fuel distribution system.

(4) For purposes of this paragraph (b), the length of time the motor vehicle diesel fuel in question remained in the motor vehicle diesel fuel distribution system is deemed to be twenty-five days, unless a person subject to liability or EPA demonstrates by reasonably specific showings, by direct or circumstantial evidence, that the non-complying motor vehicle diesel fuel remained in the distribution system for fewer than or more than twenty-five days.

(c) Any person liable under § 80.612(b) for failure to meet, or causing a failure to meet, a provision of this subpart is liable for a separate day of violation for each and every day such provision remains unfulfilled.

§§ 80.615–80.619 [Reserved]

Provisions for Foreign Refiners and Importers for Motor Vehicle Diesel Fuel Subject to a Temporary Compliance Option or Hardship Provision

§ 80.620 What are the additional requirements for motor vehicle diesel fuel produced by foreign refineries subject to a temporary refiner compliance option or hardship provisions?

(a) *Definitions.* (1) A foreign refinery is a refinery that is located outside the

United States, the Commonwealth of Puerto Rico, the Virgin Islands, Guam, American Samoa, and the Commonwealth of the Northern Mariana Islands (collectively referred to in this section as ''the United States'').

(2) A foreign refiner is a person who meets the definition of refiner under § 80.2(i) for a foreign refinery.

(3) A diesel fuel program foreign refiner (''DFR'') is a foreign refiner that has been approved by EPA for participation in any motor vehicle diesel fuel credits program, motor vehicle diesel fuel temporary compliance option, hardship or GPA provisions of §§ 80.530 through 80.532, § 80.540, § 80.552, § 80.553, § 80.560 or § 80.561 (collectively referred to as ''diesel foreign refiner program'').

(4) ''DFR-Diesel'' means motor vehicle diesel fuel produced at a DFR refinery that is imported into the United States.

(5) ''Non-DFR-Diesel'' means motor vehicle diesel fuel that is produced at a foreign refinery that has not been approved as a DFR foreign refiner, motor vehicle diesel fuel produced at a DFR foreign refinery that is not imported into the United States, and motor vehicle diesel fuel produced at a DFR foreign refinery during a period when the foreign refiner has opted to not participate in the DFR-Diesel diesel foreign refiner program under paragraph (c)(3) of this section.

(6) ''Certified DFR-Diesel'' means DFR-Diesel the foreign refiner intends to include in the foreign refinery's compliance calculations under §§ 80.530 through 80.532, § 80.540, § 80.552, § 80.553, § 80.560 or § 80.561 and does include in these compliance calculations when reported to EPA.

(7) ''Non-Certified DFR-Diesel'' means DFR-Diesel fuel that a DFR foreign refiner imports to the United States that is not Certified DFR-Diesel.

(b) *Baseline.* For any foreign refiner to obtain approval under the diesel foreign refiner program of this subpart for any refinery, it must apply for approval under the applicable provisions of this subpart. To obtain approval the refiner is required, as applicable, to demonstrate a volume baseline for calendar years 1998 and 1999 for motor vehicle diesel fuel produced for use in the United States under §§ 80.595 and 80.596.

(1) The refiner shall follow the procedures, applicable to volume baselines and using motor vehicle diesel fuel instead of gasoline, in §§ 80.91 through 80.93 to establish the volume of motor vehicle diesel fuel that was produced at the refinery and imported into the United States during 1998 and 1999 for purposes of establishing a baseline under §§ 80.595 and 80.596.

(2) In making determinations for foreign refinery baselines EPA will consider all information supplied by a foreign refiner, and in addition may rely on any and all appropriate assumptions necessary to make such determinations.

(3) Where a foreign refiner submits a petition that is incomplete or inadequate to establish an accurate baseline, and the refiner fails to correct this deficiency after a request for more information, EPA will not assign an individual refinery motor vehicle diesel fuel volume baseline.

(c) *General requirements for DFR foreign refiners.* A foreign refiner of a refinery that is approved under the diesel foreign refiner program of this subpart must designate each batch of motor vehicle diesel fuel produced at the foreign refinery that is exported to the United States as either Certified DFR-Diesel or as Non-Certified DFR-Diesel, except as provided in paragraph (c)(3) of this section. It must further designate all Certified DFR-Diesel as complying with either the 15 ppm sulfur standard under § 80.520(a)(1) or the 500 ppm sulfur standard under § 80.520(c).

(1) In the case of Certified DFR-Diesel, the foreign refiner must meet all requirements that apply to refiners under this subpart, except that:

(i) For purposes of complying with the compliance option requirements of § 80.530, motor vehicle diesel fuel produced by a foreign refinery must comply separately for each Credit Trading Area of import, as defined in § 80.531(a)(5).

(ii) For purposes of complying with the compliance option requirements of § 80.530, credits obtained from any other refinery or from any importer must have been generated in the same Credit Trading Area as the Credit Trading Area of import of the fuel for which credits are needed to achieve compliance.

(iii) For purposes of generating credits under this subpart, credits shall be generated separately by Credit Trading Area of import and shall be designated by Credit Trading Area of importation and by port of importation.

(2) In the case of Non-Certified DFR-Diesel, the foreign refiner shall meet all the following requirements:

(i) The designation requirements in this section.

(ii) The reporting requirements in this section and § 80.593.

(iii) The product transfer document requirements in this section.

(iv) The prohibitions in this section and § 80.610.

(3)(i) Any foreign refiner that has been approved to produce motor vehicle diesel fuel subject to the diesel foreign refiner program for a foreign refinery under this subpart may elect to classify no diesel fuel imported into the United States as DFR-Diesel provided the foreign refiner notifies EPA of the election no later than November 1 of the prior calendar year.

(ii) An election under paragraph (c)(3)(i) of this section shall be for an entire calendar year and apply to all motor vehicle diesel fuel that is produced by the foreign refinery that is imported into the United States, and shall remain in effect for each succeeding year unless and until the foreign refiner notifies EPA of the termination of the election. The change in election shall take effect at the beginning of the next calendar year.

(d) *Designation, product transfer documents, and foreign refiner certification.* (1) Any foreign refiner of a foreign refinery that has been approved by EPA to produce motor vehicle diesel fuel subject to the diesel foreign refiner program must designate each batch of DFR-Diesel as such at the time the diesel fuel is produced, unless the refiner has elected to classify no diesel fuel exported to the United States as DFR-Diesel under paragraph (c)(3) of this section.

(2) On each occasion when any person transfers custody or title to any DFR-Diesel prior to its being imported into the United States, it must include the following information as part of the product transfer document information in this section:

(i) Identification of the diesel fuel as Certified DFR-Diesel or as Non-Certified DFR-Diesel, and if it is Certified DFR-Diesel, further designation as meeting the 500 ppm sulfur standard under § 80.520(c) or the 15 ppm sulfur standard under § 80.520(a)(1) pursuant to § 80.523; and

(ii) The name and EPA refinery registration number (under § 80.593) of the refinery where the DFR-Diesel was produced.

(3) On each occasion when DFR-Diesel is loaded onto a vessel or other transportation mode for transport to the United States, the foreign refiner shall prepare a certification for each batch of the DFR-Diesel that meets the following requirements.

(i) The certification shall include the report of the independent third party under paragraph (f) of this section, and the following additional information:

(A) The name and EPA registration number of the refinery that produced the DFR-Diesel;

(B) The identification of the diesel fuel as Certified DFR-Diesel or Non-Certified DFR-Diesel;

(C) The volume of DFR-Diesel being transported, in gallons;

(D) In the case of Certified DFR-Diesel:

(*1*) The sulfur content as determined under paragraph (f) of this section, and the designation of the fuel as complying with the 15 ppm sulfur content standard for motor vehicle diesel fuel under § 80.520(a)(1) or the 500 ppm sulfur content standard for motor vehicle diesel fuel under § 80.520(c); and

(*2*) A declaration that the DFR-Diesel is being included in the applicable compliance calculations required by the EPA under this subpart.

(ii) The certification shall be made part of the product transfer documents for the DFR-Diesel.

(e) *Transfers of DFR-Diesel to non-United States markets.* The foreign refiner is responsible to ensure that all diesel fuel classified as DFR-Diesel is imported into the United States. A foreign refiner may remove the DFR-Diesel classification, and the diesel fuel need not be imported into the United States, but only if:

(1)(i) The foreign refiner excludes:

(A) The volume of diesel from the refinery's compliance report under § 80.593; and

(B) In the case of Certified DFR-Diesel, the volume of the diesel fuel from the compliance report under § 80.593.

(ii) The exclusions under paragraph (e)(1)(i) of this section shall be on the basis of the designations under § 80.523 and volumes determined under paragraph (f) of this section.

(2) The foreign refiner obtains sufficient evidence in the form of documentation that the diesel fuel was not imported into the United States.

(f) *Load port independent sampling, testing and refinery identification.* (1) On each occasion that DFR-Diesel is loaded onto a vessel for transport to the United States a foreign refiner shall have an independent third party:

(i) Inspect the vessel prior to loading and determine the volume of any tank bottoms;

(ii) Determine the volume of DFR-Diesel loaded onto the vessel (exclusive of any tank bottoms before loading);

(iii) Obtain the EPA-assigned registration number of the foreign refinery;

(iv) Determine the name and country of registration of the vessel used to transport the DFR-Diesel to the United States; and

(v) Determine the date and time the vessel departs the port serving the foreign refinery.

(2) On each occasion that Certified DFR-Diesel is loaded onto a vessel for transport to the United States a foreign refiner shall have an independent third party:

(i) Collect a representative sample of the Certified DFR-Diesel from each vessel compartment subsequent to loading on the vessel and prior to departure of the vessel from the port serving the foreign refinery;

(ii) Determine the sulfur content value for each compartment using the methodology specified in § 80.580 by:

(A) The third party analyzing each sample; or

(B) The third party observing the foreign refiner analyze the sample;

(iii) Review original documents that reflect movement and storage of the certified DFR-Diesel from the refinery to the load port, and from this review determine:

(A) The refinery at which the DFR-Diesel was produced; and

(B) That the DFR-Diesel remained segregated from:

(*1*) Non-DFR-Diesel and Non-Certified DFR-Diesel; and

(*2*) Other Certified DFR-Diesel produced at a different refinery.

(3) The independent third party shall submit a report:

(i) To the foreign refiner containing the information required under paragraphs (f)(1) and (f)(2) of this section, to accompany the product transfer documents for the vessel; and

(ii) To the Administrator containing the information required under paragraphs (f)(1) and (f)(2) of this section, within thirty days following the date of the independent third party's inspection. This report shall include a description of the method used to determine the identity of the refinery at which the diesel fuel was produced, assurance that the diesel fuel remained segregated as specified in paragraph (n)(1) of this section, and a description of the diesel fuel's movement and storage between production at the source refinery and vessel loading.

(4) The independent third party must:

(i) Be approved in advance by EPA, based on a demonstration of ability to perform the procedures required in this paragraph (f);

(ii) Be independent under the criteria specified in § 80.65(e)(2)(iii); and

(iii) Sign a commitment that contains the provisions specified in paragraph (i) of this section with regard to activities, facilities and documents relevant to compliance with the requirements of this paragraph (f).

(g) *Comparison of load port and port of entry testing.* (1) Load port and port of entry testing requirements, as follows:

(i) Any foreign refiner and any United States importer of Certified DFR-Diesel shall compare the results from the load port testing under paragraph (f) of this section, with the port of entry testing as reported under paragraph (o) of this section, for the volume of diesel and the sulfur value; except that

(ii) Where a vessel transporting Certified DFR-Diesel off loads this diesel fuel at more than one United States port of entry, and the conditions of paragraph (g)(2)(i) of this section are met at the first United States port of entry, the requirements of paragraph (g)(2) of this section do not apply at subsequent ports of entry if the United States importer obtains a certification from the vessel owner that meets the requirements of paragraph(s) of this section, that the vessel has not loaded any diesel fuel or blendstock between the first United States port of entry and the subsequent port of entry.

(2)(i) The requirements of this paragraph (g)(2) apply if:

(A) The temperature-corrected volumes determined at the port of entry and at the load port differ by more than one percent; or

(B) The sulfur value determined at the port of entry is higher than the sulfur value determined at the load port, and the amount of this difference is greater than the reproducibility amount specified for the port of entry test result by the American Society of Testing and Materials (ASTM).

(ii) The United States importer and the foreign refiner shall treat the diesel fuel as Non-Certified DFR-Diesel, and the foreign refiner shall exclude the diesel fuel volume from its motor vehicle diesel fuel volumes calculations and sulfur standard designations under § 80.523.

(h) *Attest requirements.* Refiners, for each calendar year, must arrange to have an attest engagement performed of the underlying documentation that forms the basis of any report required under this subpart. The attest engagement must comply with the procedures and requirements that apply to refiners under §§ 80.125 through 80.130 and must be submitted to the Administrator of EPA by May 30 of each year for the prior calendar year. The following additional procedures shall be carried out for any foreign refiner of DFR-Diesel:

(1) The inventory reconciliation analysis under § 80.128(b) and the tender analysis under § 80.128(c) shall include Non-DFR-Diesel.

(2) Obtain separate listings of all tenders of Certified DFR-Diesel and of Non-Certified DFR-Diesel, and obtain separate listings of Certified DFR-Diesel

based on whether it is 15 ppm sulfur content motor vehicle diesel fuel or 500 ppm sulfur content motor vehicle diesel fuel. Agree the total volume of tenders from the listings to the diesel fuel inventory reconciliation analysis in § 80.128(b), and to the volumes determined by the third party under paragraph (f)(1) of this section.

(3) For each tender under paragraph (h)(2) of this section, where the diesel fuel is loaded onto a marine vessel, report as a finding the name and country of registration of each vessel, and the volumes of DFR-Diesel loaded onto each vessel.

(4) Select a sample from the list of vessels identified in paragraph (h)(3) of this section used to transport Certified DFR-Diesel, in accordance with the guidelines in § 80.127, and for each vessel selected perform the following:

(i) Obtain the report of the independent third party, under paragraph (f) of this section, and of the United States importer under paragraph (o) of this section.

(A) Agree the information in these reports with regard to vessel identification, diesel fuel volumes and sulfur content test results.

(B) Identify, and report as a finding, each occasion the load port and port of entry sulfur content and volume results differ by more than the amounts allowed in paragraph (g) of this section, and determine whether the foreign refiner adjusted its refinery calculations as required in paragraph (g) of this section.

(ii) Obtain the documents used by the independent third party to determine transportation and storage of the Certified DFR-Diesel from the refinery to the load port, under paragraph (f) of this section. Obtain tank activity records for any storage tank where the Certified DFR-Diesel is stored, and pipeline activity records for any pipeline used to transport the Certified DFR-Diesel, prior to being loaded onto the vessel. Use these records to determine whether the Certified DFR-Diesel was produced at the refinery that is the subject of the attest engagement, and whether the Certified DFR-Diesel was mixed with any Non-Certified DFR-Diesel, Non-DFR-Diesel, or any Certified DFR-Diesel produced at a different refinery.

(5) Select a sample from the list of vessels identified in paragraph (h)(3) of this section used to transport certified and Non-Certified DFR-Diesel, in accordance with the guidelines in § 80.127, and for each vessel selected perform the following:

(i) Obtain a commercial document of general circulation that lists vessel arrivals and departures, and that includes the port and date of departure of the vessel, and the port of entry and date of arrival of the vessel.

(ii) Agree the vessel's departure and arrival locations and dates from the independent third party and United States importer reports to the information contained in the commercial document.

(6) Obtain separate listings of all tenders of Non-DFR-Diesel, and perform the following:

(i) Agree the total volume and sulfur content of tenders from the listings to the diesel fuel inventory reconciliation analysis in § 80.128(b).

(ii) Obtain a separate listing of the tenders under this paragraph (h)(6) where the diesel fuel is loaded onto a marine vessel. Select a sample from this listing in accordance with the guidelines in § 80.127, and obtain a commercial document of general circulation that lists vessel arrivals and departures, and that includes the port and date of departure and the ports and dates where the diesel fuel was off loaded for the selected vessels. Determine and report as a finding the country where the diesel fuel was off loaded for each vessel selected.

(7) In order to complete the requirements of this paragraph (h) an auditor shall:

(i) Be independent of the foreign refiner;

(ii) Be licensed as a Certified Public Accountant in the United States and a citizen of the United States, or be approved in advance by EPA based on a demonstration of ability to perform the procedures required in §§ 80.125 through 80.130 and this paragraph (h); and

(iii) Sign a commitment that contains the provisions specified in paragraph (i) of this section with regard to activities and documents relevant to compliance with the requirements of §§ 80.125 through 80.130 and this paragraph (h).

(i) *Foreign refiner commitments.* Any foreign refiner shall commit to and comply with the provisions contained in this paragraph (i) as a condition to being approved for a temporary refiner diesel fuel program option.

(1) Any United States Environmental Protection Agency inspector or auditor must be given full, complete and immediate access to conduct inspections and audits of the foreign refinery.

(i) Inspections and audits may be either announced in advance by EPA, or unannounced.

(ii) Access will be provided to any location where:

(A) Diesel fuel is produced;

(B) Documents related to refinery operations are kept;

(C) Diesel fuel or blendstock samples are tested or stored; and

(D) DFR-Diesel is stored or transported between the foreign refinery and the United States, including storage tanks, vessels and pipelines.

(iii) Inspections and audits may be by EPA employees or contractors to EPA.

(iv) Any documents requested that are related to matters covered by inspections and audits must be provided to an EPA inspector or auditor on request.

(v) Inspections and audits by EPA may include review and copying of any documents related to:

(A) Refinery baseline establishment, if applicable, including the volume and sulfur content; transfers of title or custody of any diesel fuel or blendstocks whether DFR-Diesel or Non-DFR-Diesel, produced at the foreign refinery during the period January 1, 1998 through the date of the refinery baseline petition or through the date of the inspection or audit if a baseline petition has not been approved, and any work papers related to refinery baseline establishment;

(B) The volume and sulfur content of DFR-Diesel;

(C) The proper classification of diesel fuel as being DFR-Diesel or as not being DFR-Diesel, or as Certified DFR-Diesel or as Non-Certified DFR-Diesel, or as meeting the 15 ppm sulfur standard under § 80.520(a)(1) or the 500 ppm sulfur standard under § 80.520(c);

(D) Transfers of title or custody to DFR-Diesel;

(E) Sampling and testing of DFR-Diesel;

(F) Work performed and reports prepared by independent third parties and by independent auditors under the requirements of this section, including work papers; and

(G) Reports prepared for submission to EPA, and any work papers related to such reports.

(vi) Inspections and audits by EPA may include taking samples of diesel fuel, diesel fuel additives or blendstock, and interviewing employees.

(vii) Any employee of the foreign refiner must be made available for interview by the EPA inspector or auditor, on request, within a reasonable time period.

(viii) English language translations of any documents must be provided to an EPA inspector or auditor, on request, within 10 working days.

(ix) English language interpreters must be provided to accompany EPA inspectors and auditors, on request.

(2) An agent for service of process located in the District of Columbia shall

be named, and service on this agent constitutes service on the foreign refiner or any employee of the foreign refiner for any action by EPA or otherwise by the United States related to the requirements of this subpart.

(3) The forum for any civil or criminal enforcement action related to the provisions of this section for violations of the Clean Air Act or regulations promulgated thereunder shall be governed by the Clean Air Act, including the EPA administrative forum where allowed under the Clean Air Act.

(4) United States substantive and procedural laws shall apply to any civil or criminal enforcement action against the foreign refiner or any employee of the foreign refiner related to the provisions of this section.

(5) Submitting a petition for participation in the diesel foreign refiner program or producing and exporting diesel fuel under any such program, and all other actions to comply with the requirements of this subpart relating to participation in any diesel foreign refiner program, or to establish an individual refinery motor vehicle diesel fuel volume baseline (if applicable) constitute actions or activities that satisfy the provisions of 28 U.S.C. section 1605(a)(2), but solely with respect to actions instituted against the foreign refiner, its agents and employees in any court or other tribunal in the United States for conduct that violates the requirements applicable to the foreign refiner under this subpart, including conduct that violates Title 18 U.S.C. section 1001 and Clean Air Act section 113(c)(2).

(6) The foreign refiner, or its agents or employees, will not seek to detain or to impose civil or criminal remedies against EPA inspectors or auditors, whether EPA employees or EPA contractors, for actions performed within the scope of EPA employment related to the provisions of this section.

(7) The commitment required by this paragraph (i) shall be signed by the owner or president of the foreign refiner business.

(8) In any case where DFR-Diesel produced at a foreign refinery is stored or transported by another company between the refinery and the vessel that transports the DFR-Diesel to the United States, the foreign refiner shall obtain from each such other company a commitment that meets the requirements specified in paragraphs (i)(1) through (7) of this section, and these commitments shall be included in the foreign refiner's petition to participate in any diesel foreign refiner program .

(j) *Sovereign immunity.* By submitting a petition for participation in any diesel foreign refiner program under this subpart (and baseline, if applicable) under this section, or by producing and exporting diesel fuel to the United States under any such program, the foreign refiner, and its agents and employees, without exception, become subject to the full operation of the administrative and judicial enforcement powers and provisions of the United States without limitation based on sovereign immunity, with respect to actions instituted against the foreign refiner, its agents and employees in any court or other tribunal in the United States for conduct that violates the requirements applicable to the foreign refiner under this subpart including conduct that violates Title 18 U.S.C. section 1001 and Clean Air Act section 113(c)(2).

(k) *Bond posting.* Any foreign refiner shall meet the requirements of this paragraph (k) as a condition to approval for any diesel foreign refiner program under this subpart.

(1) The foreign refiner shall post a bond of the amount calculated using the following equation: $\text{Bond} = G \times \$0.01$

Where:

Bond = amount of the bond in U.S. dollars.

G = the volume baseline for motor vehicle diesel fuel produced at the foreign refinery and exported to the United States, in gallons.

(2) Bonds shall be posted by:

(i) Paying the amount of the bond to the Treasurer of the United States;

(ii) Obtaining a bond in the proper amount from a third party surety agent that is payable to satisfy United States administrative or judicial judgments against the foreign refiner, provided EPA agrees in advance as to the third party and the nature of the surety agreement; or

(iii) An alternative commitment that results in assets of an appropriate liquidity and value being readily available to the United States, provided EPA agrees in advance as to the alternative commitment.

(3) Bonds posted under this paragraph (k) shall:

(i) Be used to satisfy any judicial judgment that results from an administrative or judicial enforcement action for conduct in violation of this subpart, including where such conduct violates Title 18 U.S.C. 1001 and Clean Air Act section 113(c)(2);

(ii) Be provided by a corporate surety that is listed in the United States Department of Treasury Circular 570 ''Companies Holding Certificates of Authority as Acceptable Sureties on Federal Bonds'' (available from the Department of Treasury website at *http://www.fms.treas.gov* or from the Government Printing Office, phone (202) 512–1800); and

(iii) Include a commitment that the bond will remain in effect for at least five (5) years following the end of latest annual reporting period that the foreign refiner produces motor vehicle diesel fuel pursuant to the requirements of this subpart.

(4) On any occasion a foreign refiner bond is used to satisfy any judgment, the foreign refiner shall increase the bond to cover the amount used within 90 days of the date the bond is used.

(5) If the bond amount for a foreign refiner increases, the foreign refiner shall increase the bond to cover the shortfall within 90 days of the date the bond amount changes. If the bond amount decreases, the foreign refiner may reduce the amount of the bond beginning 90 days after the date the bond amount changes.

(l) [Reserved]

(m) *English language reports.* Any report or other document submitted to EPA by a foreign refiner shall be in English language, or shall include an English language translation.

(n) *Prohibitions.* (1) No person may combine Certified DFR-Diesel with any Non-Certified DFR-Diesel or Non-DFR-Diesel, and no person may combine Certified DFR-Diesel with any Certified DFR-Diesel produced at a different refinery, until the importer has met all the requirements of paragraph (o) of this section, except as provided in paragraph (e) of this section.

(2) No foreign refiner or other person may cause another person to commit an action prohibited in paragraph (n)(1) of this section, or that otherwise violates the requirements of this section.

(o) *United States importer requirements.* Any United States importer shall meet the following requirements:

(1) Each batch of imported motor vehicle diesel fuel shall be classified by the importer as being DFR-Diesel or as Non-DFR-Diesel, and each batch classified as DFR-Diesel shall be further classified as Certified DFR-Diesel or as Non-certified DFR-Diesel, and each batch of Certified DFR-Diesel shall be further classified as complying with the 500 ppm motor vehicle diesel fuel sulfur standard under § 80.520(c) or the 15 ppm motor vehicle diesel fuel sulfur standard under § 80.520(a)(1).

(2) Motor vehicle diesel fuel shall be classified as Certified DFR-Diesel or as Non-Certified DFR-Diesel according to the designation by the foreign refiner if this designation is supported by product

transfer documents prepared by the foreign refiner as required in paragraph (d) of this section, unless the diesel fuel is classified as Non-Certified DFR-Diesel under paragraph (g) of this section. Additionally, the importer shall comply with all requirements of this subpart applicable to domestic refiners subject to any diesel foreign refiner program under this subpart.

(3) For each diesel fuel batch classified as DFR-Diesel, any United States importer shall perform the following procedures:

(i) In the case of both Certified and Non-Certified DFR-Diesel, have an independent third party:

(A) Determine the volume of diesel fuel in the vessel;

(B) Use the foreign refiner's DFR-Diesel certification to determine the name and EPA-assigned registration number of the foreign refinery that produced the DFR-Diesel;

(C) Determine the name and country of registration of the vessel used to transport the DFR-Diesel to the United States; and

(D) Determine the date and time the vessel arrives at the United States port of entry.

(ii) In the case of Certified DFR-Diesel, have an independent third party:

(A) Collect a representative sample from each vessel compartment subsequent to the vessel's arrival at the United States port of entry and prior to off loading any diesel fuel from the vessel;

(B) Obtain the compartment samples; and

(C) Determine the sulfur value of each compartment sample using the methodologies specified in § 80.580, by:

(*1*) The third party analyzing the sample; or

(*2*) The third party observing the importer analyze the sample.

(4) Any importer shall submit reports within thirty days following the date any vessel transporting DFR-Diesel arrives at the United States port of entry:

(i) To the Administrator containing the information determined under paragraph (o)(3) of this section; and

(ii) To the foreign refiner containing the information determined under paragraph (o)(3)(ii) of this section, and including identification of the port and Credit Trading Area at which the product was offloaded.

(5) Any United States importer shall meet the requirements specified in § 80.520, for any imported motor vehicle diesel fuel that is not classified as Certified DFR-Diesel under paragraph (o)(2) of this section.

(p) *Truck Imports of Certified DFR-Diesel produced at a Foreign Refinery.* (1) Any refiner whose Certified DFR-Diesel is transported into the United States by truck may petition EPA to use alternative procedures to meet the following requirements:

(i) Certification under paragraph (d)(5) of this section;

(ii) Load port and port of entry sampling and testing under paragraphs (f) and (g) of this section;

(iii) Attest under paragraph (h) of this section; and

(iv) Importer testing under paragraph (o)(3) of this section.

(2) These alternative procedures must ensure Certified DFR-Diesel remains segregated from Non-Certified DFR-Diesel and from Non-DFR-Diesel until it is imported into the United States. The petition will be evaluated based on whether it adequately addresses the following:

(i) Provisions for monitoring pipeline shipments, if applicable, from the refinery, that ensure segregation of Certified DFR-Diesel from that refinery from all other diesel fuel;

(ii) Contracts with any terminals and/or pipelines that receive and/or transport Certified DFR-Diesel, that prohibit the commingling of Certified DFR-Diesel with any of the following:

(A) Other Certified DFR-Diesel from other refineries.

(B) All Non-Certified DFR-Diesel.

(C) All Non-DFR-Diesel;

(iii) Procedures for obtaining and reviewing truck loading records and United States import documents for Certified DFR-Diesel to ensure that such diesel fuel is only loaded into trucks making deliveries to the United States;

(iv) Attest procedures to be conducted annually by an independent third party that review loading records and import documents based on volume reconciliation, or other criteria, to confirm that all Certified DFR-Diesel remains segregated throughout the distribution system and is only loaded into trucks for import into the United States.

(3) The petition required by this section must be submitted to EPA along with the application for temporary refiner relief individual refinery highway diesel sulfur standard under this subpart I and this section.

(q) *Withdrawal or suspension of a foreign refinery's temporary refinery flexibility program approval.* EPA may withdraw or suspend a diesel refiner temporary compliance option diesel fuel sulfur program approval for a foreign refinery where:

(1) A foreign refiner fails to meet any requirement of this section;

(2) A foreign government fails to allow EPA inspections as provided in paragraph (i)(1) of this section;

(3) A foreign refiner asserts a claim of, or a right to claim, sovereign immunity in an action to enforce the requirements in this subpart; or

(4) A foreign refiner fails to pay a civil or criminal penalty that is not satisfied using the foreign refiner bond specified in paragraph (k) of this section.

(r) *Early use of a foreign refiner baseline.* (1) A foreign refiner may begin using an individual refinery baseline before EPA has approved the baseline, provided that:

(i) A baseline petition has been submitted as required in paragraph (b) of this section;

(ii) EPA has made a provisional finding that the baseline petition is complete;

(iii) The foreign refiner has made the commitments required in paragraph (i) of this section;

(iv) The persons who will meet the independent third party and independent attest requirements for the foreign refinery have made the commitments required in paragraphs (f)(3)(iii) and (h)(7)(iii) of this section; and

(v) The foreign refiner has met the bond requirements of paragraph (k) of this section.

(2) In any case where a foreign refiner uses an individual refinery baseline before final approval under paragraph (r)(1) of this section, and the foreign refinery baseline values that ultimately are approved by EPA are more stringent than the early baseline values used by the foreign refiner, the foreign refiner shall recalculate its compliance, ab initio, using the baseline values approved by the EPA, and the foreign refiner shall be liable for any resulting violation of the motor vehicle highway diesel fuel requirements.

(s) *Additional requirements for petitions, reports and certificates.* Any petition for approval to produce motor vehicle diesel fuel subject to the diesel foreign refiner program, any alternative procedures under paragraph (p) of this section, any report or other submission required by paragraph (c), (f)(2), or (i) of this section, and any certification under paragraph (d)(3) of this section shall be:

(1) Submitted in accordance with procedures specified by the Administrator, including use of any forms that may be specified by the Administrator.

(2) Be signed by the president or owner of the foreign refiner company, or by that person's immediate designee, and shall contain the following declaration:

I hereby certify: (1) that I have actual authority to sign on behalf of and to bind

[insert name of foreign refiner] with regard to all statements contained herein; (2) that I am aware that the information contained herein is being certified, or submitted to the United States Environmental Protection Agency, under the requirements of 40 CFR Part 80, subpart I, and that the information is material for determining compliance under these regulations; and (3) that I have read and understand the information being certified or submitted, and this information is true, complete and correct to the best of my knowledge and belief after I have taken reasonable and appropriate steps to verify the accuracy thereof.

I affirm that I have read and understand the provisions of 40 CFR Part 80, subpart I, including 40 CFR 80.620 apply to [insert name of foreign refiner]. Pursuant to Clean Air Act section 113(c) and Title 18, United States Code, section 1001, the penalty for furnishing false, incomplete or misleading information in this certification or submission is a fine of up to $10,000 U.S., and/or imprisonment for up to five years.

PART 86—CONTROL OF EMISSIONS FROM NEW AND IN-USE HIGHWAY VEHICLES AND ENGINES

11. The authority citation for part 86 continues to read as follows:

Authority: 42 U.S.C. 7401–7671q.

12. Section 86.1 is amended by revising paragraph (b)(1) to read as follows:

§ 86.1 Reference materials.

* * * * *

(b) * * *

(1) *ASTM material.* The following table sets forth material from the American Society for Testing and Materials that has been incorporated by reference. The first column lists the number and name of the material. The second column lists the section(s) of this part, other than this section, in which the matter is referenced. Copies of these materials may be obtained from American Society for Testing and Materials, 100 Barr Harbor Drive, West Conshohocken, PA 19428–2959.

Document number and name	40 CFR part 86 reference
ASTM E29–67 (Reapproved 1980), Standard Recommended Practice for Indicating Which Places of Figures Are To Be Considered Significant in Specified Limiting Values.	86.1105–87.
ASTM E29–90, Standard Practice for Using Significant Digits in Test Data to Determine Conformance with Specifications.	86.609–84; 86.609–96; 86.609–97; 86.609–98; 86.1009–84; 86.1009–96; 86.1442; 86.1708–99; 86.1709–99; 86.1710–99; 86.1728–99.
ASTM D5186–91, Standard Test Method for Determination of Aromatic Content of Diesel Fuels by Supercritical Fluid Chromatography.	86.113–07; 86.1313–91; 86.1313–94; 86.1313–98; 1313–2007.
ASTM D2163–91, Standard Test Method for Analysis of Liquefied Petroleum (LP) Gases and Propane Concentrates by Gas Chromatography.	86.113–94; 86.1213–94; 86.1313–94.
ASTM D1945–91, Standard Test Method for Analysis of Natural Gas By Gas Chromatography	86.113–94; 86.513–94; 86.1213–94; 86.1313–94.
ASTM E29–93a, Standard Practice for Using Significant Digits in Test Data to Determine Conformance with Specifications.	86.098–15; 86.004–15; 86.007–11; 86.007–15; 86.1803–01; 86.1823–01; 86.1824–01; 86.1825–01; 86.1837–01.
ASTM D2986–95a, (Reapproved 1999) Standard Practice for Evaluation of Air Assay Media by the Monodisperse DOP (Dioctyl Phthalate) Smoke Test.	86.1310–2007.
ASTM F1471–93, Standard Test Method for Air Cleaning Performance of a High-Efficiency Particulate Air-Filter System.	86.1310–2007.

* * * * *

13. Section 86.004–2 is amended by adding in alphabetical order a definition of ''U.S.-directed production'' to read as follows:

§ 86.004–2 Definitions.

* * * * *

U.S.-directed production means the engines and/or vehicles (as applicable) produced by a manufacturer for which the manufacturer has reasonable assurance that sale was or will be made to ultimate purchasers in the United States, excluding engines and/or vehicles that are certified to state emission standards different than the emission standards in this part.

* * * * *

14. Section 86.004–28 is amended by adding paragraph (i) to read as follows:

§ 86.004–28 Compliance with emission standards.

* * * * *

(i) Emission results from heavy-duty engines equipped with exhaust aftertreatment may need to be adjusted to account for regeneration events. This provision only applies for engines equipped with emission controls that are regenerated on an infrequent basis. For the purpose of this paragraph (i), the term ''regeneration'' means an event during which emissions levels change while the aftertreatment performance is being restored by design. Examples of regenerations are increasing exhaust gas temperature to remove sulfur from an adsorber or increasing exhaust gas temperature to oxidize PM in a trap. For the purpose of this paragraph (i), the term ''infrequent'' means having an expected frequency of less than once per transient test cycle. Calculation and use of adjustment factors are described in paragraphs (i)(1) through (i)(5) of this section.

(1) *Development of adjustment factors.* Manufacturers must develop separate pairs of adjustment factors (an upward adjustment factor and a downward adjustment factor) for each pollutant based on measured emission data and observed regeneration frequency. Adjustment factors may be carried-over to subsequent model years or carried-across to other engine families only where the Administrator determines that such carry-over or carry-across is consistent with good engineering judgment. Adjustment factors should generally apply to an entire engine family, but manufacturers may develop separate adjustment factors for different engine configurations within an engine family. All adjustment factors for regeneration are additive.

(2) *Calculation of adjustment factors.* The adjustment factors are calculated from the following parameters: the measured emissions from a test in which the regeneration occurs (EF_H), the measured emissions from a test in which the regeneration does not occur (EF_L), and the frequency of the regeneration event in terms of fraction of tests during which the regeneration occurs (F). The average emission rate (EF_A) is calculated as:

$$EF_A = (F)(EF_H) + (1 - F)(EF_L)$$

(i) The upward adjustment factor (UAF) is calculated as: $UAF = EF_A - EF_L$.

(ii) The downward adjustment factor (DAF) is calculated as: $DAF = EF_A - EF_H$.

(3) *Use of adjustment factors.* Upward adjustment factors are added to

measured emission rates for all tests in which the regeneration does not occur. Downward adjustment factors are added to measured emission rates for all tests in which the regeneration occurs. The occurrence of the regeneration must be identified in a manner that is readily apparent during all testing. Where no regeneration is identified, the upward adjustment factor shall be applied.

(4) *Sample calculation.* If EF_L is 0.10 g/bhp-hr, EF_H is 0.50 g/bhp-hr, and F is 0.1 (*i.e.*, the regeneration occurs once for each ten tests), then:

EF_A = (0.1)(0.5 g/bhp-hr) + (1.0 − 0.1)(0.1 g/bhp-hr) = 0.14 g/bhp-hr

UAF = 0.14 g/bhp-hr − 0.10 g/bhp-hr = 0.04 g/bhp-hr

DAF = 0.14 g/bhp-hr − 0.50 g/bhp-hr = −0.36 g/bhp-hr

(5) *Options.* (i) A manufacturer may elect to omit adjustment factors for one or more of its engine families (or configurations) because the effect of the regeneration is small, or because it is not practical to identify when regenerations occur. In these cases, no upward or downward adjustment factor shall be added, and the manufacturer is liable for compliance with the emission standards for all tests, without regard to whether a regeneration occurs.

(ii) Upon request by the manufacturer, the Administrator may account for regeneration events differently than is provided in this paragraph (i). However, this option only applies for events that occur extremely infrequently, and which cannot be practically addressed using the adjustment factors described in this paragraph (i).

15. Section 86.004–40 is amended by revising the introductory text to read as follows:

§ 86.004–40 Heavy-duty engine rebuilding practices.

The provisions of this section are applicable to heavy-duty engines subject to model year 2004 or later standards and are applicable to the process of engine rebuilding (or rebuilding a portion of an engine or engine system). The process of engine rebuilding generally includes disassembly, replacement of multiple parts due to wear, and reassembly, and also may include the removal of the engine from the vehicle and other acts associated with rebuilding an engine. Any deviation from the provisions contained in this section is a prohibited act under section 203(a)(3) of the Clean Air Act (42 U.S.C. 7522(a)(3)).

* * * * *

16. Section 86.005–10 is amended by revising paragraph (a)(1)(ii)(C) to read as follows:

§ 86.005–10 Emission standards for 2005 and later model year Otto-cycle heavy-duty engines and vehicles.

* * * * *

(a) * * *

(1) * * *

(ii) * * *

(C) *Idle carbon monoxide.* For all Otto-cycle HDEs utilizing aftertreatment technology, and not certified to the onboard diagnostics requirements of § 86.005–17: 0.50 percent of exhaust gas flow at curb idle.

* * * * *

17. Section 86.005–17 is amended by revising paragraphs (b) introductory text, (b)(1), (b)(2), (b)(3), (b)(4), (b)(5), and (k) to read as follows:

§ 86.005–17 On-board diagnostics.

* * * * *

(b) *Malfunction descriptions.* The OBD system must detect and identify malfunctions in all monitored emission-related engine systems or components according to the following malfunction definitions as measured and calculated in accordance with test procedures set forth in subpart N of this part (engine-based test procedures) excluding the test procedure referred to as the ''Supplemental emission test; test cycle and procedures'' contained in § 86.1360, and excluding the test procedure referred to as the ''Not-To-Exceed Test Procedure'' contained in § 86.1370, and excluding the test procedure referred to as the ''Load Response Test'' contained in § 86.1380.

(1) *Catalysts and particulate traps.* (i) *Otto-cycle.* Catalyst deterioration or malfunction before it results in an increase in NMHC (or NO_X+NMHC, as applicable) emissions 1.5 times the NMHC (or NO_X+NMHC, as applicable) standard or FEL, as compared to the NMHC (or NO_X+NMHC, as applicable) emission level measured using a representative 4000 mile catalyst system.

(ii) *Diesel.* (A) If equipped, catalyst deterioration or malfunction before it results in exhaust emissions exceeding 1.5 times the applicable standard or FEL for NO_X (or NO_X+NMHC, as applicable) or PM. This requirement applies only to reduction catalysts; monitoring of oxidation catalysts is not required. This monitoring need not be done if the manufacturer can demonstrate that deterioration or malfunction of the system will not result in exceedance of the threshold.

(B) If equipped with a particulate trap, catastrophic failure of the device must be detected. Any particulate trap whose complete failure results in exhaust emissions exceeding 1.5 times the applicable standard or FEL for NMHC (or NO_X+NMHC, as applicable) or PM must be monitored for such catastrophic failure. This monitoring need not be done if the manufacturer can demonstrate that a catastrophic failure of the system will not result in exceedance of the threshold.

(2) *Engine Misfire.* (i) *Otto-cycle.* Engine misfire resulting in exhaust emissions exceeding 1.5 times the applicable standard or FEL for NMHC, NO_X (or NO_X+NMHC, as applicable) or CO; and any misfire capable of damaging the catalytic converter.

(ii) *Diesel.* Lack of cylinder combustion must be detected.

(3) Oxygen sensors. If equipped, oxygen sensor deterioration or malfunction resulting in exhaust emissions exceeding 1.5 times the applicable standard or FEL for NMHC, NO_X (or NO_X+NMHC, as applicable) or CO.

(4) *Evaporative leaks.* If equipped, any vapor leak in the evaporative and/or refueling system (excluding the tubing and connections between the purge valve and the intake manifold) greater than or equal in magnitude to a leak caused by a 0.040 inch diameter orifice; an absence of evaporative purge air flow from the complete evaporative emission control system. Where fuel tank capacity is greater than 25 gallons, the Administrator may, following a request from the manufacturer, revise the size of the orifice to the smallest orifice feasible, based on test data, if the most reliable monitoring method available cannot reliably detect a system leak equal to a 0.040 inch diameter orifice.

(5) *Other emission control systems.* Any deterioration or malfunction occurring in an engine system or component directly intended to control emissions, including but not necessarily limited to, the exhaust gas recirculation (EGR) system, if equipped, the secondary air system, if equipped, and the fuel control system, singularly resulting in exhaust emissions exceeding 1.5 times the applicable emission standard or FEL for NMHC, NO_X (or NO_X+NMHC, as applicable), CO or diesel PM. For engines equipped with a secondary air system, a functional check, as described in paragraph (b)(6) of this section, may satisfy the requirements of this paragraph (b)(5) provided the manufacturer can demonstrate that deterioration of the flow distribution system is unlikely. This demonstration is subject to Administrator approval and, if the demonstration and associated functional check are approved, the diagnostic system must indicate a malfunction when some degree of secondary airflow is not detectable in

the exhaust system during the check. For engines equipped with positive crankcase ventilation (PCV), monitoring of the PCV system is not necessary provided the manufacturer can demonstrate to the Administrator's satisfaction that the PCV system is unlikely to fail.

* * * * *

(k) *Phase-in for heavy-duty engines.* Manufacturers of heavy-duty engines must comply with the OBD requirements in this section according to the following phase-in schedule, based on the percentage of projected engine sales within each category. The 2004 model year requirements in the following phase-in schedule are applicable only to heavy-duty Otto-cycle engines where the manufacturer has selected Otto-cycle Option 1 or Option 2 for alternative 2004 compliance according to § 86.005–01(c)(1) or (2). The 2005 through 2007 requirements in the following phase-in schedule apply to all heavy-duty engines intended for use in a heavy-duty vehicle weighing 14,000 pounds GVWR or less. Manufacturers may exempt 2005 model year diesel heavy-duty engines from the requirements of this section if the 2005 model year commences before July 31, 2004 from the requirements of this section. Manufacturers may exempt 2005 model year Otto-cycle heavy-duty engines and vehicles from the requirements of this section if the manufacturer has selected Otto-cycle Option 3 and if the 2005 model year commences before July 31, 2004. For the purposes of calculating compliance with the phase-in provisions of this paragraph (k), heavy-duty engines may be combined with heavy-duty vehicles subject to the phase-in requirements of paragraph § 86.1806–05(l). The OBD Compliance phase-in table follows:

OBD COMPLIANCE PHASE-IN FOR HEAVY-DUTY ENGINES INTENDED FOR USE IN A HEAVY-DUTY VEHICLE WEIGHING 14,000 POUNDS GVWR OR LESS

Model year	Otto-cycle phase-in based on projected sales	Diesel Phase-in based on projected sales
2004 MY	Applicable only to Otto-cycle engines complying with Options 1 or 2; 40% compliance; alternative fuel waivers available.	
2005 MY	60% compliance; alternative fuel waivers available	50% compliance; alternative fuel waivers available.
2006 MY	80% compliance; alternative fuel waivers available	50% compliance; alternative fuel waivers available.
2007 MY	80% compliance; alternative fuel waivers available	100% compliance.
2008+ MY	100% compliance	100% compliance.

18. Section 86.007–11 is amended by revising the introductory text, paragraphs (a) through (a)(2), (a)(3), (a)(4)(i), (b)(3) through (d), and adding paragraphs (a)(4)(iv)(C), (a)(4)(v), (e), (f), (g) and (h) to read as follows:

§ 86.007–11 Emission standards and supplemental requirements for 2007 and later model year diesel heavy-duty engines and vehicles.

This section applies to new 2007 and later model year diesel HDEs. Section 86.007–11 includes text that specifies requirements that differ from § 86.004–11. Where a paragraph in § 86.004–11 is identical and applicable to § 86.007–11, this may be indicated by specifying the corresponding paragraph and the statement ''[Reserved]. For guidance see § 86.004–11.''.

(a)(1) Exhaust emissions from new 2007 and later model year diesel HDEs shall not exceed the following:

(i) *Oxides of Nitrogen (NO_X).* (A) 0.20 grams per brake horsepower-hour (0.075 grams per megajoule).

(B) A manufacturer may elect to include any or all of its diesel HDE families in any or all of the NO_X and NO_X plus NMHC emissions ABT programs for HDEs, within the restrictions described in § 86.007–15 or § 86.004–15. If the manufacturer elects to include engine families in any of these programs, the NO_X FELs may not exceed the following FEL caps: 2.00 grams per brake horsepower-hour (0.75 grams per megajoule) for model years before 2010; 0.50 grams per brake horsepower-hour (0.19 grams per megajoule) for model years 2010 and later. This ceiling value applies whether credits for the family are derived from averaging, banking, or trading programs.

(ii)(A) *Non-Methane Hydrocarbons (NMHC) for engines fueled with either diesel fuel, natural gas, or liquefied petroleum gas.* 0.14 grams per brake horsepower-hour (0.052 grams per megajoule).

(B) *Non-Methane Hydrocarbon Equivalent (NMHCE) for engines fueled with methanol.* 0.14 grams per brake horsepower-hour (0.052 grams per megajoule).

(iii) *Carbon monoxide.* (A) 15.5 grams per brake horsepower-hour (5.77 grams per megajoule).

(B) 0.50 percent of exhaust gas flow at curb idle (methanol-, natural gas-, and liquefied petroleum gas-fueled diesel HDEs only). This does not apply for vehicles certified to the requirements of § 86.005–17

(iv) *Particulate.* (A) 0.01 grams per brake horsepower-hour (0.0037 grams per megajoule).

(B) A manufacturer may elect to include any or all of its diesel HDE families in any or all of the particulate ABT programs for HDEs, within the restrictions described in § 86.007–15 or other applicable sections. If the manufacturer elects to include engine families in any of these programs, the particulate FEL may not exceed 0.02 grams per brake horsepower-hour (0.0075 grams per megajoule).

(2) The standards set forth in paragraph (a)(1) of this section refer to the exhaust emitted over the operating schedule set forth in paragraph (f)(2) of appendix I to this part, and measured and calculated in accordance with the procedures set forth in subpart N or P of this part, except as noted in § 86.007–23(c)(2).

(3) *SET* (i) The weighted average exhaust emissions, as determined under § 86.1360–2007(e)(5) pertaining to the supplemental emission test cycle, for each regulated pollutant shall not exceed 1.0 times the applicable emission standards or FELs specified in paragraph (a)(1) of this section.

(ii) For engines not having a NO_X FEL less than1.5 g/bhp-hr, gaseous exhaust emissions shall not exceed the steady-state interpolated values determined by the Maximum Allowable Emission Limits (for the corresponding speed and load), as determined under § 86.1360–2007(f), when the engine is operated in the steady-state control area defined under § 86.1360–2007(d).

(4) *NTE* (i)(A) The brake-specific exhaust NMHC or NO_X emissions in g/bhp-hr, as determined under § 86.1370–2007 pertaining to the not-to-exceed test procedures, shall not exceed 1.5 times the applicable NMHC or NO_X emission standards or FELs specified in paragraph (a)(1) of this section, during engine and vehicle operation specified

in paragraph (a)(4)(ii) of this section except as noted in paragraph (a)(4)(iii) of this section.

(B) For engines not having a NO_X FEL less than1.50 g/bhp-hr, the brake-specific NO_X and NMHC exhaust emissions in g/bhp-hr, as determined under § 86.1370–2007 pertaining to the not-to-exceed test procedures, shall not exceed 1.25 times the applicable emission standards or FELs specified in paragraph (a)(1) of this section (or of § 86.004–11, as allowed by paragraph (g) of this section), during engine and vehicle operation specified in paragraph (a)(4)(ii) of this section except as noted in paragraph (a)(4)(iii) of this section.

(C) The brake-specific exhaust PM emissions in g/bhp-hr, as determined under § 86.1370–2007 pertaining to the not-to-exceed test procedures, shall not exceed 1.5 times the applicable PM emission standards or FEL (for FELs above the standard only) specified in paragraph (a)(1) of this section, during engine and vehicle operation specified in paragraph (a)(4)(ii) of this section except as noted in paragraph (a)(4)(iii) of this section.

(D) The brake-specific exhaust CO emissions in g/bhp-hr, as determined under § 86.1370–2007 pertaining to the not-to-exceed test procedures, shall not exceed 1.25 times the applicable CO emission standards or FEL specified in paragraph (a)(1) of this section, during engine and vehicle operation specified in paragraph (a)(4)(ii) of this section except as noted in paragraph (a)(4)(iii) of this section.

* * * * *

(iv) * * *

(C) For model years 2010 through 2013, the Administrator may allow up to three deficiencies per engine family. The provisions of paragraphs (a)(4)(iv)(A) and (B) of this section apply for deficiencies allowed by this paragraph (a)(4)(iv)(C). In determining whether to allow the additional deficiencies, the Administrator may consider any relevant factors, including the factors identified in paragraph (a)(4)(iv)(A) of this section. If additional deficiencies are approved, the Administrator may set any additional conditions that he/she determines to be appropriate.

(v) The emission limits specified in paragraphs (a)(3) and (a)(4) of this section shall be rounded to the same number of significant figures as the applicable standards in paragraph (a)(1) of this section using ASTM E29–93a (Incorporated by reference at § 86.1).

* * * * *

(b)(3) and (b)(4) [Reserved]. For guidance see § 86.004–11.

(c) No crankcase emissions shall be discharged directly into the ambient atmosphere from any new 2007 or later model year diesel HDE, with the following exception: HDEs equipped with turbochargers, pumps, blowers, or superchargers for air induction may discharge crankcase emissions to the ambient atmosphere if the emissions are added to the exhaust emissions (either physically or mathematically) during all emission testing. Manufacturers taking advantage of this exception must manufacture the engines so that all crankcase emission can be routed into a dilution tunnel (or other sampling system approved in advance by the Administrator), and must account for deterioration in crankcase emissions when determining exhaust deterioration factors. For the purpose of this paragraph (c), crankcase emissions that are routed to the exhaust upstream of exhaust aftertreatment during all operation are not considered to be ''discharged directly into the ambient atmosphere.''

(d) Every manufacturer of new motor vehicle engines subject to the standards prescribed in this section shall, prior to taking any of the actions specified in section 203(a)(1) of the Act, test or cause to be tested motor vehicle engines in accordance with applicable procedures in subpart I or N of this part to ascertain that such test engines meet the requirements of paragraphs (a), (b), (c), and (d) of this section.

(e) [Reserved]. For guidance see § 86.004–11.

(f) (1) Model year 2007 and later diesel-fueled heavy-duty engines and vehicles for sale in Guam, American Samoa, or the Commonwealth of the Northern Mariana Islands shall be subject to the same standards and requirements as apply to 2006 model year diesel heavy-duty engines and vehicles, but only if the vehicle or engine bears a permanently affixed label stating:

THIS ENGINE (or VEHICLE, as applicable) CONFORMS TO US EPA EMISSION STANDARDS APPLICABLE TO MODEL YEAR 2006. THIS ENGINE (or VEHICLE, as applicable) DOES NOT CONFORM TO US EPA EMISSION REQUIREMENTS IN EFFECT AT TIME OF PRODUCTION AND MAY NOT BE IMPORTED INTO THE UNITED STATES OR ANY TERRITORY OF THE UNITED STATES EXCEPT GUAM, AMERICAN SAMOA, OR THE COMMONWEALTH OF THE NORTHERN MARIANA ISLANDS.

(2) The importation or sale of such a vehicle or engine for use at any location U.S. other than Guam, American Samoa, or the Commonwealth of the Northern Mariana Islands shall be considered a violation of section 203(a)(1) of the Clean Air Act. In addition, vehicles or vehicle engines subject to this exemption may not subsequently be imported or sold into any state or territory of the United States other than Guam, American Samoa, or Commonwealth of the Northern Mariana Islands.

(g) Phase-in options. (1) For model years 2007, 2008, and 2009, manufacturers may certify some of their engine families to the combined NO_X plus NMHC standard applicable to model year 2006 engines under § 86.004–11, in lieu of the separate NO_X and NMHC standards specified in paragraph (a)(1) of this section. These engines must comply with all other requirements applicable to model year 2007 engines. The combined number of engines in the engine families certified to the 2006 combined NO_X plus NMHC standard may not exceed 50 percent of the manufacturer's U.S.-directed production of heavy-duty diesel motor vehicle engines for model year 2007, 2008, or 2009, except as explicitly allowed by this paragraph (g).

(2)(i) Manufacturers certifying engines to all of the applicable standards listed in paragraph (a) and (c) of this section (without using credits) prior to model year 2007 may reduce the number of engines that are required to meet the standards listed in paragraph (a) of this section in model year 2007, 2008 and/or 2009, taking into account the phase-in option provided in paragraph (g)(1) of this section. For every two engines that are certified early, the manufacturer may reduce the number of engines that are required by paragraph (g)(1) of this section to meet standards listed in paragraph (a)(1) of this section by three engines. For example, if a manufacturer produces 100 heavy-duty diesel engines in 2006 that meet all of the applicable standards listed in paragraph (a) of this section, and it produced 10,000 heavy-duty diesel engines in 2007, then only 4,850 ((10,000)(0.50) − (100)(1.5)) of the engines would need to comply with the standards listed in paragraph (a) of this section.

(ii) Manufacturers certifying engines to the PM standards listed in paragraph (a), and to all of the applicable standards in paragraph (c) of this section (without using credits) prior to model year 2007 may reduce the number of engines that are required to meet the PM standard listed in paragraph (a) of this section in model year 2007, 2008 and/or 2009. For every two engines that are certified to the PM standard early, the manufacturer may reduce the number of engines that are otherwise required to meet the PM

standard listed in paragraph (a)(1) of this section by three engines.

(3) Manufacturers may initially base compliance with the phase-in requirements of paragraph (g)(1) or (g)(2) of this section on projected U.S.-directed production estimates. This is allowed for model year 2007 and/or 2008. However, if a manufacturer's actual U.S. directed production volume of engines that comply with the model year 2007 NO_X and NMHC standards is less than the required amount, the shortfall (in terms of number of engines) must be made up prior to 2010. For example, if a manufacturer plans in good faith to produce 50 percent of its projected 10,000 2007 engines (i.e., 5,000 engines) in compliance with the 2007 NO_X and NMHC standard, but is only able to produce 4,500 such engines of an actual 10,000 2007 engines, the manufacturer would need to produce an extra 500 engines in 2008 or 2009 in compliance with the 2007 NO_X and NMHC standard. The deficit allowed by this paragraph (g)(3) may not exceed 25 percent of the U.S. directed production volume.

(4) Manufacturers certifying engines to a voluntary NO_X standard of 0.10 g/bhp-hr (without using credits) in addition to all of the other applicable standards listed in paragraphs (a) and (c) of this section prior to model year 2007 may reduce the number of engines that are required to meet the standards listed in paragraph (a)(1) of this section in model year 2007, 2008 and/or 2009, taking into account the phase-in option provided in paragraph (g)(1) of this section. For every engine that is certified early under this provision, the manufacturer may reduce the number of engines that are required by paragraph (g)(1) of this section to meet the standards listed in paragraph (a)(1) of this section by two engines.

(5) For engines certified under paragraph (g)(1) of this section to the NO_X+NMHC standard in § 86.004–11, the standards or FELs to which they are certified shall be used for the purposes of paragraphs (a)(3) and (a)(4) of this section.

(h)(1) For model years prior to 2012, for purposes of determining compliance after title or custody has transferred to the ultimate purchaser, for engines having a NO_X FEL no higher than 1.30 g/bhp-hr, the applicable compliance limit shall be determined by adding the applicable adjustment from paragraph (h)(2) of this section to the otherwise applicable standard or FEL for NO_X.

(2)(i) For engines with 110,000 or fewer miles, the adjustment is 0.10 g/bhp-hr.

(ii) For engines with 110,001 to 185,000 miles, the adjustment is 0.15 g/bhp-hr.

(iii) For engines with 185,001 or more miles, the adjustment is 0.20 g/bhp-hr.

(3) For model years prior to 2012, for purposes of determining compliance after title or custody has transferred to the ultimate purchaser, the applicable compliance limit shall be determined by adding 0.01 g/bhp-hr to the otherwise applicable standard or FEL for PM.

19. A new § 86.007–is added to Subpart A to read as follows:

§ 86.007–15 NO_X and particulate averaging, trading, and banking for heavy-duty engines.

Section 86.007–15 includes text that specifies requirements that differ from § 86.004–15. Where a paragraph in § 86.004–15 is identical and applicable to § 86.007–15, this may be indicated by specifying the corresponding paragraph and the statement ''[Reserved]. For guidance see § 86.004–15.''

(a) through (l) [Reserved]. For guidance see § 86.004–15.

(m) The following provisions apply for model year 2007 and later engines (including engines certified during years 2007–2009 under the phase-in provisions of § 86.007–11(g)(1), § 86.005–10(a), or § 86.008–10(f)(1)). These provisions apply instead of the provisions of paragraphs § 86.004–15 (a) through (k) to the extent that they are in conflict.

(1) Manufacturers of Otto-cycle engines may participate in an NMHC averaging, banking and trading program to show compliance with the standards specified in § 86.008–10. The generation and use of NMHC credits are subject to the same provisions in paragraphs § 86.004–15 (a) through (k) that apply for NO_X plus NMHC credits, except as otherwise specified in this section.

(2) Credits are calculated as NO_X or NMHC credits for engines certified to separate NO_X and NMHC standards. NO_X plus NMHC credits (including banked credits and credits that are generated during years 2007–2009 under the phase-in provisions of § 86.007–11(g)(1), § 86.005–10(a), or § 86.008–10(f)(1)) may be used to show compliance with 2007 or later NO_X standards (NO_X or NMHC standards for Otto-cycle engines), subject to an 0.8 discount factor (e.g., 100 grams of NO_X plus NMHC credits is equivalent to 80 grams of NO_X credits).

(3) NO_X or NMHC (or NO_X plus NMHC) credits may be exchanged between heavy-duty Otto-cycle engine families certified to the engine standards of this subpart and heavy-duty Otto-cycle engine families certified to the chassis standards of subpart S of this part, subject to an 0.8 discount factor (e.g., 100 grams of NO_X (or NO_X plus NMHC) credits generated from engines would be equivalent to 80 grams of NO_X credits if they are used in the vehicle program of subpart S, and vice versa).

(4) Credits that were previously discounted when they were banked according to paragraph (c) of § 86.004–15, are subject to an additional discount factor of 0.888 instead of the 0.8 discount factor otherwise required by paragraph (m)(2) or (m)(3) of this section. This results in a total discount factor of 0.8 ($0.9 \times 0.888 = 0.8$).

(5) For diesel engine families, the combined number of engines certified to FELs higher than 0.50 g/bhp-hr using banked NO_X (and/or NO_X plus NMHC) credits in any given model year may not exceed 10 percent of the manufacturer's U.S.-directed production of engines in all heavy-duty diesel engine families for that model year.

(6) The FEL must be expressed to the same number of decimal places as the standard (generally, one-hundredth of a gram per brake horsepower-hour). For engines certified to standards expressed only one-tenth of a gram per brake horsepower-hour, if the FEL is below 1.0, then add a zero to the standard in the second decimal place and express the FEL to nearest one-hundredth of a gram per brake horsepower-hour.

(7) Credits are to be rounded to the nearest one-hundredth of a Megagram using ASTM E29–93a (Incorporated by reference at § 86.1).

(8) Credits generated for 2007 and later model year diesel engine families, or generated for 2008 and later model year Otto-cycle engine families are not discounted (except as specified in paragraph (m)(2) or (m)(3) of this section), and do not expire.

(9) For the purpose of using or generating credits during a phase-in of new standards, a manufacturer may elect to split an engine family into two subfamilies (e.g., one which uses credits and one which generates credits). The manufacturer must indicate in the application for certification that the engine family is to be split, and may assign the numbers and configurations of engines within the respective subfamilies at any time prior to the submission of the end-of-year report required by § 86.001–23.

(i) Manufacturers certifying a split diesel engine family to both the Phase 1 and Phase 2 standards with equally sized subfamilies may exclude the engines within that split family from end-of-year NO_X (or NO_X+NMHC) ABT calculations, provided that neither

subfamily generates credits for use by other engine families, or uses banked credits, or uses averaging credits from other engine families. All of the engines in that split family must be excluded from the phase-in calculations of § 86.007–11(g)(1) (both from the number of engines complying with the standards being phased-in and from the total number of U.S.-directed production engines.)

(ii) Manufacturers certifying a split Otto-cycle engine family to both the Phase 1 and Phase 2 standards with equally sized subfamilies may exclude the engines within that split family from end-of-year NO_X (or NO_X+NMHC) ABT calculations, provided that neither subfamily generates credits for use by other engine families, or uses banked credits, or uses averaging credits from other engine families. All of the engines in that split family must be excluded from the phase-in calculations of § 86.008–10(f)(1) (both from the number of engines complying with the standards being phased-in and from the total number of U.S.-directed production engines.)

(iii) Manufacturers certifying a split engine family may label all of the engines within that family with a single NO_X or NO_X+NMHC FEL. The FEL on the label will apply for all SEA or other compliance testing.

(iv) Notwithstanding the provisions of paragraph (m)(9)(iii) of this section, for split families, the NO_X FEL shall be used to determine applicability of the provisions of § 86.007–11(a)(3)(ii), (a)(4)(i)(B), and (h)(1), and § 86.008–10(g).

(10) For model years 2007 through 2009, to be consistent with the phase-in provisions of § 86.007–11(g)(1), credits generated from engines in one diesel engine service class (e.g., light-heavy duty diesel engines) may be used for averaging by engines in a different diesel engine service class, provided the credits are calculated for both engine families using the conversion factor and useful life of the engine family using the credits, and the engine family using the credits is certified to the standards listed in § 86.007–11(a)(1). Banked or traded credits may not be used by any engine family in a different service class than the service class of the engine family generating the credits.

20. A new § 86.007–23 is added to Subpart A to read as follows:

§ 86.007–23 Required data.

Section 86.007–23 includes text that specifies requirements that differ from § 86.095–23, § 86.098–23, or § 86.001–23. Where a paragraph in § 86.095–23, § 86.098–23, or § 86.001–23 is identical and applicable to § 86.007–23, this may be indicated by specifying the corresponding paragraph and the statement ''[Reserved]. For guidance see § 86.095–23.'', ''[Reserved]. For guidance see § 86.098–23.'', or ''[Reserved]. For guidance see § 86.001–23.''.

(a) through (b)(1) [Reserved]. For guidance see § 86.098–23.

(b)(2) [Reserved]. For guidance see § 86.001–23.

(b)(3) and (b)(4) [Reserved]. For guidance see § 86.098–23.

(c) *Emission data.*—(1) *Certification vehicles.* The manufacturer shall submit emission data (including, methane, methanol, formaldehyde, and hydrocarbon equivalent, as applicable) on such vehicles tested in accordance with applicable test procedures and in such numbers as specified. These data shall include zero-mile data, if generated, and emission data generated for certification as required under § 86.000–26(a)(3). In lieu of providing emission data the Administrator may, on request of the manufacturer, allow the manufacturer to demonstrate (on the basis of previous emission tests, development tests, or other information) that the engine will conform with certain applicable emission standards of this part. Standards eligible for such manufacturer requests are those for idle CO emissions, smoke emissions, or particulate emissions from methanol-fueled or gaseous-fueled diesel-cycle certification vehicles, those for particulate emissions from Otto-cycle certification vehicles or gaseous-fueled vehicles, and those for formaldehyde emissions from petroleum-fueled vehicles. Also eligible for such requests are standards for total hydrocarbon emissions from model year 1994 and later certification vehicles. By separate request, including appropriate supporting test data, the manufacturer may request that the Administrator also waive the requirement to measure particulate or formaldehyde emissions when conducting Selective Enforcement Audit testing of Otto-cycle vehicles.

(2) *Certification engines.* The manufacturer shall submit emission data on such engines tested in accordance with applicable emission test procedures of this subpart and in such numbers as specified. These data shall include zero-hour data, if generated, and emission data generated for certification as required under § 86.000–26(c)(4). In lieu of providing emission data on idle CO emissions or particulate emissions from methanol-fueled or gaseous-fueled diesel-cycle certification engines, on particulate emissions from Otto-cycle engines, or on CO emissions from diesel-cycle certification engines, the Administrator may, on request of the manufacturer, allow the manufacturer to demonstrate (on the basis of previous emission tests, development tests, or other information) that the engine will conform with the applicable emission standards of this part. In lieu of providing emission data on smoke emissions from methanol-fueled or petroleum-fueled diesel certification engines, the Administrator may, on the request of the manufacturer, allow the manufacturer to demonstrate (on the basis of previous emission tests, development tests, or other information) that the engine will conform with the applicable emissions standards of this part. In lieu of providing emissions data on smoke emissions from diesel-cycle engines when conducting Selective Enforcement Audit testing under subpart K of this part, the Administrator may, on separate request of the manufacturer, allow the manufacturer to demonstrate (on the basis of previous emission tests, development tests, or other information) that the engine will conform with the applicable smoke emissions standards of this part .

(d) through (e)(1) [Reserved]. For guidance see § 86.098–23.

(e)(2) and (e)(3) [Reserved]. For guidance see § 86.001–23.

(f) through (g) [Reserved]. For guidance see § 86.095–23.

(h) through (k) [Reserved]. For guidance see § 86.098–23.

(l) [Reserved]. For guidance see § 86.095–23.

(m) [Reserved]. For guidance see § 86.098–23.

21. A new § 86.007–25 is added to Subpart A to read as follows:

§ 86.007–25 Maintenance.

Section 86.007–25 includes text that specifies requirements that differ from § 86.094–25, § 86.098–25, or § 86.004–25. Where a paragraph in § 86.094–25, § 86.098–25, or § 86.004–25 is identical and applicable to § 86.007–25, this may be indicated by specifying the corresponding paragraph and the statement ''[Reserved]. For guidance see § 86.094–25.'', ''[Reserved]. For guidance see § 86.098–25.'', or ''[Reserved]. For guidance see § 86.004–25.''.

(a) through (a)(2) [Reserved]. For guidance see § 86.004–25.

(b) introductory text through (b)(3)(ii) [Reserved]. For guidance see § 86.094–25.

(b)(3)(iii) through (b)(3)(v)(H) [Reserved]. For guidance see § 86.004–25.

(b)(3)(vi)(A) through (b)(3)(vi)(D) [Reserved]. For guidance see § 86.094–25.

(b)(3)(vi)(E) through (b)(3)(vi)(J) [Reserved]. For guidance see § 86.098–25.

(b)(4) introductory text through (b)(4)(iii)(C) [Reserved]. For guidance see § 86.004–25.

(b)(4)(iii)(D) Particulate trap or trap oxidizer systems including related components (adjustment and cleaning only for filter element, replacement of the filter element is not allowed during the useful life).

(b)(4)(iii)(E) [Reserved]. For guidance see § 86.004–25.

(F) Catalytic converter (adjustment and cleaning only for catalyst beds, replacement of the bed is not allowed during the useful life).

(b)(4)(iii)(G) through (b)(6) [Reserved]. For guidance see § 86.004–25.

(b)(7) through (h) [Reserved]. For guidance see § 86.094–25.

(i) Notwithstanding the provisions of § 86.004–25(b)(4)(iii) introductory text through (b)(4)(iii)(C), paragraph (b)(4)(iii)(D) of this section, § 86.004–25(b)(4)(iii)(E), paragraph (b)(4)(iii)(F) of this section, § 86.004–25(b)(4)(iii)(G), and § 86.004–25(b)(6), manufacturers of heavy-duty engines may schedule replacement or repair of particulate trap (or trap oxidizer) systems or catalytic converters (including NO_X adsorbers), provided:

(1) The manufacturer demonstrates to the Administrator's satisfaction that the repair or replacement will be performed according to the schedule; and

(2) The manufacturer pays for the repair or replacement.

22. A new § 86.007–35 is added to Subpart A to read as follows:

§ 86.007–35 Labeling.

Section 86.007–35 includes text that specifies requirements that differ from § 86.095–35. Where a paragraph in § 86.095–35 is identical and applicable to § 86.007–35, this may be indicated by specifying the corresponding paragraph and the statement ''[Reserved]. For guidance see § 86.095–35.''.

(a) Introductory text through (a)(1)(iii)(L) [Reserved]. For guidance see § 86.095–35.

(a)(1)(iii)(M) [Reserved.]

(a)(1)(iii)(N)(*1*) For vehicles exempted from compliance with certain revised performance warranty procedures, as specified in § 86.096–21(j), a statement indicating the specific performance warranty test(s) of 40 CFR part 85, subpart W, not to be performed.

(*2*) For vehicles exempted from compliance with all revised performance warranty procedures, as specified in § 86.096–21(k), a statement indicating:

(*i*) That none of the performance warranty tests of 40 CFR part 85, subpart W, is to be performed; and

(*ii*) The name of the Administrator-approved alternative test procedure to be performed.

(2) Light-duty truck and heavy-duty vehicles optionally certified in accordance with the light-duty truck provisions.

(i) A legible, permanent label shall be affixed in a readily visible position in the engine compartment.

(ii) The label shall be affixed by the vehicle manufacturer who has been issued the certificate of conformity for such vehicle, in such a manner that it cannot be removed without destroying or defacing the label. The label shall not be affixed to any equipment which is easily detached from such vehicle.

(iii) The label shall contain the following information lettered in the English language in block letters and numerals, which shall be of a color that contrasts with the background of the label:

(A) The label heading: Important Vehicle Information;

(B) Full corporate name and trademark of the manufacturer;

(C) Engine displacement (in cubic inches or liters), engine family identification, and evaporative/refueling family;

(a)(2)(iii)(D) through (a)(2)(iii)(E) [Reserved]. For guidance see § 86.095–35.

(a)(2)(iii)(F) [Reserved]

(a)(2)(iii)(G) through (a)(2)(iii)(K) [Reserved]. For guidance see § 86.095–35.

(a)(2)(iii)(L) [Reserved]

(a)(2)(iii)(M) through (a)(2)(iii)(N) [Reserved]. For guidance see § 86.095–35.

(a)(2)(iii)(O)(l) For vehicles exempted from compliance with certain revised performance warranty procedures, as specified in § 86.096–21(j), a statement indicating the specific performance warranty test(s) of 40 CFR part 85, subpart W, not to be performed.

(*2*) For vehicles exempted from compliance with all revised performance warranty procedures, as specified in § 86.096–21(k), a statement indicating:

(*i*) That none of the performance warranty tests of 40 CFR part 85, subpart W, is to be performed, and

(*ii*) The name of the Administrator-approved alternative test procedure to be performed.

(a)(3) heading through (b) [Reserved]. For guidance see § 86.095–35.

(c) Model year 2007 and later diesel-fueled vehicles must include permanent readily visible labels on the dashboard (or instrument panel) and near all fuel inlets that state ''Use Low-Sulfur Diesel Fuel Only'' or ''Low-Sulfur Diesel Fuel Only''.

(d) through (i) [Reserved]. For guidance see § 86.095–35.

23. A new § 86.007–38 is added to Subpart A to read as follows:

§ 86.007–38 Maintenance instructions.

Section 86.007–38 includes text that specifies requirements that differ from those specified in § 86.094–38 or § 86.004–38. Where a paragraph in § 86.094–38 or § 86.004–38 is identical and applicable to § 86.007–38, this may be indicated by specifying the corresponding paragraph and the statement ''[Reserved]. For guidance see § 86.094–38.'', or ''[Reserved]. For guidance see § 86.004–38.''.

(a) through (f) [Reserved]. For guidance see § 86.004–38.

(g) [Reserved]. For guidance see § 86.094–38.

(h) [Reserved]. For guidance see § 86.004–38.

(i) For each new diesel-fueled engine subject to the standards prescribed in § 86.007–11, as applicable, the manufacturer shall furnish or cause to be furnished to the ultimate purchaser a statement that ''This engine must be operated only with low sulfur diesel fuel (that is, diesel fuel meeting EPA specifications for highway diesel fuel, including a 15 ppm sulfur cap).''

24. A new § 86.008–10 is added to subpart A to read as follows:

§ 86.008–10 Emission standards for 2008 and later model year Otto-cycle heavy-duty engines and vehicles.

Section 86.008–10 includes text that specifies requirements that differ from § 86.099–10. Where a paragraph in § 86.099–10 is identical and applicable to § 86.008–10, this may be indicated by specifying the corresponding paragraph and the statement ''[Reserved]. For guidance see § 86.099–10.''.

(a)(1) Exhaust emissions from new 2008 and later model year Otto-cycle HDEs shall not exceed:

(i)(A) *Oxides of Nitrogen (NO_X).* 0.20 grams per brake horsepower-hour (0.075 grams per megajoule).

(B) A manufacturer may elect to include any or all of its Otto-cycle HDE families in any or all of the NO_X and NO_X plus NMHC emissions ABT programs for HDEs, within the restrictions described in § 86.008–15 or § 86.004–15. If the manufacturer elects to include engine families in any of these programs, the NO_X FEL may not exceed 0.50 grams per brake horsepower-hour (0.26 grams per

megajoule). This ceiling value applies whether credits for the family are derived from averaging, banking, or trading programs. The NO_X FEL cap is 0.80 for model years before 2011 for manufacturers choosing to certify to the 1.5 g/bhp-hr NO_X+NMHC standard in 2003 or 2004, in accordance with § 86.005–10(f).

(ii)(A) *Non-methane Hydrocarbons (NMHC) for engines fueled with either gasoline, natural gas, or liquefied petroleum gas.* 0.14 grams per brake horsepower-hour (0.052grams per megajoule).

(B) *Non-methane Hydrocarbon Equivalent (NMHCE) for engines fueled with methanol.* 0.14 grams per brake horsepower-hour (0.052grams per megajoule).

(C) A manufacturer may elect to include any or all of its Otto-cycle HDE families in any or all of the NMHC emissions ABT programs for HDEs, within the restrictions described in § 86.008–15 or § 86.004–15. If the manufacturer elects to include engine families in any of these programs, the NMHC FEL may not exceed 0.30 grams per brake horsepower-hour. This ceiling value applies whether credits for the family are derived from averaging, banking, or trading programs. The NMHC FEL cap is 0.40 for model years before 2011 for manufacturers choosing to certify to the 1.5 g/bhp-hr NO_X+NMHC in 2004, as allowed in § 86.005–10.

(iii)(A) *Carbon monoxide.* 14.4 grams per brake horsepower-hour (5.36 grams per megajoule).

(B) *Idle Carbon Monoxide.* For all Otto-cycle HDEs utilizing aftertreatment technology, and not certified to the onboard diagnostics requirements of § 86.005–17: 0.50 percent of exhaust gas flow at curb idle.

(iv) *Particulate.* 0.01grams per brake horsepower-hour (0.0037grams per megajoule).

(2) The standards set forth in paragraph (a)(1) of this section refer to the exhaust emitted over the operating schedule set forth in paragraph (f)(1) of appendix I to this part, and measured and calculated in accordance with the procedures set forth in subpart N or P of this part.

(3) [Reserved]

(4) [Reserved]

(b) Evaporative emissions from heavy-duty vehicles shall not exceed the following standards. The standards apply equally to certification and in-use vehicles. The spitback standard also applies to newly assembled vehicles. For certification vehicles only, manufacturers may conduct testing to quantify a level of nonfuel background emissions for an individual test vehicle. Such a demonstration must include a description of the source(s) of emissions and an estimated decay rate. The demonstrated level of nonfuel background emissions may be subtracted from emission test results from certification vehicles if approved in advance by the Administrator.

(1) Hydrocarbons (for vehicles equipped with gasoline-fueled, natural gas-fueled or liquefied petroleum gas-fueled engines).

(i) For vehicles with a Gross Vehicle Weight Rating of up to 14,000 lbs:

(A)(*1*) For the full three-diurnal test sequence described in § 86.1230–96, diurnal plus hot soak measurements: 1.4 grams per test.

(*2*) For the supplemental two-diurnal test sequence described in § 86.1230–96, diurnal plus hot soak measurements (gasoline-fueled vehicles only): 1.75 grams per test.

(B) Running loss test (gasoline-fueled vehicles only): 0.05 grams per mile.

(C) Fuel dispensing spitback test (gasoline-fueled vehicles only): 1.0 grams per test.

(ii) For vehicles with a Gross Vehicle Weight Rating of greater than 14,000 lbs:

(A)(*1*) For the full three-diurnal test sequence described in § 86.1230–96, diurnal plus hot soak measurements: 1.9 grams per test.

(*2*) For the supplemental two-diurnal test sequence described in § 86.1230–96, diurnal plus hot soak measurements (gasoline-fueled vehicles only): 2.3 grams per test.

(B) Running loss test (gasoline-fueled vehicles only): 0.05 grams per mile.

(2) Total Hydrocarbon Equivalent (for vehicles equipped with methanol-fueled engines).

(i) For vehicles with a Gross Vehicle Weight Rating of up to 14,000 lbs:

(A)(*1*) For the full three-diurnal test sequence described in § 86.1230–96, diurnal plus hot soak measurements: 1.4 grams carbon per test.

(*2*) For the supplemental two-diurnal test sequence described in § 86.1230–96, diurnal plus hot soak measurements: 1.75 grams carbon per test.

(B) Running loss test: 0.05 grams carbon per mile.

(C) Fuel dispensing spitback test: 1.0 grams carbon per test.

(ii) For vehicles with a Gross Vehicle Weight Rating of greater than 14,000 lbs:

(A)(*1*) For the full three-diurnal test sequence described in § 86.1230–96, diurnal plus hot soak measurements: 1.9 grams carbon per test.

(*2*) For the supplemental two-diurnal test sequence described in § 86.1230–96, diurnal plus hot soak measurements: 2.3 grams carbon per test.

(B) Running loss test: 0.05 grams carbon per mile.

(3)(i) For vehicles with a Gross Vehicle Weight Rating of up to 26,000 lbs, the standards set forth in paragraphs (b)(1) and (b)(2) of this section refer to a composite sample of evaporative emissions collected under the conditions and measured in accordance with the procedures set forth in subpart M of this part.

(ii) For vehicles with a Gross Vehicle Weight Rating of greater than 26,000 lbs., the standards set forth in paragraphs (b)(1)(ii) and (b)(2)(ii) of this section refer to the manufacturer's engineering design evaluation using good engineering practice (a statement of which is required in § 86.098–23(b)(4)(ii)).

(4) All fuel vapor generated in a gasoline- or methanol-fueled heavy-duty vehicle during in-use operations shall be routed exclusively to the evaporative control system (e.g., either canister or engine purge). The only exception to this requirement shall be for emergencies.

(c) No crankcase emissions shall be discharged into the ambient atmosphere from any new 2008 or later model year Otto-cycle HDE.

(d) Every manufacturer of new motor vehicle engines subject to the standards prescribed in this section shall, prior to taking any of the actions specified in section 203(a)(1) of the Act, test or cause to be tested motor vehicle engines in accordance with applicable procedures in subpart N or P of this part to ascertain that such test engines meet the requirements of this section.

(e) [Reserved]. For guidance see § 86.099–10.

(f) Phase-in options. (1)(i) For model year 2008, manufacturers may certify some of their engine families to the exhaust standards applicable to model year 2007 engines under § 86.005–10, in lieu of the exhaust standards specified in this section. These engines must comply with all other requirements applicable to model year 2008 engines, except as allowed by paragraph (f)(1)(ii) of this section. The combined number of engines in the engine families certified to the 2007 combined NO_X plus NMHC standard may not exceed 50 percent of the manufacturer's U.S.-directed production of heavy-duty Otto-cycle motor vehicle engines for model year 2008, except as explicitly allowed by paragraph (f)(2) of this section.

(ii) For model year 2008, manufacturers may certify some of their engine families to the evaporative standards applicable to model year 2007 engines under § 86.005–10, in lieu of the standards specified in this section.

These engines must comply with all other requirements applicable to model year 2008 engines, except as allowed by paragraph (f)(1)(i) of this section. The combined number of engines in the engine families certified to the 2007 standards may not exceed 50 percent of the manufacturer's U.S.-directed production of heavy-duty Otto-cycle motor vehicle engines for model year 2008.

(2)(i) Manufacturers certifying engines to all of the applicable exhaust standards listed in paragraph (a) of this section prior to model year 2008 (without using credits) may reduce the number of engines that are required to meet the NO_X and NMHC exhaust standards listed in paragraph (a) of this section in model year 2008 and/or 2009, taking into account the phase-in option provided in paragraph (f)(1) of this section. For every engine that is certified early, the manufacturer may reduce the number of engines that are required by paragraph (f)(1) of this section to meet the NO_X and NMHC standards listed in paragraph (a) of this section by one engine. For example, if a manufacturer produces 100 heavy-duty Otto-cycle engines in 2007 that meet all of the applicable standards listed in paragraph (a) of this section, and it produced 10,000 heavy-duty Otto-cycle engines in 2009, then only 9,900 of the engines would need to comply with the NO_X and NMHC standards listed in paragraph (a) of this section.

(ii) Manufacturers certifying engines to all of the applicable evaporative standards listed in paragraph (b) of this section prior to model year 2008 may reduce the number of engines that are required to meet the evaporative standards listed in paragraph (a) of this section in model year 2008 and/or 2009, taking into account the phase-in option provided in paragraph (f)(1) of this section. For every engine that is certified early, the manufacturer may reduce the number of engines that are required by paragraph (f)(1) of this section to meet evaporative standards listed in paragraph (b) of this section by one engine.

(3) Manufacturers certifying engines to a voluntary NO_X standard of 0.10 g/bhp-hr (without using credits) in addition to all of the applicable standards listed in paragraphs (a) and (b) of this section prior to model year 2008 may reduce the number of engines that are required to meet the NO_X and NMHC standards listed in paragraph (a) of this section in model year 2008 and/or 2009, taking into account the phase-in option provided in paragraph (f)(1) of this section. For such every engine that is certified early, the manufacturer may reduce the number of engines that are required by paragraph (f)(1) of this section to meet the NO_X and NMHC standards listed in paragraph (a) of this section by two engines.

(g) For model years prior to 2012, for purposes of determining compliance after title or custody has transferred to the ultimate purchaser, for engines having a NO_X FEL no higher than 0.50 g/bhp-hr, the applicable compliance limits for NO_X and NMHC shall be determined by adding 0.10 g/bhp-hr to the otherwise applicable standards or FELs for NO_X and NMHC.

25. A new § 86.113–07 is added to subpart B to read as follows:

§ 86.113–07 Fuel specifications.

Section 86.113–07 includes text that specifies requirements that differ from § 86.113–94 or § 86.113–04. Where a paragraph in § 86.113–94 or § 86.113–04 is identical and applicable to § 86.113–07, this may be indicated by specifying the corresponding paragraph and the statement ''[Reserved]. For guidance see § 86.113–94.'' or ''[Reserved]. For guidance see § 86.113–04.''.

(a) [Reserved]. For guidance see § 86.113–04.

(b)(1) [Reserved]. For guidance see § 86.113–94.

(b)(2) Petroleum fuel for diesel vehicles meeting the following specifications, or substantially equivalent specifications approved by the Administrator, must be used in exhaust emissions testing. The grade of petroleum diesel fuel recommended by the engine manufacturer, commercially designated as ''Type 2–D'' grade diesel, must be used:

Item		ASTM test method No.	Type 2–D
(i) Cetane Number		D613	40–50
(ii) Cetane Index		D976	40–50
(iii) Distillation range:			
(A) IBP	°F	D86	340–400
	(°C)		(171.1–204.4)
(B) 10 pct. point	°F	D86	400–460
	(°C)		(204.4–237.8)
(C) 50 pct. point	°F	D86	470–540
	(°C)		(243.3–282.2)
(D) 90 pct. point	°F	D86	560–630
	(°C)		(293.3–332.2)
(E) EP	°F	D86	610–690
	(°C)		(321.1–365.6)
(iv) Gravity	°API	D287	32–37
(v) Total sulfur	ppm	D2622	7–15
(vi) Hydrocarbon composition:			
(A) Aromatics, minimum (Remainder shall be paraffins, naphthenes, and olefins)	pct.	D5186	27
(vii) Flashpoint, min.	°F	D93	130
	(°C)		(54.4)
(viii) Viscosity	centistokes	D445	2.0–3.2

(3) Petroleum fuel for diesel vehicles meeting the following specifications, or substantially equivalent specifications approved by the Administrator, shall be used in service accumulation. The grade of petroleum diesel fuel recommended by the engine manufacturer, commercially designated as ''Type 2-D'' grade diesel fuel, shall be used: (b)(4) through (g) [Reserved]. For guidance see § 86.113–94.

Item		ASTM test method No.	Type 2–D
(i) Cetane Number		D613	38–58

Item		ASTM test method No.	Type 2–D
(ii) Cetane Index		D976	min. 40
(iii) Distillation range:			
90 pct. point	°F	D86	540–630
(iv) Gravity	°API	D287	30–39
(v) Total sulfur	ppm	D2622	7–15
(vi) Flashpoint, min.	°F	D93	130
	(°C)		(54.4)
(vii) Viscosity	centistokes	D445	1.5–4.5

(h)(1) For model year 2004 through 2006 Tier 2 diesel-fueled vehicles that incorporate sulfur-sensitive technologies, the manufacturer may test the vehicle using a test fuel meeting the specifications listed in paragraphs (b)(2) and (b)(3) of this section, provided the manufacturer clearly recommends to the ultimate purchaser in the owner's manual that the vehicle should use fuel with no higher than 15 ppm sulfur.

(2) For model year 2004 through 2006 Tier 2 diesel-fueled vehicles that incorporate sulfur-sensitive technologies and that are certified for 50-state sale (*i.e.,* certified to California and EPA standards), the manufacturer may test the vehicle using a test fuel whose qualities, on a specification by specification basis, meet the requirements of either the specifications listed in paragraph (b)(2) of this section or the California test fuel specifications, provided the manufacturer clearly recommends to the ultimate purchaser in the owner's manual that the vehicle should use fuel with no higher than 15 ppm sulfur.

(3) Where a manufacturer uses a test fuel under paragraph (h)(1) or (h)(2) of this section, EPA shall use the same fuel for its compliance testing.

26. A new § 86.1213–04 is added to Subpart M to read as follows:

§ 86.1213–04 Fuel specifications.

The test fuels listed in § 86.1313–04 shall be used for evaporative emission testing.

27. A new § 86.1306–07 is added to subpart N to read as follows:

§ 86.1306–07 Equipment required and specifications; overview.

Section 86.1306–07 includes text that specifies requirements that differ from § 86.1306–96. Where a paragraph in § 86.1306–96 is identical and applicable to § 86.1306–07, this may be indicated by specifying the corresponding paragraph and the statement ''[Reserved]. For guidance see § 86.1306–96.''.

(a) and (b) [Reserved]. For guidance see § 86.1306–96.

(c)(1) Upon request, the Administrator may allow a manufacturer to use some of the test equipment allowed for model year 2006 and earlier engines instead of the test equipment required for model year 2007 and later engines, provided that good engineering judgment indicates that it would not adversely affect determination of compliance with the applicable emission standards of this part.

(2) A manufacturer may use the test equipment required for model year 2007 and later engines for earlier model year engines, provided that good engineering judgment indicates that it would not adversely affect determination of compliance with the applicable emission standards of this part.

(d) Approval of alternate test system. (1) If on the basis of the information described in paragraph (d)(5) of this section, the Administrator determines that an alternate test system would consistently and reliably produce emission test results that are at least equivalent to the results produced using the test systems described in this subpart, he/she shall approve the alternate system for optional use instead of the test systems described in this subpart.

(2) Any person may submit an application for approval of an alternate test system.

(3) In approving an alternate test system, the Administrator may approve it for general use, or may approve it conditionally.

(4) The Administrator may revoke the approval on the basis of new information that indicates that the alternate test system is not equivalent. However, revocation of approval must allow manufacturers sufficient lead-time to change the test system to an approved system. In determining the amount of lead-time that is required, the Administrator will consider relevant factors such as:

(i) The ease with which the test system can be converted to an approved system.

(ii) The degree to which the alternate system affects the measured emission rates.

(iii) Any relevant conditions included in the approval.

(5) The application for approval must include:

(i) *An explanation of the theoretical basis of the alternate system.* This technical description should explain why the detection principle of the alternate system would provide equivalent results to the detection principle of the prescribed system for the full range of emission properties being measured. This description may include equations, figures, and references. For example, a NO_X measurement application should theoretically relate the alternate detection principle to the chemiluminescent detection principle of detecting nitric oxide for a typical range of NO to NO_2 ratios. A PM measurement application should explain the principle(s) by which the alternate system quantifies PM mass independent of PM composition, and how it is impacted by semi-volatile and volatile species= phase distributions. For any proportioning or integrating system, the application should compare the alternate system's theoretical response to the prescribed system's response.

(ii) *A technical description of the alternate system.* This section shall detail all of the hardware and software included in the alternate system. Dimensioned drawings, flow-charts, schematics, and component specifications shall be included. Any data manipulation (*i.e.* calculations) that the system performs shall be presented in this section.

(iii) *A description of the procedures used to operate the system including the level of training that an operator must have to achieve acceptable results.* This section of the application shall describe all of the installation, calibration, operation, and maintenance procedures in a step-by-step format. Note that empirical calibration with respect to another prescribed or approved measurement system is not acceptable. Calibration should be performed with NIST traceable standards, or equivalent national standards. Diagrams, schematics, and other graphics may be used to enhance the description.

(iv) *A comparison of results from the alternate system and from the prescribed system (or other system approved by the Administrator).* The two systems must be calibrated independently to NIST traceable standards or equivalent national standards for this comparison. While other statistical analyses may be acceptable, it is recommended that the comparison be based on a minimum of 7 collocated and simultaneous tests. This comparison shall be performed over the ''hot-start'' portion of the FTP test cycle. If the comparison is paired, it must demonstrate that the alternate system passes a two-sided, paired t-test described in this paragraph. If the test is unpaired, it must demonstrate that the alternate system passes a two-sided, unpaired t-test described in this paragraph. Other statistical criteria may be set by the Administrator. The average of these tests for the reference system must return results less than or equal to the applicable emissions standard. The t-test is performed as follows, where ''n'' equals the number of tests:

(A) Calculate the average of the alternate system results; this is A_{avg}.

(B) Calculate the average of the results of the system to which the alternate system was referenced; this is R_{avg}.

(C) For an unpaired comparison, calculate the ''n − 1'' standard deviation for the alternate and reference averages; these are A_{sd} and R_{sd} respectively. A_{sd} must be less than or equal to R_{sd}. If A_{sd} is greater than R_{sd}, the Administrator will not approve the application.

(D) For an unpaired comparison, calculate the t-value:

$$t_{unpaired} = (A_{avg} - R_{avg})/((A_{sd}^2 + R_{sd}^2)/n)^{1/2}$$

(E) For a paired comparison, calculate the ''n − 1'' standard deviation (squared) of the differences, d_i, between the paired results, where ''i'' represents the ith test of n number of tests:

$$S_D^2 = (Sd_i^2 - ((Sd_i)^2/n))/(n-1)$$

(F)(*1*) For a paired comparison, calculate the t-value:

$$t_{paired} = (A_{avg} - R_{avg})/(S_D^2/n)^{1/2}$$

(*2*) The absolute value of t must be less than the critical t value, t_{crit} at a 90% confidence interval for ''n − 1'' degrees of freedom. The following table lists 90% confidence interval t_{crit} values for n − 1 degrees of freedom:

90% Confidence interval critical t values vs. n − 1 degrees of freedom for a two-sided, paired t − test

n − 1	t_{crit}
6	1.94
7	1.89
8	1.86
9	1.83
10	1.81
11	1.80
12	1.78
13	1.77
14	1.76
15	1.75
16	1.75
17	1.74
18	1.73
19	1.73
20	1.72

28. Section 86.1309–90 is amended by revising the section heading and paragraph (a)(1) to read as follows:

§ 86.1309–90 Exhaust gas sampling system; Otto-cycle and non-petroleum-fueled engines.

(a)(1) *General.* The exhaust gas sampling system described in this paragraph is designed to measure the true mass of gaseous emissions in the exhaust of either gasoline-fueled, natural gas-fueled, liquefied petroleum gas-fueled or methanol-fueled engines. In the CVS concept of measuring mass emissions, two conditions must be satisfied; the total volume of the mixture of exhaust and dilution air must be measured, and a continuously proportioned volume of sample must be collected for analysis. Mass emissions are determined from the sample concentration and total flow over the test period.

* * * * *

29. A new section 86.1310–07 is added to Subpart N to read as follows:

§ 86.1310–2007 Exhaust gas sampling and analytical system for gaseous emissions from heavy-duty diesel-fueled engines and particulate emissions from all engines.

(a) *General.* The exhaust gas sampling system described in this paragraph is designed to measure the true mass of both gaseous and particulate emissions in the exhaust of heavy-duty diesel engines, and particulate emissions in the exhaust of all heavy-duty engines. (Gaseous emissions from non-petroleum-fueled diesel engines are measured using the system described in § 86.1309.) This system utilizes the CVS concept (described in § 86.1309) of measuring the combined mass emissions of THC, NO_X, CH_4 (if applicable) CO, CO_2 and particulate matter. For all emission measurement systems described in this section, multiple or redundant systems may be used during a single test. Statistical averages of data from multiple systems may be used to calculate test results, consistent with good engineering judgment. Weighted averages are allowed, where appropriate Statistical outliers may be discarded, but all results must be reported. If the Administrator determines that the statistical analysis is not consistent with good engineering judgment, he/she may determine compliance from the arithmetic mean of the results. A continuously integrated system may be used for THC, NO_X , CO and CO_2 measurement. The use of proportional bag sampling for sample integration is allowed for THC, NO_X, CO, and CO_2 measurement, but requirements specific to bag sampling from diesel exhaust must be met for the THC and NO_X emissions measurements. CH_4 measurement for calculation of NMHC (if applicable) is measured using GC–FID analysis of a proportional bag sample. The mass of gaseous emissions is determined from the sample concentration and total flow over the test period. The mass of particulate emissions is determined from a proportional mass sample collected on a filter and from the sample flow and total flow over the test period. As an option, the measurement of total fuel mass consumed over a cycle may be substituted for the exhaust measurement of CO_2. General requirements are as follows:

(1) This sampling system requires the use of a CVS The CVS system may use a PDP or a CFV. PDP systems must use a heat exchanger. CFV systems may use either a heat exchanger or electronic flow compensation. When electronic flow compensation is used, the CFV may be replaced by a subsonic venturi (SSV) as long as the CVS concept as defined in § 86.1309 is maintained (i.e., a constant volumetric flow-rate through the CVS is maintained for the duration of the test). Figure N07–1 is a schematic drawing of the CVS system.

(2) The THC analytical system for diesel engines requires a heated flame ionization detector (HFID) and heated sample system (191 ± 11 °C) using either:

(i) Continuously integrated measurement of diluted THC meeting the minimum requirements and technical specifications contained in paragraph (b)(3) of this section. Unless compensation for varying mass flow is made, a constant mass flow system must be used to ensure a proportional sample; or

(ii) Heated (191 ± 11 °C) proportional bag sampling systems for hydrocarbon measurement will be allowed if the bag sampling system meets the performance specifications for outgassing and permeability as defined in paragraph (b)(2) of this section.

(3) CH_4 measurement, if applicable, shall be conducted using a proportional bag sampling system with subsequent analysis using a gas chromatograph and FID. The CH_4 measurement shall be done in accordance with SAE Recommended Practice J1151, ''Methane Measurement Using Gas Chromatography'' (1994 SAE Handbook, Volume 1: Materials, Fuels, Emissions, and Noise, Section 13, Page 13.170), which is incorporated by reference pursuant to § 86.1(b)(2). As an alternative, the manufacturer may choose one of the options set forth in § 86.004–28(c)(8).

(4) [Reserved]

(5) [Reserved]

(6) The CO and CO_2 analytical system requires:

(i) Bag sampling (§ 86.1309) and analytical (§ 86.1311) capabilities, as shown in Figure N07–1; or

(ii) Continuously integrated measurement of diluted CO and CO_2 meeting the minimum requirements and technical specifications contained in paragraph (b)(5) of this section. Unless compensation for varying flow is made, a constant flow system must be used to ensure a proportional sample; and

(7) The NO_X analytical system requires:

(i) Continuously integrated measurement of diluted NO_X meeting the minimum requirements and technical specifications contained in paragraph (b)(5) of this section. Unless compensation for varying flow is made, a constant flow system must be used to ensure a proportional sample.

(ii) Bag sampling (§ 86.1309) and analytical (§ 86.1311) capabilities, as shown in Figure N07–1 (or Figure 07–2) will be allowed provided that sample gas temperature is maintained above the sample's aqueous dewpoint at all times during collection and analysis.

(8) The mass of particulate in the exhaust is determined via filtration. The particulate sampling system requires dilution of the exhaust to a temperature of 47 °C ± 5 °C, measured upstream of a single high-efficiency sample filter (as close to the filter as practical).

(9) Since various configurations can produce equivalent results, exact conformance with these drawings is not required. Additional components such as instruments, valves, solenoids, pumps, and switches may be used to provide additional information and coordinate the functions of the components of the system. Other components, such as snubbers, which are not needed to maintain accuracy on some systems, may be excluded if their exclusion is based upon good engineering judgment.

(10) Other sampling and/or analytical systems may be used if shown to yield equivalent results and if approved in advance by the Administrator (see § 86.1306–07).

(b) *Component description.* The components necessary for exhaust sampling shall meet the following requirements:

(1) *Exhaust dilution system.* The CVS shall conform to all of the requirements listed for the exhaust gas CVS systems in § 86.1309(b), (c), and (d). With respect to PM measurement, the intent of this measurement procedure is to perform the sample cooling primarily via dilution and mixing with air rather than via heat transfer to the surfaces of the sampling system. In addition the CVS must conform to the following requirements:

(i) The flow capacity of the CVS must be sufficient to maintain the diluted exhaust stream at the temperatures required for the measurement of particulate and hydrocarbon emission noted below and at, or above, the temperatures where aqueous condensation in the exhaust gases could occur. This is achieved by the following method. The flow capacity of the CVS must be sufficient to maintain the diluted exhaust stream in the primary dilution tunnel at a temperature of 191 °C or less at the sampling zone and as required to prevent condensation at any point in the dilution tunnel. Gaseous emission samples may be taken directly from this sampling point. An exhaust sample must then be taken at this point to be diluted a second time for use in determining particulate emissions. The secondary dilution system must provide sufficient secondary dilution air to maintain the double-diluted exhaust stream at a temperature of 47 C ± 5 C, measured at a point located between the filter face and 16 cm upstream of the filter face.

(ii) For the CVS , either a heat exchanger (*i.e.* CFV–CVS) or electronic flow compensation (*i.e.* EFC–CFV–CVS), which also includes the particulate sample flows is required Refer to Figure N07–1.

(iii) When a heat exchanger is used, the gas mixture temperature, measured at a point immediately ahead of the critical flow venturi, shall be within ±11 °C of the average operating temperature observed during the test with the simultaneous requirement that aqueous condensation does not occur. The temperature measuring system (sensors and readout) shall have an accuracy and precision of ±1.9 °C. For systems utilizing a flow compensator to maintain proportional sampling, the requirement for maintaining constant temperature is not necessary.

(iv) The primary dilution air and secondary dilution air:

(A) Shall have a primary and secondary dilution air temperature equal to or greater than 15 °C.

(B) Primary dilution air shall be filtered at the dilution air inlet. The manufacturer of the primary dilution air filter shall state that the filter design has successfully achieved a minimum particle removal efficiency of 98% (less than 0.02 penetration) as determined using ASTM test method F 1471–93 (incorporated by reference at section 86.1). Secondary dilution air shall be filtered at the dilution air inlet using a high-efficiency particulate air filter (HEPA). The HEPA filter manufacturer shall state the HEPA filter design has successfully achieved a minimum particle removal efficiency of 99.97% (less than 0.0003 penetration) as determined using ASTM test method F 1471–93. It is recommended that the primary dilution air be filtered using a HEPA filter. EPA intends to utilize HEPA filters to condition primary dilution air in its test facilities. It is acceptable to use of a booster blower upstream or downstream of a HEPA filter in the primary dilution tunnel (and upstream of the introduction of engine exhaust into the CVS) to compensate for the additional pressure loss associated with the filter. The design of any booster blower located downstream of the filter should minimize the introduction of additional particulate matter into the CVS.

(C) Primary dilution air may be sampled to determine background particulate levels, which can then be subtracted from the values measured in the diluted exhaust stream. In the case of primary dilution air, the background particulate filter sample shall be taken immediately downstream of the dilution air filter and upstream of the engine exhaust flow (Figure N07–1). The provisions of paragraphs (b)(7) of this section, and of § 86.1312–2007 also apply to the measurement of background particulate matter, except that the filter temperature must be maintained below 52 °C.

(2) *Heated proportional bag sampling systems.* If a heated (191 ± 11 °C) proportional bag sampling system is used for THC measurement, sample bags must demonstrate minimal outgassing and permeability by passing the following performance test:

(i) Performance test for sample bag HC outgassing and CO_2 permeability. Bring the bag system to its operational temperature. Fill the heated sample bag with a nominal mixture of 1% CO_2 in

N_2. Perform an initial measurement of CO_2 and THC from the sample bag, and repeat the measurement after one hour. Acceptable performance criteria are <2% decrease of the initial CO_2 reading and <1 ppmC THC.

(ii) [Reserved]

(3) *Continuous HC measurement system.* (i) The continuous HC sample system (as shown in Figure N07–1) uses an ''overflow'' zero and span system. In this type of system, excess zero or span gas spills out of the probe when zero and span checks of the analyzer are made. The ''overflow'' system may also be used to calibrate the HC analyzer per § 86.1321(b), although this is not required.

(ii) No other analyzers may draw a sample from the continuous HC sample probe, line or system, unless a common sample pump is used for all analyzers and the sample line system design reflects good engineering practice.

(iii) The overflow gas flow rates into the sample line shall be at least 105% of the sample system flow rate.

(iv) The overflow gases shall enter the heated sample line as close as practicable to the outside surface of the CVS duct or dilution tunnel.

(v) The continuous HC sampling system shall consist of a probe (which must raise the sample to the specified temperature) and, where used, a sample transfer system (which must maintain the specified temperature). The continuous hydrocarbon sampling system (exclusive of the probe) shall:

(A) Maintain a wall temperature of 191°C ± 11°C as measured at every separately controlled heated component (*i.e.*, filters, heated line sections), using permanent thermocouples located at each of the separate components.

(B) Have a wall temperature of 191°C ± 11°C over its entire length. The temperature of the system shall be demonstrated by profiling the thermal characteristics of the system at initial installation and after any major maintenance performed on the system. The temperature profile of the HC sampling system shall be demonstrated by inserting thermocouple wires (typically Teflon™ coated for ease of insertion) into the sampling system assembled in-situ where possible, using good engineering judgment. The wire should be inserted up to the HFID inlet. Stabilize the sampling system heaters at normal operating temperatures. Withdraw the wires in increments of 5 cm to 10 cm (2 inches to 4 inches) including all fittings. Record the stabilized temperature at each position. The system temperature will be monitored during testing at the locations and temperature described in § 86.1310–90(b)(3)(v)(A).

Note: It is understood that profiling of the sample line can be done under flowing conditions also as required with the probe. This test may be cumbersome if test facilities utilize long transfer lines and many fittings; therefore it is recommended that transfer lines be kept as short as possible and the use of fittings should be kept minimal.

(C) Maintain a gas temperature of 191°C ±11°C immediately before the heated filter and HFID. These gas temperatures will be determined by a temperature sensor located immediately upstream of each component.

(vi) The continuous hydrocarbon sampling probe shall:

(A) Be defined as the first 25.4 cm (10 in) to 76.2 cm (30 in) of the continuous hydrocarbon sampling system;

(B) Have a 0.483 cm (0.19 in) minimum inside diameter;

(C) Be installed in the primary dilution tunnel at a point where the dilution air and exhaust are well mixed (*i.e.*, approximately 10 tunnel diameters downstream of the point where the exhaust enters the dilution tunnel);

(D) Be sufficiently distant (radially) from other probes and the tunnel wall so as to be free from the influence of any wakes or eddies; and

(E) Increase the gas stream temperature to 191°C ± 11°C by the exit of the probe. The ability of the probe to accomplish this shall be demonstrated at typical sample flow rates using the insertion thermocouple technique at initial installation and after any major maintenance. Compliance with the temperature specification shall be demonstrated by monitoring during each test the temperature of either the gas stream or the wall of the sample probe at its terminus.

(vii) The response time of the continuous measurement system shall be no greater than:

(A) 1.5 seconds from an instantaneous step change at the port entrance to the analyzer to within 90 percent of the step change;

(B) 10 seconds from an instantaneous step change at the entrance to the sample probe or overflow span gas port to within 90 percent of the step change. Analysis system response time shall be coordinated with CVS flow fluctuations and sampling time/test cycle offsets if necessary; and

(C) For the purpose of verification of response times, the step change shall be at least 60 percent of full-scale chart deflection.

(4) *Primary-dilution tunnel.* (i) The primary dilution tunnel shall be:

(A) Small enough in diameter to cause turbulent flow (Reynolds Number greater than 4000) and of sufficient length to cause complete mixing of the exhaust and dilution air. Good engineering judgment shall dictate the use of mixing plates and mixing orifices to ensure a well-mixed sample. To verify mixing, EPA recommends flowing a tracer gas (*i.e.* propane or CO_2) from the raw exhaust inlet of the dilution tunnel and measuring its concentration at several points along the axial plane at the sample probe. Tracer gas concentrations should remain nearly constant (*i.e.* within 2%) between all of these points.

(B) At least 8 inches (20 cm) in diameter.

(C) Constructed of electrically conductive material which does not react with the exhaust components.

(D) Electrically grounded.

(E) EPA recommends that the tunnel should have minimal thermal capacitance such that the temperature of the walls tracks with the temperature of the diluted exhaust.

(ii) The temperature of the diluted exhaust stream inside of the primary dilution tunnel shall be sufficient to prevent water condensation.

(iii) The engine exhaust shall be directed downstream at the point where it is introduced into the primary dilution tunnel.

(5) *Continuously integrated NO_X, CO, and CO2 measurement systems.* (i) The sample probe shall:

(A) Be in the same plane as the continuous HC probe, but shall be sufficiently distant (radially) from other probes and the tunnel wall so as to be free from the influences of any wakes or eddies; and

(B) Heated and insulated over the entire length, to prevent water condensation, to a minimum temperature of 131°F (55° C). Sample gas temperature immediately before the first filter in the system shall be at least 131° F (55° C).

(ii) The continuous NO_X, CO, or CO2 sampling and analysis system shall conform to the specifications of subpart D of this part, with the following exceptions:

(A) The system components required to be heated by subpart D need only be heated to prevent water condensation, the minimum component temperature shall be 131° F (55° C);

(B) The system response defined in § 86.329–79 shall be no greater than 10 seconds. Analysis system response time shall be coordinated with CVS flow fluctuations and sampling time/test cycle offsets, if necessary;

(C) Alternative NO_X measurement techniques outlined in § 86.346–79 are

not permitted for NO_X measurement in this subpart;

(D) All analytical gases shall conform to the specifications of § 86.1314;

(E) Any range on a linear analyzer below 100 ppm shall have and use a calibration curve conforming to § 86. 1323–07; and

(F) The measurement accuracy requirements are specified in § 86. 1338–07 .

(iii) The signal output of analyzers with non-linear calibration curves shall be converted to concentration values by the calibration curve(s) specified in subpart D of this part (§ 86.330–79) before flow correction (if used) and subsequent integration takes place.

(6) *Particulate sampling system.* This method collects a proportional sample from the primary tunnel, and then transfers this sample to a secondary dilution tunnel where the sample is further diluted. The double-diluted sample is then passed through the collection filter. Proportionality (i.e., mass flow ratio) between the primary tunnel flow rate and the sample flow rate must be maintained within ±5%, excluding the first 10 seconds of the test at start-up. The requirements for this system are:

(i) The particulate sample transfer tube shall be configured and installed so that:

(A) The inlet faces upstream in the primary dilution tunnel at a point where the primary dilution air and exhaust are well mixed.

(B) The particulate sample exits on the centerline of the secondary tunnel.

(ii) The entire particulate sample transfer tube shall be:

(A) Sufficiently distant (radially) from other sampling probes (in the primary dilution tunnel) so as to be free from the influence of any wakes or eddies produced by the other probes.

(B) 0.85 cm minimum inside diameter.

(C) No longer than 36 in (91 cm) from inlet plane to exit plane.

(D) Designed to minimize the diffusional and thermophoretic deposition of particulate matter during transfer (i.e., sample residence time in the transfer tube should be as short as possible, temperature gradients between the flow stream and the transfer tube wall should be minimized). Double-wall, thin-wall, air-gap insulated, or a controlled heated construction for the transfer tube is recommended.

(E) Constructed such that the surfaces exposed to the sample shall be an electrically conductive material, which does not react with the exhaust components, and this surface shall be electrically grounded so as to minimize electrostatic particulate matter deposition.

(iii) The secondary dilution air shall be at a temperature equal to or greater than 15° C.

(iv) The secondary-dilution tunnel shall be constructed such that the surfaces exposed to the sample shall be an electrically conductive material, which does not react with the exhaust components, and this surface shall be electrically grounded so as to minimize electrostatic particulate deposition.

(v) Additional dilution air must be provided so as to maintain a sample temperature of 47° C ± 5° C upstream of the sample filter. Temperature shall be measured with a thermocouple with a 3⁄16″ shank, having thermocouple wires with a gage diameter 24 AWG or smaller, a bare-wire butt-welded junction; or other suitable temperature measurement with an equivalent or faster time constant and an accuracy and precision of ± 1.9° C.

(vi) The filter holder assembly shall be located within 12.0 in (30.5 cm) of the exit of the secondary dilution tunnel.

(vii) The face velocity through the sample filter shall not exceed 100 cm/s (face velocity is defined as the standard volumetric sample flow rate (i.e., scm3/sec) divided by the sample filter stain area (i.e., cm2)).

(7) *Particulate sampling.* (i) *Filter specifications.* (A) Polytetrafluoroethylene (PTFE or Teflon™) coated borosilicate glass fiber high-efficiency filters or polytetrafluoroethylene (PTFE or Teflon™) high-efficiency membrane filters with an integral support ring of polymethylpentene (PMP) or equivalent inert material are required. Filters shall have a minimum clean filter efficiency of 99% as measured by the ASTM D2986–95a DOP test (incorporated by reference at § 86.1).

(B) Particulate filters must have a diameter of 46.50 ± 0.6 mm (38 mm minimum stain diameter).

(C) The dilute exhaust is simultaneously sampled by a single high-efficiency filter during the cold-start test and by a second high efficiency filter during the hot-start test.

(D) It is recommended that the filter loading should be maximized consistent with temperature requirements.

(ii) *Filter holder assembly.* The filter holder assembly shall comply with the specifications set forth for ambient PM measurement in 40 CFR Part 50, Appendix L 7.3.5, figures L–25 and L–26, with the following exceptions:

(A) The material shall be 302, 303, or 304 stainless steel instead of anodized aluminum.

(B) The 2.84 cm diameter entrance to the filter holder may be adapted, using sound engineering judgment and leak-free construction, to an inside diameter no smaller than 0.85 cm, maintaining the 12.5° angle from the inlet of the top filter holder to the area near the sealing surface of the top of the filter cartridge assembly. Figure N07–2 shows acceptable variation from the design in 40 CFR Part 50, Appendix L. Similar variations using sound engineering design are also acceptable provided that they provide even flow distribution across the filter media and a similar leak-free seal with the filter cartridge assembly.

(C) If additional or multiple filter cartridges are stored in a particulate sampler as part of an automatic sequential sampling capability, all such filter cartridges, unless they are installed in the sample flow (with or without flow established) shall be covered or sealed to prevent communication of semi-volatile matter from filter to filter; contamination of the filters before and after sampling; or loss of volatile or semi-volatile particulate matter after sampling.

(iii) *Filter cartridge assembly.* The filter cartridge assembly shall comply with the specifications set forth for ambient PM measurement in 40 CFR Part 50, Appendix L 7.3.5, figures L–27, L–28, and L–29, with the following exceptions:

(A) In addition to the specified Delrin™ material, 302, 303, or 304 stainless steel, polycarbonate or acrylonitrile/butadiene/styrene (ABS) resin, or a combination of these materials may also be used.

(B) A bevel introduced on the inside diameter of the entrance to the filter cartridge, as used by some commercially available automated sequential particulate filter cartridge changers, is also acceptable (see Figure N07–3).

(iv) *Particle preclassifier.* A particle preclassifier shall be installed immediately upstream of the filter holder assembly (N07–1). The purpose of the preclassifier is to remove coarse, mechanically generated particles (e.g., rust from the engine exhaust system or carbon sheared from the sampling system walls) from the sample flow stream while allowing combustion-generated particles to pass through to the filter. The preclassifier may be either an inertial impactor or a cyclonic separator. The preclassifier manufacturer 50% cutpoint particle diameter shall be between 2.5 μm and 10 μm at the volumetric flow rate selected for sampling of particulate matter emissions. Sharpness of cut is not specifically defined, but the

preclassifier geometry shall allow at least 99% of the mass concentration of 1 μm particles to pass through the exit of the preclassifier to the filter at the volumetric flow rate selected for sampling particulate matter emissions. Periodic servicing of the preclassifier will be necessary to prevent a buildup of mechanically separated particles. The particle preclassifier may be made integral with the top of the filter holder assembly. The preclassifier may also be made integral with a mixing-tee for introduction of secondary dilution air, thus replacing the secondary dilution tunnel; provided that the preclassifier provides sufficient mixing.

BILLING CODE 6560–50–P

Figures to § 86.1310-2007

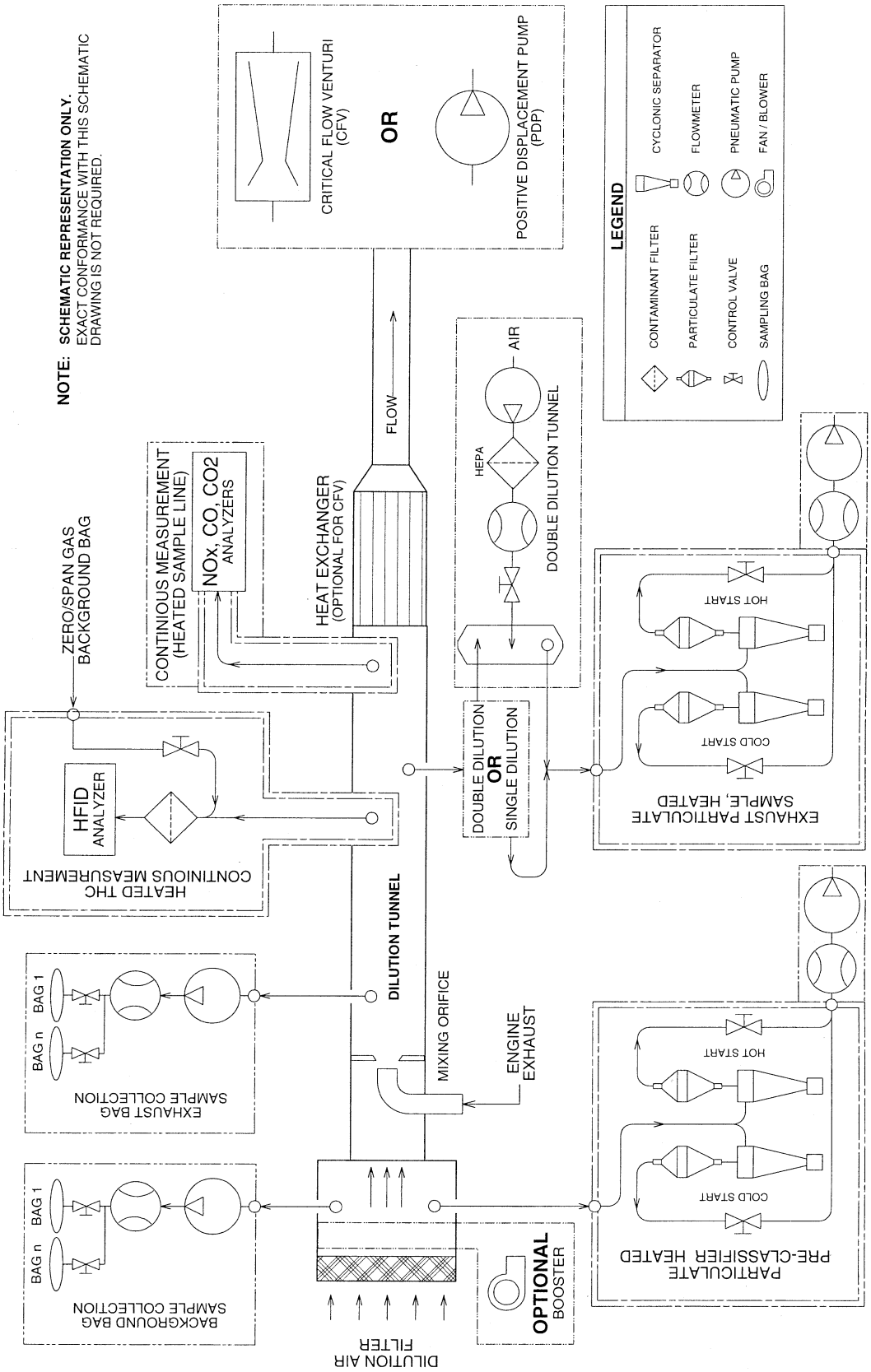

N07-1 GASEOUS AND PARTICULATE EMISSIONS SAMPLING SYSTEM (PDP - CFV CONSTANT VOLUME SAMPLER)

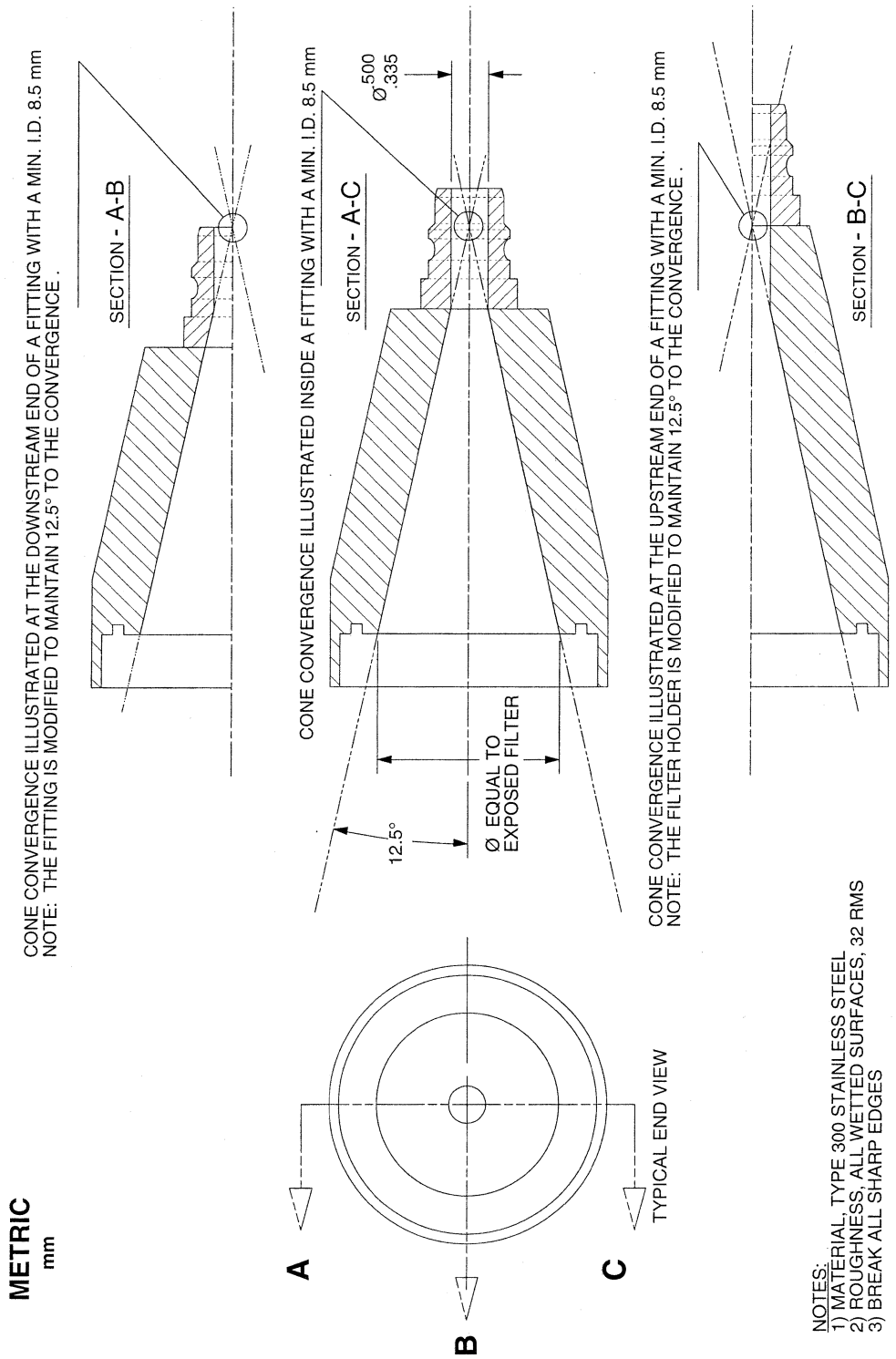

N07-2 FILTER HOLDER GEOMETRY

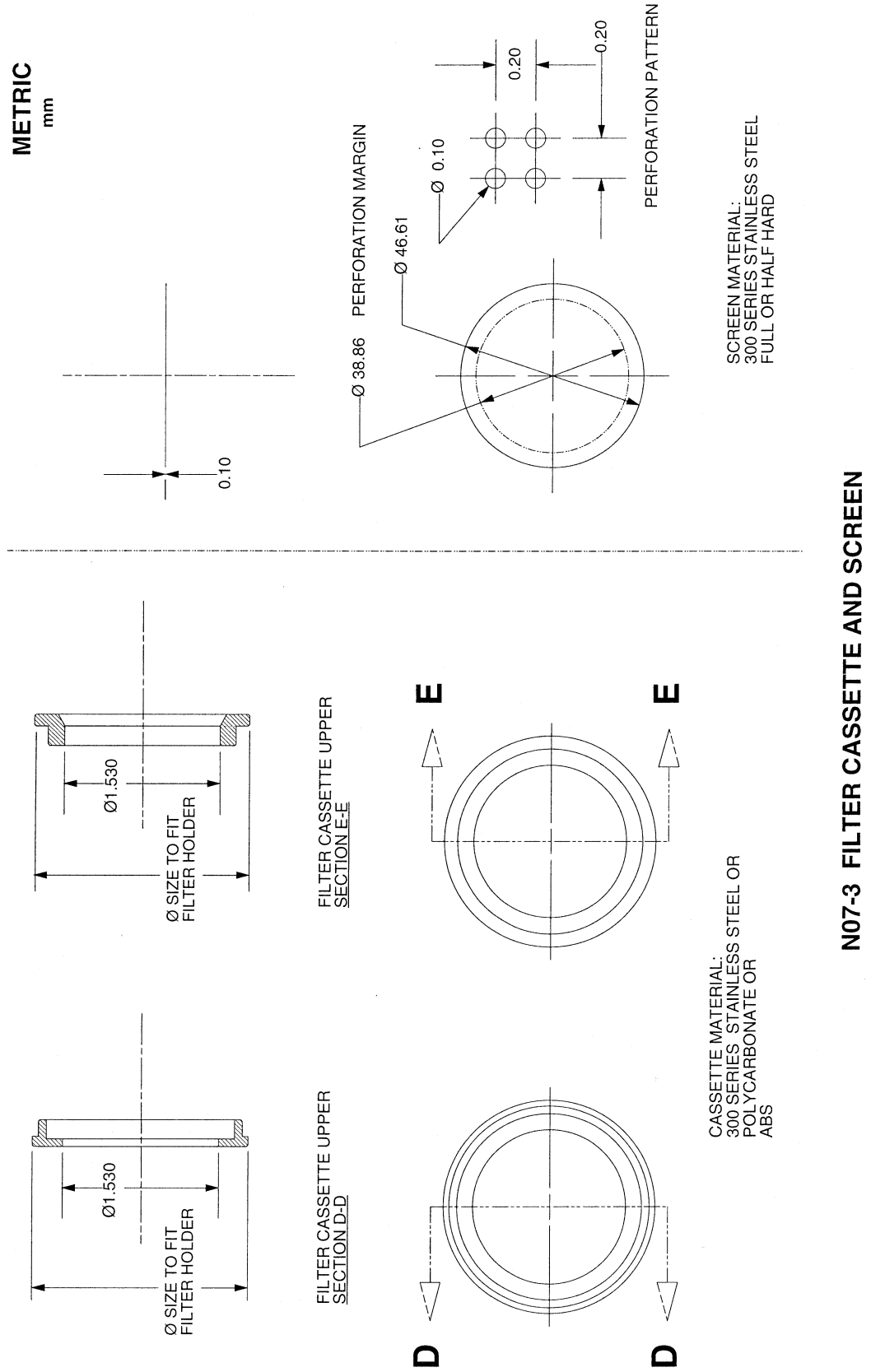

N07-3 FILTER CASSETTE AND SCREEN

BILLING CODE 6560–50–C

30. A new section 86.1312–2007 is added to Subpart N to read as follows:

§ 86.1312–2007 Filter stabilization and microbalance workstation environmental conditions, microbalance specifications, and particulate matter filter handling and weighing procedures.

(a) *Ambient conditions for filter stabilization and weighing.*—(1) *Temperature and humidity.* (i) The filter stabilization environment shall be maintained at 22 °C ± 3 °C and a dewpoint of 9.5 °C ± 1 °C. Dewpoint shall be measured with an instrument that exhibits an accuracy of at least ±0.25 °C NIST traceable as stated by the instrument manufacturer. Temperature shall be measured with an instrument that exhibits an accuracy of at least ±0.2°C or better.

(ii) The immediate microbalance workstation environment shall be maintained at 22 °C ± 1 °C and a dewpoint of 9.5 °C ± 1 °C. If the microbalance workstation environment freely circulates with the filter stabilization environment, and this entire environment meets 22 °C ± 1 °C and a dewpoint of 9.5 °C ± 1 °C , then there is no requirement to measure temperature and dewpoint at the microbalance separate from the filter stabilization location. Otherwise, temperature at the microbalance workstation shall be measured with an instrument that exhibits an accuracy of at least ±0.2°C or better, and dewpoint shall be measured with an instrument that exhibits an accuracy of at least ±0.25 °C NIST traceable as stated by the instrument manufacturer.

(2) *Cleanliness.* (i) The microbalance and filter stabilization environments shall be free of ambient contaminants (such as dust or other aerosols) that could settle on the particulate filters. It is recommended that these environments be built to conform with the Class 1000 specification (or cleaner) as determined by Federal Standard 209D or 209E for clean room classification (Available from the Institute of Environmental Standards and Technology website at *www.iest.org* or phone (847) 255–1561). An alternative recommendation would be to equilibrate and/or weigh the filters within a separate, smaller, particle-free, temperature and humidity-controlled chamber (*i.e.,* ''glove box'').

(ii) Reference filters shall be used to monitor for gross particle contamination. It is required that at least two unused reference filters remain in the filter stabilization environment at all times in partially covered glass petri dishes, as in paragraph (c) (1) of this section. These reference filters shall be placed in the filter stabilization environment. The reference filters shall be weighed within 2 hours of, but preferably at the same time as, the sample filters. The reference filters shall be changed at least once a month, but never while any sample filters are between their tare weight (pre-sampling) and gross weight (post-sampling) measurements. The reference filters shall be the same size and material as the sample filters.

(3) *Quality control of ambient conditions.* (i) If, before the start of a weighing session, the temperature or dewpoint of the filter stabilization environment are not within specifications, then filters must remain in the environment for at least 30 minutes after conditions are corrected. If the filter stabilization environment changes during a weighing session such that the specifications are no longer met, the weighing session shall be suspended until the environment has returned to within specifications for at least 30 minutes. Once the environment has returned to within specifications for at least 30 minutes, the reference filters shall be reweighed and the criteria in paragraph (a)(3)(ii) of this section shall apply. Note that temperature and dewpoint shall be sampled once per second, and an unweighted 5-minute moving average of this data shall be calculated once per second. This moving average shall be used to determine the environment temperature and dewpoint for the purpose of determining whether or not the environment is within specifications.

(ii) If the average change in weight of the reference filters is more than 10 micrograms (after correcting for buoyancy as described in paragraph (c)(3) of this section), then all filters in the process of stabilization shall be discarded and all data collected with respect to the discarded filters shall be considered void. Note that more than 2 reference filters may be used to achieve a more robust average of the change in weight of the reference filters.

(b) *Microbalance specifications.* The microbalance used to determine the weights of all filters shall have a precision (standard deviation) of at least ±0.25 micrograms or better for repeated weighing of a calibration weight, a precision of at least ±2.5 micrograms or better for repeated weighing of a clean filter, and a readability equal to or less than 0.1 micrograms. It is recommended that the microbalance be installed on a vibration isolation platform to isolate the microbalance's load cell from external vibration. It is also recommended that the microbalance should be shielded from convective airflow by means of an electrically grounded static dissipative draft shield. Microbalance manufacturer specifications for all preventive maintenance, periodic certification, calibration, and re-zeroing shall be followed. All certification and calibration procedures shall be NIST traceable, or traceable to an equivalent national standard.

(c) *Particulate matter filter handling and weighing.* Care should be taken to prevent contamination of the sample filters and to prevent a buildup of static charge on the filters that could interfere with filter weighing. Static neutralizers, such as Po-210 sources, shall be used to neutralize charge on a filter prior to each weighing. A static neutralizer should be replaced at the interval recommended by its manufacturer, or when it is no longer able to reduce static charge on a filter to less than ±2 VDC as measured with an electrostatic monitor at the microbalance workstation. The person weighing filters shall be grounded with respect to the microbalance to prevent imparting a static charge on the filters. This can be accomplished safely by using a grounding strap such as the wrist straps that are commonly used in the microelectronics industry, or by connecting a similar grounding strap to the tweezers. To prevent electrical shock, a 1-megohm resistor should be installed in series between the person weighing filters and ground.

(1) Within the filter stabilization environment, a pair of clean and electrically conductive tweezers shall be used to place a filter in the lower half of a filter cassette and the cassette shall be placed in a partially open glass petri dish. The petri dish lid should extend over the filter to prevent gross contamination, but it should be left slightly open on one edge to permit stabilization with the environment for at least 30 minutes.

(2) After at least 30 minutes of stabilization, each filter shall be weighed using the specified microbalance. The process of weighing a filter may be repeated and a statistical mean weight of a single filter may be calculated. Sound engineering judgment shall dictate the use of statistics to discard outliers and the weighting of averages. For a clean filter its single weight or statistical mean weight shall be considered the uncorrected tare weight of the filter.

(3) All filter weights shall be corrected for filter buoyancy in air. For the uncorrected tare weight of a filter, this calculated value is the corrected tare weight of the filter, and it must be recorded (see § 86.1344(e)(18)).

Barometric pressure of the microbalance environment shall be measured with an instrument that exhibits ±0.01% full-scale accuracy and 0.01% per-year full scale stability, and the full-scale value used for such a specification shall not exceed 200 kPa.

(i) Buoyancy correction calculation. (A) Calculate vapor pressure of liquid water using the dewpoint temperature in the Magnus formula:

$P_w = 0.6113 \times 10\wedge ((7.5 \times T_{dp})/(237.3 + T_{dp}))$

Where:

P_w=vapor pressure of liquid water, kPa.
T_{dp}=dewpoint temperature, °C.

(B) Calculate air density using the ideal gas relationship and molecular weights of standard air and water:

$A=(3.484\times P - 1.317\times P_w)/(T+273.15)$

Where:

A=air density, kg/m³.
P=barometric pressure, kPa.
P_w=vapor pressure of liquid water, kPa.
T=temperature, °C.

(C) Buoyancy correction:

$M=R\times(1-(A/\rho_w))/(1-(A/\rho_s))$.

Where:

M=corrected mass in units of the balance display.
R=uncorrected filter weight in units of the balance display.
A=calculated air density, kg/m³.
ρ_w=density of calibration weight used to calibrate the balance, kg/m³.
ρ_s=density of filter material used to sample PM emissions, kg/m³.

(ii) For determining ρ_s note that PTFE (Teflon™) and borosilicate glass both have densities in the range of 2,200 to 2,400 kg/m³. Therefore, for PTFE-coated borosilicate glass fiber filters, an acceptable ρ_s is 2,300 kg/m³. Note also that polymethylpentene has a density of 850 kg/m³. Because Teflon PTFE membrane filters have an integral polymethylpentene support ring that accounts for 95% of the filter mass, an acceptable ρ_s for these filters is 920 kg/m³. Other ρ_s values for other filters may be obtained similarly. Information about ''ρ_s should be available from the calibration weight manufacturer.

(iii) This paragraph (c)(3)(iii) shows an example of the buoyancy correction. This example assumes the following inputs: Barometric pressure (P)=101.325 kPa, temperature (T)=22.0 °C, dewpoint temperature (T_{dp})=9.5 °C, balance display (R)=100.0000 mg, calibration weight density (ρ_w)=8,000 kg/m³, and filter material density (ρ_s)=2,300 kg/m³. Then:

(A) The water vapor pressure (P_w) is calculated as:

$P_w = 0.6113 \times 10\ ((7.5 \times 9.5)/(237.3 + 9.5)) = 1.186$ kPa.

(B) The air density (A) is calculated as:

$A = (3.484 \times 101.325 - 1.317 \times 1.186)/(22.0 + 273.15) = 1.191$ kg/m³.

(C) The corrected mass (M) is calculated as:

$M=100.0000 \times (1 - (1.191/8000))/(1 - (1.191/2300)) = 100.0369$ mg.

(4) The uncorrected weight, corrected weight, barometric pressure, temperature and humidity, of the filter shall be recorded. Afterward the filter shall be returned to the lower half of the filter cassette, and the upper half of the cassette shall be set in place. The cassette-with filter-shall then be stored in a covered glass petri dish or a sealed (*i.e.,* ends plugged) filter holder assembly, either of which shall remain in the filter stabilization environment until needed for testing. It is recommended that the filter be transported between the filter stabilization environment and the location of the emissions test within a sealed filter holder assembly.

(5) After the emissions test, the filter cassette shall be removed from the filter holder assembly. If this removal is performed in the filter stabilization environment, the upper half of the cassette shall be removed using a properly designed separator tool, the lower half of the cassette-with filter-shall be placed in a partially covered petri dish, and allowed to stabilize for at least 30 minutes. Otherwise, the cassette and filter shall be placed in a closed petri dish until it can be returned to the filter stabilization environment. Once the closed petri dish is returned to the filter stabilization environment, the petri dish shall be opened, the upper half of the cassette shall be removed using a properly designed separator tool, the lower half of the cassette-with filter-shall be placed in a partially covered petri dish, and allowed to stabilize for at least one hour.

(6) After at least 30 minutes, but no more than 60 hours of stabilization, each filter may be weighed using the specified microbalance. The process of weighing a filter may be repeated and a statistical mean may be calculated. Sound engineering judgment shall dictate the use of statistics to discard outliers and the weighting of averages. For a used filter, its single weight or statistical mean weight shall be identified as the uncorrected gross weight of the filter. The uncorrected gross weight shall be corrected for filter buoyancy using the procedure in (c)(3) of this section. The uncorrected gross filter weight, corrected gross filter weight, barometric pressure, temperature, and dewpoint shall be recorded.

(7) The net particulate matter weight (Pf) of each filter shall be equal to the corrected gross filter weight minus the corrected tare filter weight.

(8) Should the particulate matter on the filters contact the petri dish, tweezers, microbalance or any other surface, the data with respect to that filter is void.

31. A new § 86.1313–2004 is added to subpart N to read as follows:

§ 86.1313–2004 Fuel specifications.

Section 86.1313–04 includes text that specifies requirements that differ from § 86.1313–94 and § 86.1313–98. Where a paragraph in § 86.1313–94 or § 86.1313–98 is identical and applicable to § 86.1313–04, this may be indicated by specifying the corresponding paragraph and the statement ''[Reserved]. For guidance see § 86.1313–94.'' or ''[Reserved]. For guidance see § 86.1313–98.''.

(a) *Gasoline fuel.* (1) Gasoline having the following specifications will be used by the Administrator in exhaust and evaporative emission testing of petroleum-fueled Otto-cycle engines, except that the Administrator will not use gasoline having a sulfur specification higher than 0.0045 weight percent. Gasoline having the following specification or substantially equivalent specifications approved by the Administrator, must be used by the manufacturer in exhaust and evaporative testing except that octane specifications do not apply:

Item	ASTM test method No.	Value
(i) Octane, Research, Min.	D2699	93
(ii) Sensitivity, Min.		7.5
(iii) Lead (organic), maximum: g/U.S. gal. (g/liter)	D3237	0.050 (0.013)
(iv) Distillation Range:	D86	
(A) IBP [1]: °F (°C)		75–95 (23.9–35)
(B) 10 pct. point: °F (°C)		120–135 (48.9–57.2)

Item	ASTM test method No.	Value
(C) 50 pct. point: °F (°C)		200–230 (93.3–110)
(D) 90 pct. point: °F (°C)		300–325 (148.9–162.8)
(E) EP, max: °F (°C)		415 (212.8)
(v) Sulfur, weight pct.	D1266	0.0015–0.008
(vi) Phosphorous, max. g/U.S. gal (g/liter)	D3231	0.005 (0.0013)
(vii) RVP [2, 3]	D3231	8.7–9.2 (60.0–63.4)
(viii) Hydrocarbon composition:	D1319	
(A) Olefins, max. pct.		10
(B) Aromatics, max, pct.		35
(C) Saturates		Remainder

[1] For testing at altitudes above 1,219 m (4000 feet), the specified range is 75–105 deg. F (23.9–40.6 deg. C).
[2] For testing which is unrelated to evaporative emission control, the specified range is 8.0–9.2 psi (55.2–63.4 kPa).
[3] For testing at altitudes above 1,219 m (4000 feet), the specified range is 7.6–8.0 psi (52–55 kPa).

(2) For engines certified for sale in the 50 United States, ''California Phase 2'' gasoline having the specifications listed in the table in this section may be used in exhaust emission testing as an option to the specifications in paragraph (a)(1) of this section. If a manufacturer elects to utilize this option, the manufacturer must conduct exhaust emission testing with gasoline having the specifications listed in the table in this paragraph (a)(2). However, the Administrator may use or require the use of test fuel meeting the specifications in paragraph (a)(1) of this section for certification confirmatory testing, selective enforcement auditing and in-use testing. All fuel property test methods for this fuel are contained in Chapter 4 of the California Regulatory Requirements Applicable to the National Low Emission Vehicle Program (October, 1996). These requirements are incorporated by reference (see § 86.1). The table follows:

Fuel property	Limit
(i) Octane, (R+M)/2 (min)	91
(ii) Sensitivity (min)	7.5
(iii) Lead, g/gal (max) (No lead added)	0–0.01
(iv) Distillation Range, °F:	
(A) 10 pct. point,	130–150
(B) 50 pct. point,	200–210
(C) 90 pct. point,	290–300
(D) EP, maximum	390
(v) Residue, vol % (max)	2.0
(vi) Sulfur, ppm by wt.	15–40, except that Administrator may use and approve for use, lower ranges where such ranges are consistent with current California requirements.
(vii) Phosphorous, g/gal (max)	0.005
(viii) RVP, psi	6.7–7.0
(ix) Olefins, vol %	4.0–6.0
(x) Total Aromatic Hydrocarbons (vol %)	22–25
(xi) Benzene, vol %	0.8–1.0
(xii) Multi-Substituted Alkyl Aromatic Hydrocarbons, vol %	12–14
(xiii) MTBE, vol %	10.8–11.2
(xiv) Additives	See Chapter 4 of the California Regulatory Requirements Applicable to the National Low Emission Vehicle Program (October, 1996). These procedures are incorporated by reference (see § 86.1).
(xv) Copper Corrosion	No. 1
(xvi) Gum, Washed, mg/100 ml (max)	3.0
(xvii) Oxidation Stability, minutes (min)	1000
(xviii) Specific Gravity	No limit; report to purchaser required
(xix) Heat of Combustion	No limit; report to purchaser required
(xx) Carbon, wt %	No limit; report to purchaser required
(xxi) Hydrogen, wt %	No limit; report to purchaser required

(3)(i) Unless otherwise approved by the Administrator, unleaded gasoline representative of commercial gasoline that will be generally available through retail outlets must be used in service accumulation. Unless otherwise approved by the Administrator, this gasoline must have a minimum sulfur content of 15 ppm. Unless otherwise approved by the Administrator, fuel used for evaporative emission durability demonstration must contain ethanol as required by § 86.1824–01(a)(2)(iii). Leaded gasoline must not be used in service accumulation.

(ii) Unless otherwise approved by the Administrator, the octane rating of the gasoline used must be no higher than 1.0 Retail octane number above the lowest octane rating that meets the fuel grade the manufacturer will recommend to the ultimate purchaser for the relevant production vehicles. If the manufacturer recommends a Retail octane number rather than a fuel grade, then the octane rating of the service accumulation gasoline can be no higher than 1.0 Retail octane number above the recommended Retail octane number. The service accumulation gasoline must

also have a minimum sensitivity of 7.5 octane numbers, where sensitivity is defined as the Research octane number minus the Motor octane number.

(iii) The Reid Vapor Pressure of the gasoline used must be characteristic of the motor fuel used during the season in which the service accumulation takes place.

(4) The specification range of the gasoline to be used under paragraph (a) of this section must be reported in accordance with § 86.094–21(b)(3).

(b) heading and (b)(1) [Reserved]. For guidance see § 86.1313–94.

(b)(2) [Reserved]. For guidance see § 86.1313–98.

(b)(3) through (g) [Reserved]. For guidance see § 86.1313–94.

32. A new § 86.1313–2007 is added to Subpart N to read as follows:

§ 86.1313–2007 Fuel specifications.

Section 86.1313–2007 includes text that specifies requirements that differ from § 86.1313–94 and § 86.1313–2004. Where a paragraph in § 86.1313–94 or § 86.1313–2004 is identical and applicable to § 86.1313–2007, this may be indicated by specifying the corresponding paragraph and the statement ''[Reserved]. For guidance see § 86.1313–94.'' or ''[Reserved]. For guidance see § 86.1313–04.''.

(a) [Reserved]. For guidance see § 86.1313–2004.

(b) heading and (b)(1) [Reserved]. For guidance see § 86.1313–94.

(b)(2) Petroleum fuel for diesel engines meeting the specifications in Table N07–2, or substantially equivalent specifications approved by the Administrator, shall be used in exhaust emissions testing. The grade of petroleum fuel used shall be commercially designated as ''Type 2-D'' grade diesel fuel except that fuel commercially designated as ''Type 1-D'' grade diesel fuel may be substituted provided that the manufacturer has submitted evidence to the Administrator demonstrating to the Administrator's satisfaction that this fuel will be the predominant in-use fuel. Such evidence could include such things as copies of signed contracts from customers indicating the intent to purchase and use ''Type 1-D'' grade diesel fuel as the primary fuel for use in the engines or other evidence acceptable to the Administrator. (Note: Vehicles certified under § 86.007–11(f) must be tested using the test fuel specified in § 86.1313–2004, unless otherwise allowed by the Administrator.) Table N07–2 follows:

TABLE N07–2

Item		ASTM test method No.	Type 1–D	Type 2–D
(i) Cetane Number		D613	40–54	40–50
(ii) Cetane Index		D976	40–54	40–50
(iii) Distillation range:				
(A) IBP	°F	D86	330–390	340–400
	(°C)		(165.6–198.9)	(171.1–204.4)
(B) 10 pct. point	°F	D86	370–430	400–460
	(°C)		(187.8–221.1)	(204.4–237.8)
(C) 50 pct. point	°F	D86	410–480	470–540
	(°C)		(210.0–248.9)	(243.3–282.2)
(D) 90 pct. point	°F	D86	460–520	560–630
	(°C)		(237.8–271–1)	(293.3–332.2)
(E) EP	°F	D86	500–560	610–690
	(°C)		(260.0–293.3)	(321.1–365.6)
(iv) Gravity	°API	D287	40–44	32–37
(v) Total sulfur	ppm	D2622	7–15	7–15
(vi) Hydrocarbon composition:.				
(A) Aromatics, minimum (Remainder shall be paraffins, naphthenes, and olefins).	pct.	D5186	8	27
(vii) Flashpoint, min	°F	D93	120	130
	(°C)		(48.9)	(54.4)
(viii) Viscosity	centistokes	D445	1.6–2.0	2.0–3.2

(3) Petroleum Diesel fuel for diesel engines meeting the specifications in table N07–3, or substantially equivalent specifications approved by the Administrator, shall be used in service accumulation. The grade of petroleum diesel fuel used shall be commercially designated as Type 2–D'' grade diesel fuel except that fuel commercially designated as ''Type 1–D'' grade Diesel fuel may be substituted provided that the manufacturer has submitted evidence to the Administrator demonstrating to the Administrator's satisfaction that this fuel will be the predominant in-use fuel. Such evidence could include such things as copies of signed contracts from customers indicating the intent to purchase and use ''Type 1–D'' grade diesel fuel as the primary fuel for use in the engines or other evidence acceptable to the Administrator. Table N07–03 follows:

TABLE N07–3

Item		ASTM test method No.	Type 1–D	Type 2–D
(i) Cetane Number		D613	40–56	38–58
(ii) Cetane Index		D976	min. 40	min. 40
(iii) Distillation range:				
90 pct. point	°F	D86	440–530	540–630
	(°C)		(226.7–276–7)	(293.3–332.2)
(iv) Gravity	°API	D287	39–45	30–39
(v) Total sulfur	ppm	D2622	7–15	7–15

TABLE N07–3—Continued

Item		ASTM test method No.	Type 1–D	Type 2–D
(vi) Flashpoint, min	°F	D93	130	130
	(°C)		(54.4)	(54.4)
(vii) Viscosity	centistokes	D445	1.2–2.2	1.5–4.5

(b)(4) through (g) [Reserved]. For guiDance see § 86.1313–94.

33. Section 86.1319–90 is amended by redesignating paragraph (e) as paragraph (f), and adding a new paragraph (e) to read as follows:

§ 86.1319–90 CVS calibration.

* * * * *

(e) *SSV calibration.* (1) The calibration of the SSV located in the tunnel shall be conducted in a similar manner as the CFV or PDP calibration. Gas flow within the SSV is a function of inlet pressure, P_1, the inlet temperature, T_1, and the pressure drop between the throat and the inlet, DP. Note that the following procedure is consistent with SAE J244. The calibration procedure described in paragraph (e)(3) of this section establishes the values of the coefficients at measured values of pressure, temperature and airflow.

(i) The flow rate for a subsonic venturi is calculated as a volumetric flow rate (Q_s) or a mass flow rate (Q_m) as follows: or

$$Q_s = \frac{Q_m}{\rho_s} = \frac{K_q}{\rho_s}\left(\frac{C_d * Y * d^2}{\sqrt{1-\beta^4}}\right)\sqrt{\rho_i * \Delta P}$$

$$Q_m = K_q * C_d * Y * d^2\left(\frac{\rho_i * \Delta P}{1-\beta^4}\right)^{1/2}$$

Where:

K_q = 0.0021074 (SI units).

Q_s = Air Volume Flow, SCFM (m^3/min).

Q_m = Air Mass Flow, lbm/min (kg/min).

ρ_s = Density at Standard Conditions, lbm/ft^3 (kg/m^3) as specified in paragraph (e)(1)(v) of this section.

ρ_s = Density at inlet conditions, lbm/ft^3 (kg/m^3), as specified in paragraph (e)(1)(iii) of this section.

C_d = Coefficient of Discharge = Actual Air Flow/Theoretical Air Flow.

Y = Expansion factor, as specified in paragraph (e)(1)(ii) of this section.

d = Throat diameter, inch (mm).

β = Ratio of venturi throat diameter to approach pipe diameter.

ΔP = Pressure drop between inlet and throat, in. H_2O (kPa).

(ii) The expansion factor (Y) is calculated as follows:

$$Y = \left[r^{\frac{2}{k}}\left(\frac{k}{k-1}\right)\left(\frac{1-r^{\left(\frac{k-1}{k}\right)}}{1-r}\right)\left(\frac{1-\beta^4}{1-\beta^4 * r^{\frac{2}{k}}}\right)\right]^{\frac{1}{2}}$$

Where:

$$r = 1 - \frac{\Delta P}{P_{abs}}$$

$$\beta = \frac{d}{D}$$

d = Throat diam., in (mm)

D = Inlet Pipe diam., in (mm)

k = Ratio of Specific Heat (1.40 for Air)

(iii) The inlet density (ρ1) is calculated as follows:

$$\rho_1 = \frac{P_{abs}}{R_{mix} * T_{abs}}$$

Where:

$P_{abs} = P_1 + P_B$

$T_{abs} = T_1 + 2731$

$R_{mix} = R_u / |MW_{mix}$

R_u = 8.3144 kJ/kg-mole-K

MW_{mix} = the molecular weight of the mix, as calculated in paragraph (e)(1)(iv) of this section.

(iv) The molecular weight of the mix, is calculated as follows:

$$MW_{mix} = \frac{MW_{AIR} * (P_{abs} - P_V) + MW_{H_2O} * P_v}{P_{abs}}$$

Where:

P_V = Vapor pressure, in Hg (kPa)

MW_{AIR} = 28.964 kg/kg-mole

MW_{H_20} = 18.015 kg/kg-mole

(v) The density at standard conditions of 101.33 kPa and 20 °C is calculated as follows:

$$\rho_s = \frac{101.33}{\frac{8.3144}{28.964} * 293.15} = 1.2041 \text{ kg/m}^3$$

(2) The venturi manufacturer's recommended procedure shall be followed for calibrating electronic portions of the SSV.

(3) Measurements necessary for flow calibration of the SSV are as follows:

CALIBRATION DATA MEASUREMENT

Parameter	Sym	Units	Tolerance
(i) Barometric pressure (corrected to 32° F)	P_B	in. Hg (kPa)	± .01in. Hg (± .034kPa)
(ii) Air temperature, into calibration venturi	ETI	° F (° C)	±.5 °F (.28° C)
(iii) Pressure drop between the inlet and throat of calibration venturi (corrected to 68° F).	EDP	in. H_2O (kPA)	± .05 in. H_2O (±.012kPa)
(iv) Air Flow	Q_S	Std ft³/min (m³/min).	± 5% of NIST "true" value
(v) SSV inlet depression	P_1	in. H_2O (kPa)	± .23 in. H_2O (±.057kPa)
(vi) Pressure drop between the inlet and throat of SSV	DP	in. H_2O (kPa)	±.05 in. H_2O (±.012kPa)
(vii) Water vapor pressure of inlet air	P_V	in. Hg (kPa)	±.10 in. Hg (± .34kPa)
(vii) Temperature at SSV inlet	T_1	°F (°C)	±4.0 °F (2.2° C)

(4) Set up equipment similar to CFV or PDP calibration except the variable flow restrictor valve can be deleted or set in the open position, and the pressure drop reading device must be added. The calibration test must be conducted with the test subsonic venturi in place in its permanent position. Any subsequent changes in upstream or downstream configuration could cause a shift in calibration. Leaks between the calibration metering device and the SSV must be eliminated.

(5) Adjust the variable flow blower or restrictor valve to its maximum in-use flow rate. Allow the system to stabilize and record data from all instruments. Be sure to avoid choke condition.

(6) Vary the flow through a minimum of eight steps covering the intended in-use operating range of the SSV.

(7) Data analyses. If the calibration venturi is used at the tunnel inlet (free standing), then assume a value of β=0. If the SSV installed in the CVS tunnel, use the actual inside tunnel diameter and the throat diameter to compute β.

(i) Assume an initial value for Cd = 0.98 to calculate Q_m for the calculation of Reynolds number, Re,:

$$Re = \frac{6.667E4 * Q_m}{\pi * d * \mu}$$

Where: μ = viscosity of air, centipoise

$$\mu = K_\mu * \frac{T_k^{1.5}}{(T_K + 110.4)}$$

Kμ=1.458E–3

T_K=(T_1°C+273.16)

(ii) From the initial calibration of the venturi, establish an equation of Cd as a function of Re. The following functional forms should be reviewed, but a power series, least-squares fit polynomial equation may result in the best fit. Many factors involved in the installation of SSV and the operating range of the Reynolds number can affect the functional relationship of the Cd with Re. Calculate Cd based on this initial equation of Re. Compute a final Q_m based on this calculated Cd for both the calibration nozzle and the inline SSV.

(8)(i) Compute the percent difference in air flow between the calibration venturi and the inline SSV. If the difference in percent of point is greater than 1%, compute a new Cd and Re for the in-tunnel venturi as follows:

Cd_{new}=Actual Air Flow/Theoretical Air Flow=Qm_{act} /Qm_{theo}

$$Re_{new} = \frac{0.8Qm_{cal}}{\pi * d * \mu}$$

(ii) Qm_{act} is flow measured by the calibration venturi and Qm_{theo} is the theoretical calculated flow based on the in-tunnel SSV conditions with Cd set equal to 1. Re_{new} is based on the calibrated venturi flow, but the in-tunnel SSV properties. Recalculate a new curve fit of Cd_{new} for the inline venturi as a function of Re_{new} following the guidelines in paragraph (e)(7) of this section. Agreement of the fit should be within 1.0% of point. Install the new Cd curve fit in the test cell flow computing device and conduct the propane injection, flow verification test.

* * * * *

34. A new section 86.1323–2007 is added to Subpart N to read as follows:

§ 86.1323–2007 Oxides of nitrogen analyzer calibration.

This section describes the initial and periodic calibration of the chemiluminescent oxides of nitrogen analyzer.

(a) Prior to introduction into service and at least monthly thereafter, the chemiluminescent oxides of nitrogen analyzer must be checked for NO2 to NO converter efficiency. The Administrator may approve less frequent checks of the converter efficiency. Figure N84–9 is a reference for paragraphs (a) (1) through (11) of this section.

(1) Follow good engineering practices for instrument start-up and operation. Adjust the analyzer to optimize performance.

(2) Zero the oxides of nitrogen analyzer with zero-grade nitrogen.

(3) Connect the outlet of the NO_X generator to the sample inlet of the oxides of nitrogen analyzer, which has been set to the most common operating range.

(4) Introduce into the NO_X generator-analyzer system an NO-in-nitrogen (N2) mixture with an NO concentration equal to approximately 80 percent of the most common operating range. The NO2 content of the gas mixture shall be less than 5 percent of the NO concentration.

(5) With the oxides of nitrogen analyzer in the NO mode, record the concentration of NO indicated by the analyzer.

(6) Turn on the NO_X generator O2 supply and adjust the O2 flow rate so that the NO indicated by the analyzer is about 10 percent less than indicated in paragraph (a)(5) of this section. Record the concentration of NO in this NO + O2 mixture.

(7) Switch the NO_X generator to the generation mode and adjust the generation rate so that the NO measured by the analyzer is 20 percent of that

measured in paragraph (a)(5) of this section. There must be at least 10 percent unreacted NO at this point. Record the concentration of residual NO.

(8) Switch the oxides of nitrogen analyzer to the NO_X mode and measure total NO_X. Record this value.

(9) Switch off the NO_X generator but maintain gas flow through the system. The oxides of nitrogen analyzer will indicate the NO_X in the NO + O2 mixture. Record this value.

(10) Turn off the NO_X generator O2 supply. The analyzer will now indicate the NO_X in the original NO-in-N2 mixture. This value should be no more than 5 percent above the value indicated in paragraph (a)(4) of this section.

(11) Calculate the efficiency of the NO_X converter by substituting the concentrations obtained into the following equation:

$$\text{Percent} - \text{efficiency} = \left(1 + \frac{a - b}{c - d}\right) \times 100$$

Where:
a = concentration obtained in paragraph (a)(8) of this section,
b = concentration obtained in paragraph (a)(9) of this section,
c = concentration obtained in paragraph (a)(6) of this section,
d = concentration obtained in paragraph (a)(7) of this section.

(12) If converter efficiency is not greater than 90 percent, repair the analyzer. The repaired analyzer must achieve a converter efficiency greater than 90 percent before the analyzer may be used.

(b) *Accuracy.* The accuracy at the minimum limit of the NO_X analyzer is defined in § 86.1338–2007. In general the analyzer's minimum limit shall be the lowest concentration within a given range, in which it has an accuracy of ±2 percent of point.

(c) *Initial and periodic calibration.* Prior to its introduction into service and monthly thereafter, the chemiluminescent oxides of nitrogen analyzer shall be calibrated on all normally used instrument ranges. Use the same flow rate as when analyzing samples. Proceed as follows:

(1) Adjust analyzer to optimize performance.

(2) Zero the oxides of nitrogen analyzer with zero-grade nitrogen (N2).

(3) (i) Calibrate all operating ranges with a minimum of 9 NO-in-N2 calibration gases (*e.g.*, 10, 20, 30, 40, 50, 60, 70, 80, and 90 percent of that range) and one zero-grade N2 gas. Sound engineering judgment shall dictate appropriate spacing and weighting of the calibration points.

(ii) For each range calibrated, if all deviations from a least-squares best-fit straight line are within ±2 percent of the value at each non-zero data point and within ±0.3 percent of full scale on the zero data point, then concentration values may be calculated using the linear calibration equation for that range. If the specified deviations are exceeded for ranges that have a minimum limit of 1 ppm or greater, then the best-fit non-linear equation that represents the data within these deviations may be used to determine concentration values. For ranges that have a minimum limit less than 1 ppm, only a linear or second order non-linear equation that represents the data within these deviations, may be used to determine concentration values.

(d) *Chemiluminescent NO_X analyzer interference check (i.e., quench check).* Prior to its introduction into service and at least once per year thereafter, the quench check described in this section shall be performed on CLD NO_X analyzers. CO2 and water vapor interfere with the response of a CLD by collisional quenching. The combined quench effect at their highest expected concentrations shall not exceed 2 percent.

(1) *CO_2 quench check procedure:* (i) For the procedure described in this paragraph, variations are acceptable provided that they produce equivalent $\%CO2_{quench}$ results. Connect a pressure-regulated CO_2 span gas to one of the inlets of a three-way valve. Its CO2 concentration should be approximately twice the maximum CO_2 concentration expected during testing. The valve must be leak-free, and its wetted parts must be made of a stainless steel or other inert material. Connect a pressure-regulated zero-grade N_2 gas to the other inlet of the three-way valve. Connect the single outlet of the valve to the balance-gas port of a properly operating gas divider. Connect a pressure-regulated NO span gas, which has approximately twice the typical NO concentration expected during testing, to the span-port of the gas divider. Configure the gas divider such that nearly equal amounts of the span gas and balance gas are blended with each other. Viscosity corrections shall be applied appropriately to ensure correct mass flow determinations.

(ii) With the CO_2 flowing to the balance port and the NO flowing to the span port, measure a stable CO_2 concentration from the gas divider's outlet with a properly calibrated NDIR analyzer. Record this concentration in percent (%); this is ''$\%CO_2$''. This value will be used in the water vapor quench check calculations that are detailed in the following section. After the $\%CO_2$ measurement, measure the NO concentration at the gas divider outlet with the CLD analyzer in the NO mode. Record this concentration in ppm; this is ''NO_{CO2}''. Then switch the three-way valve such that 100 percent N_2 flows to the balance port inlet. Monitor the CO_2 concentration of the gas divider's outlet until its concentration stabilizes at zero. Then measure the stable NO concentration from the gas divider's outlet. Record this value in ppm; this is ''NO_{N2}''. Calculate $\%CO_{2quench}$ as follows:

$$\%CO_{2quench} = (1.00 - (NO_{CO2}/NO_{N2})) \times 100$$

(2) Water vapor quench check procedure:

(i) For all dry CLD analyzers it must be demonstrated that for the highest expected water vapor concentration (*i.e.,* ''$\%H_2O_{exp}$'' as calculated later in this section), the water removal technique maintains CLD humidity at less than or equal to 5 $g_{water}/kg_{dry\ air}$ (or about 0.008 percent H_2O), which is 100% RH at 3.9 °C and 101.3 kPa. This humidity specification is also equivalent to about 25% RH at 25 °C and 101.3 kPa. This may be demonstrated by measuring the temperature at the outlet of a thermal dehumidifier, or by measuring humidity at a point just upstream of the CLD. Humidity of the CLD exhaust might also be measured as long as the only flow into the CLD is the flow out of the dehumidifier.

(ii) For all ''wet'' CLD analyzers the following water vapor quench check procedure shall be followed. Measure an NO span gas, which has 90% to 100% of the typical NO expected during testing, using the CLD in the NO mode. Record this concentration in ppm; this is ''NO_{dry}''. Then bubble the same NO span gas through distilled water in a sealed vessel at 25 °C ±10 °C. This temperature specification imposed to ensure that the H_2O_{vol} calculation (refer to (iii) of this section) returns an accurate result. To prevent subsequent condensation, this temperature must also be less than any temperature that the wetted sample will experience between the sealed vessel's outlet and the CLD. Record the vessel's water temperature in °C; this is ''T_{sat}''. Record the vessel's absolute pressure in kPa; this is ''P_{sat}''. Measure the wetted span gas with the CLD, and record this value in ppm; this is ''NO_{wet}''.

(iii) Calculations for water quench must consider dilution of the NO span gas with water vapor and scaling of the water vapor concentration to that expected during testing.

(A) Calculate the volume fraction of water vapor in the wetted span gas, as $H_2O_{vol} = (\exp(3.69 - (81.28/T_{sat})) + 1.61)/P_{sat}$. This calculation approximates some of the thermodynamic properties of water based on the ''1995 Formulation for the Thermodynamic Properties of Ordinary Water Substance for General and Scientific Use'', issued by The International Association for the Properties of Water and Steam (IAPWS). However, this approximation should only be used as prescribed in this section because it is an exponential fit that is accurate for data at 25 °C ±10 °C. Then, assuming a diesel fuel atomic hydrogen to carbon ratio of 1.8, and an intake and dilution air humidity of 75 grains (10.71 $g_{water}/kg_{dry\ air}$ or 54.13 percent RH at 25 °C and 101.3 kPa),

(B) Calculate the maximum percent water vapor expected during testing; as $\%H_2O_{exp} = (0.90 \times \%CO_2) + 1.69$. $\%CO_2$ is the value measured during the $\%CO_2$ quench check.

(C) Calculate the expected wet concentration of NO in ppm; as $NO_{exp} = NO_{dry} \times (1.00 - H_2O_{vol})$

(iv) Calculate the percent water vapor quench as:

$$\%H_2O_{quench} = ((NO_{exp} - NO_{wet})/NO_{exp}) \times (\%H_2O_{exp}/H_2O_{vol})$$

(3) Add the $\%CO_{2quench}$ and the $\%H_2O_{quench}$ values. Their sum may not exceed the limit set in paragraph (d). If their sum is greater than this limit, then the CLD instrument may not be used to perform testing unless it is repaired. The analyzer must be shown to pass this quench check after the repair before it may be used for testing.

35. Section 86.1330–90 is amended by revising paragraph (a) to read as follows:

§ 86.1330–90 Test sequence; general requirements.

(a) The test sequence shown in Figure N90–10 shows the major steps of the test procedure, as follows:

BILLING CODE 6560–50–P

Figure N90-10 Test Sequence

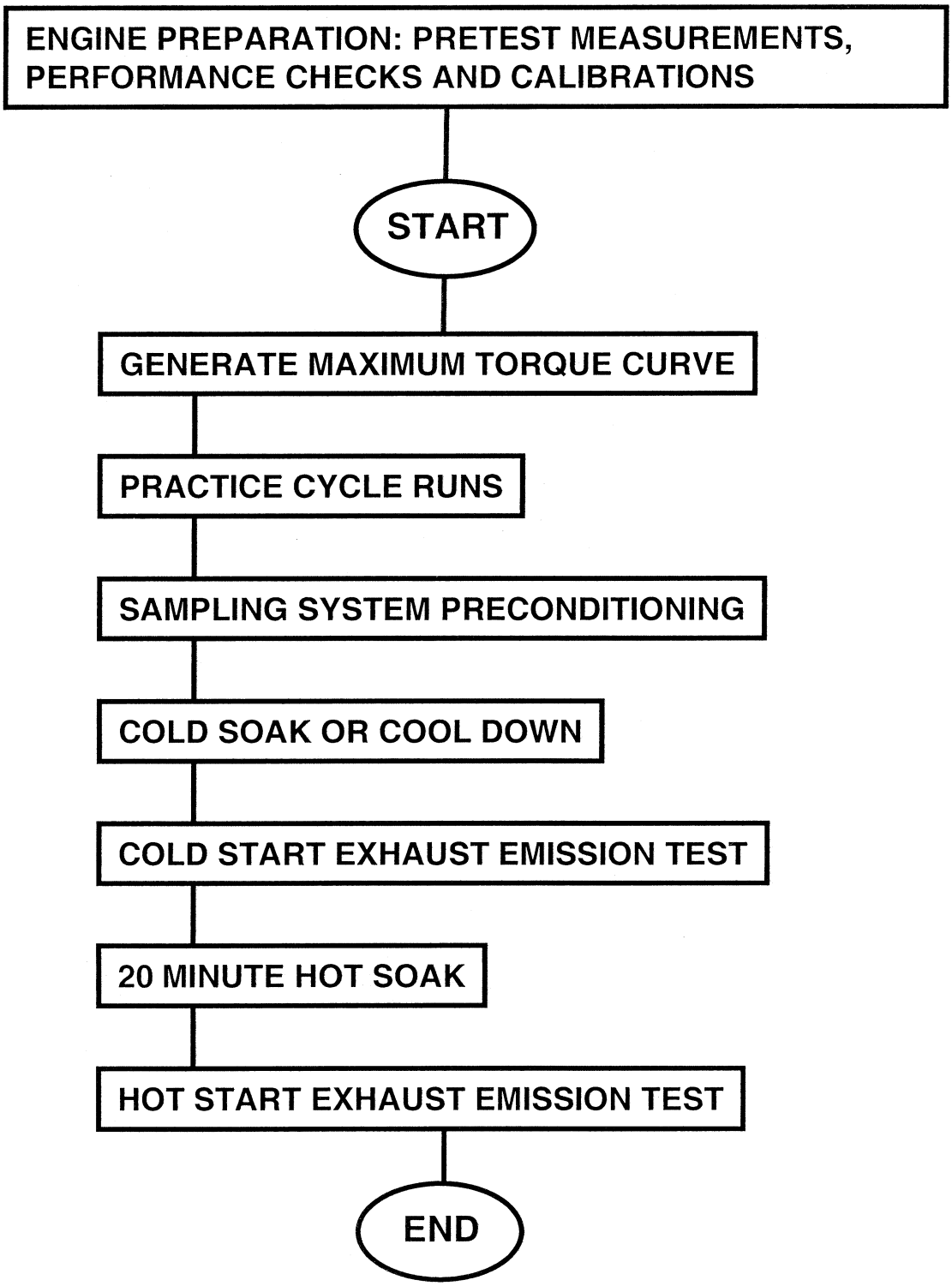

BILLING CODE 6560–50–C

* * * * *

36. Section 86.1334–84 is amended by revising paragraph (a)(1) and (a)(2) to read as follows:

§ 86.1334–84 Pre-test engine and dynamometer preparation.

(a) * * * (1) Before the cold soak or cool down:

(i) Final calibration of the dynamometer and throttle control systems may be performed. These calibrations may consist of steady-state operations and/or actual practice cycle runs, and must be completed before sampling system preconditioning (if applicable).

(ii) Conduct sampling system preconditioning for diesel engines (optional for model years prior to 2007) by operating the engine at a condition of rated-speed, 100 percent torque for a minimum of 20 minutes while simultaneously operating the CVS and secondary dilution system and taking particulate matter emissions samples from the secondary dilution tunnel . Particulate sample filters need not be stabilized or weighed, and may be discarded. Filter media may be changed during conditioning as long as the total sampled time through the filters and sampling system exceeds 20 minutes. Flow rates shall be set at the approximate flow rates selected for transient testing. Torque shall be reduced from 100 percent torque while maintaining the rated speed condition as necessary to prevent exceeding the maximum sample zone temperature specifications of § 86.1310–2007.

(2) Following sampling system preconditioning cycle, the engine shall be cooled per § 86.1335–90.

* * * * *

37. A new section 86.1337–2007 is added to subpart N to read as follows:

§ 86.1337–2007 Engine dynamometer test run.

(a) The following steps shall be taken for each test:

(1) Prepare for the cold-start test.

(i) For gasoline- and methanol-fueled engines only, evaporative emission canisters shall be prepared for use in this testing in accordance with the procedures specified in § 86.1232–96 (h) or (j). The size of the canisters used for testing shall correspond with the largest canister capacity expected in the range of vehicle applications for each engine. (The Administrator may, at his/her discretion, use a smaller canister capacity.) Attach the evaporative emission canister(s) to the engine, using the canister purge plumbing and controls employed in vehicle applications of the engine being tested. Plug the canister port that is normally connected to the fuel tank.

(ii) Prepare the engine, dynamometer, and sampling system.

(iii) Change filters, etc., and leak check as necessary.

(2) Connect evacuated sample collection bags to the dilute exhaust and dilution air sample collection systems if bag sampling is used.

(3) For methanol-fueled vehicles, install fresh methanol and formaldehyde impingers (or cartridges) in the exhaust and dilution air sample systems for methanol and formaldehyde. A single dilution air sample covering the total test period may be utilized for methanol and formaldehyde background. (Background measurements of methanol and formaldehyde may be omitted and concentrations assumed to be zero for calculations in § 86.1344.)

(4) Attach the CVS to the engine exhaust system any time prior to starting the CVS.

(5) Start the CVS (if not already on), the sample pumps (except for the particulate sample pump(s), if applicable), the engine cooling fan(s), and the data collection system. The heat exchanger of the constant volume sampler (if used), and the heated components of any continuous sampling system(s) (if applicable) shall be preheated to their designated operating temperatures before the test begins. (See § 86.1340(e) for continuous sampling procedures.)

(6) Adjust the sample flow rates to the desired flow rates and set the CVS gas flow measuring devices to zero. CFV–CVS sample flow rate is fixed by the venturi design.

(7) For engines tested for particulate emissions, carefully install a clean, loaded particulate sample filter cartridge into the filter holder assembly. It is recommended that this be done within the filter stabilization environment, with both ends of the filter holder assembly plugged during transport to the emissions test facility. Install the assembled filter holder into the sample flow line.

(8) Follow the manufacturer's instructions for cold starting. Simultaneously start the engine and begin exhaust and dilution air sampling. For petroleum-fueled diesel engines (and natural gas-fueled, liquified petroleum gas-fueled or methanol-fueled diesels, if used) Turn on the hydrocarbon and NO_X (and CO and CO_2, if continuous) analyzer system integrators (if used), and turn on the particulate sample pumps and indicate the start of the test on the data collection medium.

(9) Allow the engine to idle freely with no-load for 24±1 seconds. This idle period for automatic transmission engines may be interpreted as an idle speed in neutral or park. All other idle conditions shall be interpreted as an idle speed in gear. It is permissible to lug the engine down to curb idle speed during the last 8 seconds of the free idle period for the purpose of engaging dynamometer control loops.

(10) Begin the transient engine cycles such that the first non-idle record of the cycle occurs at 25±1 seconds. The free idle time is included in the 25±1 seconds.

(i) During particulate sampling it must be demonstrated that the ratio of main tunnel flow to particulate sample flow does not change by more than ±5.0 percent of its set point value (except for the first 10 seconds of sampling). For double dilution operation, sample flow is the net difference between the flow rate through the sample filters and the secondary dilution air flow rate.

(ii) Record flow. If the set flow rate cannot be maintained because of high particulate loading on the filter, the test shall be terminated. The test shall be rerun using a lower sample flow rate or greater dilution.

(11) Begin the transient engine cycles such that the first non-idle record of the cycle occurs at 25±1 seconds. The free idle time is included in the 25±1 seconds.

(12) On the last record of the cycle, cease sampling. Immediately turn the engine off and start a hot-soak timer. Also turn off the particulate sample pumps, the gas flow measuring device(s) and any continuous analyzer system integrator and indicate the end of the test on the data collection medium. Sampling systems should continue to sample after the end of the test cycle until system response times have elapsed.

(13) Immediately after the engine is turned off, turn off the engine cooling fan(s) if used. As soon as possible, transfer the ''cold start cycle'' exhaust and dilution air bag samples to the analytical system and process the samples according to § 86.1340. A stabilized reading of the exhaust sample on all analyzers shall be obtained within 20 minutes of the end of the sample collection phase of the test. Analysis of the methanol and formaldehyde samples shall be obtained within 24 hours of the end of the sample collection period. For particulate measurements, carefully remove the filter holder from the sample flow apparatus

(14) Allow the engine to soak for 20±1 minutes.

(15) Prepare the engine and dynamometer for the hot start test.

(16) Connect evacuated sample collection bags to the dilute exhaust and dilution air sample collection systems.

(17) Install fresh methanol and formaldehyde impingers (or capsules) in the exhaust and dilution air sample systems for methanol and formaldehyde.

(18) Start the sample pumps (except the particulate sample pump(s), if applicable), the engine cooling fan(s) and the data collection system. The heat exchanger of the constant volume sampler (if used) and the heated components of any continuous sampling system(s) (if applicable) shall be preheated to their designated operating temperatures before the test begins. See § 86.1340(e) for continuous sampling procedures.

(19) Adjust the sample flow rates to the desired flow rate and set the CVS gas flow measuring devices to zero.

(20) For diesel engines tested for particulate, carefully install a clean, loaded particulate sample filter cartridge in the filter holder assembly and install the filter holder assembly in the sample flow line.

(21) Follow the manufacturer's choke and throttle instruction for hot starting. Simultaneously start the engine and begin exhaust and dilution air sampling. For diesel engines, turn on the hydrocarbon and NO_X (and CO and CO2, if continuous) analyzer system integrator (if used), indicate the start of the test on the data collection medium, and turn on the particulate sample pump(s).

(22) [Reserved]

(23) Allow the engine to idle freely with no-load for 24±1 seconds. The provisions and interpretations of paragraph (a)(9) of this section apply.

(24) Begin the transient-engine cycle such that the first non-idle record of the cycle occurs at 25±1 seconds. The free idle is included in the 25±1 seconds.

(25) On the last record of the cycle, allow sampling system response times to elapse and cease sampling. Turn off the particulate sample pump(s) (if appropriate), the gas flow measuring device(s) and any continuous analyzer system integrator and indicate the end of the test on the data collection medium.

(26) As soon as possible, transfer the ''hot start cycle'' exhaust and dilution air bag samples to the analytical system and process the samples according to § 86.1340. A stabilized reading of the exhaust sample on all analyzers shall be obtained within 20 minutes of the end of the sample collection phase of the test. Analyze the methanol and formaldehyde samples within 24 hours. (If it is not possible to perform analysis within 24 hours, the samples should be stored in a cold (approximately 0 deg.C) dark environment until analysis can be performed). For particulate measurements, carefully remove the filter holder assembly. It is recommended that the filter cartridge be transferred to and from the filter stabilization environment within the filter holder assembly with both ends plugged, and that the cartridge be removed from the filter holder assembly within the stabilization environment. Transfer the particulate filter to the stabilization environment for post-test stabilization. Filters may be stabilized in the petri dishes while still within the filter cartridges, or the cartridge tops may be removed for stabilization, or the filters may be entirely removed from the filter cartridges and stabilized in the petri dishes alone. Removal of the filters from the filter cartridges shall only take place within the stabilization environment.

(27) The CVS and the engine may be turned off, if desired.

(b) The procedure in paragraph (a) of this section is designed for one sample bag for the cold start portion and one for the hot start portion.

(c) If a dynamometer test run is determined to be void, corrective action may be taken. The engine may then be allowed to cool (naturally or forced) and the dynamometer test rerun.

38. A new section 86.1338–2007 is added to Subpart N to read as follows:

§ 86.1338–2007 Emission measurement accuracy.

(a) *Minimum limit.* (1) The minimum limit of an analyzer must be equal to or less than one-half of the average diluted concentration for an engine emitting the maximum amount of the applicable pollutant allowed by the applicable standard. For example, if with a given dilution and sampling system, an engine emitting NO_X at the level of the standard (*e.g.,* 0.20 g/bhp-hr NO_X) would result in an average NO_X concentration of 1.0 ppm in the diluted sample, then the minimum limit for the NO_X analyzer must be less than or equal to 0.5 ppm.

(2) For the purpose of this section, ''minimum limit'' means the lowest of the following levels:

(i) The lowest NO_X concentration in the calibration curve for which an accuracy of ±2 percent of point has been demonstrated as specified in paragraph (a)(3) of this section; or

(ii) Any NO_X concentration for which the test facility has demonstrated sufficient accuracy to the Administrator's satisfaction prior to the start of testing, such that it will allow a meaningful determination of compliance with respect to the applicable standard.

(3) For determination of the analyzer's minimum limit, a NO_X concentration that is less than or equal to one-half of the average NO_X concentration determined in paragraph (a)(1) of this section shall be measured by the oxides of nitrogen analyzer following the analyzer's monthly periodic calibration. This measurement must be made to ensure the accuracy of the calibration curve to within ±2 percent of point accuracy of the appropriate least-squares fit, at less than or equal to one half of the average expected diluted NO_X concentration determined in paragraph (a)(1) of this section.

(b) *Measurement accuracy—Bag sampling.* Analyzers used for bag analysis must be operated such that the measured concentration falls between 15 and 100 percent of full scale, with the following exception: concentrations below 15 percent of full scale may be used if the minimum limit of the analyzer within the range meets the requirement of paragraph (a) of this section.

(c) *Measurement accuracy—Continuous measurement.* (1) Analyzers used for continuous analysis must be operated such that the measured concentration falls between 15 and 100 percent of full scale, with the following exceptions:

(i) Concentrations below 15 percent of full scale may be used if the minimum limit of the analyzer within the range meets the requirement of paragraph (a) of this section.

(ii) Analyzer response over 100% of full scale may be used if it can be shown that readings in this range are accurate.

(2) If the analyzer response exceeds the level allowed by paragraph (c)(1)(ii) of this section, the test must be repeated using a higher range and both results must be reported. The Administrator may waive this requirement.

(d) If a gas divider is used, the gas divider shall conform to the accuracy requirements specified in § 86.1314–84(g), and shall be used according to the procedures contained in paragraphs (a) and (b) of this section.

39. Section 86.1339–90 is amended by adding paragraph (h) to read as follows:

§ 86.1339–90 Particulate filter handling and weighing.

* * * * *

(h) This section does not apply for tests conducted according to the provisions of § 86.1312–2007.

40. Section 86.1360–2007 is amended by revising the section heading, adding introductory text, and revising paragraphs (b), (e)(2), (e)(3), and (e)(6)(ii), to read as follows:

§ 86.1360–2007 Supplemental emission test; test cycle and procedures.

The test procedures of this subpart N apply for supplemental emission testing, except as specified otherwise in this section.

* * * * *

(b) *Test cycle.* (1)(i) The following 13-mode cycle must be followed in dynamometer operation on the test engine:

Mode number	Engine speed	Percent load	Weighting factor	Mode length (minutes)
1	Idle		0.15	4
2	A	100	0.08	2
3	B	50	0.10	2
4	B	75	0.10	2
5	A	50	0.05	2
6	A	75	0.05	2
7	A	25	0.05	2
8	B	100	0.09	2
9	B	25	0.10	2
10	C	100	0.08	2
11	C	25	0.05	2
12	C	75	0.05	2
13	C	50	0.05	2

(ii) Upon Administrator approval, the manufacturer may use mode lengths other than those listed in paragraph (b)(1)(i) of this section.

(2) In addition to the 13 test points identified in paragraph (b)(1) of this section, for engines not certified to a NO_X standard or FEL less than1.5 g/bhp-hr, EPA may select, and require the manufacturer to conduct the test using, up to 3 additional test points within the control area (as defined in paragraph (d) of this section). EPA will notify the manufacturer of these supplemental test points in writing in a timely manner before the test. Emissions sampling for the additional test modes must include all regulated gaseous pollutants. Particulate matter does not need to be measured.

* * * * *

(e) * * *

(2) *Test sequence.* The test must be performed in the order of the mode numbers in paragraph (b)(1) of this section. Where applicable, the EPA-selected test points identified under paragraph (b)(2) of this section must be performed immediately upon completion of mode 13. The engine must be operated for the prescribed time in each mode, completing engine speed and load changes in the first 20 seconds of each mode. The specified speed must be held to within ±50 rpm and the specified torque must be held to within plus or minus two percent of the maximum torque at the test speed.

(3) *Particulate sampling.* One filter shall be used for sampling PM over the 13-mode test procedure. The modal weighting factors specified in paragraph (b)(1) of this section shall be taken into account by taking a sample proportional to the exhaust mass flow during each individual mode of the cycle. This can be achieved by adjusting sample flow rate, sampling time, and/or dilution ratio, accordingly, so that the criterion for the effective weighting factors is met. The sampling time per mode must be at least 4 seconds per 0.01 weighting factor. Sampling must be conducted as late as possible within each mode. Particulate sampling shall be completed no earlier than 5 seconds before the end of each mode.

* * * * *

(6) * * *

(ii) For PM measurements, a single filter must be used to measure PM over the 13 modes. The brake-specific PM emission level for the test must be calculated as described for a transient hot start test in § 86.1343. Only the power measured during the sampling period shall be used in the calculation.

* * * * *

41. Section 86.1370–2007 is amended by revising paragraphs (a), (b)(6) and (d), removing and reserving paragraph (b)(5), and adding paragraphs (b)(7) and (g) to read as follows:

§ 86.1370–2007 Not-To-Exceed test procedures.

(a) *General.* The purpose of this test procedure is to measure in-use emissions of heavy-duty diesel engines while operating within a broad range of speed and load points (the Not-To-Exceed Control Area) and under conditions which can reasonably be expected to be encountered in normal vehicle operation and use. Emission results from this test procedure are to be compared to the Not-To-Exceed Limits specified in § 86.007–11 (a)(4), or to later Not-To-Exceed limits. The Not-To-Exceed Limits do not apply for engine starting conditions.

(b) * * *

(5) [Reserved]

(6)(i) For petroleum-fueled diesel cycle engines, the manufacturer may identify particular engine-vehicle combinations and may petition the Administrator at certification to exclude operating points from the Not-to-Exceed Control Area defined in § 86.1370(b)(1) through (5) if the manufacturer can demonstrate that the engine is not capable of operating at such points when used in the specified engine-vehicle combination(s).

(ii) For diesel cycle engines that are not petroleum-fueled, the manufacturer may petition the Administrator at certification to exclude operating points from the Not-to-Exceed Control Area defined in § 86.1370(b)(1) through (5) if the manufacturer can demonstrate that the engine is not expected to operate at such points in normal vehicle operation and use.

(7) Manufacturers may petition the Administrator to limit NTE testing in a single defined region of speeds and loads. Such a defined region must generally be of elliptical or rectangular shape, and must share some portion of its boundary with the outside limits of the NTE zone. Under this provision testing would not be allowed with sampling periods in which operation within that region constitutes more than 5.0 percent of the time-weighted operation within the sampling period. Approval of this limit by the Administrator is contingent on the manufacturer satisfactorily demonstrating that operation at the

speeds and loads within that region accounts for less than 5.0 percent of all in-use operation (weighted by vehicle-miles-traveled or other EPA-approved weightings) for the in-use engines of that configuration (or sufficiently similar engines). At a minimum, this demonstration must include operational data from representative in-use vehicles.

* * * * *

(d) *Not-to-exceed control area limits.* (1) When operated within the Not-To-Exceed Control Area defined in paragraph (b) of this section, diesel engine emissions shall not exceed the applicable Not-To-Exceed Limits specified in § 86.007–11(a)(4) when averaged over any period of time greater than or equal to 30 seconds, except where a longer averaging period is required by paragraph (d)(2) of this section.

(2) For engines equipped with emission controls that include discrete regeneration events, if a regeneration event occurs during the NTE test, then the averaging period must be at least as long as the time between the events multiplied by the number of full regeneration events within the sampling period. The requirement in this paragraph (d)(2) only applies for engines that send an electronic signal indicating the start of the regeneration event.

* * * * *

(g) *NO_X and NMHC aftertreatment warm-up.* For engines equipped with one or more aftertreatment devices that reduce NO_X or NMHC emissions, the NTE NO_X and NMHC emission limits do not apply when the exhaust gas temperature is measured within 12 inches of the outlet of the aftertreatment device and is less the 250°C. For multi-bed systems, it is the temperature at the outlet of the device with the maximum flow rate that determines whether the NTE limits apply.

42. § 86.1803–01 is amended by adding a definition of ''U.S. heavy-duty vehicle sales'' in alphabetical order to read as follows:

§ 86.1803–01 Definitions.

* * * * *

U.S. heavy-duty vehicle sales means sales of heavy-duty vehicles subject to the standards of this subpart, where the sale takes place in any state of the United States except for California (or a state that has adopted California motor vehicle standards for that model year pursuant to section 177 of the Clean Air Act).

* * * * *

43. § 86.1806–05 is amended by revising paragraphs (b) introductory text, (b)(1), and (l) to read as follows:

§ 86.1806–05 On-board diagnostics.

* * * * *

(b) *Malfunction descriptions.* The OBD system must detect and identify malfunctions in all monitored emission-related powertrain systems or components according to the following malfunction definitions as measured and calculated in accordance with test procedures set forth in subpart B of this part (chassis-based test procedures), excluding those test procedures defined as ''Supplemental'' test procedures in § 86.004–2 and codified in §§ 86.158, 86.159, and 86.160.

(1) *Catalysts and particulate traps.* (i) *Otto-cycle.* Catalyst deterioration or malfunction before it results in an increase in NMHC emissions 1.5 times the NMHC standard or FEL, as compared to the NMHC emission level measured using a representative 4000 mile catalyst system.

(ii) *Diesel.* (A) If equipped, catalyst deterioration or malfunction before it results in exhaust emissions exceeding 1.5 times the applicable standard or FEL for NO_X or PM. This requirement applies only to reduction catalysts; monitoring of oxidation catalysts is not required. This monitoring need not be done if the manufacturer can demonstrate that deterioration or malfunction of the system will not result in exceedance of the threshold.

(B) If equipped with a particulate trap, catastrophic failure of the device must be detected. Any particulate trap whose complete failure results in exhaust emissions exceeding 1.5 times the applicable standard or FEL for NO_X or PM must be monitored for such catastrophic failure. This monitoring need not be done if the manufacturer can demonstrate that a catastrophic failure of the system will not result in exceedance of the threshold.

* * * * *

(l) *Phase-in for complete heavy-duty vehicles.* Complete heavy-duty vehicles weighing 14,000 pounds GVWR or less that are not Otto-cycle MDPVs must meet the OBD requirements of this section according to the following phase-in schedule, based on the percentage of projected vehicle sales. The 2004 model year requirements in the following phase-in schedule are applicable only to heavy-duty Otto-cycle vehicles where the manufacturer has selected Otto-cycle Option 1 or 2 for alternative 2003 or 2004 compliance according to § 86.004–01(c)(1) or (2). The 2005 through 2007 requirements in the following phase-in schedule apply to all heavy-duty vehicles weighing 14,000 pounds GVWR or less, excluding MDPVs. If the manufacturer has selected Otto-cycle Option 3 it may exempt 2005 model year complete heavy-duty engines and vehicles whose model year commences before July 31, 2004 from the requirements of this section. For the purposes of calculating compliance with the phase-in provisions of this paragraph (l), heavy-duty vehicles subject to the phase-in requirements of this section may be combined with heavy-duty vehicles subject to the phase-in requirements of paragraph § 86.005–17 (k). The phase-in schedule follows:

OBD COMPLIANCE PHASE-IN FOR COMPLETE HEAVY-DUTY VEHICLES WEIGHING 14,000 POUNDS GVWR OR LESS

Model year	Phase-in based on projected sales
2004 MY	Applicable only to Otto-cycle engines complying with Options 1 or 2; 40% compliance; alternative fuel waivers available.
2005 MY	60% compliance; alternative fuel waivers available.
2006 MY	80% compliance; alternative fuel waivers available.
2007 MY	80% compliance; alternative fuel waivers available.
2008+ MY	100% compliance.

44. A new § 86.1807–07 is added to subpart S to read as follows:

§ 86.1807–07 Vehicle labeling.

Section 86.1807–07 includes text that specifies requirements that differ from those specified in § 86.1807–01. Where a paragraph in § 86.1807–01 is identical and applicable to § 86.1807–07, this may be indicated by specifying the corresponding paragraph and the statement ''[Reserved]. For guidance see § 86.1807–01.''.

(a) through (g) [Reserved]. For guidance see § 86.1807–01.

(h) Model year 2007 and later diesel-fueled Tier 2 vehicles (certified using a test fuel with 15 ppm sulfur or less), must include permanent readily visible labels on the dashboard (or instrument panel) and near all fuel inlets that state ''Use Low-sulfur Diesel Fuel Only'' or ''Low-sulfur Diesel Fuel Only''.

45. A new § 86.1808–07 is added to subpart S to read as follows:

§ 86.1808–07 Maintenance instructions.

Section 86.1808–07 includes text that specifies requirements that differ from those specified in § 86.1808–01. Where a paragraph in § 86.1808–01 is identical and applicable to § 86.1808–07, this may be indicated by specifying the corresponding paragraph and the statement ''[Reserved]. For guidance see § 86.1808–01.''.

(a) through (f) [Reserved]. For guidance see § 86.1808–01.

(g) For each new diesel-fueled Tier 2 vehicle (certified using a test fuel with 15 ppm sulfur or less), the manufacturer shall furnish or cause to be furnished to the purchaser a statement that ''This vehicle must be operated only with low sulfur diesel fuel (that is., diesel fuel meeting EPA specifications for highway diesel fuel, including a 15 ppm sulfur cap).''.

46. Section 86.1810–01 is amended by revising the introductory text to read as follows:

§ 86.1810–01 General standards; increase in emissions; unsafe conditions; waivers.

This section applies to model year 2001 and later light-duty vehicles and light-duty trucks fueled by gasoline, diesel, methanol, natural gas and liquefied petroleum gas fuels. This section also applies to MDPVs and complete heavy-duty vehicles certified according to the provisions of this subpart. Multi-fueled vehicles (including dual-fueled and flexible-fueled vehicles) shall comply with all requirements established for each consumed fuel (or blend of fuels in the case of flexible fueled vehicles). The standards of this subpart apply to both certification and in-use vehicles unless otherwise indicated. For Tier 2 and interim non-Tier 2 vehicles, this section also applies to hybrid electric vehicles and zero emission vehicles. Unless otherwise specified, requirements and provisions of this subpart applicable to methanol fueled vehicles are also applicable to Tier 2 and interim non-Tier 2 ethanol fueled vehicles.

* * * * *

47. Section 86.1816–05 is amended by revising paragraph (g) to read as follows:

§ 86.1816–05 Emission standards for complete heavy-duty vehicles.

* * * * *

(g) *Idle exhaust emission standards, complete heavy-duty vehicles.* Exhaust emissions of carbon monoxide from 2005 and later model year gasoline, methanol, natural gas-and liquefied petroleum gas-fueled complete heavy-duty vehicles shall not exceed 0.50 percent of exhaust gas flow at curb idle for a useful life of 11 years or 120,000 miles, whichever occurs first. This does not apply for vehicles certified to the requirements of § 86.1806–05

* * * * *

48. A new § 86.1816–08 is added to subpart S, to read as follows:

§ 86.1816–08 Emission standards for complete heavy-duty vehicles.

Section 86.1816–08 includes text that specifies requirements that differ from those specified in § 86.1816–05. Where a paragraph in § 86.1816–05 is identical and applicable to § 86.1816–08, this may be indicated by specifying the corresponding paragraph and the statement ''[Reserved]. For guidance see § 86.1816–05.''. This section applies to 2008 and later model year complete heavy-duty vehicles (excluding MDPVs) fueled by gasoline, methanol, natural gas and liquefied petroleum gas fuels except as noted. Multi-fueled vehicles shall comply with all requirements established for each consumed fuel. For methanol fueled vehicles, references in this section to hydrocarbons or total hydrocarbons shall mean total hydrocarbon equivalents and references to non-methane hydrocarbons shall mean non-methane hydrocarbon equivalents.

(a) *Exhaust emission standards.* (1) Exhaust emissions from 2008 and later model year complete heavy-duty vehicles at and above 8,500 pounds Gross Vehicle Weight Rating but equal to or less than 10,000 Gross Vehicle Weight Rating pounds shall not exceed the following standards at full useful life:

(i) [Reserved]

(ii) *Non-methane hydrocarbons.* (A) 0.195 grams per mile; this requirement may be satisfied by measurement of non-methane organic gas or total hydrocarbons, at the manufacturer's option. For alcohol-fueled vehicles, this standard is 0.195 grams per mile NMHCE.

(B) A manufacturer may elect to include any or all of its test groups in the NMHC emissions ABT programs for heavy-duty vehicles, within the restrictions described in § 86.1817–05. or § 86.1817–08. If the manufacturer elects to include test groups in any of these programs, the NMHC FEL may not exceed 0.28 grams per mile. This ceiling value applies whether credits for the family are derived from averaging, banking, or trading.

(iii) *Carbon monoxide.* 7.3 grams per mile.

(iv) *Oxides of nitrogen.* (A)0.2 grams per mile.

(B) A manufacturer may elect to include any or all of its test groups in the NO_X emissions ABT programs for heavy-duty vehicles, within the restrictions described in § 86.1817–05 or § 86.1817–08. If the manufacturer elects to include test groups in any of these programs, the NO_X FEL may not exceed 0.9 grams per mile. This ceiling value applies whether credits for the family are derived from averaging, banking, or trading.

(v) *Particulate.* 0.02 grams per mile.

(vi) *Formaldehyde.* 0.032 grams per mile.

(2) Exhaust emissions from 2008 and later model year complete heavy-duty vehicles above 10,000 pounds Gross Vehicle Weight Rating but less than 14,000 pounds Gross Vehicle Weight Rating shall not exceed the following standards at full useful life:

(i) [Reserved]

(ii) *Non-methane hydrocarbons.* (A) 0.230 grams per mile; this requirement may be satisfied by measurement of non-methane organic gas or total hydrocarbons, at the manufacturer's option. For alcohol-fueled vehicles, this standard is 0.230 grams per mile NMHCE.

(B) A manufacturer may elect to include any or all of its test groups in the NMHC emissions ABT programs for heavy-duty vehicles, within the restrictions described in § 86.1817–05. or § 86.1817–08. If the manufacturer elects to include test groups in any of these programs, the NMHC FEL may not exceed 0.33 grams per mile. This ceiling value applies whether credits for the family are derived from averaging, banking, or trading.

(iii) *Carbon monoxide.* 8.1 grams per mile.

(iv) *Oxides of nitrogen.* (A)0.4 grams per mile.

(B) A manufacturer may elect to include any or all of its test groups in the NO_X emissions ABT programs for heavy-duty vehicles, within the restrictions described in § 86.1817–05. or § 86.1817–08. If the manufacturer elects to include test groups in any of these programs, the NO_X FEL may not exceed 1.0 grams per mile. This ceiling value applies whether credits for the family are derived from averaging, banking, or trading.

(v) *Particulate.* 0.02 grams per mile.

(vi) *Formaldehyde.* 0.040 grams per mile.

(b) [Reserved]

(c) [Reserved]

(d) *Evaporative emissions.* Evaporative hydrocarbon emissions from gasoline-fueled, natural gas-fueled, liquefied petroleum gas-fueled, and methanol-fueled complete heavy-duty vehicles shall not exceed the following standards. The standards apply equally to certification and in-use vehicles. The spitback standard also applies to newly assembled vehicles.

(1) For the full three-diurnal test sequence, diurnal plus hot soak measurements: 1.4 grams per test.

(2) Gasoline and methanol fuel only. For the supplemental two-diurnal test sequence, diurnal plus hot soak measurements: 1.75 grams per test.

(3) Gasoline and methanol fuel only. Running loss test: 0.05 grams per mile.

(4) Gasoline and methanol fuel only. Fuel dispensing spitback test: 1.0 grams per test.

(e) through (h) [Reserved]. For guidance see § 86.1816–05.

(i) *Phase-in options.* (1)(i) For model year 2008, manufacturers may certify some of their test groups to the standards applicable to model year 2008 vehicles under § 86.1816–05, in lieu of the exhaust standards specified in this section. These vehicles must comply with all other requirements applicable to model year 2007 vehicles. The combined number of vehicles in the test groups certified to the 2008 standards may not exceed 50 percent of the manufacturer's U.S. heavy-duty vehicle sales of complete heavy-duty Otto-cycle motor vehicles for model year 2008, except as explicitly allowed by paragraph (i)(2) of this section.

(ii) For model year 2008, manufacturers may certify some of their test groups to the evaporative standards applicable to model year 2007 engines under § 86.1816–05, in lieu of the evaporative standards specified in this section. These vehicles must comply with all other requirements applicable to model year 2008 vehicles, except as allowed by paragraph (i)(1)(i) of this section. The combined number of vehicles in the test groups certified to the 2007 standards may not exceed 50 percent of the manufacturer's U.S. heavy-duty vehicle sales of complete heavy-duty Otto-cycle motor vehicles for model year 2008.

(2)(i) Manufacturers certifying vehicles to all of the applicable standards listed in paragraph (a) of this section prior to model year 2008 (without using credits) may reduce the number of vehicles that are required to meet the standards listed in paragraph (a) of this section in model year 2008 and/or 2009, taking into account the phase-in option provided in paragraph (i)(1) of this section. For every vehicle that is certified early, the manufacturer may reduce the number of vehicles that are required by paragraph (i)(1) of this section to meet the standards listed in paragraph (a) of this section by one vehicle. For example, if a manufacturer produces 100 heavy-duty Otto-cycle vehicles in 2007 that meet all of the applicable the standards listed in paragraph (a) of this section, and it produced 10,000 heavy-duty Otto-cycle vehicles in 2009, then only 9,900 of the vehicles would need to comply with the standards listed in paragraph (a) of this section.

(ii) Manufacturers certifying vehicles to all of the applicable evaporative standards listed in paragraph (d) of this section prior to model year 2008 may reduce the number of vehicles that are required to meet the standards listed in paragraph (d) of this section in model year 2008 and/or 2009, taking into account the phase-in option provided in paragraph (i)(1) of this section. For every vehicle that is certified early, the manufacturer may reduce the number of vehicles that are required by paragraph (i)(1) of this section to meet the evaporative standards listed in paragraph (d) of this section by one vehicle.

(3) Manufacturers certifying vehicles to all of the applicable standards listed in paragraph (i)(3)(i) or (ii) of this section (without using credits) and the evaporative standards listed in paragraph (d) of this section prior to model year 2008 may reduce the number of vehicles that are required to meet the standards listed in paragraph (a) of this section in model year 2008 and/or 2009, taking into account the phase-in option provided in paragraph (i)(1)(i) of this section. For every such vehicle that is certified early with sufficiently low emissions, the manufacturer may reduce the number of vehicles that are required by paragraph (i)(1)(i) of this section to meet the standards listed in paragraph (a) of this section by two vehicles. The applicable standards are:

(i) For complete heavy-duty vehicles at and above 8,500 pounds Gross Vehicle Weight Rating but equal to or less than 10,000 Gross Vehicle Weight Rating: 0.100 g/mile NMHC, 0.10 g/mile NO_X, 3.2 g/mile CO, 0.008 g/mile formaldehyde, and 0.02 g/mile PM.

(ii) For complete heavy-duty vehicles at or above 10,000 pounds Gross Vehicle Weight Rating but equal to or less than 14,000 Gross Vehicle Weight Rating: 0.117 g/mile NMHC, 0.20 g/mile NO_X, 3.7 g/mile CO, 0.010 g/mile formaldehyde, and 0.02 g/mile PM.

(j) (1) For model years prior to 2012, for purposes of determining compliance after title or custody has transferred to the ultimate purchaser, for vehicles meeting the applicable emission standards of this section, the applicable compliance limits shall be determined by adding the applicable adjustment from paragraph (j)(2) of this section to the otherwise applicable standard or FEL.

(2) The in-use adjustments are:

(i) 0.1 g/bhp-hr for NO_X.

(ii) 0.100 g/bhp-hr NMHC.

(iii) 0.01 g/bhp-hr for PM.

49. A new § 86.1817–08 is added to Subpart S to read as follows:

§ 86.1817–08 Complete heavy-duty vehicle averaging, trading, and banking program.

Section 86.1817–08 includes text that specifies requirements that differ from § 86.1817–05. Where a paragraph in § 86.1817–05 is identical and applicable to § 86.1817–08, this may be indicated by specifying the corresponding paragraph and the statement ''[Reserved]. For guidance see § 86.1817–05.''

(a) through (o) [Reserved]. For guidance see § 86.1817–05.

(p) The following provisions apply for model year 2008 and later engines. These provisions apply instead of the provisions of paragraphs § 86.1817–05 (a) through (o) to the extent that they are in conflict.

(1) Manufacturers of Otto-cycle vehicles may participate in an NMHC averaging, banking and trading program to show compliance with the standards specified in § 86.1806–08. The generation and use of NMHC credits are subject to the same provisions in paragraphs § 86.1817–05 (a) through (o) that apply for NO_X credits, except as otherwise specified in this section.

(2) NO_X or NMHC (or NO_X plus NMHC) credits may be exchanged between heavy-duty Otto-cycle test groups certified to the engine standards of subpart A of this part and heavy-duty Otto-cycle test groups certified to the chassis standards of this subpart, subject to an 0.8 discount factor (e.g., 100 grams of NO_X credits generated from vehicles would be equivalent to 80 grams of NO_X credits if they are used in the engine program of subpart A of this part, and vice versa). Credits that were previously discounted when they were banked according to § 86.1817–05(c), are subject to an additional discount factor of 0.888 instead of the 0.8 discount factor otherwise required by this paragraph (p)(2). This results in a total discount of 0.8 ($0.9 \times 0.888 = 0.8$).

(3) Credits are to be rounded to the nearest one-hundredth of a Megagram.

(4) To calculate credits relative to the NO_X standards listed in § 86.1816–08 (a)(1)(iv)(A) or (a)(2)(iv)(A) (0.2 or 0.4 grams per mile, respectively) express the standard and FEL to the nearest one-hundredth of a gram per mile prior to calculating the credits. Thus, either 0.20 or 0.40 should be used as the value for ''Std''.

(5) Credits generated for 2008 and later model year test groups are not discounted (except as specified in § 86.1817–05(c) and paragraph (p)(2) of this section), and do not expire.

(6) For the purpose of using or generating credits during a phase-in of new standards, a manufacturer may elect to split an test group into two subgroups: one which uses credits and one which generates credits. The manufacturer must indicate in the application for certification that the test group is to be split, and may assign the numbers and configurations of vehicles within the respective subfamilies at any time prior to the submission of the end-of-year report described in § 86.1817–05 (i)(3). Manufacturers certifying a split test group may label all of the vehicles within that test group with the same FELs: either with a NO_X FEL and an NMHC FEL, or with a single NO_X+NMHC FEL. The FEL(s) on the label will apply for all SEA or other compliance testing.

(7) Vehicles meeting all of the applicable standards of § 86.1816–08 prior to model year 2008 may generate NMHC credits for use by 2008 or later test groups. Credits are calculated according to § 86.1817–05(c), except that the applicable FEL cap listed in § 86.1816–08(a)(1)(ii)(B) or (2)(ii)(B) applies instead of ''Std'' (the applicable standard).

50. A new § 86.1824–07 is added to subpart S, to read as follows:

§ 86.1824–07 Durability demonstration procedures for evaporative emissions.

§ 86.1824–07 includes text that specifies requirements that differ from those specified in § 86.1824–01. Where a paragraph in § 86.1824–01 is identical and applicable to § 86.1824–07, this may be indicated by specifying the corresponding paragraph and the statement ''[Reserved]. For guidance see § 86.1824–01.''. This section applies to gasoline-, methanol-, natural gas- and liquefied petroleum gas-fueled LDV/Ts, MDPVs, and HDVs.

(a) through (f) [Reserved]. For guidance see § 86.1824–01.

51. § 86.1829–01 is amended by revising paragraph (b)(1)(iii)(B) and adding paragraph (b)(1)(iii)(F) to read as follows:

§ 86.1829–01 Durability and emission testing requirements; waivers.

* * * * *

(b) * * *

(1) * * *

(iii)* * *

(B) In lieu of testing an Otto-cycle light-duty vehicle, light-duty truck, or heavy-duty vehicle for particulate emissions for certification, a manufacturer may provide a statement in its application for certification that such vehicles comply with the applicable standards. Such a statement must be based on previous emission tests, development tests, or other appropriate information.

* * * * *

(F) In lieu of testing a petroleum-fueled heavy-duty vehicle for formaldehyde emissions for certification, a manufacturer may provide a statement in its application for certification that such vehicles comply with the applicable standards. Such a statement must be based on previous emission tests, development tests, or other appropriate information.

* * * * *

52. A new § 86.1863–07 is added to subpart S, to read as follows:

§ 86.1863–07 Optional chassis certification for diesel vehicles.

(a) A manufacturer may optionally certify heavy-duty diesel vehicles under 14,000 pounds GVWR to the standards specified in § 86.1816–08. Such vehicles must meet all requirements of Subpart S that are applicable to Otto-cycle vehicles, except for evaporative, refueling, and OBD requirements.

(b) Diesel vehicles optionally certified under this section are subject to the OBD requirements of § 86.005–17.

(c) Diesel vehicles optionally certified under this section may be tested using the test fuels, sampling systems, or analytical systems specified for diesel engines in Subpart N of this part.

(d) Diesel vehicles optionally certified under this section may not be included in any averaging, banking, or trading program.

(e) The provisions of § 86.004–40 apply to the engines in vehicles certified under this section.

(f) Diesel vehicles may be certified under this section to the standards applicable to model year 2008 prior to model year 2008.

(g) Diesel vehicles optionally certified under this section in model years 2007, 2008, or 2009 shall be included in phase-in calculations specified in § 86.007–11(g).

[FR Doc. 01–2 Filed 1–17–01; 8:45 am]

BILLING CODE 6560–50–P

Federal Register

Thursday,
January 18, 2001

Part VI

Department of Labor

Occupational Safety and Health Administration

29 CFR Part 1926

Safety Standards for Steel Erection; Final Rule

DEPARTMENT OF LABOR

Occupational Safety and Health Administration

29 CFR Part 1926

[Docket No. S–775]

RIN No. 1218–AA65

Safety Standards for Steel Erection

AGENCY: Occupational Safety and Health Administration (OSHA), U.S. Department of Labor.

ACTION: Final rule.

SUMMARY: By this notice the Occupational Safety and Health Administration (OSHA) revises the construction industry safety standards which regulate steel erection. The final rule enhances protections provided to workers engaged in steel erection and updates the general provisions that address steel erection. The final rule sets performance-oriented criteria, where possible, to protect employees from steel erection related hazards such as working under loads; hoisting, landing and placing decking; column stability; double connections; hoisting, landing and placing steel joists; and falls to lower levels. To effectuate this, the final rule contains requirements for hoisting and rigging, structural steel assembly, beam and column connections, joist erection, systems-engineered metal building erection, fall protection and training.

DATES: *Effective dates.* This standard will become effective on July 18, 2001.

ADDRESSES: In accordance with 28 U.S.C. 2112(a), the Agency designates the Associate Solicitor for Occupational Safety and Health, Office of the Solicitor of Labor, Room S–4004, U.S. Department of Labor, 200 Constitution Avenue, NW., Washington, DC 20210 to receive petitions for review of the final rule.

FOR FURTHER INFORMATION CONTACT: Ms. Bonnie Friedman, Director, Office of Public Affairs, Room N–3647, Occupational Safety and Health Administration, U.S. Department of Labor, 200 Constitution Avenue, N.W., Washington, DC 20210; telephone: (202) 693–1999. For additional copies of this **Federal Register** notice contact: OSHA, Office of Publications, U.S. Department of Labor, Room N–3101, 200 Constitution Avenue, NW., Washington, DC 20210; telephone: (202) 693–1888. Electronic copies of this **Federal Register** notice, as well as news releases, fact sheets, and other relevant documents, can be obtained from OSHA's web page on the Internet at http://www.OSHA.gov.

SUPPLEMENTARY INFORMATION:

I. Background

Congress amended the Contract Work Hours and Safety Standards Act (CWHSA) (40 U.S.C. 327 *et seq.*) in 1969 by adding a new Section 107 (40 U.S.C. 333) to provide employees in the construction industry with a safer work environment and to reduce the frequency and severity of construction accidents and injuries. The amendment, commonly known as the Construction Safety Act (CSA) [Pub. L. 91–54; August 9, 1969], significantly strengthened employee protection by providing for occupational safety and health standards for employees of the building trades and construction industry in Federal and Federally-financed or Federally-assisted construction projects. Accordingly, the Secretary of Labor issued Safety and Health Regulations for Construction in 29 CFR part 1518 (36 FR 7340, April 17, 1971) pursuant to Section 107 of the Contract Work Hours and Safety Standards Act.

The Occupational Safety and Health Act (the Act) (84 Stat. 1590; 29 U.S.C. 651 *et seq.*), was enacted by Congress in 1970 and authorized the Secretary of Labor to adopt established Federal standards issued under other statutes, including the CSA, as occupational safety and health standards. Accordingly, the Secretary of Labor adopted the construction standards which had been issued under the CSA, in accordance with Section 6(a) of the Act (36 FR 10466, May 29, 1971). The Safety and Health Regulations for Construction were redesignated as part 1926 of 29 CFR later in 1971 (36 FR 25232, December 30, 1971). Subpart R of part 1926, entitled ''Steel Erection,'' incorporating §§ 1926.750 through 1926.752, was adopted as an OSHA standard during this process. The requirements in the existing standard cover flooring, steel assembly, bolting, plumbing-up and related operations. In 1974 a revision in the temporary flooring requirement was made pursuant to a rulemaking conducted under section 6(b) of the Act (39 FR 24361).

Since that time, OSHA has received several requests for clarification of various provisions. The Agency began drafting a proposed rule to revise several provisions of its steel erection standard in 1984 and on several occasions discussed its intention with its Advisory Committee on Construction Safety and Health (ACCSH). The discussions with ACCSH led to the development of several draft notices requesting information or proposing changes to the rule. None of these draft notices was published, nor was public comment sought, except through the proceedings of the Advisory Committee.

In 1986, the Agency issued a Notice of Proposed Rulemaking for subpart M (Fall Protection) and announced that it intended the proposed rule to apply to all walking/working surfaces found in construction, alteration, repair (including painting and decorating), and demolition work, except for five specific areas. Although none of the specific areas pertained to steel erection, the Agency noted that ''Additional requirements to have fall protection for connectors and for workers on derrick and erection floors during steel erection would remain in subpart R—Steel Erection.''

This statement led to confusion. Many of the commenters to the subpart M rulemaking noted that they were not sure whether subpart M or subpart R would govern their activities. In one case, two sets of comments were provided, one to be used if subpart M applied and the other if subpart R applied. In the face of this uncertainty, the Agency decided that it would regulate the fall hazards associated with steel erection in its planned revision of subpart R.

OSHA announced its intention to regulate the hazards associated with steel erection, and in particular the fall hazards associated with steel erection, in a notice published in the **Federal Register** on January 26, 1988 (53 FR 2048). In that notice OSHA stated the following:

> The rulemaking record developed to date indicates that the Agency needs more information in order to develop a revised standard covering fall protection for employees engaged in steel erection activities. The comments received to date have convinced the Agency to develop a separate proposed rule which will provide comprehensive coverage for fall protection in steel erection. OSHA intends, therefore, that the consolidation and revision of fall protection provisions in subpart M do not apply to steel erection and that the current fall protection requirements of Part 1926 continue to cover steel erection until the steel erection rulemaking is completed. Accordingly, in order to maintain coverage under existing fall protection standards pending completion of the separate steel erection fall protection rulemaking, OSHA plans to redesignate existing §§ 1926.104, 1926.105, 1926.107(b), 1926.107(c), 1926.107(f), 1926.500 (with Appendix A), 1926.501, and 1926.502 into subpart R when the Agency issues the final rule for the subpart M rulemaking.

Since that time, the Agency drafted several documents which it presented to

ACCSH for comment. The Agency was also petitioned by affected parties to institute negotiated rulemaking. The first request for negotiated rulemaking was submitted to the Agency in 1990. At that time, it appeared the Agency would soon publish a Notice of Proposed Rulemaking (NPRM) in the **Federal Register** and, therefore, the request was denied. However, affected parties once again made their concerns known, and the Agency delayed publication of the NPRM while it made a further, more comprehensive study of the concerns raised.

OSHA retained an independent consultant to review the fall protection issues raised by the draft revisions to subpart R, to render an independent opinion on how to resolve the issues, and to recommend a course of action. In 1991, the consultant recommended that OSHA address the issue of fall protection as well as other potential revisions to subpart R by using the negotiated rulemaking process.

Based on this recommendation and continued requests for negotiated rulemaking by affected stakeholders, on December 29, 1992, OSHA published a **Federal Register** notice of intent to establish a negotiated rulemaking committee (57 FR 61860). The notice requested nominations for membership on the Committee and comments on the appropriateness of using negotiated rulemaking to develop a steel erection proposed rule. In addition, the notice described the negotiated rulemaking process and identified some key issues for negotiation.

In response to the notice of intent, OSHA received more than 225 submissions, including more than 60 nominations for membership on the Committee and several sets of comments. After an evaluation of the submissions, it was apparent that an overwhelming majority of commenters supported this action, and OSHA decided to go forward with the negotiated rulemaking process. The Agency selected the members of the Committee from among the nominations.

On May 11, 1994, OSHA announced that it had established the Steel Erection Negotiated Rulemaking Advisory Committee (SENRAC) (59 FR 24389) in accordance with the Federal Advisory Committee Act (FACA) (5 U.S.C. App. I), the Negotiated Rulemaking Act of 1990 (NRA) (5 U.S.C. 561 *et seq.*) and section 7(b) of the Occupational Safety and Health Act (OSH Act) (29 U.S.C. 656(b)) to make a recommendation to OSHA on the contents of a Notice of Proposed Rulemaking. Appointees to the Committee included representatives from labor, industry, public interests and government agencies. OSHA was a member of the committee, representing the Agency's interests.

The members of the Committee who participated in the 18 months of negotiations to develop the recommendation to OSHA are: Richard Adams—Army Corps of Engineers, replaced by Donald Pittinger and later replaced by Sam Testerman; William W. Brown—Ben Hur Construction Company; Bart Chadwick—Regional Administrator, Region VIII, Occupational Safety and Health Administration (since retired); James E. Cole—International Association of Bridge, Structural & Ornamental Ironworkers; Stephen D. Cooper—International Association of Bridge, Structural & Ornamental Ironworkers; Phillip H. Cordova—El Paso Crane & Rigging, Inc.; Perry A. Day—International Brotherhood of Boilermakers, Iron Ship Builders, Blacksmiths, Forgers & Helpers, later replaced by David Haggerty; James R. Hinson—J. Hinson Network, Inc.; Jim Lapping—Building and Construction Trades Department (AFL–CIO), replaced by Brad Sant, replaced by Sandy Tillett and later replaced by Phyllis Israel; John R. Molovich—United Steelworkers of America; Carol Murkland—Gilbane Building Company; John J. Murphy—Williams Enterprises of Georgia, Inc., replaced by Fred Codding—NAMOA; Steven L. Rank—Holton & Associates, Ltd.; Ray Rooth—CAL/OSHA; Alan Simmons—International Association of Bridge, Structural & Ornamental Ironworkers; William J. Smith—International Union of Operating Engineers; Ronald Stanevich—National Institute for Occupational Safety and Health (NIOSH) later replaced by Tim Pizatella, Division of Safety Research; C. Rockwell Turner—L.P.R. Construction Co.; and Eric Waterman—National Erectors Association.

SENRAC was chaired by Philip J. Harter, Esq., a nationally recognized expert in negotiated rulemaking and a trained facilitator.

SENRAC began negotiations in mid-June, 1994, and met 11 times as a full Committee. Committee workgroups developed detailed reports and recommendations which were presented at full committee meetings. At each meeting, the Committee debated the workgroups' reports, heard submissions from interested parties, and negotiated to find common ground on regulatory issues. In December 1995, the Committee developed a proposed revision of subpart R. OSHA then developed a preamble and Preliminary Economic Analysis based on the recommended regulatory text. The Agency presented this document to SENRAC for their review and approval. After Committee approval, on July 24, 1997, SENRAC presented OSHA with a consensus proposed standard at a signing ceremony held at the Department of Labor in Washington, DC.

On August 13, 1998, OSHA issued a notice of proposed rulemaking (NPRM) for subpart R—Steel Erection (63 FR 43452). The proposal set a time period, ending November 12, 1998, during which interested parties could submit written comments. In addition, the proposal provided a notice of a public hearing to begin on December 1, 1998. OSHA received 367 submissions, including testimony and documentary evidence, in response to the Notice of Proposed Rulemaking (NPRM). In addition, OSHA received 55 submissions, including requests to testify at the public hearing, in response to the notice of hearing contained in the NPRM.

The informal public hearing was held on December 1–11, 1998, with Administrative Law Judge John Vittone presiding. Judge Thomas Burke and Judge Richard Stansel-Gamm also presided at times during the nine days of hearings. At the close of the hearing, Judge Stansel-Gamm established a post-hearing comment period. The first part of the post hearing comment period, ending March 11, 1999, allowed participants to submit additional data and information. Participants were then permitted to submit briefs, arguments and summations until April 12, 1999. OSHA received 27 post-hearing submissions.

After analyzing the rulemaking record, the Agency developed draft final regulatory text. In accordance with the SENRAC's groundrules, OSHA convened a public meeting of SENRAC on December 16, 1999 (64 FR 66595) to consult with the Committee on the Agency's draft final rule. The purpose of the consultation meeting was to obtain comments and feedback from the Committee on OSHA's proposed revisions, prior to the issuance of a final standard. Among the topics discussed at the meeting were erection bridging, scope, fall protection, slippery surfaces, and joist holes. The discussions at the meeting aided OSHA in finalizing the draft steel erection standard.

On June 12, 2000, Judge Vittone certified the rulemaking record, including the hearing transcript and all written submissions to the docket, which closed the record for this proceeding.

A wide range of employers, businesses, labor unions, trade

associations, state governments, and other interested parties contributed to the development of this record. Many of these parties also participated in the negotiated rulemaking process. OSHA appreciates these efforts to help develop a rulemaking record that provides a sound basis for the promulgation of a final rule for subpart R—Steel Erection.

OSHA believes that the final subpart R will substantially reduce the significant risk of death and serious injury that has continued to confront workers engaged in steel erection. In addition, the clarified and revised language of the final rule and consolidation of relevant provisions will help employers and employees to understand the requirements of the steel erection standard. The final rule provides additional protection and closes gaps in the current rule's coverage of steel erection hazards. These improvements have been achieved through the SENRAC negotiations, and the record developed during the proposed rule comment period, public hearing and post-hearing comment period.

In this final rule, OSHA provides notice to all affected employers and employees of these revisions to subpart R, which the Agency believes are necessary to protect employees. OSHA believes the clarified language of the final rule will help employers to protect their employees more effectively through a standard that is easier to understand and comply with.

II. Pertinent Legal Authority

The purpose of the Occupational Safety and Health Act, 29 U.S.C. 651 *et seq.* (''the Act''), is ''to assure so far as possible every working man and woman in the Nation safe and healthful working conditions and to preserve our human resources.'' 29 U.S.C. 651(b). To achieve this goal, Congress authorized the Secretary of Labor to promulgate and enforce occupational safety and health standards, 655(b) (authorizing promulgation of standards pursuant to notice and comment), 654(b) (requiring employers to comply with OSHA standards)).

A safety or health standard is a standard ''which requires conditions, or the adoption or use of one or more practices, means, methods, operations, or processes, reasonably necessary or appropriate to provide safe or healthful employment'' (29 U.S.C. 652(8)).

A standard is reasonably necessary or appropriate within the meaning of Section 652(8) if it substantially reduces or eliminates significant risk, and is economically feasible, technologically feasible, and cost effective, and is consistent with prior Agency action or is a justified departure, is supported by substantial evidence, and is better able to effectuate the Act's purposes than any national consensus standard it supersedes.

A standard is technologically feasible if the protective measures it requires already exist, can be brought into existence with available technology, or can be created with technology that can reasonably be expected to be developed. *American Textile Mfrs. Institute* v. *OSHA,* 452 U.S. 490, 513 (1981) (''*ATMI*''); *AISI* v. *OSHA*, 939 F.2d 975, 980 (D.C. Cir. 1991) (''AISI'').

A standard is economically feasible if industry can absorb or pass on the costs of compliance without threatening its long-term profitability or competitive structure. See *ATMI,* 452 U.S. at 530 n. 55; *AISI*, 939 F.2d at 980. A standard is cost effective if the protective measures it requires are the least costly of the available alternatives that achieve the same level of protection. *ATMI*, 453 U.S. at 514 n. 32; *International Union, UAW* v. *OSHA*, 37 F.3d 665, 668 (D.C. Cir. 1994) (''*LOTO III*'').

Section 6(b)(7) authorizes OSHA to include among a standard's requirements labeling, monitoring, medical testing and other information gathering and transmittal provisions. 29 U.S.C. 655(b)(7).

All standards must be highly protective. See 58 FR at 16614–16615; *LOTO III*, 37 F.3d at 669. Finally, whenever practical, standards shall ''be expressed in terms of objective criteria and of the performance desired.'' *Id.*

As discussed in various places in this preamble, OSHA has determined that hazards associated with steel erection activities pose significant risks to employees and that the provisions of the final rule are reasonable and necessary to protect affected employees from those risks. The Agency estimates that full compliance with the existing and revised steel erection standard will reduce the risk of identified hazards (preventing 30 fatalities and 1,142 injuries annually). This constitutes a substantial reduction of significant risk of material harm for the exposed population of approximately 56,840 steel erection employees.

OSHA has determined that there are no technological obstacles to compliance with the final rule. As discussed in Section IV, Summary and Explanation of the Final Rule, the rulemaking record indicates that many of the requirements contained in the final rule are already in general use throughout the industry.

OSHA also concludes that compliance is economically feasible because, as documented in the Final Economic Analysis, all regulated sectors can readily absorb or pass on compliance costs and the standard's costs, benefits, and compliance requirements are consistent with those of other safety standards.

The record indicates clearly that steel erection employees face significant risks and that compliance with the final steel erection standard is reasonably necessary to protect affected employees from that risk. OSHA has considered and responded to all substantive comments regarding the proposed steel erection standard on their merits in Section IV, Summary and Explanation of the Final Rule. In particular, OSHA evaluated all suggested changes to the proposed rule in terms of their impact on worker safety, their feasibility, their cost effectiveness, and their congruity with the OSH Act.

III. Hazards Involved

Accidents during steel erection continue to cause injuries and fatalities at construction sites. Based on a review of compliance problems and public comments over the past several years, OSHA has determined that the current standard, which has been in place with little change for 30 years, needs a complete revision to provide greater protection and eliminate ambiguity and confusion. OSHA believes that reorganizing the standard's requirements into a more logical sequence will help employers to understand better how to protect their employees from the hazards associated with steel erection and will thus reduce the incidence of injuries and fatalities in this workforce.

OSHA tracks workplace fatalities through its Integrated Management Information System (IMIS) which captures a large percentage of the fatalities in the steel erection industry. However, detailed information on the conditions that give rise to steel erection accidents is less readily available. The best available data on steel erection hazards and accidents are derived from NIOSH and industry studies and from the Bureau of Labor Statistics (BLS).

During SENRAC negotiations, OSHA staff and a Committee statistical workgroup analyzed accident information derived from OSHA's IMIS system (Exs. 9–14A and 9–42). This data provided the best source of accident descriptions. However, it was frequently difficult to determine several critical elements, such as the precise activity being undertaken at the time of the accident; whether the victim was a trained ironworker; or the type of structure under construction or repair.

The following examples from OSHA's IMIS reports of accident investigations illustrate the types of accidents that occur in steel erection:

1. March 14, 1997: One fatality. Bundles of decking were being placed on bar joists that spanned approximately 40 feet. In the area where the decking was being landed, the joists had not been welded at both ends and ''x'' bracing had not been installed between the joists. Three bundles of decking had been landed near the ends of the joists. When two employees attempted to land a fourth bundle farther out on the unattached and unbraced joists, the joists moved and fell to the concrete slab below fatally injuring one employee. OSHA believes that compliance with the joist requirements of § 1926.757(e)(4) and (e)(5) of the final rule could have prevented this accident. Paragraph (e)(4) requires that no bundle of decking may be placed on steel joists until all bridging has been installed and anchored and all joist bearing ends are attached. In addition, paragraph (e)(5) requires that the edge of construction loads be placed within one foot of the bearing surface of the joist end.

2. October 1, 1997: One fatality. A worker was on a 24 foot steel I-beam attempting to connect to a 21 foot high steel column. The worker was on a ladder placed on the concrete slab. The column displaced from the foundation bolts during the connecting process, knocking the worker from the ladder and fatally injuring him. OSHA believes that compliance with the column anchorage requirements of § 1926.755(a) of the final rule could have prevented this accident by requiring that all columns be anchored by a minimum of four anchor rods (anchor bolts) and if applicable, paragraph (b) of that section requires that any repair, replacement or field modification of anchor rod (anchor bolt) be approved by the structural engineer of record.

3. October 1, 1997: One fatality. An employee was working at the 20 foot level re-positioning steel bar joists when three of the joists twisted and fell to the concrete slab below fatally injuring the employee. OSHA believes that compliance with the requirements of § 1926.757(b)(3), and possibly § 1926.757(a)(8), of the final rule could have prevented this accident. Paragraph (b)(3) requires that unless joists have been panelized, they shall be attached to the support structure, at least at one end, immediately upon placement in the final erection position and before additional joists are placed. In addition, if the joists are in bays of 40 feet or more, final rule paragraph (a)(8) requires that these joists be bolted to the structure to prevent such unintentional displacement of long limber joists.

4. January 27, 1998: One fatality. An employee fell 23 feet 6 inches while walking on a steel rafter. The employee finished bolting-up a steel purlin to the rafter and was in the process of walking back to get another purlin when he fell. OSHA believes that compliance with the fall protection requirements of the final rule could have prevented this accident. § 1926.760(a)(1) of the final rule requires that, with some exceptions, each employee engaged in steel erection be protected from falls when working on a surface more than 15 feet above a lower level. This includes workers engaged in bolt-up activities.

5. August 12, 1999: One fatality. A worker inadvertently picked up a marked, unsecured wooden cover over a 3′ × 3′ skylight hole. The worker accidently stepped into the hole and fell to the ground below. OSHA believes that compliance with the requirements of § 1926.754(e)(3) for covering roof and floor openings could have prevented this accident.

For its assessment of baseline risk in steel erection, OSHA used 1994–98 fatality data from the U.S. Bureau of Labor Statistics' (BLS) Census of Fatal Occupational Injuries. Based on analysis of the BLS data, OSHA estimates that structural metal workers experience an average of 35 fatalities per year. OSHA determined that, of the 35 fatalities, approximately 30 deaths per year are caused by factors that are addressed by the final standard (see the final economic analysis, Chapter III, summarized below in Section V). Furthermore, OSHA analysis of the results from the BLS Annual Survey of Occupational Injuries and Illnesses for the years 1994 to 1998 identifies an average of 2,279 lost-workday injuries per year whose circumstances would be addressed by provisions in the final standard. With an estimated workforce of 56,840 iron workers in construction ([BLS, Occupational Employment Statistics Survey, 1998]; see the final economic analysis), OSHA concludes that these baseline fatality and injury levels are high and clearly pose a significant risk to these workers that justifies Agency action.

In order to provide a more useful database for future rulemaking, OSHA has developed and implemented an enhanced coding system to be used by OSHA compliance officers when recording construction fatality investigations for entry into the Agency's IMIS. This system was implemented nationally on January 1, 1997. The data OSHA is now recording when making fatality investigations will provide a greater source of detailed information indicating how and where construction fatalities occur.

Three years after this final rule is implemented, OSHA will use the improved fatality data to evaluate the rule's effectiveness. Based upon this evaluation, a determination will be made as to whether modifications to the standard are necessary.

OSHA believes that this final rule will enhance employee protections by adding new requirements to close gaps in current coverage, strengthening many of the existing requirements, and promoting compliance by clarifying and consolidating current requirements. For further discussion of accident rates and significant risk, see Section V, Summary of the Final Economic Analysis.

Based on the available information referenced in OSHA's economic analysis and other record evidence, OSHA finds that structural metal workers are faced with a significant risk of serious injury or death that can be reduced substantially by the revisions contained in this final rule. The Agency estimates that each year approximately 56,840 workers in the United States suffer 2,279 serious (*i.e.,* lost-workday) steel erection injuries. In addition, an estimated 35 steel erection workers die every year as a result of hazardous workplace conditions that are preventable. OSHA estimates that, of the 35 annual steel erection fatalities, 8 fatalities will be averted by full compliance with the existing standard and that an additional 22 fatalities will be averted by compliance with the final standard. Additionally, of the 2,279 lost-workday steel erection injuries occurring annually, OSHA estimates that 1,142 injuries will be averted by full compliance with the existing and final standards (303 injuries will be averted by full compliance with the existing standard and 838 injuries will be averted by full compliance with the final standard; figures do not add to the total due to rounding). Therefore, OSHA finds it both necessary and appropriate to proceed with final rulemaking for steel erection activities.

IV. Summary and Explanation of the Final Rule

The following discussion explains how the final rule corresponds to or differs from the proposed steel erection standard and the existing standard, how SENRAC's negotiations and the comments and testimony presented on each provision influenced the drafting of the final rule and why we believe the provisions will protect steel erection

workers. Except where otherwise indicated, proposed provisions which did not elicit comment have been promulgated as proposed, for reasons stated in the preamble to the proposed rule which is incorporated by reference (63 FR 43457).

In addition to revisions to subpart R, Steel Erection, this rulemaking makes necessary revisions to Subpart M of this Part, Fall Protection, for purposes of consistency. Current § 1926.500(a)(2)(iii) states: ''Requirements relating to fall protection for employees performing steel erection work are provided in § 1926.105 and in subpart R of this part''. This final rule revises the language of § 1926.500(a)(2)(iii) to read: ''Fall protection requirements for employees performing steel erection work (except for towers and tanks) are provided in subpart R of this part''. This revision clarifies that steel erection is covered exclusively by subpart R. In addition, since tanks and towers are excluded from the scope of subpart R, this final rule adds paragraph § 1926.500(a)(2)(iv) to subpart M to clarify that fall protection requirements for tanks and communication and broadcast towers are covered by § 1926.105. This new provision states: ''Requirements relating to fall protection for employees engaged in the erection of tanks and communication and broadcast towers are provided in § 1926.105''. The final revision to subpart M is to revise § 1926.500(a)(3)(iv). Section 1926.500(a)(3)(iv) currently states that the fall protection systems and criteria contained in § 1926.502 do not apply to steel erection. Since the final steel erection standard refers to § 1926.502 for the criteria for its fall protection systems, it is necessary to revise this paragraph to exclude only tanks and communication and broadcast towers from § 1926.502. The criteria for tanks and communication and broadcast towers will continue to be covered by § 1926.104. Section 1926.500(a)(3)(iv) is revised read as follows: ''Section 1926.502 does not apply to the erection of tanks and communication and broadcast towers. (Note: Section 1926.104 sets the criteria for body belts, lanyards and lifelines used for fall protection during tank and communication and broadcast tower erection. Paragraphs (b), (c) and (f) of § 1926.107 provide definitions for the pertinent terms.)

Section 1926.750 Scope

Paragraphs (a) through (c) of § 1926.750 describe the scope of subpart R. In the proposed rule, the scope section was in two paragraphs, with the first designated ''Scope'' and the second designated ''Application.'' To avoid confusion, these sub-titles have been eliminated, and the entire section designated ''scope.''

Paragraph (a) provides that subpart R applies to employers engaged in steel erection activities involved in the construction, alteration and/or repair of any type of building or structure—single and multi-story buildings, bridges, and other structures—where steel erection occurs. The paragraph makes clear that differences in coverage under the previous standards between single and multi-story (or tiered) buildings, as well as buildings and other types of steel structures, are no longer relevant. All the provisions of revised subpart R now apply irrespective of such distinctions. Paragraph (a) also includes a ''Note,'' which sets out numerous examples of structures where steel erection may occur (this is not an exclusive list). This list was also in the proposed rule.

As indicated in the proposal, SENRAC discussed at length the differences between construction and maintenance since the construction industry performs millions of workerhours per year of ''industrial maintenance'' work. 29 CFR 1910.12(b) defines ''construction work'' as follows:

> Construction work means work for construction, alteration, and/or repair, including painting and decorating.

OSHA has interpreted this definition to include alteration, repair, renovation, rehabilitation and remodeling of existing facilities or structures.

The distinction between construction and maintenance is based on the nature of the work being performed rather than on the job title of the worker performing it. SENRAC acknowledged that the scope of proposed subpart R was governed by the definition of construction work contained in § 1910.12(b) which applies to all of part 1926.

The final rule defines steel erection (in § 1926.751) as ''the construction, alteration or repair of steel buildings, bridges and other structures, including the installation of metal decking and all planking used during the process of erection.'' In the proposed rule, steel erection was defined as ''the erection of'' these structures. That unintentionally conflicted with proposed paragraph (a), which stated that steel erection activities also included ''alteration and repair,'' activities which include work on structures that have already been erected. The definition of steel erection in the final rule was changed to correct this error.

One commenter stated that the phrase ''alteration and/or repair'' is unclear in that some of these activities may be considered construction work, while others may be considered maintenance. The commenter suggests that OSHA define these terms (Ex. 13–183).

All OSHA construction standards apply to ''alteration and/or repair.'' These terms play a significant role in determining the scope of all of these standards. With respect to subpart R, there was little discussion during the SENRAC negotiations of how to define these terms. The Agency has decided that it would be inappropriate to define them separately under these circumstances. Therefore, definitions for them have not been added in the final rule. OSHA's general interpretation of these terms will apply to the steel erection standard in the same way as for other construction standards.

The requirements of subpart R apply to employers engaged in steel erection unless otherwise specified. Subpart R does not apply to electrical transmission towers, communication and broadcast towers, or tanks.

Paragraph (b)(1) sets out a list of specific steel erection activities covered under subpart R. These steel erection activities include hoisting, laying out, placing, connecting, welding, burning, guying, bracing, bolting, plumbing and rigging structural steel, steel joists and metal buildings; installing metal deck and siding systems, miscellaneous metals, ornamental iron and similar materials; and moving point-to-point while performing these activities.

In the proposed rule, the erection of curtain walls and window walls, as well as ''laying out,'' ''placing,'' ''burning,'' ''guying,'' ''bracing'' and ''plumbing'' structural steel, steel joists and metal buildings were inadvertently omitted from this paragraph; this has been corrected in the final rule. Otherwise the paragraph is the same as proposed.

A definition of ''structural steel'' has also been added to help clarify this section. It means a steel member, or a member made of a substitute material (such as fiberglass, aluminum, composites, etc.). Structural steel includes, but is not limited to, steel joists, joist girders, purlins, columns, beams, trusses, splices, seats, metal decking, girts, and all bridging, and cold formed metal framing which is integrated with the structural steel framing of a building. At the hearing, SENRAC members (Ex. 205X; p. 258) explained that in some instances buildings are now constructed with members that are configured like structural steel members, but are made of a substitute material (for example,

solid web beams made of fiberglass). Since the erection process, the configuration of the structural framework and the members are the same as in a structure made of structural steel, these are included in the definition.

Cold formed metal framing is included in the definition of ''structural steel'' only when it is integrated with the structural steel framing of a building. An example of where it is *not* integrated with structural steel framing is in residential construction where such framing is referred to as ''metal studs'' and is installed by carpenters.

Paragraph (b)(2) lists a number of activities that are covered by subpart R when they occur during and are a part of the steel erection activities described in paragraph (b)(1). OSHA has changed the first sentence to explicitly state that coverage depends on whether an activity occurs *during* and is a part of steel erection. For example, there are standing seam metal roofing systems that incorporate a layer of insulation under the metal roof. In the installation process, a row of insulation is installed, which is then covered by a row of metal roofing. Once that row of roofing is attached, the process is repeated, row by row, until the roof is completed. The installation of the row of insulation is a part of the installation of the metal roofing (which is steel erection), and so the installation of the insulation is covered by subpart R.

A note to paragraph (b) of the proposed rule listed activities ''which could be considered covered by this subpart when they occur during the process of steel erection activities * * *'' Some commenters stated that the list as proposed was confusing and subject to misinterpretation, since it was difficult to determine when the activities would be covered by subpart R. One stated that the examples are much too broad and confusing, subject to misinterpretation, and that a literal interpretation would include the installation of handrails, gaskets, sealants, doors and windows within a building as steel erection whether or not it was actually a part of steel erection activities (Ex. 201X; p. 54). Others stated that the text of the scope paragraph was adequate and the note should be eliminated in order to avoid misinterpretation (Ex. 13–163); that the note is confusing because of its length, location and the implication that all listed activities, performed on listed structures, constitute steel erection; and that the note should be relocated to a non-mandatory appendix (Ex. 13–183). One commenter (Ex. 13–37) noted that many of the listed activities are equally likely to occur on structures with other types of structural frames (such as concrete, masonry or wood) which are covered by other subparts in 29 CFR 1926. Examples of activities that can be found on all buildings, regardless of frame type, are ''installing metal decks, siding systems, miscellaneous metals, ornamental iron and similar materials.'' In this commenter's view, the notes should be deleted, since it will be difficult for employers to have a clear understanding of which subpart directly applies to the different structural frames (Ex. 13–31). This commenter also expressed concerns with the overly broad scope of the proposed standard as described in § 1926.750 and the effect this would have on achieving a clear understanding of, and compliance with, the technical provisions of the standard. That commenter stated that it is not clear how subpart R and the other requirements in Part 1926 would apply to employers doing very similar work, based on the building's structure and whether steel erection is being done.

The changes to the first sentence of the list in the final rule are intended to address these concerns and give a clearer indication of when the listed activities are covered.

Several commenters asserted that the list of activities include some which were outside the scope of proposed § 1926.750(a). For example, paragraph (a) specifically excludes tanks, yet water containment structures, bins, and hoppers are listed as examples of structures where steel erection may occur. These commenters indicated that those examples should be omitted and that OSHA should include the following definition of tank: ''A container made out of material including metal, fiberglass, wood or concrete that can be any shape including: cylindrical, rectangular, conical, spherical, spheroidal or elliptical, and may be used, constructed, altered and/or repaired to process, hold, store or treat any substance in various states including under a vacuum, at atmospheric pressure or pressurized'' (Exs. 13–296, 13–207, 13–207D, 13–310, 13–317, and 13–316).

The Agency has added a definition of tank, but one that is simpler than the one suggested above. The definition of tank in the final rule is, ''a container for holding gases, liquids, or solids.'' Although tanks are excluded, as the Agency explained in the preamble to the proposed rule, subpart R does cover the steel structure that supports a tank (63 FR 43458). Also, water containment structures other than tanks, bins and hoppers do not meet the definition of tank, so these examples are included in the associated list of examples as proposed by SENRAC.

Others wanted to expand the list. One commenter (Ex. 205X; p. 233) stated that ''structural precast'' should be included in the list of examples because steel erectors erect many segments of a structure, including columns, beams, as well as architectural materials mounted on steel frames. Another commenter (Ex. 205X; pp. 239–265) stated that ''structural precast'' should be included because the associated hazards during erection and hoisting, etc. of structural shapes made out of something other than steel are identical to those associated with steel.

A commenter (Ex. 13–129) requested that ''architectural precast concrete'' be removed from the list. His reasons included: (1) activities associated with architectural precast concrete are regulated under subpart M; and (2) an erector would not consider the erection of a precast concrete panel as steel erection—-the process is simpler, safer, and faster than steel erection.

When OSHA established SENRAC, it stated that the scope of subpart R to be addressed by the Committee was limited to steel erection and did not include the erection of precast concrete (59 FR 25848). Furthermore, in an October 18, 1994 letter to the General President of the United Brotherhood of Carpenters and Joiners of America, OSHA reiterated the decision that subpart R would not cover precast concrete.

The final rule does not cover the erection of precast concrete. The final list of conditionally covered activities does not include erection of precast concrete. In the proposed rule, the ''Note'' that listed activities that could be covered by subpart R included ''architectural precast concrete''. Because OSHA clearly stated to the public that precast erection would not be covered by subpart R, we have removed ''architectural precast concrete'' from the listed activities in § 1926.750(b)(2) of the final rule. In addition, because precast concrete is sometimes mounted on steel frames, ''stone and other architectural materials mounted on steel frames'' has been changed to ''stone and other non-precast concrete architectural materials mounted on steel frames.''

Paragraph (c) provides that the duties of controlling contractors under this rule include, but are not limited to, the duties specified in § 1926.752(a) (approval to begin steel erection), § 1926.752(c) (site layout), § 1926.755(b)(2) (notification of repair, replacement or modification of anchor bolts), § 1926.759(b) (protection from

falling objects) and § 1926.760(a)(2)(i) (perimeter safety cables).

The reference to the controlling employer provisions and the notation that this is not an exclusive list of responsibilities were added to the final rule to be consistent with OSHA's multi-employer policy. In the proposal, in setting out particular duties of controlling employers, it was not OSHA's intent to eliminate their responsibilities under the multi-employer doctrine. Therefore, the final rule specifically states that the controlling contractors' duties are not limited to those specified in the rule.

Numerous commenters, most of which were general contractors, objected to imposing any obligations on controlling contractors who were not performing the steel erection work themselves. In their view, requiring employers to take actions to protect the employees of other employers is inappropriate and not permitted under the OSH Act. For example, Massman Construction Company (Ex. 13–16); Robinson Quality Constructors (Ex. 13–36); Hayner Hoyt Corporation (Ex. 13–223); St. Louis Bridge Company (Ex. 13–244); J. F. O'Healy Construction Corporation (Ex. 13–358), and other commenters wrote:

> We also adamantly oppose the process of SENRAC taking upon themselves to expand the scope of the OSHA Act of 1970 by introducing a definition of controlling contractor that expands the scope of OSHA. If controlling contractor language as presently written is permitted in Subpart R, it is our belief that the precedent set by such an action will lead to this same controlling contractor language being introduced into future revisions to other OSHA standards such as scaffolding, stairways and ladders, fall protection, and excavation.

Another series of comments OSHA received also opposed the controlling contractor provisions. The comments written by RK Building Systems (Ex. 13–168); Fleischer-Seeger Construction Corporation (Ex. 13–169); Massman Construction Co. (Ex. 170A); WM. R. Montgomery and Associates, Inc. (Ex. 13–170C); Robinson Quality Constructors (Ex. 13–170D); J.F. O'Healy Construction Corporation (Ex. 13–327); and many other commenters stated:

> We are adamantly opposed to the introduction of controlling contractor in the proposed standard revisions. If the proposed standard becomes law, the general contractor or construction manager will become responsible for many of the activities of the steel erector subcontractors. This will be in spite of the fact that the general contractor or construction manager subcontracts with the steel erector because that particular subcontractor has expertise in performing steel erection work. The subcontractor should be allowed to perform its work without OSHA mandated intervention between the general contractor or construction manager and the subcontractor.

OSHA recognizes that steel erection subcontractors are hired for their expertise in performing steel erection work. In that respect, steel erection subcontractors are similar to other subcontractors, all of whom are hired because they are experts in their specialties. But while each subcontractor has special expertise, it is typically the general contractor or construction manager who controls the overall project and coordinates the work of the subcontractors. The general contractor's or construction manager's control over the project gives it the ability to see that safety and health hazards created by subcontractors are corrected. Accordingly, when the general contractor or construction manager has reason to know of violative conditions created by a subcontractor, has the authority to prevent or correct that condition by reason of its supervisory authority over the worksite, and fails to take appropriate action to prevent or correct the violation, the general contractor or construction manager is liable for the violation as a controlling employer. See OSHA Directive No. CPL 2–00.124 (Dec. 10, 1999). OSHA stresses that the general contractor or construction manager is not strictly liable for subcontractor violations but is only responsible if it fails to take reasonable and feasible steps to discover and correct unsafe or unhealthful working conditions on the work site. *Id.*

OSHA's policy of holding controlling employers liable for violations they can prevent or correct by reason of their supervisory capacity has been upheld by a number of courts and the Review Commission. See, for example, *Universal Construction Company*, Inc. v. *OSHRC*, 182 F.3d 726 (10th Cir., 1999); *R.P. Carbone Constr. Co.* v. *Occupational Safety and Health Review Comm'n*, 166 F.3d 815 (6th Cir., 1998); *Grossman Steel & Aluminum Corp.*, 4 BNA OSHC 1185 (Rev. Commission, 1975); *Marshall* v. *Knutson Construction Co.*, 566 F. 2d 596 (8th Cir., 1977); *Centex-Rooney Construction Co.*, 16 BNA OSHC 2127 (Rev. Commission 1994).

OSHA has, by regulation, placed specific obligations on controlling employers for the protection of other employers' employees in a number of standards. See, for example, § 1910.1200(e)(2), Hazard Communication; § 1910.146, Permit-Required Confined Spaces; and § 1926.1101(d), Asbestos. Therefore, the assertion that the Agency does not have the authority to place such obligations on controlling contractors in subpart R is unpersuasive.

SENRAC found that many controlling contractors have already accepted responsibility for the five specific duties now codified in the final rule. This was corroborated in testimony by several general contractors/construction managers at the rulemaking hearing. (See, for example, Ex. 201X, pp. 35–38; Ex. 201X, p. 63; Ex. 201X, pp. 93–95 and 105–107; Ex. 201X, pp.150–151; and Ex. 201X, p.211.) Specifically, the following is Mr. Jenkins' response (Ex. 201X, pp. 35–38) when questioned during testimony at the public hearing:

> QUESTION: In fact, most of the [controlling contractor] requirements that have been mentioned through cross examination you seem to be doing already.
>
> MR. JENKINS: That's correct, because we try to run safe job sites. (Id.)

Furthermore, controlling contractors were represented on SENRAC by William Brown representing the Associated General Contractors of America (AGC), Rockwell Turner representing the Associated Builders and Contractors (ABC), and Carol Murkland representing Gilbane Building Company. They endorsed the proposed rule, which contained these same provisions. Accordingly, it is both necessary and appropriate to place these obligations on controlling contractors.

Section 1926.751 Definitions

The final rule definition section lists and defines major terms used in the standard. Approximately twenty of the proposed definitions, all developed by SENRAC with input from the Steel Joist Institute (SJI), the Steel Deck Institute (SDI) and others, received no comments nor were they discussed in testimony at the hearing. Accordingly, these definitions are promulgated as proposed and are not discussed in the final rule.

In the proposal, OSHA defined the terms ''clipped connection'', ''cold formed joist'', and ''composite joists''. Because these terms are not used in the final rule, OSHA has removed the definitions for these terms. The term ''clipped connection'' is considered an ''equivalent connection device'' under § 1926.756(c)(1) and has been moved to Appendix H.

The remaining proposed definitions did receive considerable attention during this rulemaking. Accordingly, the following discussion addresses these definitions in more detail.

''Column.'' This term is defined in the final rule to mean a load-carrying vertical member that is part of the primary skeletal framing system.

Columns do not include ''posts'' such as wind posts, and posts supporting stair landings, wall framing, mezzanines and other substructures (see definition of ''post''). As discussed later in this preamble (see discussion of final § 1926.755), the Agency determined that a definition for column is needed to clarify which members are subject to the requirements of the column anchorage provisions in § 1926.755.

''Competent person.'' This term is already defined in § 1926.32(f), which applies to all construction work. A ''competent person'' is a person who is capable of identifying existing and predictable hazards in the surroundings or working conditions which are unsanitary, hazardous, or dangerous to employees, and who has authorization to take prompt corrective measures to eliminate them. Because the term appears so frequently in this standard, OSHA is repeating this definition in subpart R. One commenter (Ex, 13–153) suggested adding ''typically, but not necessarily, the competent person on a steel erection project will be the person responsible for the steel erection.'' OSHA does not believe the recommended language clarifies the definition. Also, the term is used in all construction applications and the Agency does not feel it is appropriate to change the definition for steel erection.

''Connector'' means an employee who, working with hoisting equipment, is placing and connecting structural members and/or components. This definition is unchanged from the proposal. Several commenters (Exs. 13–365, 13–334; 13–193A; 13–173; and 13–215) stated that this definition does not clearly indicate what activities are performed by a connector. They specifically argued that the definition does not indicate whether spreading and securing of bar joists would be considered connecting. One witness testified (Ex. 201X; p. 81) that the proposed definition was so broad that it would include almost any operation performed by ironworkers. OSHA disagrees with these commenters. SENRAC intended to make this definition as narrow as possible, and the Agency believes that the final definition carries out this intention. The definition is very specific; connecting is distinguished from other steel erection activities by the elements in the definition. For example, spreading and securing bar joists by hand would not be considered connecting, since that work is not done ''with hoisting equipment.'' Therefore, an employee is a ''connector'' only when working with ''hoisting equipment''. This includes placing components as they are received from hoisting equipment, and then connecting those components while hoisting equipment is overhead.

''Constructibility.'' This term is defined to mean the ability to erect structural steel members in accordance with subpart R without having to alter the over-all structural design. As discussed in the preamble of final rule § 1926.755, the Agency has determined that a definition for constructability is needed for clarification. In the proposal, several provisions contained exceptions where ''design and constructibility do not allow'' compliance. However, the term ''design and constructibility'' was not defined. The term was included in the proposal to allow exemptions from specific requirements where the overall design of the structure prevents compliance with such requirements. In other words, in order to comply with the requirements, the overall design of the structure would have to be altered. Since ''constructibility'' includes ''design'' constraints, the Agency has replaced ''structural design and constructability'' with ''constructibility.'' This term is used in several places in the final rule, specifically § 1926.754(e)(2)(i), § 1926.756(e)(1) and (e)(2), and § 1926.757(a)(8)(ii).

''Controlled Decking Zone (CDZ).'' This term is defined to mean an area in which certain work (for example, initial installation and placement of metal deck) may take place without the use of guardrail systems, personal fall arrest systems, restraint systems or safety net systems provided that alternative procedures (for example, controlled access combined with worker training, specified work practices and use of control lines or equivalent) are implemented. Controlled decking zones are discussed in final rule § 1926.760(c).

''Controlling contractor.'' OSHA defines this term to mean a prime contractor, general contractor, construction manager, owner acting as the general contractor, or any other legal entity that has overall responsibility for the construction of the project—its planning, quality, and completion.

One witness (Ex. 201X; p. 8–39) suggested that a company would be considered a controlling contractor under this definition if it controls the schedule at the worksite, dictates when other contractors will do their work, makes it a practice to inform other contractors on the site of safety problems and requires the other contractors to take corrective action. He further argued that, while these are not all of the relevant factors, they are typical of the types of authority that controlling contractors have.

Some commenters stated that the definition of a controlling contractor was vague and could be interpreted to include a ''private or public owner, the project architect, general contractor or other contractors on a multiple prime contractor project[s].'' The provision defines the term with respect to the extent of control of the worksite. A controlling contractor is an entity that has general supervisory authority over the worksite such that it can correct safety and health violations itself or have others correct them. So, an owner, project architect or any other entity that has this authority would be considered a controlling contractor.

The proposed phrase ''by contract with other parties'' has been omitted in the final rule because an employer may have the ''overall responsibility for the project, its planning, quality and completion'' without it provided for by contract.

''Critical lift'' means a lift that (1) exceeds 75% of the rated capacity of the crane or derrick, or (2) requires the use of more than one crane or derrick. A commenter (Ex. 13–210) stated that critical lifts are not unique to steel erection and should be addressed in OSHA's crane standard, 29 CFR 1926.550. While OSHA agrees that these types of lifts occur in industries other than steel erection, there currently are no special requirements in OSHA's crane standard that specifically address these types of lifts. Since cranes are the primary equipment used in steel erection to lift/hoist steel members, the Agency feels it is important to address critical lifts in the steel erection standard. As stated in the proposal, this definition was developed by a SENRAC workgroup.

''Decking hole.'' This term is defined to mean a gap or void more than 2 inches (5.1 cm) in its least dimension and less than 12 inches (30.5 cm) in its greatest dimension in a floor, roof or other walking/working surface whereas ''opening'' means a gap or a void large enough to present a fall hazard. Pre-engineered holes in cellular decking are not included in the definition of ''decking hole''.

SENRAC believed that it was important to distinguish between holes that are too small to fall through (but are a tripping and falling object hazard), and holes which are large enough to fall through. This allowed the proposed rule to have safety requirements tailored to whether the hole presents a tripping/falling object hazard or a fall hazard. It therefore used the terms ''decking hole'' for small holes and ''opening'' for large holes.

Two commenters stated that the definitions of hole and opening should be consistent with the definitions in the general fall protection standard for construction, 29 CFR subpart M, § 1926.500(b) (Ex. 13–210 and 13–222). They pointed out that the definition of ''opening'' in the proposal is different from the definition for that term in § 1925.500(b). Another commenter (Ex. 13–1) noted that the proposal's definitions of holes and openings are consistent with the definitions in ANSI A1264.1–1995, although the ANSI standard does not apply to construction.

The definition of ''decking hole'' in subpart R, which has both a minimum and maximum measurement—2 inches in its least dimension and 12 inches in its greatest dimension—refers to small holes. In contrast, the definition of ''hole'' in subpart M (§ 1926.500(b)) includes large as well as small holes; it has only a minimum measurement—2 inches or more in its least dimension. Additionally, in subpart R, the term ''opening'' refers to holes large enough to be a fall hazard. In subpart M, the term ''opening'' refers to gaps or voids large enough to be a fall hazard, but only in walls (or partitions).

The definition of ''decking hole'' and ''opening'' in the proposal were developed by SENRAC specifically for the steel erection industry for this purpose. While the terms are inconsistent with comparable terms in subpart M, the Committee found that the proposal's definitions reflect the steel erection industry's use of these terms. While consistency between standards is desirable, the subpart M terms would not meet the needs of this standard. Therefore, the Agency has retained the subpart R terms from the proposal.

''Derrick floor.'' This term is defined to mean the elevated floor of a building or structure that has been designated to receive hoisted pieces of steel prior to their final placement. A commenter (Ex. 13–308) suggested changing the term to ''staging floor'' since it is not clear if the references in § 1926.754(e)(5)(i) and (e)(5)(ii) are intended to refer to floors used to support crane derricks or staged materials. SENRAC has noted that the term ''derrick floor'' is a term commonly used in the steel erection industry to refer to the floor on which the erection process for the floors above is taking place. The derrick floor may or may not have a derrick on it but it is considered the erection floor and serves as a staging area for construction loads that are necessary to perform the work at the levels above. Since the term is a generally understood term within the industry, the Agency feels that the term ''staging area'' is too limiting and may lead to confusion over the intended use of the floor. The Agency concurs with SENRAC's recommended term and is promulgating the final definition as proposed.

''Double connection seat'' means a structural attachment that, during the installation of a double connection, supports the first member while the second member is connected. This definition replaces the proposed definition of ''seat''. The definition was modified to be consistent with the revisions made to final § 1926.756(c). ''Seat'' was changed to ''double connection seat'' to clarify that these devices are used in double connections.

''Erection Bridging'' means the bolted diagonal bridging that is required to be installed prior to releasing the hoisting cables from the steel. One commenter stated that the term should be replaced with ''bridging'' (Ex. 13–308). He asserts that ''erection bridging'' incorrectly implies that the bridging is temporary and required for erection proposes only, similar to erection bracing, erection bolts, etc. However, the Agency disagrees. Erection bridging refers to bridging that must be installed during the erection process, and becomes a permanent part of the structure. This term was recommended by SJI, and accepted, as a term that is commonly understood by the industry. Therefore, the term is unchanged in the final rule.

''Fall restraint system.'' The final rule defines a fall restraint system as a fall protection system that prevents the user from falling any distance. The system is comprised of either a body belt or body harness along with an anchorage, connectors and other equipment necessary for the system to prevent the worker from falling any distance. The other components typically include a lanyard, and may also include a lifeline and other devices. When used while working on a horizontal surface, the system prevents the worker from stepping past the edge of the walking/working surface (in contrast, a fall arrest system limits the distance of a fall).

In the proposed rule, the Agency used the term ''fall restraint (positioning device).'' In the final rule, OSHA has deleted the parenthetical reference to a positioning device, modified the definition, and added a separate definition for the term ''positioning device.'' The term used in the proposal was defined as a system used to prevent an employee from falling more than two feet, consisting of an anchorage, connectors, a body belt or full body harness and a lanyard, lifeline or suitable combination of these, and permitting self-rescue. The reasons for changing the term and its definition are discussed in the discussion of final rule § 1926.760.

''Final interior perimeter.'' This is a new term in the final rule and means the perimeter of a large permanent open space within a building such as an atrium or courtyard. This does not include openings for stairways, elevator shafts, etc. The term, used in § 1926.760(a)(2), describes those areas that are considered a final perimeter of the structure but are not exterior perimeters.

''Hoisting equipment.'' This term is defined to mean commercially manufactured lifting equipment designed to lift and position a load of known weight to a location at some known elevation and horizontal distance from the equipment's center of rotation. ''Hoisting equipment'' includes but is not limited to cranes, derricks, tower cranes, barge-mounted derricks or cranes, gin poles and gantry hoist systems. The definition for hoisting equipment includes all commercially manufactured equipment that is used in steel erection to lift loads to a specified location. The intent was to ensure that this term is not strictly limited to cranes. The definition was also crafted to prevent a steel erector from claiming as ''connectors'' employees who are not true connectors (such as detailers) by providing them with a ''come-a-long'' to meet the definition of connector. A ''come-a-long'' is *not* included in the definition of hoisting equipment. A ''come-a-long'' is a mechanical device, usually consisting of a chain or cable attached at each end, that is used to facilitate movement of materials through manual force and leverage. It has been excluded from the definition of ''hoisting equipment'' because it is manually powered. A commenter (13–308) suggested deleting ''an erection'' from the proposed definition since it is not necessary in the context of the definition. OSHA agrees with the commenter that the phrase is not necessary. In addition, this commenter suggested that ''come-a-longs'' should be considered hoisting equipment when they are used for overhead loads. The Agency does not agree with the commenter on this point. A ''come-a-long'' is used to adjust the position of a member, not to ''hoist'' it from one level to another. Hoisting equipment has purposely been defined to only include the traditional equipment used for hoisting steel members into place. A ''come-a-long'' does not fit into this definition. OSHA has also made editorial changes to the definition to make it clearer.

''Opening.'' This term is defined to mean a gap or void 12 inches (30.5 cm) or more in its least dimension in a floor, roof or other walking/working surface. For the purposes of this subpart, skylights and smoke domes that do not meet the strength requirements of § 1926.754(e)(3) are regarded as openings (see the discussion on ''decking hole'' for a more detailed explanation).

''Personal fall arrest system.'' The final rule defines a personal fall arrest system (PFAS) as a system used to arrest an employee in a fall from a working level. It consists of an anchorage, connectors and body harness, and may also include a lanyard, deceleration device, lifeline or suitable combinations of these. The final rule's definition deletes the proposed reference in the proposal to body belts, since these are no longer permitted to be used in fall arrest systems.

''Positioning device system.'' As discussed above under the definition of ''fall restraint system,'' the final rule distinguishes the terms fall restraint system and positioning device system. Consequently, a separate definition for positioning device system has been added. It defines this term as a body belt or body harness rigged to allow an employee to be supported on an elevated, vertical surface, such as a wall or column, and work with both hands free while leaning.

This definition omits the reference in the proposal's definition of ''fall restraint (positioning device)'' to the ability to self-rescue. That capability is assured by the fact that the final rule, in paragraph § 1926.760(d)(1), requires positioning device systems to comply with the requirements of § 1926.502. Section 1926.502(e) requires positioning device systems to limit the worker's fall to no more than two feet, which allows workers using these devices to rescue themselves in the event of an arrested fall. When using ''fall restraint'' and ''positioning device systems,'' employers do not need to provide employees with self rescue devices. The reason such devices are not required is that ''fall restraint'' and ''positioning device systems'' must be designed to prevent employees from being exposed to fall hazards.

''Post.'' This term is defined to mean a structural member with a longitudinal axis that is essentially vertical, that: (1) Weighs 300 pounds or less and is axially loaded (a load presses down on the top end), or (2) is not axially loaded, but is laterally restrained by the above member. Posts typically support stair landings, wall framing, mezzanines and other substructures. As discussed in the summary and explanation of final rule § 1926.755, the Agency feels that a definition for post is needed to clarify the application of § 1926.755. (See also the definition of ''Column'' in § 1926.751.)

''Project structural engineer of record.'' This term is defined in the final rule to mean the registered, licensed professional responsible for the design of structural steel framing and whose seal appears on the structural contract documents. One commenter (Ex. 13–356) suggested expanding the definition by adding ''and other structural systems'' after structural steel framing. The necessity for such an addition has not been demonstrated; the definition is promulgated unchanged.

''Qualified person.'' This term is also defined in § 1926.32(m), which applies to all construction work covered by part 1926. A ''qualified person'' means one who, by possession of a recognized degree, certificate, or professional standing, or who by extensive knowledge, training, and experience, has successfully demonstrated the ability to solve or resolve problems relating to the subject matter, the work, or the project. As with the definition of ''competent person'', because of the frequent use of the term in this standard, and as a matter of convenience for users, the definition is repeated in subpart R even though the definition already exists in § 1926.32. One commenter (Ex. 13–153) suggested changing the definition to be more specific to steel erection. However, the record does not show a significant need to have a different definition.

''Steel Erection.'' This term means the construction, alteration or repair of steel buildings, bridges and other structures, including the installation of metal decking and all planking used during the process of erection. This is a revision of the definition in the proposal, which defined steel erection as ''the erection of steel buildings, bridges and other structures, including the installation of steel flooring and roofing members and all planking and decking used during the process of erection.'' One commenter indicated that steel erection is understood to include alteration and/or repair activities, but that the definition in the proposal was limited to the erection of entire structures (Ex. 13–183).

The definition in the proposal unintentionally conflicted with the proposed § 1926.750(a), which stated that steel erection activities also included ''alteration and repair,'' activities which include work on structures that have already been erected. The definition of steel erection in the final rule has been changed to correct this error.

''Steel joist.'' This term is defined to mean an open web, secondary load-carrying member of 144 feet (43.9 m) or less, designed by the manufacturer, used for the support of floors and roofs. This term does not include structural steel trusses or cold-formed joists. A commenter (Ex. 13–153) suggested adding ''designed by the manufacturer'' to this definition to make it consistent with that of steel joist girder and differentiate it from a steel truss which is designed by the structural engineer of record. OSHA agrees with this suggestion and has changed the definition in the final rule accordingly.

''Structural steel'' means a steel member, or a member made of a substitute material (such as, but not limited to, fiberglass, aluminum or composite members). These members include, but are not limited to: steel joists, joist girders, purlins, columns, beams, trusses, splices, seats, metal decking, girts, and all bridging, and cold formed metal framing which is integrated with the structural steel framing of a building. This definition was added because it is an important term that is used in the scope section of this standard. Also, at the hearing and the December 16, 1999 SENRAC consultation meeting, SENRAC members explained (Ex. 205X, pp. 230–233, 248–249, and 257–271; Ex. 206X, p. 70; and Ex. 208X, pp. 144–145) that in some instances buildings are now constructed with members that are configured like structural steel members, but are made of a substitute material (for example, solid web beams made of fiberglass). Since the erection process, configuration of the structural framework and the members are the same as in a structure made of structural steel, these are included in the definition as well.

''Systems-engineered metal building.'' This term replaces the term ''pre-engineered metal buildings'' that was used in the proposed rule. The final rule definition of systems-engineered metal building is essentially the same as the proposed definition of pre-engineered metal building. It means a field-assembled building system consisting of framing, roof and wall coverings. Typically, many of these components are cold-formed shapes. These individual parts are fabricated in one or more manufacturing facilities and shipped to the job site for assembly into the final structure. The engineering design of the system is normally the responsibility of the systems-engineered metal building manufacturer. The definition was developed by a SENRAC

workgroup. Although no comments were received on the definition, the term itself was changed for reasons explained in the discussion of § 1926.758.

''Tank'' is a new definition. It means a container for holding gases, liquids or solids. Although, as explained in the discussion of § 1926.750(a), subpart R does not cover tanks, it covers the erection of steel structures supporting tanks.

Section 1926.752 Site Layout, Site-Specific Erection Plan and Construction Sequence

This section of the final rule sets forth OSHA's requirements for proper communication between the controlling contractor and the steel erector prior to the beginning of the steel erection operation and proper pre-planning by the steel erector to minimize overhead exposure during hoisting operations. Appendix A, which is referred to in this section, also provides guidelines for employers who elect to develop a site-specific erection plan. OSHA's current standard does not contain provisions similar to those being adopted in this section.

SENRAC recognized that under current practices in the industry, erection decisions are often made in the field when the steel arrives. SENRAC believes that pre-planning and coordination are currently not occurring to the extent they should be (63 FR 43461).

Paragraph (a) Approval To Begin Steel Erection and (b) Commencement of Steel Erection

Paragraph (a) requires that the controlling contractor ensure that written notifications be provided to the steel erector that (1) The concrete in the footings, piers, and walls and the mortar in the masonry piers and walls have cured to a level that will provide the proper strength to support any forces imposed on the concrete during steel erection; and (2) that any repairs, replacements, and modifications made to anchor bolts meet the requirements of § 1926.755(b). The criteria for adequate strength for concrete footings depend on the results of required American Society for Testing and Materials (ASTM) standard test methods. (Note: requirements for the controlling contractor to notify the steel erector of any repair, replacement or modification to anchor bolts are found in § 1926.755(b))

SENRAC found that many accidents involving collapse could have been averted had adequate pre-erection communication and planning occurred (63 FR 43461). This section of the rule is designed to ensure proper communication and pre-planning between contractors pouring concrete footings, contractors making repairs to repairing anchor bolts, the controlling contractor, and the steel erector. This communication must take place prior to the beginning of steel erection. The written notification can be transmitted electronically.

Some commenters (Exs. 13–4, 13–7, 13–26, 13–63A and 13–193A) stated that a controlling contractor would not know if concrete had cured to the point that steel erection could begin. They go on to state that steel erectors know more about how much concrete needs to cure, and that they should be the ones to determine if the proper information has been provided so that steel erection can start.

OSHA agrees that both the controlling contractor and steel erector usually would not know if concrete has cured unless the ASTM standard test method has been performed. This requirement is similar to the OSHA requirement for concrete construction found in § 1926.703(e)(ii), which requires that formwork not be removed from cast-in-place concrete ''* * * until the concrete has been properly tested with an appropriate ASTM standard test method designed to indicate the concrete compressive strength, and the test results indicate that the concrete has gained sufficient strength to support its weight and superimposed loads.'' Since the footings, piers and walls intended to be covered by this proposed section will be supporting the steel structure being erected, OSHA, as well as the Committee, wishes to ensure that this information is provided to the steel erector before the steel is placed on the concrete.

In the proposed rule, the controlling contractor would have had to provide the ASTM test results to the steel erector. The final rule has been changed to reflect that the controlling contractor must ensure that the test results are provided to the steel erector. This rephrasing will allow the controlling contractor to have a contractor familiar with the ASTM test methods perform the test and provide the results to the steel erector.

Commenters also stated (Exs. 13–164, 13–264, 13–334 and 13–359) that the steel erection contractor, not the controlling contractor, was the best person to evaluate site conditions and approve the commencement of steel erection. The final rule, however, does not contain a broad-based requirement that the controlling contractor evaluate whether the site is in proper condition to begin steel erection. Rather, it sets out two specific aspects of the site that the controlling contractor must evaluate before approving the commencement of steel erection. The controlling contractor is in a better position to gather the required information than the steel erector, since much of this information must be obtained from persons over whom the steel erector has no control, such as the laboratory testing the concrete samples or the concrete contractor repairing the damaged anchor bolts. OSHA has also added a new provision, § 1926.752(b), to ensure that a steel erector does not begin erecting steel before receiving the information required in § 1926.752(a).

A commenter (Ex. 13–149) suggested that the word ''must'' in the proposed § 1926.752(a) be replaced with the word ''shall.'' Although these words have the same meaning, the word ''shall'' is used throughout this standard, and the change was made in the interest of consistency.

Paragraph (c) Site Layout

Paragraph (c)(1) and (c)(2) of the final rule requires that the access roads and a drained and graded area be provided and maintained by the controlling contractor. These conditions enable the steel erector to move around the site and perform necessary operations in a safe manner. The provision does not apply to roads outside of the construction site.

Some commenters (Exs. 13–26, 13–63A, 13–193A, 13–215 and 13–241) pointed out that safe access roads are already required in § 1926.20 (General Safety and Health Provision); § 1926.550 (Cranes and Derricks); and § 1926.602(a)(3)(i) (Material Handling Equipment standards). However, these standards do not protect employees from the hazards addressed in § 1926.752(b). For example, these standards do not address adequate access roads into and through the site. As noted earlier, OSHA has attempted to bring together the provisions that are unique to steel erection work in subpart R.

Testifying as to the need for this provision in the steel erection industry, Steve Rank, a member of SENRAC who represented the insurance interest, stated the following:

> I am talking about the site conditions. Normally, you don't talk about fatalities when you talk about site conditions, but the statistics that OSHA never got were those disabling injuries where ironworkers' feet were crushed or legs were crushed because of trying to off-load their material on job sites. Structural steel iron has to be unloaded, sorted, and stood up before you can get it in the air. We as an industry not only want to

focus on the fatalities, but also those disabling injuries that have plagued our industry. (208X; p.34)

The final rule adds an exception for roads outside the construction site in response to a commenter (Ex. 13–214) who objected to the proposed provision because there are worksites that have city or county owned access roads. When such conditions exist, the controlling contractor does not have any authority to correct problems with the road, or to assign lay down areas for steel erectors to prepare their work. OSHA agrees with the commenters that there are circumstances where the controlling employer would not have such control, such as where a city or county owns the access roads. For this reason, OSHA has added language to the final rule to provide an exception where the controlling contractor does not have control over the road.

Paragraph (c)(2) requires that the controlling contractor provide and maintain a firm, properly graded, drained area, readily accessible to the work and with adequate space for the safe storage of materials and the safe operation of the erector's equipment. As stated in the proposed rule, SENRAC found that the controlling contractor is in the best position to minimize the hazards associated with improper site layout and conditions. The provisions in paragraphs (c)(1) and (c)(2) were derived from the AISC code of standard practice for steel buildings and bridges (Ex. 9–36).

Some commenters (Exs. 13–279, 13–210, 13–311, 13–193 and 13–164) indicated that the term ''adequate'' in the requirement in (c)(1) should be defined to delineate what would be acceptable for roads. After considering this suggestion, OSHA has concluded that no definition could be created that would encompass all possible site conditions. For this reason, OSHA has left the word adequate in the final rule, and it will be the responsibility of the controlling contractor to determine that a road is properly graded to support equipment without the danger of rollover and properly drained so that equipment can be safely maneuvered.

One commenter (Ex. 13–155) objected to the provision on the grounds that the steel erector, rather than the controlling contractor, is best able to determine access and work area needs for the work. At the hearing, a witness (Ex. 208X; p. 78–79) testified that the steel erector does not have any ability to say where the access roads and storage areas will be placed, or who can work in those areas. He went on to state that these decisions are usually made by the controlling contractor. Another witness (Ex. 202X; p. 42) testified that when he needs the access road or storage area smoothed out, he contacts the general contractor, or controlling contractor.

The record shows that it is the controlling contractor that is in the best position to ensure that the necessary changes are made (see, for example, Ex. 201X; pp. 93–95). Further, in these situations, the controlling contractor is able to make necessary changes. It will either have the personnel and equipment, or can assign the task to another contractor, to maintain site conditions. For these reasons, OSHA has not made any changes to the provision regarding the responsibility to maintain adequate site conditions.

Paragraph (d) Pre-planning of Overhead Hoisting Operations

Paragraph 1926.752(d) requires that all hoisting operations in steel erection be pre-planned to ensure that they comply with the requirements of § 1926.753(d), the paragraph regulating ''working under loads.''

The purpose of final rule paragraph (d) (paragraph (c) of the proposed rule), is to address the hazards associated with overhead loads. Specifically, these hazards include failure of the lifting device, which would create a crushing hazard, and items falling from the load, which creates a struck-by and crushing hazard, among others. Given the nature of the loads used in steel erection, either of these events could result in serious injury or death.

After reviewing comments made on this paragraph (Exs. 13–170G, 13–210, 13–218, 13–263, and 13–334) OSHA recognized that the title of the proposed paragraph—''Overhead protection'' was confusing in that it suggested that this paragraph dealt with the actual process of making lifts. In response to the comments, OSHA has changed the proposed title of paragraph (d) from ''overhead protection'' to ''pre-planning of overhead hoisting operations'' to reflect that § 1926.752(d) addresses requirements for the pre-planning of lifts and not the requirements for the actual hoisting and rigging of materials.

Commenters stated (Exs. 13–4, 13–7, 13–26, 13–63A, 13–180, 13–193, 13–215, and 13–334) that there are times when materials being lifted would be required to have a swing area that would cover areas where workers are present. In their view, this requirement would cause the controlling contractor to clear the whole site. This is not what the Committee intended nor is it what the provision requires. In addition, a similar requirement already exists in OSHA's crane and derrick standard. § 1926.550(a)(19) requires that ''all employees shall be kept clear of loads about to be lifted and of suspended loads.'' The intent of final rule 1926.752(d) is to require employers to pre-plan lifts to facilitate compliance with the overhead load requirements. Through pre-planning, employers can adjust schedules and assignments to avoid worker exposure to overhead loads. For a more detailed discussion see preamble for § 1926.753(d)—working under loads.

Paragraph (e) Site-specific Erection Plan

Paragraph § 1926.752(e) sets out criteria for site-specific erection plans. The plans must be developed by a qualified person and be available at the worksite. The standard does not require such plans for all steel erection worksites; three specific provisions of this rule allow them as alternatives to specific provisions of the standard: One, is when an employer wishes to provide ''equivalent protection'', rather than deactivating or making safety latches on hoisting hooks inoperable (§ 1926.753(c)(5)). The second is when an employer provides an alternative erection method for setting certain steel joists detailed in § 1926.757(a)(4). The third is when an employer places decking bundles on steel joists and, under certain circumstances, must document in an erection plan that the structure can support the load (§ 1926.757(e)(4)(i)). This paragraph is unchanged from the proposal. OSHA has provided Appendix A as a guideline for establishing the components of a site-specific erection plan, as recommended by SENRAC. In the proposed rule, OSHA explained why it was not requiring the employer to establish a site-specific erection plan for every site (63 FR 43462). During initial discussions, SENRAC considered a requirement for every steel erection employer to develop a site-specific erection plan in writing for every project but decided that such a requirement would be unnecessarily paperwork-intensive, especially for small businesses. A site-specific erection plan will be easier to complete once the erector has developed a model plan. Some site-specific conditions that might lead an employer to rely on an alternative rather than the requirements specified in paragraphs § 1926.753(c)(5), § 1926.757(a)(4), and § 1926.757(e)(4)(i), and examples of possible alternative methods, are addressed in the discussion of these paragraphs later in this preamble.

Section 1926.753 Hoisting and Rigging

Rigging and hoisting of steel members and materials are essential activities in

the steel erection process. This section sets safety requirements to address the hazards associated with these activities. In this final rule, new paragraphs (a) and (b) were added to clarify the application of the general crane requirements to subpart R. As indicated in the proposed introductory language, the new provisions recommended by SENRAC were designed to supplement rather than displace the requirements in § 1926.550.

Paragraph (a) of the final rule provides that all provisions of § 1926.550, the general construction requirements for cranes and derricks, apply to hoisting and rigging operations in steel erection except for § 1926.550(g)(2), the general requirements for crane or derrick suspended personnel platforms. Provisions for the use of suspended platforms in steel erection are in paragraph (c)(4) of this section.

Paragraph (b) provides that, in addition to the § 1926.550 provisions, the requirements in paragraphs (c) through (e) of this section apply as well. Final rule paragraphs (a) and (b) were added because hoisting safety is critical in steel erection operations and the § 1926.550 provisions are, in many respects, outdated.

Paragraph (c) General

Paragraph (c) contains the requirements for pre-shift inspections of cranes and rigging used in steel erection. This paragraph is redesignated from the proposal where it was paragraph (a).

Paragraph (c)(1) requires that a competent person must perform a pre-shift visual inspection of the cranes to be used for steel erection. The inspection must meet the requirements of § 1926.550 along with the supplemental requirements listed in paragraph (c) of this section. The SENRAC committee recognized that OSHA's crane standard incorporates ANSI B30.5–1968, Safety Code for Crawler, Locomotive, and Truck Cranes (Ex. 9–114), which does not reflect the most current safety requirements for modern cranes and the heavier loads they are now able to hoist. As a result, the updated crane requirements in ANSI B30.5–1994, Mobile and Locomotive Cranes standard (Ex. 9–113), are used as the principal basis for the supplemental provisions added in paragraph (c) of this section. SENRAC believed the additional inspection criteria were needed to ensure that safe equipment and procedures would be used to perform the specialized and potentially hazardous types of hoisting operations in steel erection. These include the use of cranes to hoist employees on personnel platforms (§ 1926.753(c)(4)); to suspend loads over certain employees (§ 1926.753(d)); and to perform multiple lifts (§ 1926.753(e)). In addition, SENRAC believed that a more frequent inspection is needed for cranes being used for steel erection. According to SENRAC, an inspection prior to each shift is needed to provide an added measure of protection for the specialized and potentially hazardous hoisting operations (63 FR 43462).

Section § 1926.550 requires pre-shift inspections by a competent person but does not spell out the detailed inspection requirements contained in the new § 1926.753. SENRAC determined and OSHA agrees that subpart R must address all issues relating to safety during steel erection. Hoisting operations are integral to steel erection and defects in hoisting equipment can harm steel erection workers in many ways. Therefore, it is necessary to include these requirements in this standard.

The complete visual inspection must be performed before each shift by a competent person. This person might be the operator or oiler of the hoisting equipment being used or, on a large project, the master mechanic who checks each crane. The pre-shift visual inspection must also include ''observation for deficiencies during operation'' and is anticipated to take between 10 and 20 minutes (63 FR 43462). At a minimum, the inspection must include the items listed in paragraphs (c)(1)(i)(A) through (L); namely, inspection of (A) all control mechanisms for maladjustment; (B) control and drive mechanisms for excessive wear of components and contamination by lubricants, water or other foreign matter; (C) safety devices, including, but not limited to, boom angle indicators, boom stops, boom kick-out devices, anti-two block devices, and load moment indicators where required; (D) air, hydraulic, and other pressure lines for deterioration or leakage, particularly those which flex in normal operation; (E) hooks and latches for deformation, chemical damage, cracks, or wear; (F) wire rope reeving for compliance with hoisting equipment manufacturer's specifications; (G) electrical apparatus for malfunctioning, signs of excessive deterioration, dirt, or moisture accumulation; (H) hydraulic system for proper fluid level; (I) tires for proper inflation and condition; (J) ground conditions around the hoisting equipment for proper support, including ground settling under and around outriggers, ground water accumulation or other similar conditions; (K) the hoisting equipment for level position and; (L) the hoisting equipment for level position after each move and setup during the shift.

Paragraph (c)(1)(ii) requires that if the inspection identifies a deficiency, the competent person must immediately determine whether the deficiency constitutes a hazard. The paragraph as proposed did not specify who was to make this determination. Because this type of determination requires the skills of a competent person and since the inspection is conducted by a competent person, the paragraph in the final rule explicitly states that a competent person must make the determination as to whether the deficiency constitutes a hazard. There were no comments about this paragraph.

Paragraph (c)(1)(iii) of the final rule requires that if a deficiency is determined to constitute a hazard, the hoisting equipment shall be removed from service until the deficiency is corrected. There were no objections to this paragraph.

The proposed rule contained a provision (proposed rule paragraph (a)(1)(iv)) that would have required a certification record of the pre-shift inspection of the hoisting equipment to indicate that the inspection has been completed. This certification would have included the date the hoisting equipment items were inspected, the signature of the inspector, and a serial number or other identifier for the hoisting equipment inspected. It is the Agency's policy to minimize paperwork burdens on employers. In light of the fact that the pre-shift inspection required in § 1926.550(a)(5) does not require a written certification, OSHA has omitted this requirement from the final rule.

Paragraph (c)(1)(iv) makes the operator responsible for operations under his/her direct control and gives the operator the authority to refuse any load that he/she deems unsafe. The Inpernational Union of Operating Engineers (Ex. 208X; p.55) believed it was necessary to clarify the operator's responsibilities during hoisting operations. OSHA agrees that the operator must have the authority to shut down unsafe operations of the crane. This requirement is the same as the parallel requirement in the ANSI B30.5–1968 standard for operating practices that are currently incorporated into 1926.550.

The most current ANSI standard, B30.5–1994, gives the authority to the supervisor. OSHA has adopted the approach in the previous ANSI standard because the crane operator is in a better position to make these assessments than

the supervisor. This view was explained in a letter from a professional engineering firm to the secretary of the B30 committee (Ex. 9–133):

> Control of a heavy-lifting operation solely under the direction of a supervisor or any other person who may be less qualified than he, is not prudent. The crane operator has instrumentation in the crane to base his action upon, and should be the ultimate person to make decisions about the capacity and safety of both the machine and lifting operations.

Unlike a qualified crane operator, who has the training and experience to make informed decisions about handling a crane load, a supervisor may not have the qualifications and experience necessary for safe crane operation.

Paragraph (c)(2) requires a qualified rigger to inspect the rigging prior to each shift. Two commenters (Exs. 13–148 and 13–222) stated that there is a need for a definition of ''qualified rigger'' to clarify what specific qualifications are required for that status. One commenter (Ex. 13–149) indicated that the proposal is unclear as to who is responsible for ensuring that a rigger is qualified. This commenter also asserted that this provision would encourage unsafe acts by untrained people who want to cut time and costs. Another commenter (Ex. 202X; p.7) also noted that the qualifications of a rigger were not defined. According to this commenter, this is a significant issue because a lot of responsibility is placed on the qualified rigger in the standard.

OSHA is not adding a definition for a ''qualified rigger.'' As discussed below, the Agency believes sufficient guidance exists on assessing whether a rigger is ''qualified'' under this standard.

A qualified rigger is defined as a ''qualified person'' who is performing the inspection of the rigging equipment. Based on the definition of a ''qualified person'', a qualified rigger must have demonstrated successfully the ability to solve or resolve rigging problems. Since there are no degree or certification programs for ''riggers'', they must have extensive experience to support this demonstration. The final rule requires the rigger to follow the requirements in § 1926.251, Rigging Equipment for Material Handling, which requires significant knowledge in the areas it specifies. It should be noted that a SENRAC member (Ex. 208X; p.69) testified that he is a member of an industry committee that will issue an industry standard defining the qualifications of a qualified rigger. OSHA believes that the industry will develop criteria in the near future.

Paragraph (c)(3) prohibits the use of the headache ball, hook or load to transport personnel except as provided in paragraph (c)(4) of this section. These practices are widely recognized as unsafe because of the risk of falling off the ball, hook or load (or, in a case where the load falls, falling with the load). No comments were received on this paragraph.

Paragraph (c)(4) states that employers engaged in steel erection work do not have to comply with the requirements of § 1926.550(g)(2)—Crane or Derrick Suspended Personnel Platforms if they hoist employees on a personnel platform. § 1926.550(g)(2) requires an employer to demonstrate that the use of conventional methods to access the work station ''would be more hazardous or is not possible because of structural design or workday conditions'' if the employer wants to hoist employees on a personnel platform. Final rule paragraph (c)(4) is slightly re-worded from the proposed rule for clarity. The preamble to the proposed rule explained why SENRAC believed that hoisting employees using personnel platforms is safer than climbing, why elevators cannot be used, and why hazards will be reduced by using these platforms (63 FR 43464). The work station during the steel erection process moves rapidly as pieces of structural steel are connected to each other and elevators and stairways usually cannot be installed until much of the structure has been completed. Exposure to fall hazards and the other hazards associated with erection and dismantling of scaffolds for extremely short term activities are eliminated by the use of a personnel platform.

Some commenters objected to the provision as proposed because they believe that it is feasible for steel erectors to use conventional methods of gaining access to the work station. AGC of Metropolitan Washington DC (Ex. 13–334) did not believe a blanket exemption from the personnel platform requirements for those who do steel erection work was a good idea. It was also noted by the a Department of Energy (Ex. 13–31) that relaxing the hoisting regulations for steel erection would create a double standard, since all other trades would not have the same exemption even though they often work side by side. DOE suggested that the paragraph be deleted.

The SENRAC committee believed that many steel erection activities, particularly those that are repetitive and of short duration, such as bolting-up, can be performed more safely, with greatly reduced exposure to fall hazards, when done from a personnel platform. This is largely due to the fact that the ironworker's workstations are high up, far apart, and change fairly rapidly. Use of the personnel platform would eliminate the numerous climbs up and down scaffolds, long ladders, etc. that would otherwise be required. OSHA has not relaxed the other requirements of the hoisting standard and only allows the use of personnel platforms as long as they comply with the crane standard. These requirements include performing the lift in a slow, cautious and controlled manner; holding pre-lift meetings; conducting trial lifts; requiring a safety factor of ten; and the use of engineering controls, such as anti-two blocking protection and controlled lowering capability. The rulemaking record does not indicate that the workstations of the other trades change as rapidly and span the same large distances as those of the ironworkers.

The term ''notwithstanding'' was removed from the proposed standard and the paragraph re-written for clarification of its intent.

Paragraph (c)(5) prohibits safety latches on hooks from being deactivated or made inoperable except when a qualified rigger has determined that the hoisting and placing of purlins and single joists can be performed more safely by doing so, or when equivalent protection is provided in a site specific erection plan.

SENRAC found that there are some activities in steel erection in which it is safer to hoist lighter members with a deactivated safety latch. One example is when deactivating the latch eliminates the need for a worker to climb up or onto an unstable structural member, such as a single bar joist, to unhook the member. The first part of paragraph (c)(5) requires all latched hooks to be latched in the absence of a determination by the qualified rigger that using the latch is unsafe. The second part of paragraph (c)(5) states that if the latch is deactivated without such a determination by a qualified rigger, the employer must have some form of equivalent protection in its site-specific erection plan.

Paragraph (d) Working Under Loads

Paragraph (d) (proposed rule paragraph (c)) requires routes for suspended loads to be pre-planned and prohibits employees from working under a hoisted load except for workers engaged in initial connection activities or employees who are necessary for unhooking the load. It also lists three specific requirements that must be met when these exceptions apply. The materials shall be rigged by a qualified

rigger so that unintentional displacement is prevented. Also, hooks with self closing safety latches (or their equivalent) must be used to prevent components from slipping out of the hook. The requirements in paragraph (d) were patterned after the California Code of Regulations (Ex. 9–24D1), which regulates and limits exposure to overhead loads to occasional, unavoidable instances.

In the proposal preamble, OSHA noted that although overhead passes normally can be avoided, they cannot be entirely eliminated due to the complexity of modern construction, which requires that many activities take place concurrently. On many building sites, existing buildings, structures, streets, overhead lines and similar factors make it necessary to move loads over the same work areas throughout the course of the project. On some large projects, such as the construction of power plants, many hoisting operations take place simultaneously. In such situations, cranes must be located throughout the site to provide access to every part of the project. Scheduling the work to avoid moving loads over occupied work areas is not always feasible. Although paragraph (d) allows loads to be moved overhead, it requires the employer to limit such exposure.

The final rule allows workers doing initial connection work and those required to hook or unhook loads to work under the load because overhead exposure is generally unavoidable during these activities and while hooking and unhooking loads. This is similar to other OSHA rules that allow employees to work under loads in specific work situations where it has been sufficiently demonstrated that it is infeasible to accomplish the work otherwise. For example, § 1926.704(e) of the Concrete and Masonry standard provides, ''no employee shall be permitted under precast concrete members being lifted or tilted into position except those employees required for the erection of those members.'' Section 1926.705(k)(1) of that standard allows some employees to work under suspended loads as well:

> No employees, except those essential to the jacking operation, shall be permitted in the building/structure while any jacking operation is taking place unless the building/structure has been reinforced sufficiently to ensure its integrity during erection.

An argument can be made in opposition to this paragraph that it appears to be in conflict with § 1926.550(a) of the crane standard, which explicitly prohibits employees from being exposed to suspended loads in section 1926.550(a)(19). However, the record has no data to indicate that the new rule will result in an increase in exposure to an overhead load, and OSHA is relying upon the expertise of SENRAC that the new rule will indeed lower that exposure.

As explained above, OSHA already has two exceptions to § 1926.550(a)(19) in place, which allow employees to work under loads. The final rule provides as much protection as is feasible by limiting the steel erection exception to two groups of employees who are occasionally exposed to a suspended load and specifying steps that must be followed when they are exposed to overhead loads.

In the original proposal, SENRAC recommended that OSHA eliminate the requirement to have tag lines on loads because they believed the swinging lines presented a hazard to the connectors by being in the way. They contended that these lines could knock a connector off balance if left swinging freely. OSHA agreed but the final rule continues to allow for the use of tag lines where need be to control a load.

Paragraph (e) Multiple Lift Rigging Procedure

The procedure, known as ''Christmas Treeing,'' ''multiple lifting,'' or ''tandem loading,'' is not explicitly addressed in OSHA's current steel erection standard. A specific procedure for multiple lift rigging was prescribed in the proposed rule and such a procedure is included in the final rule. SENRAC believes this procedure, when executed as prescribed in this paragraph, is a safe and effective method for decreasing the number of total crane swings and employee exposure on the steel while connecting. In the past, OSHA has not looked favorably upon ''Christmas Treeing'' because, when performed incorrectly, it can present significant hazards to workers. SENRAC committee members and other interested parties demonstrated that there is a safe way of performing christmas treeing. Multiple lifting can be done safely in steel erection work if it is executed in compliance with the method prescribed in the proposed standard (Ex. 208X; p. 51). Based on the record of this rulemaking, OSHA defers to the expertise of SENRAC on this particular practice.

Paragraph (e) of the final rule applies when a steel erector chooses to lift multiple pieces of steel at one time as an alternative to hoisting individual structural members. It limits the use of this procedure to the lifting of beams and similar structural members and requires specific equipment and work practices to be used. SENRAC (Ex. 208X; p. 51) believes that Christmas treeing is already an industry practice and that the requirements of this standard will make it safer to execute.

Some commenters (Exs. 13–60 and 13–182) assert that this is not an accepted practice throughout the industry and do not agree that this is a safe practice, even with the proposal's requirements. The record does not substantiate the view that it is an unsafe practice when the specified procedures are followed. As mentioned above, the record lacks statistics on the injury and fatality rate associated with Christmas treeing. One reason for the lack of reliable statistics pertaining to Christmas treeing activities is that it is often difficult to identify the exact cause of an accident during this activity. For example, the fact that a person fell or was struck by an object during Christmas treeing activities does not mean that it was caused by Christmas treeing itself.

The record contains evidence that there are several advantages to performing multiple lifts, especially (as demonstrated by SENRAC members) when performed using the procedures specified by this paragraph (Ex 208X; p. 44) (63 FR 43465). For example, multiple lifting can be safer than individual lifting when connecting floor beams. Floor beams are relatively light and in most cases will not safely support a bundle of steel placed upon them. The normal erection procedure requires them to be stacked on the ground and delivered to the bay one by one. The multiple lifting technique allows multiple beams to be brought to a bay in one swing of the crane. They are uniform in weight and size, which makes a multiple load a lot easier to balance and handle. Multiple lifting significantly decreases the number of times that employees who are not involved in the connection process are exposed to overhead loads. It also reduces the time a connector has to spend out on the iron because the whole process is quicker.

Bill Brown of Ben Hur Construction testified that ''Christmas treeing and your stringing iron, we find to be in our operation to be a very safe, effective, and economical way of erecting generally repetitive members in building construction.'' (Ex. 205X; p. 8)

After discussing how MLRPs can reduce the number of lifts by 80%, Mr. Brown discussed the impact of this factor on his crane operators:

> Well, the operators claim that once you get them set up in the right way to do this, it's a lot easier on them.

Like I said because if they are in a boom-up swing in swing mode, that's when steel erection seems to be the most fatiguing and the most intense work for the operators, except for putting a piece in the guy's hands who's going to make the connection.

Our operators say that by doing this and having repetition of less cycles, it's a lot more less—or it's less stressful and fatiguing * * * (Ex. 205X; p. 35)

In addition, Mr. Philip Torchio of Williams Enterprises testified that ''Multiple lift rigging procedure will improve ironworker safety as well as reducing exposure of other job site crafts through increased training, inspections, improved equipment design and selection coupled with reduced lift cycles and reduced total worker exposure time'' (Ex. 208X; p. 44). Mr. Torchio went on to state that ''* * * utilizing multiple lift procedure reduces total worker exposure time, increases worker training and mental focus. It increases equipment reliability both for crane and rigging. It requires safer crane operation and reduces total job duration. All these items contribute to increased worker safety'' (Ex. 208X; pp. 45–46).

OSHA has acknowledged the potential advantages of multiple lifting in interpretation letters such as the one dated September 9, 1993, from the Director of the Office of Construction and Engineering to the Regional Administrator of OSHA Region I which read:

Christmas treeing could indeed be productive and efficient on projects when erecting floor or roof filler beams, all of the same length and weight with similar details at each end of the beams. In large industrial projects where the location of the crane is much farther away from the bay under erection, Christmas treeing could also prove to be efficient. Further, the practice reduces the total number of swings the crane makes in each project, thus reducing the risk of exposing the workers located in the vicinity of the crane or in the path of travel of the load (Ex. 9–13G; p. 2).

The different parts of paragraph (e) address six aspects of the MLRP process: lifting criteria (paragraph (e)(1)); design, capacity of equipment (paragraph (e)(2)), load limits (paragraph (e)(3)); rigging assembly (paragraph (e)(4)); setting the members (paragraph (e)(5)); and use of controlled load lowering (paragraph (e)(6)).

The first lifting criterion in paragraph (e)(1)(i) requires that a multiple lift rigging assembly (defined in the definition section) be used. By definition, the assembly must have been manufactured by a wire rope rigging supplier. Since this is a specialized type of lift, the rigging assembly must have been designed specifically for the particular use in a multiple lift and meet each aspect of the definition.

Paragraph (e)(1)(ii) of this section states that a multiple lift may not involve hoisting more than five members during the lift. Limiting the number of members hoisted is essential to safety. SENRAC determined that five members is the maximum number that can be hoisted safely. This limit takes into account the need to control both the load and the empty rigging. It also accounts for the fact that a typical bay, which consists of up to five members, can be filled with a single lift. Too many members in a lift may create a string that is too awkward to control or allow too much empty rigging to dangle loose, creating a hazard to employees.

Paragraph (e)(1)(iii) allows only beams and similar structural members (like solid web beams and certain open web steel joists) to be lifted during a multiple lift. Other items, such as bundles of decking, meet the definition of structural members but do not lend themselves to the MLRP. A typical multiple lift member would be a wide flange beam section between 10 and 30 feet long, typically weighing less than 1,800 pounds.

Paragraph (e)(1)(iv) requires that employees engaged in a multiple lift operation must be trained in these procedures in accordance with 1926.761 (c)(1), which contains specific training requirements for employees engaged in multiple lifts. Due to the specialized nature of multiple lifts and the knowledge necessary to perform them safely, this training requirement is necessary to ensure that employees are properly trained in all aspects of multiple lift procedures.

Paragraph (e)(1)(v) prohibits the use of a crane in a multiple lift if the crane manufacturer recommends that the crane not be used for that purpose. This new provision is included for clarification purposes. Crane manufacturers often recommend that employers do not execute multiple lifting with their cranes. It has been argued that there are too many variables associated with attempting Christmas treeing and any miscalculations of those component variables (such as the weights and center of gravity of the beams, crane capacity, the stability of the load under lift conditions, and inconsistent rigging techniques) could contribute to an accident. A commenter (Ex. 13–182) noted that if crane manufacturers prohibit the practice, paragraph (e), as proposed, would allow the erector to violate 1926.550(a) of the crane standard, which requires the employer to comply with the manufacturer's specifications and limitations applicable to the operation of any and all cranes and derricks.

OSHA remains consistent in requiring employers to follow the manufacturer's recommendations and specifications for its product. If the manufacturer of a crane prohibits the use of its crane in multiple lifts and an employer uses that crane to perform a multiple lift, that employer is in violation of both § 1926.550(a) and § 1926.760(e)(1)(v) which states:

No crane is permitted to be used for a multiple lift where such use is contrary to the manufacturer's instructions.

Paragraph (e)(2) requires that employers that perform multiple lifts use multiple lift rigging assembly components assembled and designed for a specified capacity. The employer must ensure that each multiple lift rigging assembly is designed and assembled with a maximum capacity for both the total assembly and for each individual attachment point. This capacity, which must be certified by the manufacturer or qualified rigger, must be based on the manufacturer's specifications and must have a 5 to 1 safety factor for all components. The rigging must be certified by the qualified rigger who assembles it or the manufacturer who provides the entire assembly to ensure that the assembly can support the whole load, and that each hook is capable of supporting the individual members. The appropriate rigging assembly to be used is the lightest one that will support the load. Typically, one assembly is manufactured and certified for the heaviest anticipated multiple lift on the job, and this rigging is then used for all the MLRPs.

To ensure that a MLRP does not overload the hoisting equipment, the Committee recommended prohibiting the total load of the MLRP from exceeding either the rated capacity of the hoisting equipment as specified in the hoisting equipment load charts, or the rated capacity of the rigging as specified in the rigging rating chart. Several crane manufacturers have recognized that MLRP is becoming an industry practice and have accepted the use of their cranes for this purpose, provided that the crane is utilized in a manner consistent with the safe practices defined in the operator's manual and crane capacity chart (Ex. 9–30). Paragraph (e)(3) reflects these provisions.

Another commenter (Ex. 13–60) felt that multiple lifting is unsafe because forces such as rigging torques and the wind tend to make the beams helicopter, increasing the chances of the steel coming out of the choker hitch.

The commenter also felt that the only justification for taking such risks is to benefit production.

SENRAC (Ex. 208X; p. 44), however, found that these conditions can be either eliminated through engineering or controlled with proper training of the employees engaged in the lift.

Several members of SENRAC stated in full committee that the use of an MLRP reduces total employee exposure to suspended load hazards as well as to the hazards associated with crane-supported loads traveling horizontally. An MLRP is treated as an engineered lift and therefore receives the full attention of the entire raising gang. The lifts are made in a more controlled fashion due to the special rigging and physical size of the assembled load. In addition, cranes used for multiple lifts must have controlled load lowering devices.

A Committee workgroup was formed (Ex. 208X; pp. 42–60) to develop the MLRP section of the proposed regulatory text. This workgroup noted several additional benefits of MLRPs. For example, the increased weight of the load hoisted using an MLRP results in reduced swing, boom, and hoist speeds, which increases the amount of control the operator has over the lift. The workgroup also stated that crane operators report that the swing operation has the greatest potential for operator error and loss of load control, and therefore reducing the number of swings enhances safety. The workgroup believed that the reduced number and speed of swing operations associated with MLRPs would increase safety, and that lift precision would also be increased because MLRPs require that controlled load lowering devices be used on cranes making such lifts. According to the workgroup (63 FR 43466), when the operator is working in the blind (where the connectors cannot be seen), reducing the number of swing cycles is particularly important because it minimizes the opportunity for a communication error, which could cause an accident. Furthermore, the workgroup stated that the total suspended load time and the frequency of loads passing overhead are reduced for all non-erection personnel on the job when an MLRP is being performed. This was considered particularly important, because these workers normally are occupied with other tasks and often do not pay attention to suspended loads that may be passing overhead. This group of employees includes those working under canopies and partially completed floor systems who cannot see hoisted material passing overhead but could be injured if a load were dropped.

In addition, when single pieces of steel are hoisted, the emphasis is often on speed. The load is often hoisted, swung and boomed at maximum crane speed in an effort to maximize production. Under these circumstances, the Committee felt that single piece hoisting increases the potential for problems in the hoist sequence and in the final placement of each member and additionally contributes to operator fatigue.

According to the workgroup (63 FR 43466), a major safety benefit of multiple lifting is that the manipulation of the members at the point of connection limits the movement of the hoist hook, in most cases, to an area less than 10 feet in diameter and additionally requires that such movement be done at a slow speed and with maximum control. The hazard that connectors consider the most serious, that of a high speed incoming beam, is thus minimized using the MLRP process.

Paragraph (e)(4) requires that the multiple lift rigging assembly be rigged with the members attached at their center of gravity and be kept reasonably level, be rigged from the top down, and have a distance of at least 7 feet (2.1 m) between the members. In practice, these procedures mean that the choker attached to the last structural member of the group to be connected is the one attached on the rigging assembly closest to the headache ball. The next-to-last member to be connected is attached to the next lower hook on the rigging assembly, and so on. As each member is attached, it is lifted approximately two feet off the ground to verify the location of the center of gravity and to allow the choker to be checked for proper connection. Adjustments to choker location are made during this trial lift procedure. The choker length is then selected to ensure that the vertical distance between the bottom flange of the higher beam and the top flange of the next lower beam is never less than 7 feet. Thus, when the connector has made the initial end connections of the lower beam and moves to the center of each beam to remove the choker, there will be sufficient clearance to prevent the connector from contacting the upper suspended beam. Furthermore, although the OSHA letter referred to earlier (Ex. 9–13G) suggested that the beam spacing could be eight or nine feet, the Committee determined, and OSHA agrees, that seven feet is more appropriate since, in addition to the necessary clearance just mentioned, a typical connector could easily reach up and grab the member at seven feet but might have some trouble doing so if the spacing were greater.

Paragraph (e)(5) requires that the members be set from the bottom up. This is the only practical way that the members can be set, and OSHA is including this requirement for clarity and completeness.

Paragraph (e)(6) requires controlled load lowering (through the use of a controlled load lowering device) to be used whenever the load is over the connectors. This means that the cranes in a multiple lift must use controlled load lowering when lowering loads into position for the connectors to set the members. The record shows that control load lowering is essential to prevent accidents that could result from the crane operator's foot slipping off the brake, brake failure, or from the load slipping through the brake. It assures that the operator has maximum control over the load. Compliance with his requirement would have prevented the July 20, 1990, fatality in Austin, Texas, referred to in Ex. 9–13G (p. 4).

A commenter (Ex. 13–340) advocated limiting MLRP required training to those involved in the MLRP and specifying levels of training that these individuals must achieve. The commenter apparently believes the word ''all'' in section 1926.753(e)(iv) means all steel erection employees on the site. The standard states:

> All employees engaged in the multiple lift have been trained in these procedures in accordance with section 1926.761(c)(1).

The standard requires that only the employees engaged in the multiple lift have to be trained in the requirements of this paragraph in accordance with § 1926.761(c)(1), not all employees affected by the lift as the comment seems to indicate.

Section 1926.754 Structural steel assembly

This section sets forth the requirements for the assembly of structural steel. Paragraph (a) requires that the structural stability be maintained at all times during the erection process. This is a general requirement for any type of steel structure, including single story, multi-story and other structures. Since structural stability is essential to the successful erection of steel structures, this section is intended to prevent collapse due to lack of stability, a major cause of fatalities in this industry. The Agency received no comments on paragraph (a) and it is unchanged from the proposed rule. Additional requirements that specifically apply to

multi-story structures are provided in paragraph (b) of this section.

Paragraph (b)(1) requires that permanent floors be installed as the erection of structural members progresses and that there be not more than eight stories between the erection floor and the upper-most permanent floor, except where the structural integrity is maintained as a result of the design. This paragraph is identical to both the proposed rule and the existing § 1926.750(a)(1) in OSHA's previous steel erection standard.

Paragraph (b)(2) prohibits having more than four floors or 48 feet (14.6 m), whichever is less, of unfinished bolting or welding above the foundation or uppermost permanently secured floor, except where the structural integrity is maintained as a result of the design. This paragraph is the same as proposed and essentially the same as existing § 1926.750(a)(2), except for the addition pertaining to situations where structural integrity is maintained as a result of the design. The Committee recommended an exception similar to that in paragraph (b)(1) to allow for flexibility in design, and this recommendation is reflected in the final rule.

Paragraph (b)(3) requires that a fully planked or decked floor or nets be maintained within 2 stories or 30 feet (9.1 m), whichever is less, directly under any erection work being performed. This is essentially the same provision as existing § 1926.750(b)(2)(i), except for the option of installing nets in addition to the planked or decked floor options. This provision serves many purposes: limits falls of employees to 30 feet, provides falling object protection, and can be used as a staging area for emergency rescue. Paragraph (b) thus retains many of the requirements of OSHA's existing steel erection rule. No comments were received and paragraph (b) is promulgated as proposed.

Paragraph (c) of the final rule sets forth requirements that address slipping/tripping hazards encountered when working on steel structures. SENRAC pointed out that the tripping hazards posed by shear connectors (a type of attachment) on working surfaces need to be addressed in the revision of subpart R. Shear connectors are commonly found in bridges and in other types of steel structures. As explained in the preamble to the proposed rule, the Committee found that when attachments, like shear connectors, are shop-welded to the top flange of beams, the resulting projections can create a significant tripping hazard. Field installation of these attachments can significantly reduce exposure to this hazard. It is much safer to walk on a beam that is not studded with these shear connectors or otherwise covered with a temporary working surface. It also found that this would increase the productivity of employees who walk on the top flange of the structural steel because they can walk less hesitantly. Shear connectors are addressed in paragraph (c)(1) of the final rule.

Paragraph (c)(1)(i) prohibits the attachment of shear connectors (such as headed steel studs, steel bars or steel lugs), reinforcing bars, deformed anchors or threaded studs to the top flanges of beams, joists or beam attachments so that they project vertically from or horizontally across the top flange of the member until after the decking, or other walking/working surface, has been installed. Additionally, paragraph (c)(1)(ii) requires that when shear connectors are used in the construction of composite floor, roofs and bridge decks, the laying out and installation of the shear connectors shall be done after the decking has been installed, using the deck as a working platform. This paragraph also prohibits the installation of shear connectors from within a controlled decking zone (CDZ), as specified in § 1926.760(c)(8).

Many comments were received in response to the proposed paragraph (c)(1). Those opposed to the proposal shared several concerns: technical problems with field welding caused by outdoor atmospheric conditions, increased exposure to fall hazards, back injuries from field-installation of the connectors, an increased risk of falling objects, and additional costs with field installation. A wide variety of components are commonly welded in the field (such as the K, LH and DLH series steel joists addressed in § 1926.757(b), discussed below). Most of the steel beams/girders available on the market can be field welded. Preheating of steel flanges is generally not required for either shop or field installation. In addition, some commenters indicated that there are companies that already routinely field-weld shear connectors (Exs. 202X; p. 29, 44, 87; 205X; p. 359). While one commenter described extra steps that are needed for field-welding (Ex. 201X; p. 45), another commenter found that productivity was higher for field-installation (Ex. 208X; p. 166). The record does not show that atmospheric conditions or other technical obstacles pose any greater difficulties for welding shear connectors in the field than for welding other components, or that welding them in the field presents significant technical obstacles.

The claim that field-installation of shear connectors will increase the likelihood of falls (Exs. 13–176; 13–180; 13–210) is based on the assumption that workers installing shear connectors will have greater exposure to fall hazards. The provisions of this standard, however, will protect these workers. For example, § 1926.754(c)(i) prohibits the installation of the connectors until the metal decking (or other walking/working surface) has been installed. Once the decking has been installed, under § 1926.760(a)(2), perimeter safety cables must be installed. Therefore, those installing the shear connectors will have a safe walking/working surface to work from, and will be protected from the exterior fall hazard by the perimeter safety cable. Furthermore, SENRAC, as well as several commenters (Exs. 202X; p. 29, 44, 87; 203X; p. 185; 205X; pp. 166, 359), were of the view that field installation is safer then factory installation. The concern about an increased risk of back injuries has not been substantiated. In addition, the provision is designed to address the greater problem of fatal falls, which can occur if a worker trips on a shear connector.

While field-installation of shear connectors will increase the number of objects and tools aloft, and thus increase the potential for falling objects, the requirements in § 1926.759 are designed to protect against that type of risk in this and other contexts.

There were also objections raised on the grounds that compliance with paragraph (c)(1) may not always be possible in bridge construction (Exs. 13–113; 13–170G; 13–210). Specifically, a commenter stated that, in bridge construction, ''installation of shear connectors from a deck may not always be possible.'' It appears that these commenters are asserting that, in bridge construction, there may be instances where compliance with some or all of the provisions is not feasible. Because the extent and types of circumstances where this would be the case are not well defined, the Agency believes that it would be inappropriate to provide an exception for bridge work. Nor does the record clearly indicate that paragraph (c)(1) would not be feasible for bridge construction. An employer may raise these problems as an affirmative defense in individual situations.

In sum, the record shows that the use of shop installed shear connectors poses a significant safety hazard, and that the use of field-installed connectors is a feasible means of reducing that hazard. Shop-welded shear connectors result in projections on top flanges of beams/

girders that create a tripping hazard to the workers engaged in steel erection. The record supports the contention that it is safer to install the shear connectors after the decking has been installed, so that the deck can be used more safely as a working platform. Using the deck as a work platform, combined with the presence of perimeter safety cables, effectively eliminates the fall hazards associated with field installation of shear connectors. The record does not show that there are significant technical or other obstacles to field-installation. Accordingly, the provision is promulgated as proposed with only minor wording changes.

Final rule paragraph (c)(2) ''slip resistance of metal decking'' is reserved. OSHA is reserving paragraph (c)(2) to allow additional time to study the slippery surface aspects of metal decking and identify appropriate rules to reduce the risk factor from those conditions. A coalition of steel-producing and steel-related organizations (the Steel Coalition) continues to gather data and prepare recommendations to a SENRAC workgroup on slippery surfaces with respect to paragraph (c)(2). The Steel Coalition intends to identify the principal factors contributing to slip and fall injuries resulting from slippery metal decking, and devise feasible and effective approaches to reduce those risks (Ex. 9–151). Once SENRAC reviews this information and makes recommendations, the Agency will determine what actions will be taken in this area.

Paragraph (c)(3) will reduce the risk of steel erection workers slipping on coated steel members installed three years after the effective date of this standard. At that time, it will prohibit employees from walking on the top surface of any structural steel member that has been coated with paint or similar material, unless the coating has achieved a minimum average slip-resistance of 0.50 when wet on an English XL tribometer, or the equivalent measurement on another device. This paragraph does not require that the particular coated member be tested. Rather, it requires the test to be done on a sample of the paint formulation produced by the paint manufacturer. The testing laboratory must use an acceptable ASTM method and an English XL tribometer or equivalent tester must be used on a wetted surface and the laboratory must be capable of employing this method. The test results must be available at the site and to the steel erector. Appendix B lists two appropriate ASTM standard test methods that may be used to comply with the paragraph. If other ASTM methods are approved, they too are allowed under this provision.

The final paragraph differs from the proposal in two significant respects. Proposed paragraph (c)(3) would have prohibited employees from walking on the top surface of any structural steel member with a finish coat that decreased the coefficient of friction (CoF) from that of the uncoated steel. The final text sets a specific slip-resistance for the coated surface, when tested wet. In addition, proposed paragraph (c)(3) stated that the paragraph applied to coated steel installed at the effective date of the standard, rather than, as in the final, three years later.

The Hazard

Based on SENRAC's discussions, and the rulemaking record, OSHA finds that working on steel surfaces coated with paint or other protective coatings presents slip and fall hazards to employees and that this standard must reduce this hazard using feasible means. SENRAC described the hazards as the use of paint or coatings on steel for structures exposed to highly corrosive materials (such as those used in mills and chemical plants) or exposed to varying weather conditions (such as stadiums). In the proposal, OSHA set out SENRAC's concerns as follows:

> The Committee found that a major cause of falls in the steel erection industry is the presence of slippery walking, working and climbing surfaces in steel erection operations when fall protection is not used. The problem initially arises from the application of protective coatings on structural steel used, for example in the construction of mills, chemical plants and other structures exposed to highly corrosive materials as well as in the construction of stadiums or other structures exposed to varying weather conditions. It is usually impractical to leave the steel uncoated and then to paint the entire structure in the field after erection. Unfortunately, steel coated with paints or protective coatings can be extremely slippery. When there is moisture, snow, or ice on coated steel, the hazard is increased * * * (63 FR 43467).

As discussed below regarding § 1926.760, accident data in this record demonstrate that falls from elevations of 30 feet or less resulted in many ironworker injuries and fatalities. In addition, the Agency recognizes that slips on the same level also lead to many injuries. We believe that provisions to reduce the slip potential of surfaces walked on by steel erection workers are clearly needed. OSHA and SENRAC examined the factors involved in slippery surfaces and determined that the most effective and feasible approach is to increase slip resistance and allow employees to walk on only those coated surfaces which meet a threshold for acceptable slip resistance. Much of the discussion in this rulemaking involves issues regarding which slip-resistant threshold to set; whether it is feasible to measure it; and whether compliance with such a provision is technically and economially feasible.

Commenters affirmed the existence of a serious hazard from coated surfaces; many asserted that slick or slippery paint is very dangerous (Exs. 13–49, 13–66, 13–95, 13–345, 13–348, and 13–355B). Most of these commenters (Ex.13–66 and a group of 124 ironworkers in Ex. 13–355B) added that slippery paint is the worst condition they run into on structural steel, and they asked that the paint be made safe. Other ironworkers (Ex. 13–355B) asserted that epoxy paint was hazardous to erectors. All together, 230 of these ironworkers commented in support of a provision to make painted steel less slippery. A comment from a structural steel fabricator (Ex. 13–228) stated that they agreed that ''painted [steel], moist or wet, is slipperier.''

In contrast to the comments asserting that coated surfaces present a slipping hazard, a comment from an engineer for a state government agency (Ex. 13–359) stated that slippery surfaces were attributable to a variety of causes, such as weather conditions, which can reduce traction on coated or uncoated surfaces (Ex. 13–359). He added that there was no basis for the requirements that addressed a CoF in subpart R ''since there are no accepted methods for determining friction at the job site and tests would not be relevant to site conditions.'' In addition, the American Iron and Steel Institute Steel Coalition submitted a consultant's report asserting that it is not really necessary to know a CoF in evaluating pedestrian traction, and that it is important to rate the traction under various relevant conditions (Ex. 13–307A, pp. 24–25).

In response to the first concern that slippery surfaces are attributable to a variety of causes, OSHA points out that requiring less slippery coatings in no way suggests that employers should ignore other unsafe conditions. The general construction standard for training § 1926.21 requires employers to ''instruct each employee in the recognition and avoidance of unsafe conditions * * *'' This includes slipping hazards due to factors such as moisture from weather conditions and unsafe footwear. OSHA agrees however, with its expert witnesses, William English, David Underwood and Keith Vidal, who stated in their report, that

''contaminants'' (including rain water, condensation and ice) and shoe bottom construction are important factors, but are not as easily controlled as surface coatings (Ex. 17, p. 2). Also, the rule will require wet testing, thus accounting for most weather-related slip hazards.

In response to the second concern that it is not really necessary to know a CoF in evaluating traction, the final rule text does not set a required CoF—the 0.50 measurement is a slip resistance measurement for the walking surface. While related to CoF (a ratio of forces), the 0.50 referred to in the final rule is a measurement on a tester that is designed to mimic (to some extent) the dynamic forces involved in walking on a surface. While different types of shoe material (and different amounts of wear) affect the amount of traction experienced by the worker, the record shows that it is not feasible to establish a requirement that would account for all the factors that relate to the CoF. Nor would it be feasible to measure slip resistance at the site under the numerous and ever-changing ''relevant conditions.'' The English reports and testimony of English, Underwood and Vidal (as discussed below) shows that setting a requirement for the walking surface (when wet) will improve traction.

A commenter suggested that OSHA focus on ironworkers' footwear rather than specifying a slip resistance for the paint (Ex. 13–307A, pp. 2–5). The Agency finds that this type of approach would not work as a substitute for addressing the slip resistance of the paint because ironworkers' footwear typically become contaminated with mud, gravel, and other substances that would alter the slip resistance characteristics of the sole material (Exs. 203X, p. 213 and 204X, p. 292).

Other commenters recommended that only uncoated surfaces be allowed to be erected (Exs. 13–41, 13–138 through 13–142, 13–234, and 13–341). The record does not demonstrate that uncoated steel is necessary for employee safety since surface coatings can provide equivalent or greater protection against falls. Also, SJI identified several significant problems with requiring the steel to be uncoated when erected. Among these would be increased costs associated with painting the steel in the field after it was erected, which it estimated would amount to $450 to $800 million, and a slowing of the construction process by two to four weeks (Ex. 204X; p.17).

Use of the Term ''Finish Coat'

The final rule specifies the acceptable slip resistance of structural steel ''coated with paint or similar material,'' whereas the proposal limited the provision to steel which had been ''finish-coated''. This change clarifies that the provision applies to the surface of the coated structural steel when the steel is erected. OSHA believes that the rulemaking record demonstrates that the hazard posed by slippery coated steel is present irrespective of whether the coat is part of a multi-coat system. In addition, we note that both the English I study (Ex. 9–64) commissioned by SENRAC and the English II study (Ex. 17) commissioned by OSHA, which tested slippery coated surfaces, evaluated coatings that were not necessarily ''finish'' coats. According to Paul Guevin, an OSHA expert witness, the English II study looked at three types of slip-resistant primers: Alkyd paints without additives; zinc-rich primers, and alkyds or other resin-based primers with polyolefin (Ex. 18, p. 2). The modification to ''coating'' also responds to concerns that it would be difficult to determine which paints are ''finish'' coats. Thus, the reworded provision now clearly applies to steel members coated with standard shop primers where the shop primer is the uppermost coat when the steel is erected.

A number of commenters asked OSHA to clarify and/or define the term ''finish coat'' (Exs. 13–182, 13–209, 13–228, 13–363, and 13–367). One of these commenters (Ex. 13–182) opined that finish-coated means painting after erection, which they indicated was done in many situations. A fabricator (Ex. 13–228) commented that a finish coat is the final coat of a multi-coat paint system, whether it was applied in the shop or the field is immaterial. Another commenter (Ex. 13–367, p. 16) noted that ''it is frequently not possible to determine if an applied coating is a single coat or a multi-coat system''. The American Institute of Steel Construction (AISC) speculated (Ex. 13–209, pp. 31–32) that SENRAC's use of ''finish-coat'' was an attempt to address certain epoxies and polyurethanes, which are typically the second and third coats found in multi-coat paint systems, but that ''[t]he scope of the proposed rule could be twisted to apply to all paints, not merely that small segment of the market that may present a problem.'' OSHA disagrees with this characterization of the provision's intended application. By deleting the term ''finish coat,'' OSHA clarifies that the provision applies to coated steel on which employees must walk, regardless of whether the coating will remain the last coat of paint after the steel erection is over, and regardless of the chemical composition of the coating.

Benchmark Slip-Resistance Criterion

The final standard requires that coated steel must score at a minimum average slip resistance of 0.50 as measured on an English XL tribometer or equivalent reading on another tester. Proposed § 1926.754(c)(3) would have required that the structural steel surface be no more slippery than bare, uncoated steel. OSHA stated in the proposal that SENRAC, after reviewing various industry presentations, ''concluded that it could not determine a minimum value for slip-resistance or CoF, given all the variables to be considered, nor could it agree on an acceptable testing method'' (63 FR 43468).

After reviewing the entire record, OSHA has determined that it is necessary to set a specific slip-resistance value for coated steel. No other regulatory approach to reducing the risk of slipping is as appropriate. The record supports using the English XL value of 0.50 (or the equivalent) as the cutoff for acceptable coated steel surfaces on which employees may walk. The record demonstrates that acceptable testing methods will be available when the provision goes into effect.

The English II report noted that a level of 0.50 was reasonably safe and has been recognized for many years:

> The non-controversial 0.50 threshold of safety that has been recognized in the safety engineering literature and case law for 50 years would provide a vast enhancement of footwear traction that would produce a significant improvement in the safety of ironworkers working at high elevations. (Ex. 17, p.12)

In post-hearing comments (Ex. 64), Mr. Guevin explained that when the Federal Trade Commission published a proposed rule for floor polishes in 1953 it determined a minimum of 0.50 when measured on a James machine to be a safe value (Ex. 64, pp.3–4). In his testimony at the hearing (Ex. 200X; p.120), Dr. Underwood added that he understood that 0.50 came from rounding up a CoF of 0.35 to give a small margin of safety for walking slowly in a normal way. He indicated that the CoF of 0.35 came from determining a ratio of an average hip height of 3 feet (0.91m) and a common distance of 2 feet (0.61m) per step taken in a normal stride.

The English II study indicates that the recommendation of 0.50 on the English XL scale was based on the previously established benchmark of 0.50 CoF (Ex. 17, p.12). We find that the information and testimony from the rulemaking record show that 0.50 on the English XL

scale is an appropriate minimum value to designate slip-resistant surfaces when measured under wet conditions using the ASTM methods referenced in Appendix B to this subpart.

As noted above, OSHA is changing the proposed benchmark for acceptable slip-resistance, from bare steel, to a specific slip resistance value for the coated steel. Thus, there is no need for employers, paint companies or fabricators to measure the slip resistance of bare steel for purposes of complying with this standard. Some participants objected to using the slip-resistance of bare steel as the benchmark. OSHA believes that the revised provision addresses these concerns. A comment from a builder's association (Ex. 13–121) stated that ''it is next to impossible to provide CoF equal to original steel after coating it.'' The Steel Coalition wrote that the proposal's reference to a test for a comparative coefficient of friction in § 1926.754(c)(3) would not be practical or meaningful, and that coatings with a high slip-resistance score would be considered unacceptable when compared to original steel with a higher score (Ex. 13–307, pp. 35–36). The American Institute of Steel Construction (AISC) (Ex. 13–209, p. 36) stated that ''[t]he benchmark of bare steel is ambiguous.'' AISC explained that using bare, uncoated steel as a benchmark was problematic because it was impossible to find a single uniform steel surface with which to make comparisons—''there is no such thing as a uniform piece of bare steel'' (*Ibid,* p. 30). The AISC also objected on the grounds that each piece of steel would have to be tested, before and after it was coated (*Ibid,* p. 30).

The Society for Protective Coatings (SSPC) (Ex. 13–367, p 16) stated that ''* * * data from the English study [English I study] shows that a pristine millscale steel surface received one of the poorest ratings by ironworkers and by the English machine. Therefore, it is extremely risky to make an assumption about slip resistance based on whether the steel is coated or uncoated.''

During the hearing, Mr. English testified that he did not support the benchmark of original or bare steel:

> First of all, * * * pristine bare steel is pretty rare. Secondly, * * * the baseline would be variable. Thirdly, we find that pristine bare steel, it's slippery * * * And as a practical matter, it rarely occurs as a problem at erection sites (Ex. 200X; pp.115, 128–129).

Some comments supported using bare steel as the benchmark of acceptable slip-resistance. Journeymen ironworkers (54 individuals, Ex.13–207C) signed statements saying that they backed limiting coatings to the equivalent of bare steel. However they did not provide information concerning the feasibility or adequacy of relying on ''bare steel'.

In sum, the record supports OSHA's decision that bare steel is not an appropriate benchmark. We agree with the commenters who stated that there is considerable variability in bare steel surfaces due to both manufacturing specifications and extent of oxidation, that variability would also pose substantial problems in implementing the requirement, and that some bare steel is unacceptably slippery.

Test Methods

The final rule requires that beginning three years after the effective date of the rest of the standard, employees may not walk on coated steel unless the coating has been tested and found to meet the threshold 0.50 using an appropriate ASTM test method. Appendix B specifies two methods now approved by ASTM. The record shows that these methods are sufficiently accurate and yield sufficiently reproducible results for use in testing coatings to determine their compliance with the specified 0.50 measurement.

Evidence in the record shows that testing using the VIT (English XL) according to ASTM F1679–96 will provide reproducible and accurate results of the slip-resistance of coated steel: the authors of the English II study stated that the VIT has achieved satisfactory precision and bias according to ASTM E691–92 Standard Practice for Conducting an Interlaboratory Study to Determine the Precision of a Test Method. The report of their testing showed that highly consistent results were produced from repeating the VIT tests, and that there was substantial correlation between the ironworker rankings with VIT rankings.

Also, the final rule's designation of approved ASTM testing methods as appropriate to determine compliance with a performance criterion is consistent with other OSHA standards. For example, in OSHA's standard for nationally recognized testing laboratories, an ''ASTM test standard used for evaluation of products or materials'' falls under the term ''appropriate test standard'' (as set out in the introductory text to paragraph (c) of that section, § 1910.7).

Various participants, however, claimed that the two ASTM testing methods lack precision and bias statements, which in their view render those standards ''meaningless'' (see *e.g.* Dr. Kyed's testimony Ex. 204X; p. 262 and Ex. 13–367; pp. 3–4). However, various witnesses (including one who offered the position above) stated that precision and bias statements often lagged behind a new approval by ASTM of a test method. ''Test methods can be temporarily issued without these statements, but they must eventually comply with this requirement. Generally, it's a 5-year period.'' (Ex. 204X; p.262). Dr. Mary McKnight from the National Institute for Standards and Technology (NIST), testifying with a panel from the Society for Protective Coating (SSPC) [formerly the Steel Structures Painting Council], agreed that ''* * within 5 years, there will be a group of laboratories that become proficient in running the test method and who will participate in a round-robin study. At the end of this process, ASTM includes a number describing statistical significance of different responses, with a 95-percent repeatability limit and/or confidence level'' (Ex. 205X; pp. 56–68). In post-hearing comments (Ex. 71, p. 4), Mr. English stated that the ASTM F1679 precision and bias study has been approved by letter ballot, and at a recent meeting of the F13.10 Traction subcommittee, two-thirds of those present voted to find all negatives non-persuasive.

OSHA concludes that the rulemaking record demonstrates that the methods identified in Appendix B are sufficiently reliable in evaluating the slip-resistance of coated steel. The record also shows that this reliability is likely to be confirmed by the ASTM precision and bias statement process within the 5-year period this provision will be delayed.

In post-hearing comments, the major industry groups who objected to OSHA's designating ASTM methods stated that ''several of their organizations actively participate in research and development efforts involving the validation and adoption of a testing machine and test methodology appropriate to coated structural steel'' and recommended that OSHA delay the effective date for 3 years to allow further expert evaluation (Exs. 63, p. 7 and 75, p. 4). These groups also wanted this additional time to determine if implementation of the provision was feasible.

Although the ASTM methods are the best available, OSHA acknowledges that the ASTM methods lack a protocol for representative samples of steel and their preparation. The Agency anticipates that either these parallel issues will be addressed by ASTM within the time frame before paragraph (c)(3) becomes final (5 years after the effective date of the final rule) or alternative steps can be

taken to ensure accounting for these parameters.

Availability of Paints to Meet the Slip-resistance Benchmark

The final standard delays the effective date of the slip-resistant coating provision for 5 years from the date the rest of the standard becomes effective. This is a change from the proposal, which would not have delayed the effective date. OSHA finds that although some slip-resistant coatings suitable for use in the steel erection industry are now available, widespread distribution and use of suitable coatings will take additional time. We have chosen a 5-year delay in agreement with the post-hearing requests of the major organizations commenting on this issue. These organizations submitted their comments as the Unified Steel Construction Consensus Group (USCCG) (Ex. 63), a group that consists of eight large organizations as signatories. The USCCG explained that their membership represents design, engineering, fabrication, manufacturing, and field installation components of the steel construction industry. (The following organizations were listed as signatories: The Steel Joist Institute; Steel Erectors Association of America; National Council of Structural Engineers Associations; National Institute of Steel Detailing; Council of American Structural Engineers; American Institute of Steel Construction; Metal Building Manufacturers Association; and the Society for Protective Coatings). They stated that the rulemaking record was uncertain about the extent adequate coatings were now available, and that developing, testing and distributing appropriate slip-resistant coatings for the industry would take time. Also, during the rulemaking, many paint formulators and steel fabricators stated that they do not now use the specific paints tested in the English II study. (For example, see Ronner at Ex. 204X, pp. 15 and 108–109; and Appleman at Ex. 205X, pp. 139 and 157–158.) In addition, some formulators and fabricators and their representatives stated that there is a lack of information about whether the paints/coatings in use can meet the standard's slip-resistant threshold. (For example, see Ex. 13–367, pp. 7 and 17; Ex. 13–307, pp. 38–39; Ex. 13–209, pp. 36–37; and Ex. 206X, pp. 34–35.)

OSHA finds that there is some uncertainty as to the extent to which there are adequately slip-resistant coatings currently available that would meet the industry's needs. In view of the fact that there are many such coatings presently on the market (see Ex. 17, pp. 3 and 10–11; Ex. 18, pp. 1–2; Ex. 200X, pp. 54, 62–63, 70, 137–139, and 168–169; Ex. 204X, pp.193–194; Ex. 205X, pp. 139 and 157–158) and the technology for developing additional coatings is in place (see Ex. 205X, pp. 51, 93–94, 99–102, 139, 151–152, 157–158, 167–168 and 217–219; Ex. 63, pp. 3 and 7; and Ex. 64, pp. 2–3), it is reasonable to expect that the 5-year delay will provide enough time for the industry to develop coatings that comply with the final rule.

OSHA agrees that the record evidence on the availability of slip resistant paint which meets the standard is conflicting. The witnesses who conducted the English I study commissioned by SENRAC (Ex. 9–64), and the English II study commissioned by OSHA (Ex. 17), testified that one reason for conducting these studies was to determine whether slip-resistant paint was widely available for use by the steel erection industry. They contended that slip resistant paints are available. They surveyed fabricators first, to identify coatings actually in use for steel erection, tested these coatings in their studies, and found that most of them passed the tests for slip-resistance (Ex.18, pp. 1–2). In post-hearing comments (Ex. 71, p. 4), Mr. English stated that ''paints now being applied on something over 80 percent of the fabricated steel products in the U.S. can be easily made to comply with the proposed specification with no complications to application methodology, coatability, corrosion or UV resistance or any of the ''problems'' raised by * * * those opposed to this standard.'' He added that the paints that do not already comply could be brought into compliance with ''the simple addition of the plastic powder * * *'' Another witness (Ex. 205X; pp. 220–221) acknowledged that zinc-rich primers that are currently being used ''extensively'' had good slip-resistant qualities. However, he also stated that they are not generally used by the industry (*Ibid;* pp. 139 and 157–158).

Various other rulemaking participants told OSHA that the coatings used in the English studies represented only a small percentage of coatings used in steel erection. According to a telephone survey of 180 fabricators conducted by Mr. Ronner for the Steel Joist Institute (SJI) (Ex. 28), only 14 (7 percent) used the paints tested in the English II study (Ex. 204X; p. 15), and that although slip-resistant coatings are now used for various military applications such as helicopter flight decks and aircraft carriers, they are not generally used by the steel erection industry (Ex. 205X, pp. 139 and 157–158). The SSPC commented that slip-resistance has not been a design factor for coatings used on structural steel and that slip-resistant paints have not generally been tested for durability (Ex. 13–367, p. 7). A representative of the SJI (Ex. 204X, p. 13) testified that the zinc-rich primers, paint with polyolefin beads and some alkyd-based primers used in the English II study are for spray applications only, are not recommended for dip operations. He added that steel joists typically are coated by dipping them in dip tanks (Ex. 204X; p. 13), and that the industry could not spray on paints due to state and Federal environmental restrictions. These commenters assert that there is no basis for assuming that the same slip resistance would be achieved if the paints were dipped, and that there are technical problems with applying some of the slip resistant paints by dipping (See for example Mr. Ronner's testimony, Ex. 204X; p.13, and Mr. Appleman's testimony at Ex.205X; p. 93). Both Mr. Guevin and Mr. English acknowledged that they do not know if the same slip results reported in the English II study for the paints with beads would be obtained if that paint had been applied by dipping (Ex. 200X; pp. 62–63).

Promising approaches to providing slip-resistant coatings for the steel erection industry were identified during the rulemaking. As explained in the English II study (Ex. 17, p. 11) and as Mr. Guevin (Ex. 200X, p. 56) stated by ICI Devoe in Western Canada developed a slip-resistant 3-coat system, using ''DevBeads,'' an additive of polyolefin beads. However, various participants questioned whether grit particles such as polyolefin beads could be added to paints and primers in steel erection. For example, George Widas (OSHA expert witness who peer reviewed the English II study) questioned whether such coatings would retain their corrosion protection (Ex. 204X; p. 240); Mr. Sunderman of KTA Tator, Inc., questioned whether polyolefins would be degraded by ultraviolet light (Ex. 206X, p. 34–35). Mr. Sunderman also challenged the notion that specific properties of paint can be modified ''randomly'' without affecting the balance of properties, and without extensive testing and evaluation (Id, p. 35–36).

Several participants stated such that slip resistant coatings could be developed for use in steel erection , but that time would be needed to do this. Robert Kogler, a research engineer, explained that testing corrosion control materials takes several years, and they still rely very heavily on long-term exposure data, but are coming up with accelerated testing that gives us

reasonable data (Ex. 205X; p. 74, to same effect, see testimony of Dr. Appleman Ex. 205X; p. 51).

On a related issue OSHA finds that obtaining documentation or certification that coated steel meets this requirement also is feasible. However, paint manufacturers told OSHA in their post-hearing comments that they will work with interested parties to formulate, test and evaluate coatings to meet the standard's criteria (See Exs. 63, p. 7 and 75, p. 4 and 205X, p. 218). Mr. Guevin testified that based on his experience with contacting paint manufacturers to obtain slip-resistant coating for the English II study, and his knowledge of typical paint technical bulletins issued by manufacturers setting out specifications, tests conducted, and results, companies would readily certify if their coatings meet OSHA slip-index requirements in accordance with the recognized ASTM Method (Ex. 200X; p. 168). Thus, OSHA does not agree with a project manager for a steel fabricator (Ex. 13–300) who commented that the requirement was ''not viable'' because paint manufacturers will not provide documentation out of concerns for liability.

In sum, OSHA finds that although there are slip resistant coatings in use for structural steel in limited specialized applications, most of them have not been adequately tested to determine whether they comply with the standard and meet the performance needs of other kinds of structures. The coatings industry has committed to develop, test and distribute coatings that comply with this standard in a reasonable time frame. OSHA believes that the hazard of slipping on coated steel is significant; that the paint and fabrication industries feasibly can produce and use coated steel that complies with this provision within the time frame stated in the regulatory text; and in any event, there are now coatings on the market that meet the standard that can be used to some extent even before the widespread production of new slip-resistant coatings. The need for this provision is amply supported in the record. We believe that by issuing a delay of the effective date of this provision the needs of the industries affected by this provision will be met and the long-term safety concerns of the workers who must walk on these surfaces will also be met.

Paragraph (d) Plumbing-up

Paragraph (d)(1) requires that, when deemed necessary by a competent person, plumbing-up equipment shall be installed in conjunction with the steel erection process to ensure the stability of the structure. The proposed rule contained the requirement that ''connections of the equipment used in plumbing-up shall be properly secured.'' In the preamble to the proposed rule, OSHA requested public comments on whether the final rule should contain an additional requirement that ''plumbing-up equipment shall be installed in conjunction with the steel erection process to ensure the stability of the structure.'' This request for public comment was based on concerns that SENRAC members raised regarding whether or not the plumbing-up provisions are specific enough to ensure structural stability at all times during the erection process.

The Agency adopts the provision as stated in the final rule, based upon consultations with SENRAC members. To avoid the implication that plumbing-up equipment is always installed during steel erection, OSHA had added the phrase ''when deemed necessary by a competent person'' to the beginning of paragraph (d)(1). Consistent with this change, OSHA introduces final rule paragraph (d)(2) with the phrase ''when used''.

The Structural Engineers Association of Illinois (Ex. 13–308) requested that the following requirement be added: ''Plumbing-up equipment shall be in place and properly installed before the structure is loaded with construction material such as loads of joists, bundles of decking or bundles of bridging.'' The commenter stated that loading the structure before it is plumbed can change the true lines of beams and columns, altering the final alignment of the members. The Agency agrees that this clarifies the intent of the requirement to ensure that connections of the equipment used in plumbing-up shall be properly secured, and has modified the provisions by adding paragraph (d)(2) as proposed by the commenter and several SENRAC members (63 FR 43484).

Paragraph (d)(3) (proposed paragraph (d)(2)) requires the approval of a competent person before plumbing-up equipment is removed. This paragraph is slightly different from OSHA's current standard, which provided that, ''Plumbing-up guys shall be removed only under the supervision of a competent person.'' In the final rule, which is identical to the proposed rule, ''guys'' has been changed to ''equipment.'' This is necessary because ''guys'' implies guy lines only, while plumbing equipment also includes stabilizer bars and solid web members. Additionally, the term ''under the supervision'' has been changed to ''with the approval'' of a competent person for greater regulatory clarity. In addition, with respect to open web steel joists, the stabilizer plate requirement of § 1926.757(a)(1)(i) will greatly facilitate the plumbing-up of structures.

There were no comments received regarding paragraph (d). The Agency adopts the changes as proposed.

Paragraph (e) Metal Decking

This paragraph of the final standard addresses specific requirements to protect employees during the installation of metal decking. As stated in the preamble to the proposed rule, the requirements in § 1926.754(e) address many of the hazards which cause decking accidents.

One commenter (Ex. 13–312) asserted that it is difficult to apply rules designed for steel frame erection and floor decks in high rise buildings to metal roofing, and suggested that OSHA address metal roofing in a separate section. However, there is insufficient information in the record for this Agency to develop a separate provision.

In the proposal, the terms ''decking'' and ''floor decking'' were used. In order to clarify that § 1926.754(e)(1) through (e)(5) applies to all activities associated with the use of metal decking used as a support element in a floor or roof system, the terms decking and floor decking have been changed to metal decking. Metal decking as defined in § 1926.751 means a commercially manufactured, structural grade, cold rolled metal panel formed into a series of parallel ribs; for this subpart, this includes metal floor and roof decks, standing seam metal roofs, other metal roof systems and other products such as bar gratings, checker plate, expanded metal panels, and similar products. After installation and proper fastening, these decking materials serve a combination of functions including, but not limited to: a structural element designed in combination with the rest of the structure to resist, distribute and transfer loads, stiffen the structure and provide a diaphragm action; a walking/working surface; a form for concrete slabs; a support for roofing systems; and a finished floor or roof.

The National Riggers and Erectors commented (Ex. 13–314) that, as a group of steel erectors and installers of metal decking, they agree with the proposed requirements to protect employees during decking activities because decking installation is one of the most hazardous operations for an ironworker and orientation, training, and good laws are key to ensuring employee safety.

The Bridge, Structural, Ornamental and Reinforcing Ironworkers submitted

a written comment (Ex. 13–198) in support of the decking requirements and expressed their opinion that over time, accident statistics will support the proposed changes.

Paragraph (e)(1) of the final rule addresses some of the common hazards associated with hoisting, landing and placing of deck bundles. Many of the requirements of this paragraph are adapted from the *Steel Deck Institute Manual of Construction With Steel Deck* (Ex. 9–34A).

Paragraph (e)(1)(i) of the final rule requires employers to ensure that the packaging and strapping on the deck bundle are specifically designed for hoisting purposes. Bundle straps usually are applied at the factory and are intended to keep the bundle together until it is placed for erection and the sheets are ready to be spread. Decking is bundled differently; some manufacturers design the strapping to be used as a lifting device. However, hoisting a bundle by straps that are not designed for lifting is extremely dangerous. The bundle straps can break apart or loosen, creating a falling object hazard or, if a structural member is hit by the bundle or its contents, it could cause the structure to collapse (63 FR 43468). OSHA believes that compliance with this requirement will prevent these hazards. There were no comments received regarding this requirement.

Paragraph (e)(1)(ii) requires employers to secure loose items such as dunnage, flashing, or other materials placed on the top of deck bundles before a bundle is hoisted. Sometimes, to expedite unloading and hoisting, items such as dunnage or flashing are placed on the decking bundle to save time. Dunnage, for example, will be sent up with the bundle to help support it on the structure and to protect the decking which has already been installed. Id. This requirement will not allow hoisting loose items or ''piggy backing'' unless the items are secured to prevent them from falling off the bundle in the event that it catches on the structure and tilts. There were no comments regarding this requirement.

Paragraph (e)(1)(iii) requires employers to land bundles of decking on joists in accordance with § 1926.757(e)(4), which sets out the six conditions that must be met by employers before a bundle of decking is placed on steel joists where all bridging has not been installed and anchored. First, a qualified person must determine, and document in the site-specific erection plan, that the structure or portion of the structure is capable of supporting the load. The bundle of decking must be placed on a minimum of three steel joists and the joists supporting the bundle must be attached at both ends. At least one row of bridging must be installed and anchored and the edge of the bundle must be placed within one foot of the bearing surface of the joist end. The total weight of the bundle of decking may not exceed 4,000 pounds. SDI commented that a portion of the preamble to the final rule misrepresented the position of SDI in the sentence, ''The Steel Deck Institute (SDI) has indicated that, in the future, manufacturers will deliver decking in bundles that will accommodate this load limit'' (Ex. 203X; p. 99–101). Also, SDI suggested adding the following requirement: ''When an erection plan requires any maximum weight, this information must be provided to the deck manufacturer along with any other bundling instructions, i.e. provide approval labels or special marking instructions' (Ex. 13–356). SDI also stated that this must be done with sufficient lead time to allow production coordination between the erector and the manufacturer.

OSHA believes it is unrealistic to require buyers to give sufficient lead time to manufacturers. The 4,000 pound weight limit for decking bundles applies only if the employer has determined that all six conditions can be met prior to landing a bundle of decking on steel joists where all bridging has not been installed and anchored. At this time, the employer may negotiate with the manufacturer to restrict a specific bundle weight to 4,000 pounds, or the employer may also opt to install and anchor all bridging in order to continue with the erection process without delay.

Paragraph (e)(1)(iv) requires employers to land bundles on framing members in such a manner that the decking can be unbanded without losing the support of the structure. If the blocking were to move while the bundle is being unbanded, the bundle would need to have enough support to prevent it from tilting and falling.

One commenter requested adding, ''When cutting bundle straps or breaking down crates, care must be taken to prevent straps or dunnage from falling on personnel or equipment'' (Ex. 13–356). OSHA agrees that unbanding decking bundles poses hazards from falling objects and § 1926.759(b) addresses this issue. That section prohibits work below on-going steel erection activities unless overhead protection is provided.

OSHA considers hazards associated with cutting banding straps to be widely recognized throughout construction and general industries. In addition to falling straps and dunnage, cutting banding straps poses serious hazards to eyes as well as cuts, abrasions, as well as bruises, strains or other injuries while attempting to hold or secure the contents of the bundle. Training in the establishment, access, proper installation techniques and work practices required by § 1926.754(e) would be covered by § 1926.21(b)(2), OSHA's general training requirements for construction work. In addition, special training programs in § 1926.761(c) [which supplements § 1926.21] specifically address employees who work in a controlled decking zone. All recognized hazards, including those associated with cutting banding straps, would be part of the work practices training to ensure that employees recognize unsafe conditions in the work environment and know the measures to control or eliminate hazards.

Paragraph (e)(1)(v) requires employers to secure decking against displacement after the end of the shift or when environmental or job site conditions warrant. Decking may become dislodged from the structure or bundle because of conditions such as high winds. Wind can also move a sheet of loose decking and create a hazard where an employee inadvertently steps onto a sheet of loose piece of decking, believing it to be secured.

Paragraph (e)(2) Roof and Floor Holes and Openings.

This paragraph sets requirements for installing metal decking to minimize the risks of falling through holes and openings in decking.

There are differences between the use of the terms ''holes'' and ''openings'' in subpart M and subpart R. Subpart M uses the term ''hole'' to describe all holes and openings in floors, roofs and other walking surfaces and uses the term ''opening'' to apply only to holes and openings in walls. However, SENRAC used these terms differently in the proposed steel erection standard, incorporating the terms as they are commonly used by steel erection employers and employees (see the definition of ''decking hole'' for a more detailed discussion). For instance, in steel erection, the term ''hole'' means a small gap or void that presents a tripping hazard or a falling object hazard, while ''opening'' means a gap or void that is large enough for an employee to fall through.

OSHA made changes in the proposed regulatory text to clarify that § 1926.754(e)(2) applies to the installation of all metal decking supporting either a floor or roof system. The terms ''decking'' and ''floor

decking'' have been changed to read ''metal decking''.

Paragraph (e)(2)(i) requires employers to ensure that all framed metal deck openings have structural members turned down to allow continuous deck installation, except in cases where structural design constraints and constructibility do not allow this. Requiring framed deck openings to be turned down allows continuous decking to be performed without having to cut the deck around the opening. This procedure would apply to smaller openings rather than larger openings, such as elevator or mechanical shaft openings. Whereas smaller openings may be cut at a later time, it may not be appropriate to delay larger openings.

A group of fifty-four ironworkers commented and specifically agreed with the requirement that framed deck openings be turned down in order to allow continuous decking (Ex. 13–207C).

Paragraph (e)(2)(ii) requires roof and floor openings to be decked over. Where large size, configuration or other structural design does not allow for covering of the roof and floor holes and openings, they must be protected in accordance with § 1926.760(a)(1).

The committee intended the proposed standard to require continuous decking except in certain cases where continuous decking is not feasible due to structural design. For example, large openings such as elevator shafts and stairways, are typically too large to cover, and would usually be protected with a guardrail. The standard has been reworded to clearly reflect this intention.

Paragraph (e)(2)(iii) requires employers to delay cutting decking holes and openings until immediately before they are permanently filled with the equipment or structure needed or intended to fulfill their specific use. That equipment or structure must either meet the strength requirements of paragraph (e)(3) of this section, or be immediately covered. This has been revised from the proposed rule for clarity and in response to a commenter who requested a clear and concise definition of ''essential to the construction process'' in order to eliminate the many possible interpretations (Ex. 13–222).

Two commenters indicated that paragraphs (e)(2)(ii) and (iii) can be interpreted to require continuous decking over all holes which are cut out later and that this requirement would be a cost issue as well as a safety issue because covering large openings with decking may require temporary supports to sustain anticipated working loads on the deck (Exs. 201X; p.76 and 201X; p.11). We note, however, as discussed above, that paragraph (e)(2)(ii) specifically states that large openings do not have to be decked over if the employer protects employees using guardrails or other fall protection pursuant to § 1926.760 (a)(1).

Fifty-nine comments were received which expressed agreement with the proposed decking requirements (Exs. 13–207C; 13–345; 208X, pp.136–139; 203X, p.108–161; 13–198; and 13–347). One commenter indicated that his company does not allow any hole to be cut in any raised level unless the person using the hole is there, ready to cover or protect it (Ex.13–198). Fifty-four commenters agreed with delaying the cutting of deck holes and the requirement to immediately cover or protect the deck openings (Ex. 13–207C). Another 195 letters were received in support of ''covering and marking of deck holes and openings (Ex. 13–355B). One commenter added that there is no good reason to not deck over and clearly mark roofing holes (Ex. 13–355B). A commenter suggested that barricades be used to protect floor openings (Ex. 13–355B). One commenter stated that ''Covering and marking holes in the deck with strong material and painting with high visibility paint will prevent a lot of injuries.'' (Ex. 13–355B). Another commenter strongly urged that all holes and openings on the work floor be covered with plank, screens or nets and that all sheets of decking around columns should be cut into their proper place, and welded down (Ex. 13–355B).

Delaying the cutting of holes in decking was established to prevent the employee and objects from falling through the holes and eliminate tripping hazards that may be presented by covers over holes that would not be used for some time. The holes are typically smaller than those addressed in paragraph (e)(2)(i) of this section. OSHA has revised the standard to clarify these points and address the issues raised in the comments.

Paragraph (e)(3) Covering roof and floor openings.

Final rule paragraph (e)(3) addresses proper coverings required by § 1926.754(e)(2)(iii), which will protect employees from falling into or through openings in roofs and floors. These provisions have been moved in the final from proposed § 1926.760(d).

Paragraph (e)(3)(i) requires that covers be strong enough to withstand the weight of employees, equipment and materials by requiring that covers support twice that combined weight.

Proposed provision § 1926.760(d)(1) stated that covers must support the greater of (1) 30 pounds per square foot (psf) for roofs and 50 psf for floors, or (2) twice the combined weight of the employees, equipment and materials that may be on the cover. The final rule, § 1926.754(e)(3)(i), deletes the specific strength requirement of 30 psf for roofs and 50 psf for floors. These figures were based on strength requirements specified in the Steel Deck Institute's Manual of Construction with Steel Deck (Ex. 9–34A).

Mr. Philip Hodge from HABCO Inc. (Ex. 13–153), stated that some buildings designed for snow loads may not meet the 30 psf requirement and that the temporary cover, in some instances, may be stronger than the remainder of the roof if this section remained. In subpart M, in § 1926.502 (i), the Agency instituted a requirement that covers support twice the combined weight of employees, equipment and materials, rather than specifying a particular minimum psf. We believe that the subpart M approach is also appropriate here. Because the proposed provision would require unnecessarily strong covers for roof and floor openings, the provision has been modified to accord with subpart M.

Paragraphs (e)(3)(ii) and (e)(3)(iii) are unchanged from the proposal, except for being re-numbered. Paragraph (e)(3)(ii) requires that all covers be secured when installed so as to prevent accidental displacement by the wind, equipment or employees. This provision eliminates a fall hazard. Paragraph (e)(3)(iii) requires that all covers be painted with high visibility paint or be marked with the word ''HOLE'' or ''COVER'' to warn of the hazard and to prevent an employee from inadvertently removing the cover. These provisions are consistent with the requirements in subpart M.

Paragraph (e)(3)(iv) addresses the hazards associated with smoke domes and skylight fixtures. Installed smoke domes and skylight fixtures are not to be considered covers for the purposes of this section unless the strength requirement of paragraph (e)(3)(i) is met. If these structures are not capable of supporting the load, they may give way, causing a fall. Unless they have adequate strength, these structures cannot be relied upon to protect employees from falls. Employees commonly lean or sit on skylights or smoke domes and these structures need to be capable of supporting the load without failure.

Paragraph(e)(4) Decking gaps around columns.

Final § 1926.754(e)(4) (proposed paragraph § 1926.754(e)(3)) requires that wire mesh, exterior plywood, or equivalent be installed around columns where planks or metal decking do not fit tightly thus leaving a gap. The materials used must be of sufficient strength to provide fall protection for personnel and prevent objects from falling through.

Proposed paragraph (e)(3) used the term ''space.'' Three commenters explained that the proposed standard did not identify what a space is and how big a space must be (Exs. 201X, p.76; 13–173 and 13–31). One of the three commenters added that the standard should require that the material used to cover these gaps must be strong enough to prevent people and objects from falling through (Ex. 201X; p.76).

OSHA agrees that the term ''space'' is not defined and that this could lead to misinterpretations. The proposed regulatory text did not discuss the strength of the materials to be used, the only reference to the strength is in the preamble to the proposed standard which explains that gauge metal, typically cut out to the profile of the column, is commonly used for this purpose and would be considered an equivalent material.

OSHA has revised the standard to clarify the issues addressed in the comments by changing the title to ''Decking gaps around columns'' and adding strength and fit requirements to the final rule.

Paragraph (e)(5) Installation of metal decking.

Paragraph (e)(5) of the final rule (proposed paragraph (e)(4)) requires metal decking to be laid tightly and immediately secured upon adjustment to prevent accidental movement or displacement, except as provided in § 1926.760(c). Section 1926.760(c) provides for a ''Controlled Decking Zone'' (CDZ) which allows up to 3,000 square feet of decking to be unsecured until adjustment when safety attachment is then required (see discussion on ''safety deck attachment'' in § 1926.760(c)).

There were three comments received in support of the requirement to secure decking immediately after it is laid and aligned (Exs. 13–198; 13–356 and 202X, pp. 129–130). A representative of the Bridge, Structural, Ornamental and Reinforcing Ironworkers (Ex. 13–198) commented that bays of unfastened sheets are unnecessary. SDI (Ex. 13–356) agreed that all decking, whether single or multi-span, should be fastened immediately after alignment and should not be used as a working platform until properly attached. A witness (Ex. 202X, pp. 129–130) testified that stepping on, or leaving a deck sheet unsecured should be prohibited because of the following: (1) Decking can separate due to ice, snow, water, oils, or combinations of these that cause side laps to uncouple easily, (2) loose decking has an aerodynamic effect and in some winds it can fly, resulting in injuries and property damage, and (3) there are situations where the supports are not level resulting in a sag in the decking that increases the chance that two sheets could unmarry.

OSHA agrees with the requirement that all metal decking must be laid tightly and secured, once it has been aligned and adjusted, to prevent accidental movement or displacement. This may be accomplished by installing final deck attachments or safety deck attachments such as tack welding the panel, or with a mechanical attachment, such as self-drilling screws or pneumatic fasteners. In order to be consistent with the rest of Subpart R, we have revised the final rule by changing the terms ''decking,'' ''metal deck,'' ''deck,'' and ''floor decking'' to ''metal decking.'' This was done to clarify that § 1926.754(e)(5) applies to all metal decking used as a support element for either a floor or roof system. Also, the proposed requirement in the CDZ provision (proposed § 1926.760(c)(5)) that during initial placement, metal decking panels must be placed to ensure full support by structural members, has been moved to final rule paragraph § 1926.754(e)(5)(ii). This was determined to be more of an erection procedure than fall protection. Paragraph (e) of § 1926.754 (Structural steel assembly) now encompasses all of the procedures for the installation of all metal decking, whether in a CDZ or not.

Paragraph (e)(6) Derrick Floors.

Paragraph (e)(6) of the final rule (proposed paragraph (e)(5)), addresses the use of derrick floors during erection. Paragraph (e)(6)(i) requires that a derrick floor be fully decked and/or planked and the steel member connections be completed to ensure that the floor will support the intended load.

Paragraph (e)(6)(ii) requires that temporary loads on a derrick floor be distributed over the underlying support members in order to prevent spot overloading. These provisions contain essentially the same requirements as those in existing § 1926.750(b). There were no comments received regarding these provisions and they remain, in final, unchanged from the proposed rule.

Section 1926.755 Column Anchorage

This section addresses the hazards associated with column stability and, specifically, the proper use of anchor rods (anchor bolts) to ensure column stability. Section 1926.755 of the final rule specifies the criteria for column anchorage. Inadequate anchor rod (anchor bolt) installation has been identified both by SENRAC and by witnesses at the public hearing as a contributing factor to structural collapses. One participant, a connector by trade, addressed a SENRAC meeting and asserted that collapses due to poor footings and anchor bolts are currently the primary cause of connector accidents (Ex. 6–3, p. 4). This section sets out requirements for ensuring that columns are adequately stabilized during their erection to withstand construction loads.

Paragraph (a) General requirements for erection stability

The final rule differs from the proposal in several areas. First, the title of the section has been changed from ''Anchor bolts'' to ''Column anchorage''. Two commenters suggested changing the section title, the Safety Advisory Committee of the Structural, Ornamental, Rigging and Reinforcing Steel Industry (SAC) (Ex. 55) and the Unified Steel Consensus Group (USCCG) (Ex. 63). The SAC Committee suggested ''Erection Stability'' while the USCCG recommended changing the title to ''Column Anchorage''. Since the section contains several means of achieving column stability in addition to the anchor bolt requirements, the Agency believes ''column anchorage'' better describes the subject of the section.

Paragraph (a)(1) of the final rule requires that all columns be anchored by a minimum of 4 anchor rods/bolts. In addition, paragraph (a)(2) requires that each column anchor rod/bolt assembly, including the column-to-base plate weld and the column foundation, be designed to resist a minimum eccentric gravity load of 300 pounds (136.2 kg) located 18 inches (.46m) from the extreme outer face of the column in each direction at the top of the column shaft. These provisions are similar to those in proposed paragraph (a)(1) with minor changes that clarify the type and location of the eccentric load. The proposed paragraph (a)(1) has been split into two paragraphs in the final rule because there are two distinct requirements.

Several commenters objected on the grounds that this section imposes design requirements for the structure. In their

view, it is inappropriate for OSHA to set such requirements. In particular, Korte Construction Company (Ex. 13–170F) asserted that while having four anchor bolts is a good practice, the general contractor/construction manager cannot guarantee that the engineers and designers will design the building to OSHA's specifications. Additionally, they indicated that the engineers and designers specify by contract that the means and methods of construction are the contractor's responsibility. Another commenter, Summit Construction Group (Ex. 13–200) questioned whether engineers and designers will follow the regulations in the design of the structure since the engineers and designers are not identified as being required to follow Subpart R. Engineers and designers design structures for compliance only with building codes and other related industry standards to assure public safety after completion of the structure. KEUKA Construction Corporation (Ex. 13–154) opposes the idea that OSHA can, by regulation, determine how many column anchor bolts are necessary regardless of what the design architect or engineer may require. They also state that it is inappropriate for OSHA to ''micro-manage'' steel erection.

OSHA, however, strongly believes that it is as appropriate for the Agency to require that avoidable safety hazards be engineered out for the protection of those erecting the building as it is for local jurisdictions to set design criteria for the safety of the building's occupants. The report of the SENRAC statistical workgroup (Ex. 9–42 and 9–49) shows that connector fatalities are 17% of the total fatalities involving falls from heights. In addition, during SENRAC meetings, ironworker connectors identified insufficient anchor bolts as the primary cause of connector accidents (Ex. 6–3, p. 4). The record establishes that there is a hazard of columns collapsing due to anchor rod/bolt problems and this requirement is necessary to reduce the fatalities and injuries caused by inadequate anchor bolt assemblies.

An overwhelming majority of commenters agreed that 4 anchor rods/bolts should be required. According to testimony from Robert Murman of E–M–E, Inc. (Ex. 202X; pp. 83–85), ''* * * a four-bolt system is a lot safer, it's a lot easier to plumb.'' Mr. Murman went on to describe the differences between using two anchor bolts and using four, stating that:

> * * * a four-bolt system, you've got four corners holding it down. Two bolts, you've got only half of it and the other side is rocking. A lot of times you're using shims, you're shim packing, trying to get these things to plumb. The more shims you put under there, the less stability you're going to have and the greater chance of pulling the anchor bolt out or breaking an anchor bolt, shearing them off, or it could snap. If it's not placed properly, then you have to chemically or epoxy it in, and you have a chance of pulling the after-bolt out, which is only like a pencil. An anchor bolt, traditionally, is on a 90 [a 90° angle], or it's built so that it's in the concrete and holding under the footing. So when you're plumbing a column that's on a shim pack, sometimes you're loosening the nut.

Upon questioning, Mr. Murman further stated:

> When the column is going in, 90 percent of the time we set a column without a person—they'd have the guy on the ground with the impact wrench and he's going to tighten up. It's set with the crane and they cut him loose and let the choker slide down the column, and 95 percent of the time he's not up on that column, unless you have a problem with the choker not coming down, or he has to get the ladder to get up on top of your beam to connect the column and the beam together. That's when you have your greater exposure.

In describing the loads imposed on the column during erection, Mr. Murman added, ''a 200 or 250 pound person up on that ladder is really putting some stress on that [the column]. As long as you've got two anchor bolts, you've got the potential there of having it going into the hole.'' Also, Mr. Mike Cushing, testifying as part of the Ironworker panel (Ex. 205X; p. 337), when questioned whether he thought four anchor bolts on every column will make a safer situation than we have today, stated:

> I don't think I've ever seen a column go over that had four anchor bolts in it that didn't have an installation problem with the bolts * * * [h]owever, two anchor-bolt columns, I can think of about a dozen that I've seen go over. And they don't go the way the two bolts are. They go to the left or the right of the bolts, you wouldn't have that situation [with the proposed language].''

In addressing paragraph (a)(1) of the proposed rule, several commenters suggested that the standard allow for exceptions to the 4 anchor rod/bolt for posts and small columns and where four anchor rods/bolts are otherwise not feasible or necessary. The American Institute of Steel Construction (AISC) (Ex. 13–209) commented that ''[t]he provision for four anchor bolts is appropriate for large columns, but not necessarily needed for smaller posts used for stair platforms, architectural features, wall framing, mechanical support platforms, mezzanines and similar structures.'' In addition, Mr. Jim Larson (Ex. 203X; pp.16–17) testified:

> * * * [t]he requirements for four anchor bolts in all major columns is endorsed by [Steel Erectors Association of America] SEAA for additional stability according to the ironworker when they are exposed to the initial phase of erecting steel. There may be specific limited applications in which four anchor rods (anchor bolts) are not feasible on minor columns and/or secondary posts.''

Following up, Mr. Eddie Williams (Ex. 203X; pp. 24–25) stated that a small column sitting on an eight inch wall could have two anchor bolts and be stronger than four if there is not enough concrete to get coverage on the four anchor bolts. LeMessurier Consultants (Ex. 13–127) commented that ''* * * there are cases where a 4-anchor rod pattern is neither practical nor feasible, such as a column base bearing on a narrow wall, at the edge of a pit, or at some corners. For such cases, the standard should allow the structural design engineer the design flexibility of using 2 or 3 anchor rods to safely resist the 300 pound load applied at the 18-inch prescribed eccentricity.'' Another commenter (Ex. 13–151) shared the same view that ''* * * there are certain foundation considerations which prohibit an effective 4 anchor rod pattern. Typical of these are column bases on narrow walls, near the edges of pits, and at corners.'' Another commenter (Ex. 13–153) commented that the requirement as proposed ''* * * would reduce the use of steel columns embedded in masonry walls. This would encourage the construction of free-standing CMU [concrete masonry unit] walls supporting steel roofs, which is generally recognized as not as safe a construction method as a complete steel framed structure with CMU in-fill.'' The National Council of Structural Engineers Associations (Ex. 13–308) stated ''[i]n some cases, 4 anchor bolts may not provide any more stability for the column than 2 anchor bolts. The proposed rule needs to differentiate between main load bearing columns and posts.'' In addition, Basic Metal Products, Inc. (Ex. 13–245) commented that the four anchor bolt minimum is proper for main columns, but should not be required for miscellaneous ''post columns'' such as those supporting stairs, wind posts, etc.

Similarly, The Council of American Structural Engineers (Ex. 13–320) recommended that OSHA either clarify its intent as to the scope of this provision, or define ''column'' to exclude small posts, roof mounted machinery platforms and other supports which are not subject to being climbed by an ironworker during installation. The American Institute of Steel Construction (Ex. 13–209) suggested

distinguishing between columns, which clearly require the safety of four or more anchor bolts and posts, which would not.

The proposed four anchor bolt requirement appeared to cover all columns, without exception. Neither SENRAC nor OSHA intended this requirement to apply to all vertical members. Some vertical members (also called posts), are typically smaller, do not support the main structure, and are not climbed by a connector. For these reasons, such vertical members do not require the anchorage described in this paragraph. These structural members are either attached at both ends or are hung from above (such as wind posts). In contrast, a column attached at its base functions as a freestanding cantilever during some period of time in the construction process and is climbed by the connector.

The Agency agrees with the commenters that some flexibility should be provided for in the standard for these situations. The final rule, therefore, defines ''column'' to exclude posts. The Agency feels that this definition adequately addresses the feasibility concerns expressed in the record. The definitions, in the final rule, of column and post read as follows:

> Column means a load-carrying vertical member that is part of the primary skeletal framing system. Columns do not include posts.
>
> Post means a structural member with a longitudinal axis that is essentially vertical, that: (1) is axially loaded (a load presses down on the top end) and weighs 300 pounds or less, or (2) is not axially loaded, but is laterally restrained by the above member. Posts typically support stair landings, wall framing, mezzanines and other substructures.

Therefore, in the final rule, the ''Column Anchorage'' section only applies to columns and does not apply to posts. The record does not support the need to add additional exceptions. OSHA believes that the changes in the definitions are sufficient to address the concerns expressed by the commenters.

Proposed paragraph (a)(1) also stated that, ''each column anchor bolt assembly, including the welding of the column to the base plate, shall be designed to resist a 300 pound (136.2 kg) eccentric load located 18 inches (0.46 m) from the column face in each direction at the top of the column shaft.'' One commenter (Ex. 13–127) suggested that ''[t]he standard must clarify how the 18 inch eccentricity is measured along the weak axis of a typical H-shaped column. For these, the 18 inches probably should be measured from the edges of the column flanges.'' Another commenter (Ex. 13–151) suggested that when calculating the moment to be applied at the column base in the weak axis direction, OSHA needs to define whether ''face'' of a column means face of the column web or edges of the column flanges. For clarity, final paragraph (a)(2) specifies that the eccentricity is measured from the extreme outer face of the column at the top of the column shaft.

In addition, the final rule revises the term ''eccentric load'' to read ''eccentric gravity load'' to clarify the design criteria for columns. This issue was addressed by a commenter (Ex. 13–207) who felt ''horizontal load'' would better describe all of the forces imposed on the column including pulling and prying by the ironworker along with any wind factor. Mr. Doug Rutledge (Ex. 207X; pp. 116–118) testified that describing the load as a horizontal load more closely characterizes the nature of the forces. After evaluating all the characteristics of the forces applied to the column during erection, the Agency determined that ''eccentric gravity'' is a better term to describe those forces. In addition, ''and the column foundation'' has been added to clarify that the anchor bolt assembly must be designed such that the foundation (as well as the column-to-base plate weld) can resist the forces applied.

Another change is the introduction of the term ''anchor rod'' wherever the term ''anchor bolts'' was used in the proposal. Two commenters stated that the term ''anchor rod'' is the industry term that is commonly used and would be consistent with the current AISC design specifications. LeMessurier Consultants (Ex. 13–127) suggested changing the term ''anchor bolts'' to ''anchor rods'' in the standard. They stated that the AISC and the Steel Industry now refer to the anchors at column bases as anchor rods. The Structural Steel Fabricators of New England, Inc. (Ex. 13–228) commented that since not all anchorages of steel column base plates to foundations fall under the definition of ''bolts'', the industry has changed the terminology to ''anchor rods''. They recommended the new term ''anchor rods'' be substituted through the standard.

The term ''anchor bolt (anchor rod)'' has been inserted in the final rule wherever the term anchor bolt was used in the proposed rule. Since the term has just recently been changed in the industry, the Agency has elected to keep both terms in the standard for purposes of clarity.

Paragraph (a)(3) of the final rule requires that columns be set on level finished floors, pre-grouted leveling plates, leveling nuts, or shim packs which are adequate to transfer the construction loads. This provision is identical to proposed § 1926.755(a)(2). No comments were received on this paragraph.

Final rule paragraph (a)(4) requires that all columns be evaluated by a competent person to determine whether guying or bracing is needed and, if needed, be installed. This is changed from proposed paragraph (a)(3) which limited the required evaluations to ''unstable columns.'' Several commenters noted that the proposed provision was too vague because of its reliance on the term ''unstable columns.'' Others criticized it on the grounds that all columns should be guyed or braced. At the hearing, upon questioning, Mr. Jim Larson (Ex. 203X; p. 41) stated ''[i]n and of itself, * * *, the anchor bolt, four anchor bolts or two anchor bolts, I do not believe were intended to be the only method of stability''. Gibble, Norden, Champion (Ex. 13–70) commented that ''[a]ll columns must be stabilized by guy cables and to imply that a column can be safely stabilized by anchor rods will lull erectors into ignoring proper guying, resulting in an unsafe condition.''

Since the condition of a column is not known until it is evaluated, all columns need to be evaluated in order to determine whether any of them are unstable and need to be guyed or braced. Therefore, the final rule paragraph (a)(4) (proposed paragraph (a)(3)) requires that all columns be evaluated by a competent person and be guyed or braced where necessary. The Agency feels that anchor bolts alone cannot be assumed to be capable of achieving the necessary stability, and that all columns need to be evaluated and guyed or braced to resist the normal effects of wind on the partially completed structure. In support of this, Mr. Doug Rutledge (Ex. 207X; pp. 63–64) testified:

> [p]rovision should be made for allowing design innovation and improvement while still meeting the necessary performance criteria. Furthermore, I believe the standard must recognize the impossibility in some instances and the economic impracticability in other instances of achieving column stability in all instances. Such columns, I believe, should be identified by the designer of the structures, thereby signaling the erector or responsible individual that these columns require special attention. They require temporary bracing. They require guying. They require some means other than the ordinary standard of simply erecting the column and assuming the column will be self-stable.

In summary, paragraphs (a)(1) through (a)(4) requires that all columns must be secured with 4 anchor rods (anchor bolts) and evaluated by a competent person to determine whether guying or bracing is needed. In addition, posts will be excluded from the 4 anchor rod/bolt requirement by definition.

Paragraph (b) Repair, Replacement or Field Modification of Anchor Rods (Anchor Bolts)

This paragraph addresses the situation where the steel erector encounters an anchor bolt that has been repaired, replaced or modified. The steel erector often cannot visually tell when an anchor bolt has been repaired and thus will not be aware of the repair unless notified that a repair has been made. If an anchor bolt has been improperly repaired, replaced or modified, it could lead to a collapse. The intent of this paragraph is to ensure that the erector has the opportunity to make sure that any work on anchor bolts has been adequately performed.

The title of this paragraph has been changed by adding ''of anchor rods (anchor bolts)'' to clarify that this section deals with the repair, replacement and field modification of anchor rods/bolts.

Paragraph (b)(1) of the final rule prohibits the repair, replacement or field modification of anchor rods (anchor bolts) without the approval of the project structural engineer of record. Commenters supported this requirement, and it is unchanged from the provision in the proposal. Emile Troup of The National Council of Structural Engineers Association (Exs. 13–308 and 52) commented that most structural engineers would agree that repairs or necessary modifications to structural steel components should be designed or reviewed by the Structural Engineer of Record (SER). However, he also stated, that the safety or stability of the structure during construction, is the direct responsibility of the steel erector and its' ironworkers, and should not be transferred to the SER as a result of repairs or modifications. The Structural Steel Fabricators of New England (Ex. 13–228) commented that they ''* * * agree with the standard in requiring the project structural engineer of record to approve repair, modification or replacement of anchor rods.'' The Structural Engineers Association of Illinois (Ex. 13–294) agreed that modification, repair or alteration of any component should require approval from the project structural engineer of record. They went on to state that the rule ''* * * should clarify that the project structural engineer of record is not responsible to ensure that the conditions requiring modification, repair or alteration are identified * * *''

Paragraph (b)(2) of the proposed rule would have required that the Structural Engineer of Record (SER) determine whether guying or bracing is necessary if an anchor bolt was repaired, replaced or modified. This provision has not been included in the final rule. Commenters asserted that it was not within the SER's expertise to determine when guying or bracing is necessary for repaired, replaced or modified anchor rods (anchor bolts). One commenter (Ex. 13–294) stated that ''[t]he project structural engineer of record is not familiar enough with erection procedures, and is not trained to assess the stability of any column or post for interim construction loads that may or may not require temporary bracing.'' Furthermore, ''[a] competent person should make this determination based on the notification required by paragraph (b)(3) [of the proposal].''

OSHA is persuaded by this comment. Under § 1926.755(a)(4), all columns need to be evaluated by a competent person to determine whether guys or braces are necessary, including those instances where anchor rods have been repaired or replaced. The repair or replacement of anchor rods/bolts needs to be approved by the SER, but the SER should not be the one to determine whether guying or bracing of the column and frame is necessary.

Paragraph (b)(2) of the final rule (proposed paragraph (b)(3)) requires that prior to the erection of a column, the controlling contractor must provide written notification to the steel erector if there has been any repair, replacement, or modification of the anchor bolts for that column. This requirement, working in conjunction with § 1926.752(a)(2), completes a crucial communication loop. The steel erector generally does not have contact with the project structural engineer of record. The steel erector cannot rely on the controlling contractor at present to convey the approval of the project structural engineer of record for repair, replacement or modification of anchor bolts because it is not required.

OSHA received comments that fell into three categories: (1) Controlling contractors should notify the steel erector of modifications and repairs to anchor bolts (Ex. 208X, p. 77); (2) contractors that make the repairs or modification should contact the steel erector (Exs. 13–173, 13–210, 13–215, 13–222, 13–334); and (3) the steel erector should find out if repairs or modifications have been made (Exs. 201X, P. 77; 13–13–173; 13–210; 13–215; 13–222; 13–334).

OSHA agrees with the commenters who supported requiring controlling contractors to notify the steel erector of modifications and repairs; that is what the final rule requires. On the second point, OSHA notes that a problem with relying solely on the contractor or individual that makes the repair to notify the steel erector is that the steel erector may not be on site at the time of the repair. Therefore, the controlling contractor is in the best position to obtain and relay this type of information.

With regard to the comments stating that the steel erection contractors should be responsible for finding out if repairs or modifications have been made, OSHA believes that if a steel erector notices that modifications have been made, the steel erector will contact the controlling contractor as a result of this provision. The purpose of this provision is to address the fact that it is often difficult, if not impossible, for the steel erector to tell if a repair or modification has been made. This provision is designed to ensure that the erector is made aware of such changes.

Section 1926.756 Beams and Columns

Section 1926.756 sets forth requirements for connections of beams and columns to minimize the hazard of structural collapse during the early stages of the steel erection process. Recognizing that inappropriate or inadequate connections of beams and columns is hazardous and can lead to collapses and worker fatalities, OSHA, in this section, establishes performance and specification requirements to address these hazards.

Paragraph (a) General

Paragraph (a) requires that during the final placing of solid web structural members, the load must not be released from the hoisting line until the members are secured with at least two bolts per connection, of the same size and strength as shown in the construction documents. The members must be drawn up snug tight or secured by an equivalent connection as specified by the project structural engineer of record. While reflecting § 1926.751(a) of OSHA's current steel erection standard, the proposal added the alternative provision, ''or the equivalent as specified by the project structural engineer of record''. This phrase was added to allow for alternative types of connections approved by the SER, such as welding or, in the case of heavier members, the use of more than two bolts.

In addition, the final rule allows only bolts of the same strength and size as shown in the erection drawings to be used in securing the member until the final connections can be made. This will prevent collapses caused by the use of lesser strength/size bolts.

This paragraph, as set out in the proposal, did not contain the reference to cantilevered members. While no commenters directly opposed the paragraph as proposed, one commenter (Ex. 206X; p. 55) asked OSHA to address cantilevered connections. OSHA agrees that cantilevered connections need to be addressed as they may require more than two bolts due to the different load angles placed upon them while executing a double connection. Therefore, a new paragraph (a)(2) has been added requiring a competent person to determine if more than two bolts are necessary to ensure the stability of cantilevered members, and that additional bolts be installed if necessary.

Paragraph (b) Diagonal Bracing

Paragraph (b) requires that solid web structural members used as diagonal bracing be secured by at least one bolt per connection drawn snug tight or secured by an equivalent connection as specified by the project structural engineer of record. In many cases, solid web structural members, such as channels or beams, are used as diagonal bracing or wind bracing. When used for this purpose, a one-bolt connection is sufficient. These members play a different role in erection stability than members used for other purposes since these members are designed to provide stability for the final completed structure and are not used as walking/working surfaces. Compliance with this provision will provide safe connections for these members. No comments were received addressing this paragraph and the final rule is issued as proposed.

Paragraph (c) Double Connections

A double connection is a type of attachment in which the ends of two steel members join to opposite sides of a central (carrying) member—such as a beam, girder or column web—using the same bolts. The erection process is as follows: the first member is bolted to a beam, girder or column web. Later, a second member is added to the opposite side of the existing connection. This second member is attached using the same bolts (going through the same holes) that are being used to attach the first member. To attach the second member, the nuts on the first beam's bolts have to be removed and the bolts backed most of the way out; the ends of the bolts have to be flush with the surface of the central member so that the second member can be lined up with the existing holes. Only fractions of an inch of the ends of the bolts are now preventing the first beam from falling. Once the holes in the connection plate of the second member are lined up with the first beam's bolts, the bolts are pushed back through all the holes and the nuts are put back on the bolts and tightened to secure the three pieces of steel together.

This maneuver is extremely dangerous. The process often takes place with a worker sitting on the first beam. If the first beam collapses, the worker falls. The risk of collapse is high because of the tenuous grip of the loosened bolts and the possibility that the connector's spud wrench, which is used to align the second (incoming) member, may slip. If at any time the carrying member (the central member to which the first and second members are being attached) reacts to residual stresses developed through welding and/or misaligned connections at lower elevations, the carrying member can move suddenly, causing the bolts or the spud wrench to become dislodged. The second (incoming) member can also cause problems if it bumps up against the fitting or wrench end. Additionally, crane operators, wind, structural movements and the connector straining to make a tough connection impose stresses that can lead to disengagement of the connection.

The current steel erection standard does not address this hazard. SENRAC believed that double connections are essential in some steel erection designs (63 FR 43471). SENRAC's analysis of NIOSH and BLS fatality statistics (Exs. 9–14, 9–39, and 9–42) indicated that structural collapses constitute a significant cause of steel erection deaths. SENRAC also concluded that failed double connections are a major cause of structural collapses. One commenter (Ex. 207X; p. 111) believed that the ''engineering community'' could accommodate a standard that prohibited employee exposure to double connections with a few exceptions. While the record indicates that designers can engineer structures with minimal use of double connections, it does not appear to be necessary to prohibit double connections since there are means available to perform double connections safely.

Testimony on behalf of SEAA (Ex. 203X; p. 77) that attachments such as seats are already being used in the field to eliminate the double connection hazard strongly supports the view that this is a feasible means of making these connections safe. OSHA believes that the severity of the consequences of a failed double connection warrant these provisions.

The Ironworkers International Union (Ex. 208X; p. 120) commented that the hazard associated with double connections is not a design problem that should be prohibited but is a safety issue and should be addressed in the standard like other things, such as stairs, that employees use on a regular basis. Huber, Hunt, and Nichols (Ex. 201X; p. 216) emphasized the frequent exposure of connectors to the hazards of double connections and that it has become something that the individual employee has to deal with in everyday connecting They assert that when a double connection is not properly executed, the resulting failure can lead to the immediate collapse of the entire structure, endangering the connector and every other worker on or around the structure.

A commenter (Ex. 207X; pp. 57–165) suggested that double connections be identified on the erection drawings so that erector recognizes where there will be difficult connections in advance and can assure that the appropriate devices are present to eliminate the hazard. OSHA believes that double connections are already commonly indicated on erection drawings.

Paragraph (c)(1) requires that when making a double connection, the first member must remain connected to a supporting member by at least one connection bolt at all times unless a connection seat (see definition) or equivalent connection device is supplied with the members to secure the first member and prevent the column from being displaced. This requirements is the same as proposed. At a minimum, one bolt must remain wrench tight in order to keep the first member from separating from the supporting member when the nuts are removed from the bolts that are to be shared with the second member. Appendix H is added to the final rule to provide examples of equivalent connection devices. They include ''clipped end'' and ''staggered bolt'' connections.

Steel Erectors Safety Association of Colorado (SESAC) (Ex. 13–207) suggested that the provision cover all double connections, including the installation of floor beams in the web of a beam not over a column. OSHA is deferring to SENRAC expertise that it is not necessary for this provision to address floor beam (filler beam) connection hazards. SENRAC noted that the connector does not have to sit on the floor beam when making floor beam

type of double connections—the connector can sit on the header beam to which the other members are being attached. Also, the structure is much more stable by the time floor beams are ready to be installed.

Several commenters, such as FABCO (Ex. 13–21), described ways of minimizing the double connection hazard by maintaining the one bolt connection throughout the connection process. OSHA agrees that there are methods of engineering a connection point that maintain the one bolt connection requirement of paragraph (c)(1). The staggered bolt method and clipped end connection method are two ways of maintaining the one bolt connection at all times, and do not require the use of any of the alternative methods listed under paragraph (c)(1). These two methods are described in Appendix H.

A commenter (Ex. 13–207) suggested that we include a graphic to show the clipped connection as an example of how to comply with the ''one bolt in place rule''. Diagrams are included in Appendix H to show an illustration of a clipped end and a staggered bolt connection. Methods like clipped end and staggered bolt connections were discussed during the hearing and in comments but were not directly addressed in the proposed standard. The record shows that these are relatively simple and safe methods of engineering out the hazards presented by double connections.

The National Council of Structural Engineers (Ex. 13–308) suggested that we change ''wrench-tight'' to ''snug-tight'' because, they argue, the latter is a known and defined term in the steel erection industry. However, wrench-tight is a term that is consistent with 1926.751(a) of the current steel erection standard. Wrench-tight is also the term recommended by SENRAC , and OSHA defers to SENRAC on this issue

The proposed standard stated that at least one bolt with its wrench-tight nut had to remain connected to the first member unless an attached seat or similar connection device ''is present.'' That phrase has been changed to ''is supplied with the member'' to make it clear that the member must come with the device in order for the erector to be permitted to erect it.

The Steel Erectors Association of America (SEAA) (203X; p. 18) strongly supports the requirement to have seats for double connections because of the historical evidence that collapses occur from the failure of inadequately secured bolts and connection work done on semi-stable structures. The Safety Advisory Committee of the Structural, Ornamental, Rigging, and Reinforcing Steel Industry (205X; p. 328) also thought this was a simple solution to a very big problem.

The record does not include any persuasive evidence to oppose the use of a connection seat to increase the level of safety in making a double connection. However the majority of the debate was in reference to the provision in the proposal that stated: in a double connection, there must be either ''a shop-attached or field-bolted seat or similar connection device present * * *''. The testimony of SENRAC members and AISC panels indicated that there is disagreement as to whether the seats need to be shop-attached, or if a field-attachment should be permitted if there is no shop attached seat.

Some commenters, however, interpreted the proposed standard to allow only shop-attached or field-bolted seats. Under these options, the fabricator would have to either attach the seats itself in the shop or provide holes in the members for the erectors to bolt the supplied seats on in the field.

For example, the American Institute of Steel Construction (AISC) (Ex. 13–209) believed that the proposed paragraph required the attachments to be bolted to the beam and prohibited other field attachment methods like welding or clamping. They would like other methods of adding a seat to be available such as, clamping, welding, and similar positive attachment methods. Also, the Metal Building Manufacturers Association (MBMA) (Ex. 207X; p. 244) indicated that a determination by erectors in the field would be the most efficient method of complying with the standard.

On the other hand, SEAA (Ex. 203X; p. 75) believes the seats should be attached in the controlled environment of a fabrication shop. SEAA testified that while they use extra holes and clips in most of their jobs, a shop-attached clip would be greatly preferable. The SENRAC panel addressing anchor bolts, double connections, and specificity on plumbing-up (Ex. 208X; p. 108) testified that even though the placement of extra holes where double connections occur has been a standard engineering practice in 1964, the hazards that occur during double connections have not been eliminated. The panel (Ex. 208X; p. 206) also had no confidence in ''seat clamps'' and engineering clamps due to the unpredictable loads on the beams. The language ''supplied with the member'' has been substituted for ''is present'' to better reflect SENRAC's and OSHA's intent that the member arrive at the site along with the unattached seat placed on the member in close proximity to where the double connection is to be made on the member. If the seat does not accompany the member to the site, then there is no guarantee that the erector will know that it needs to field attach the seat before making the double connection. Many commenters, including the SENRAC panel and SEAA, were concerned that both the clamps and the unattached seats would end up stored in trailers or in places other than where double connections are being made. Another commenter (Ex. 203X; p. 76) was confident that if the fabricators needed to attach the seats to the beams, the chances that they would be in place during the erection process would be much greater than if the responsibility were left up to erection supervisors.

Some erectors argued in favor of a requirement to shop-attach the seats because they would have too many seat installation methods to deal with on different jobs, they contend that it will be confusing and inefficient for them to try to figure out how to install the seats in each case. Erectors also thought that it would be easier and less time consuming for them to erect steel safely if the fabricators were to install the seats in the shop.

Those who opposed the shop-attached seats, such as the Metal Building Manufacturers Association (MBMA) (Ex. 207X; p. 244) and Basic Metal Products (Ex. 13–245), stated that there are many other devices that are available to erectors to use for the many difficult connections that they have to face. The phrase in the proposed standard, ''or similar connection devices,'' meant that methods other than ''field-bolted or shop-attached seat'' are permitted. While bolting the attachment to the member is the preferred alternative method, it was not the intent of the proposed standard to prohibit other, equally effective methods. OSHA agrees that equivalent devices supplied with the member are acceptable and provides illustrations of such devices in Appendix H.

The final rule incorporates several clarifications. First, in paragraph (c)(1), the proposed phrase ''similar connection device'' has been changed to ''equivalent connection device'' to clarify that devices other than a shop attached or field bolted seat are permitted, as long as they provide equivalent protection. OSHA did not intend that the alternative ''device'' had to physically resemble a ''seat'' as implied by the term ''similar''. ''Equivalent connection device'' requires that the function of the device must mirror that of a seat and be equally effective.

Secondly, the term ''field-bolted'' has been changed to ''field-attached'' to clarify that other attachment methods, such as welding, is permitted.

Haven Steel (Ex. 206X; p. 22) asserted that OSHA does not have jurisdiction to mandate product specifications and designs over which the parties affected by the rule had little or no input. They argued that the standard should put more emphasis on the actions of the steel erector and its employees. Commenters opposing the provision were not necessarily opposed to using an attachment to secure double connection members but were opposed to requiring the manufacturers and designers to shop-install the attachments for the erectors.

Some commenters (Exs. 13–320, 13–21, and 207X; pp. 57–65) argued against both drilling holes in the members for attachments and welding the attachments because of the possibility that some structural integrity of the beams may be lost. The argument against drilling holes for attachments is the same as the one against drilling holes in columns for attaching perimeter cables in § 1926.756(f)(3) of the proposed standard. When holes are drilled in members, they argued, it may require the use of heavier, more expensive, members where they would not otherwise be needed. FABCO (Ex. 13–21) testified that putting holes in the flanges could weaken the flanges unless heavier, more expensive members were used. The Council of American Structural Engineers (Ex.13–320) added that damage may occur due to welding attachments to the columns without proper preheat and that adding holes to members that were not designed to accommodate them could degrade the structural integrity of the member. However, there is no indication in the record that the industry could not engineer in holes or weld on attachments for safety devices for the erection process, just as it routinely accommodates public safety requirements and specifications. Since double connections are a part of the design of the structure, those designing the members would know if they needed to pre-engineer additional holes for a seat or to specify a welded attachment.

OSHA acknowledges that as with other aspects of structural design, incorrect procedures and calculations when drilling holes or welding attachments could reduce the structural integrity of lightweight beams. However, the hazards of double connections made without the safeguards in this standard are great and are acknowledged by most industry experts. Alternatives to installing seats are not to use double connections at all, or to maintain the connection of one bolt with its nut ''wrench tight''. Certainly, in a worst-case scenario, concerns about ''structural integrity of beams'' can be quelled merely by using heavier members, as noted above. OSHA concurs with SENRAC on its conclusion that requirements in paragraph (c) are necessary to reduce the well acknowledged hazards of performing double connections, and that they provide considerable flexibility for compliance.

Paragraph (c) of the proposal allowed the use of a seat if the one bolt connection requirement could not be met. A commenter (Ex. 206X; p. 62) feared that erectors would use seats to temporarily connect beams until they could maneuver other members in place, therefore increasing the probability of a collapse. Temporarily connecting the bolts for the seats may invite the erector to not install the final connection bolts until large portions of the structure are ready to be plumbed up and bolted.

Paragraph (c)(2) in the final rule does not permit such a practice. It requires the erector to secure a seat (designed to support the load) to both the supporting and first members while the double connection is being made. The function of the seat is to provide support to the members until the double connection can be safely connected. Connecting the first member to the supporting member with the seat is a crucial step in making these double connections safely, since one of the dangers is that either the supporting member or the first member will be bumped or will pull away during the double connection process. The connection seat is only intended to facilitate that particular double connection.

Paragraph (c)(2) also explicitly requires that seats or equivalent devices must be designed to support the load during the double connection process. If these devices are to be used, they have to be capable of supporting the weight of the members involved; and that weight may vary significantly from job to job. The erector may not know what the magnitude of the loads are in time to have devices engineered and fabricated for the job. It is more efficient to incorporate this engineering determination into the design of the members and connections.

Some commenters, such as (Ex. 206X, p. 173), believed that it should be solely the erector's responsibility to devise a method in which to keep its employees safe by securing the steel frame of the structure. They also argued that § 1926.754(a) requires structural stability to be maintained at all times. They also point to section 7 of the AISC Code of Standard Practice as support for their position.

Under the AISC Code of Standard Practice indicates that the industry currently recognizes that it is the responsibility of the erector to stabilize the working platform of its employees. However, this does not mean that the best way to ensure that the double connection is made safely is to rely solely on the erector to make whatever arrangements it thinks are necessary. The testimony of the SENRAC members established (Ex. 208X, p. 205) that it would be unrealistic to expect most erectors to have in-house personnel who could make the technical engineering assessments necessary to determine whether a particular device would be capable of supporting the loads during a double connection. In their view, requiring that the device be supplied with the member will provide greater assurance that the device is capable of supporting the loads. The erector does not have the ability to ascertain if a column could accept additional holes or welding, nor the ability to control the column's design.

AISC (Ex. 13–209, attachments 4&5) suggested that OSHA add the phrase ''where constructibility allows'' because there are some instances, which they identified, where they believe seats or attachments will not work. Similarly, Unified Steel Consensus Group (Ex. 13–63) suggest the following addition: ''Where structural design and constructibility does not allow for a shop attached connection device, it shall be noted on the erection drawing and the erector shall adequately brace and support the structural member to prevent movement before nuts are removed from the double connection and the double connection is completed.''

The record shows that an exception that would permit double connections to be made without the specified safety precautions is neither necessary nor appropriate. The final rule permits an ''equivalent'' connection device to be supplied with the member.

Paragraph (d) Column Splices

Paragraph (d) requires that each column splice be designed to resist a minimum eccentric gravity load of 300 pounds (136.2 kg) located 18 inches (.46 m) from the extreme outer face of the column in each direction at the top of the column shaft. This paragraph has been revised to be consistent with final rule § 1926.755(a)(2) (anchor rods/bolts) and to further clarify the type and

location of the eccentric gravity load. This requirement, along with the requirements in § 1926.755(a)(1) and (a)(2) for anchor rods/bolts, will help to stabilize columns that employees have to climb during the erection process. By specifying requirements for certain key building elements, such as anchor bolts, column splices, and double connections, the standard will prevent structural collapses. This section specifies a minimum force that a column splice must withstand without failure before an employee is allowed to climb it. There were very few objections to these provisions.

The Council of American Structural Engineers (Ex. 13–320), AISC (Ex. 13–209), and Basic Metal Products (Ex. 13–245) had concerns about OSHA prescribing design specifications. They believe that the standard should not specify means, methods, or location with respect to column splices—that such requirements may compromise the structural design or seriously affect architectural finishes.

OSHA believes that it is as appropriate to require building components to meet the safety needs of those constructing a building as it is to require a completed structure to meet the safety needs of its occupants. A well established principle of occupational safety and health is that eliminating or reducing a hazard by modifying the design of whatever is posing the hazard is the preferable method of controlling a recognized hazard. OSHA anticipates that by ensuring that column splices are designed to withstand a 300 pound eccentric gravity load, the hazard of collapse due to the instability of the column should be virtually eliminated. This minimizes the number of columns that an erector will need to stabilize before employees climb them. A SENRAC workgroup, with engineering assistance, determined that 300 pounds was an appropriate load. In addition, the 300 pound eccentric gravity load is the same design criteria that is required for column anchorages in § 1926.755(a)(2).

The record does not indicate that this requirement presents significant obstacles to designers with respect to their choice of exterior finishes. Nor does it show that it would be difficult to accommodate the requirements in the structural design.

Paragraph (e) Perimeter Columns

Paragraph (e)(1) of the final rule prohibits the erection of perimeter columns unless the column extends a minimum of 48 inches (1.2m) above the finished floor to permit installation of perimeter safety cables prior to the erection of the next tier, except where constructibility does not allow. Final rule paragraph 1926.760(a)(2) requires that the perimeter safety cables be installed at the final interior and exterior perimeters of the structure's finished floors of multi-story structures as soon as the decking has been installed. When the safety cables must be attached to the perimeter columns, the columns must be at least 48 inches above the finished floor in order for the perimeter cable system to comply with the requirements of Subpart M. Paragraph § 1926.760(d) requires that perimeter safety cable systems conform to the criteria for guardrail systems in § 1926.502.

Some commenters (Exs. 13–320; 13–245; 13–209, p. 19) argued, as with section 1926.756(d), that OSHA has no jurisdiction to put design restrictions on the engineering community. Although they contended that would limit their flexibility in structural design and in the materials they use, they did not specify how their design capability would be impaired. American Bridge Co. (Ex. 206X; p.55–56) suggested that it was more appropriate to place an obligation on the contractor and erector to ensure that ''the cable [is] 42 to 45 inches above the working surface and sufficiently anchored to withstand a horizontal force of X amount of pounds at a point 45 inches above the working surface.''

OSHA is convinced that the industry can accommodate this requirement. As noted, no commenter submitted details on the extent of design impairment or examples of the projected negative effect of this requirement. It is appropriate for OSHA to require the engineering of safety elements into the design of perimeter columns if they provide support for a fall protection system. Paragraph 1926.760(a)(2) requires perimeter cables to be installed on multi-story buildings as soon as the decking is completed. OSHA agrees with SENRAC's conclusion that the presence of holes or attachments on the columns facilitates the erection of the cables therefore minimizing the installers' exposure to a perimeter fall. OSHA also agrees that columns are an appropriate and often-used support for the perimeter safety cable.

Paragraph (e)(2) requires that the perimeter columns have holes or other devices in or attached to them at 42–45 inches above the finished floor and the midpoint between the finished floor and the top hole to permit the installation of perimeter cables, except where constructibility does not allow. This allows the erector to install the cables promptly when the columns have been erected.

A commenter (Ex. 206X; pp.67–68) believed that by specifying the method of erecting perimeter cables, the industry is denied the opportunity to negotiate language in its contracts. The general contractor has no reason to include any language to protect the fabricator because it knows the OSHA regulation requires the fabricator to make the holes or attachments available to be utilized by the erectors. The fabricator has no control over the system's installation, condition, maintenance, or use and subjects the fabricator to lawsuits regarding any accident involving the perimeter safety cable systems.

Fabricators and engineers also argued that the proposal impermissibly regulates employers beyond the steel erection industry by requiring fabricators to install holes or attachment points. Some fabricators testified that this section would limit their flexibility in engineering a structure. Grewe Jenkins Design & Construction Company (Ex. 201X; p.17) stated that by requiring a shop to attach bolts or holes, it would be limiting the methods and means by which an employer may protect its employees from perimeter falls. They also argued this requirement may necessitate regulations for the design of the different types of attachments that fabricators and engineers may use. The American Institute of Steel Construction (Ex. 13–209) objected to OSHA prescribing how to manufacture its product.

A commenter representing AISC (Ex. 206X; p. 59) testified that fabricators do not control the erection sequence and schedule of placement of structural steel elements which is set forth on contract documents. Neither do they dictate, he argues, how steel erectors will utilize the holes and attachments that they are required to provide. In his view, the fabricator assumes liability because it would be difficult to defend litigation regarding system failure: (a) If they cannot be assured that it will be erected and maintained properly, and (b) if they have no prior knowledge of where and how the members with the holes or attachments are going to be installed during the erection sequence. AISC believed that this provision would make fabricators liable for any failure of the perimeter cable system, including the incorrect field installation of attachments. They assert that this would be unfair since they have no control over how the cables are installed or maintained. Hagerman Construction Corporation (Ex. 13–224) commented that additional staff would be needed and the cost of liability insurance would skyrocket. These combined factors, they

argue, could help to drive up the price of the steel members.

OSHA requires that holes or attachments for erecting perimeter cables are on or in the perimeter columns before the steel can be erected because it believes that it is appropriate to engineer safety components into a structure just as public safety specifications are adhered to in the drafting stage of a structure.

The proposed provision, paragraph (e)(3), stated that holes or devices ''shall be provided by the fabricator/supplier and shall be in or attached to perimeter columns * * *''. OSHA has revised this provision to make clear that, in addition to requiring that the columns have holes or devices, the erector may not erect perimeter columns, unless the columns comply with paragraph (e)(2). In final paragraph (e)(2), the erector is prohibited from erecting the perimeter columns in the absence of the holes or attachments.

SENRAC and OSHA agree that getting the perimeter safety cables erected properly and promptly will help to reduce the number of falls to the exterior of the building. This provision not only affects steel erectors but other trades that follow them in the construction sequence of the building. Incorporation of the perimeter system into the design of the structure enables all trades to be protected against perimeter falls most quickly and effectively.

Some commenters were not convinced that providing the erectors with attachments will help to aid in the erection of perimeter cables. Southern Iron Works (Ex. 206X; p.107) asserted that they have often provided steel erectors clips that the erectors did not use. Since the proposed standard did not expressly require the erector to use the holes or attachments supplied by the fabricator, they argued that the fabricator may needlessly incur this expense.

While the standard does not require the erectors (or any other trade) to use the holes or attachments, it does require the installation of perimeter cables (see § 1926.760). OSHA assumes that the installer of the perimeter cables will use the holes or attachments because that will be easier then the option of installing stanchions to support the cable.

An erector representing the Steel Erectors Association of America (SEAA) (Ex. 203X; pp.73–74) testified that it is common for holes/attachments to be included in contract requirements through negotiation. He stated that he had holes drilled in columns on 90% of his jobs, and that fabricators have been providing them for 5 years for projects in his area. A general contractor (Ex. 203X; p.168–169) decided that it made more sense to use holes/attachments, since using the columns does away with the need for installing stanchion posts. SEAA stated that if holes/attachments were required by regulation, steel fabricators would comply with little or no economic damage to the industry because all steel erection projects would have to follow the same rules. Erectors and fabricators are presently negotiating these sort of safety measures into their contracts.

The steel erection industry already meets a variety of architectural and public safety needs, and designs and manufactures structural components so precisely as to locate holes and calculate loads for every nut and bolt. OSHA is confident that this industry can also arrange to have these holes/attachments in perimeter columns. These holes and/or attachments will make the construction of the structure safer for the employees that have to use it as a work platform. Commenters in opposition to requiring holes and/or attachments gave no explanation in the record as to why this requirement would make it more difficult to design or produce columns.

The claim that holes/attachments would affect architectural finishes was similarly unsubstantiated. Even if there were some instances where that would be a problem, the final standard includes an exception where constructibility does not allow them to be installed.

FABCO (Ex. 13–21) stated that putting holes in the flanges could ''cripple'' the strength of the flanges unless heavier, more expensive members were used. They suggest that perimeter cables be supported by an engineered, temporary clamping device of the erector's design or, at the erector's option, by making additional holes or using shop-installed column attachments.

OSHA acknowledges that a hole in the flanges of a column could compromise the structural design of the structure, especially if the column is part of a ''moment resisting'' frame. ''Crippling'' may occur when the web is subjected to high compressive stresses from concentrated loads and/or reactions. Failure by fracture could also occur under some circumstances. However, the claim that the holes/attachments may compromise the structural design assumes that the holes would be installed only after the column was already designed, without regard to the need to accommodate the holes. However, it is clear that from an engineering standpoint, the effect of holes (or attachments) on the strength of columns needs to be factored into the structural design. The evidence that was introduced to show why that could not be done was not convincing. While in some instances larger columns might be necessary to accommodate holes, information on the number of those instances was not submitted to the record. It should be noted that holes are not required if constructability does not allow, and that the provision allows the installation of attachments instead of holes.

AISC (Ex. 13–209) stated that attachments could get damaged or cause stacking problems in stockyards. FABCO (Ex. 3–21) indicated that they could get knocked off while being delivered. While these comments indicate that more care would have to be taken, these are not particularly difficult problems to overcome. Some steel components already have angles and other protruding attachments.

Perimeter cable holes can be engineered into the original design of the columns as any other hole would be. At times, perimeter columns must be strengthened to compensate for drilling a hole in a structural member, adding cost to the process. However, OSHA believes that those instances will be minimal in comparison to the number of columns that currently are able to accommodate perimeter cable holes.

E–M–E Steel Erection Company (Ex. 202X; p.31) testified that they currently weld nuts to columns while others use washers in the field. They think that having holes put in the columns will cost a few dollars more but that they are worth the extra cost. In addition, the costs must be considered in the context of the lives that can be saved by both the fall protection afforded by the perimeter cables and by the speed in which they may be erected, which will greatly reduce employees' exposure to fall hazards while installing the cables.

The physical criteria that the perimeter cables must meet are found in § 1926.760(d)(3). That section references § 1926.502, and Appendix G repeats that section to assist employers and employees.

Section 1926.757 Open Web Steel Joists

Some of the most serious risks facing the ironworker are encountered during the erection of open web steel joists, particularly landing loads on unbridged joists and improperly placing loads on joists. Based on an analysis of ironworker fatalities from January 1984 to December 1990 OSHA determined that of the approximately 40 fatalities caused by collapse, more than half were

related to the erection of steel joists (Ex. 9–14A). Although the existing OSHA steel erection standard addresses joist hazards in a limited manner, this final rule section significantly increases protection from the most hazardous activities during joist erection. The Agency believes that the combination of specification and performance requirements in this section will provide more comprehensive protection to workers engaged in these activities.

Paragraph (a) General.

Paragraph (a) of the final rule provides general requirements for the erection of steel joists. To make the requirements of paragraphs (a)(1) through (a)(5) of the proposed rule more understandable, OSHA has reorganized them in the final rule. The requirements that relate to stabilization of the joist attached at a column are contained in paragraph (a)(1). Those joists that do not, for design reasons, attach at the columns are addressed in a new paragraph (a)(2). Paragraphs (a)(3) and (a)(4) address conditions that apply to joists that attach either at or near the columns.

Paragraph (a)(1) requires that where steel joists are utilized, and columns are not framed in at least two directions with solid web structural steel members, a steel joist (commonly referred to as the ''OSHA joist,'' see explanation below in the discussion of paragraph (a)(1)) must be field-bolted at the column except as provided in paragraph (a)(2) of this section which addresses these joists installed near the column. This paragraph is nearly identical to the existing steel erection standard provision, § 1926.751(c)(1). The final rule paragraph (a)(1) differs from the proposed paragraph (a)(1) in that it does not contain the phrase ''or near'' when describing the location of the joist in relation to the column. The SJI (Ex. 13–208) suggested deleting this language in paragraph (a)(1) and treating joists installed near the column separately because of feasibility considerations. The purpose of the stabilizer plate, required by paragraph (a)(1)(i) of this section, is to provide stabilization and prevent rotation of the extended bottom chord of the joist required by paragraph (a)(1). The Agency agrees with SJI that when the joist is not located directly at the column, it is not possible to stabilize the bottom chord using a stabilizer plate on the column, and some other means of stabilizing the bottom chord must be provided. Therefore, paragraph (a)(2) has been added to the final rule to address the situation where a steel joist attaches near, but not at, the column. SJI also suggested deleting the language, ''to provide lateral stability to the column during erection,'' which describes the purpose of bolting the joist. SJI argues that joists are not designed to do this but simply to support a uniform load. Nonetheless, this language comes from the existing standard and SENRAC believed it to be an accurate description of an additional function of this joist, whether designed for this purpose or not. Accordingly, the final rule retains this language requiring lateral stability during erection.

Final rule paragraphs (a)(1)(i) through (a)(1)(iii) refer to special requirements for joists connected at the column. Paragraph (a)(1)(i) is virtually identical to paragraph (a)(4) of the proposed rule. It requires a minimum 6-inch by 6-inch vertical stabilizer plate to extend at least 3 inches (76 mm) below the bottom chord of the steel joist. The plate is required to have a 13/16 inch (21 mm) hole placed in it to provide an attachment point for guying or plumbing cables. The SJI (Ex. 13–208) suggested language to better describe the stabilizer plate. They noted that for the stabilizer plate to function as intended, the plate would need to have a minimum length and width of 6 inches and be oriented vertically so that the bottom chord of the joist will straddle the plate. Bottom chords of joists are essentially two angle irons placed back to back with steel webbing welded in between into triangles. The space created between the angle irons by the webbing is large enough so that the bottom chord, when extended to the column, can straddle the stabilizer plate, thus preventing the OSHA joist from rotating. OSHA agrees that these changes would improve the requirement. Paragraph (a)(1)(ii) works in conjunction with paragraph (a)(1)(i) and requires that the bottom chords of steel joists at columns be stabilized to prevent rotation. This provision largely carries forward the language of proposed paragraph (a)(5). The SJI (Ex. 13–208) commented in support of this provision stating that it ''* * * clarifies and reiterates the need to prevent horizontal axis rotation of joists and joist girders during erection.''

The foregoing provisions will result in a more stable primary structure upon which to erect the remaining steel joists in each bay. Since the sequence of guying is essential to safety, a stabilizer plate provides a ready attachment point for more efficient guying, thus helping to prevent collapse as the steel is set in place.

Final rule paragraph (a)(2) attempts to clarify the proposed rule by addressing the situation where the joist required by paragraph (a)(1) of this section does not attach at the column but, rather, near the column. Two commenters (Ex. 13–208 and 13–153) suggested that the standard address this situation. It was noted by a commenter (Ex. 13–153) that this can occur at expansion joints, unequal bay spacing and non-rectangular buildings. The Agency agrees with the commenters and recognizes that the proposed rule paragraphs (a)(1) and (a)(5) could not apply unless the joist or joist girder were attached at the column. Since the joist or joist girder cannot always be attached at the columns (due to design constraints), this paragraph provides a means to ensure that the joist nearest the column, (that serves the same purpose as a joist at the column) is as stable as a joist that is attached at the column.

The Agency believes that the clarification referred to above is necessary due to the feasibility and sequencing complications that arise when OSHA joists are not attached at the column. For example, attaching a stabilizer plate to a column is much simpler than providing the same plate on a narrow solid web beam or a steel joist girder. In addition, since the sequencing of erection of the structure is frequently not known beforehand, the erector needs to stabilize the bottom chord of the OSHA joist on both sides of the column. This is necessary because erection could begin at either end of the column line as dictated by conditions at the site at the time of erection.

Accordingly, final rule paragraph (a)(2) requires that where constructibility does not allow the steel joist to be installed at the column, an alternate means of stabilizing joists must be installed on both sides near the column. Such alternate means must provide stability equivalent to OSHA joists attached at the column; be designed by a qualified person; be shop installed; and be included in the erection drawings. OSHA believes that, even though OSHA joists are attached to the column the overwhelming majority of the time, workers need to receive the same protection from collapse when the OSHA joist is attached near the column. Thus, the alternate means of stabilization must be considered and planned in the early stages of design and material preparation.

An additional protection that was intended by SENRAC but not specifically referred to in the proposal had to do with the release of hoisting cables for OSHA joists. The Committee addressed timing of the release of hoisting cables for all joists other than OSHA joists in § 1926.757(d). Seeing the need for clarification, SJI recommended

language addressing the release of hoisting cables from the OSHA joist (Ex. 13–208). Accordingly, both final paragraphs (a)(1) and (a)(2) of this section require that hoisting cables not be released until the seat at each end of the steel joist is attached and the joist is stabilized. For OSHA joists that are field-bolted at the column, paragraph (a)(1)(iii) prohibits hoisting cables from being released until the seat at each end of the joist is bolted and both ends of the bottom chord of the joist are restrained by the stabilizer plate. In addition, for OSHA joists installed near the column, paragraph (a)(2)(ii) prohibits hoisting cables from being released until the seat at each end of the joist is field-bolted and the joist is stabilized.

Paragraph (a)(3) (proposed paragraph (a)(2)) requires that a steel joist (OSHA joist) at or near the column that spans 60 feet or less be designed with sufficient lateral stiffness that the joist does not need erection bridging to maintain its stability when an employee goes out onto it to release the hoisting cable. Since the joist at the column is the OSHA joist and is either the first joist in place or the joist that boxes the bay, there is no other joist in place nearby for the erector to attach erection bridging. Therefore, without this provision, compliance with the final rule's bridging requirements would be infeasible for an OSHA joist. Consequently, the OSHA joist itself must possess sufficient lateral stiffness to allow the erection process to progress safely. One comment (Ex. 13–208) was received in support of the requirement. The commenter felt that the need to design and manufacture heavier joists for placement at columns is reasonable to insure the safe placement of these critical OSHA joists.

Paragraph (a)(4) of the final rule (proposed paragraph (a)(3)) addresses a longer steel joist at the same position. This provision requires that steel joists located at or near the column that span more than 60 feet must be set in tandem, i.e., two steel joists must be attached together, usually with all bridging installed (both bolted diagonal erection and horizontal bridging). These larger OSHA joists are commonly used in open structures such as warehouses, gymnasiums and arenas. This provision also allows the use of alternate means of erection of such long span steel joists, provided that the alternative is designed by a qualified person to ensure equivalent stability and is included in a site-specific erection plan. This paragraph is effectively the same as proposed paragraph (a)(3) except that ''or near'' was added as explained above. According to SJI (Ex. 13–208), joists tied together with standard bridging will not possess sufficient stability to serve as a working platform in all cases. However, both the proposed rule and the final rule require that the erector install all bridging (not just erection bridging) when these long joists are set in tandem as OSHA joists.

Compliance with these provisions should help to satisfy the stability requirements of paragraph (a)(5) of this section (proposed paragraph (a)(6)). Paragraph (a)(5) prohibits the placement of steel joists or steel joist girders on any support structure unless it has been stabilized. This is essentially the same as proposed paragraph (a)(6) but it has been revised to include steel joist girders along with steel joists. This language change was recommended by SJI (Ex. 13–208). They also commented in support of the requirement by stating that this paragraph to stabilize joist support structures is one of the best elements of the steel erection standard and will substantially enhance worker safety in steel erection. OSHA agrees that the provision needs to include steel joist girders for consistency since they are also connected to the support structure.

Another commenter (Ex. 13–210) indicated that the term ''stabilized'' is open to interpretation and should be defined. OSHA disagrees and feels that the requirements in paragraphs (a)(1) through (a)(4) of this section together with provisions in several other sections of the standard adequately set out the stability requirements for the structure without the need to define ''stabilized''.

Paragraph (a)(6) (proposed paragraph (a)(7)) of the final rule addresses the hazard that arises when a single steel joist or a bundle of joists are placed on the structure and then left unattended and unattached. An example of this might involve lighter steel joists, under 40 feet in length, that would not require erection bridging under this section. A common practice in erecting these lighter joists, which can be set in place by hand, is to have a crane set the columns, steel joist girders, or solid web primary members and bolted joists at the columns as required by paragraph (a)(1) of this section, thus boxing the bays. The crane would then place a bundle of filler joists at an end or, more likely, at the center of the bay for installation by hand, and then move on to the next bay. Because cranes are among the more costly pieces of equipment on a steel erection job, minimizing crane time at the site is cost effective. This provision requires that, when steel joists are landed on structures, they be secured to prevent unintentional displacement, *i.e.,* the bundles must remain intact prior to installation until the time comes for them to be set. This paragraph also prevents those ironworkers who are shaking out the filler joists from getting too far ahead of those workers welding the joists, a practice that leaves many joists placed but unattached. Paragraph (b)(3) of this section, discussed below, requires that at least one end of each steel joist be attached immediately upon placement in its final erection position and before additional joists are placed. Another example of a situation addressed by this paragraph is if the exact dimensions of a piece of mechanical equipment to be installed in the decking are not known. A common practice, when this occurs, is to leave a joist unattached until the dimension is known. This paragraph requires such a joist to be secured (probably to the support structure or an attached joist) pending its final attachment. One comment was received by SJI (Ex. 13–208). SJI supported this provision stating that it ''* * * will greatly reduce accidental displacement caused by striking the bundles while placing other construction materials.'' This paragraph is substantively unchanged from the proposed rule.

Paragraph (a)(7) of the final rule (proposed paragraph (a)(11)) addresses the potential for failure that can occur when a steel joist or joist girder is modified from its original manufactured state. As reflected in the proposed rule, the Agency believes modifications to joists can have disastrous consequences if performed by jobsite personnel without taking into account the design characteristics of the joist or joist girder. This provision prohibits modification without the prior approval of the project structural engineer of record. The only change to this provision from the proposed rule is the inclusion of steel joist girders for consistency since neither joists or joist girders should be modified without SER approval. This language change was recommended by SJI (Ex. 13–208).

Final rule paragraph (a)(8)(i) requires that, except for steel joists that have been pre-assembled into panels (panelized), connections of individual steel joists to steel structures in bays of 40 feet (12.2 m) or more shall not be made unless they have been fabricated to allow for field bolting during erection. This means that both the joists and the supporting member must be fabricated with holes to allow the joists to be bolted to the supporting structure; otherwise they are prohibited from being erected. Final rule paragraph (a)(8)(ii) requires that, unless

constructibility does not allow, these connections must be made by field bolting.

These paragraphs replace paragraph (a)(8) of the proposed rule, and have been modified to require that the holes in the joists be used for the connection of the joists and to allow for welding of the joists in situations where constructibility will not permit the joists to be bolted. As reflected in the proposed rule, the Agency has found that many long steel joists that are placed in bays of 40 feet or more have a greater tendency to twist or rotate, which creates hazards for the workers installing them. This finding was based on several examples of hazardous situations that steel erectors encounter when working with these long joists. The record shows that certain joists that are thin and flexible can be difficult to install because of their ''sweep'' (tendency to bend). Bolting these types of joists first allows straightening of the joist, correcting its camber and eliminating torque. Additionally, after bolting, final welding can be more easily accomplished. Bolting is safer whenever unattached joists could be displaced by wind or construction activity, by the movement of employees, by trailing welding leads, by accidental impact against the supporting structure by a crane or other equipment, or by harmonic motion, or vibration. Further, joists can roll and pop welds due to the movement of a worker on the joist or the stresses caused by removing the sweep, which could cause a collapse. Finally, there are unique hazards associated with welding. These include impairment of the vision and balance of an employee working at elevation while wearing a welding hood.

Many comments were received in response to proposed paragraph (a)(8). These comments fell into three major groups. In the first group of comments, the commenters claimed that holes for bolting joists were not needed because: (1) Welding joist ends [instead of bolting] is not dangerous; (2) there are no data supporting a need for the requirement; and (3) the holes will have to be drilled, but bolting was optional, many of the holes would not be used by the erector. Consequently, they claimed, millions of unused holes would be needlessly drilled. They contended that welding is really a safety concern, in this situation OSHA should require that the holes be used.

Addressing the first and second issue of this group, several commenters stated that welding joist ends is not dangerous and there are no statistics to support the need for the requirement. They contended that the assumption that welding joist ends is more hazardous than bolting is not supported by industry data. Specifically, some commenters referred to a Steel Joist Institute (SJI) study of 100 accidents involving steel joists over a 14 year period which showed that none were a result of welding joist ends. Some commenters also referred to OSHA IMIS data reviewed by both OSHA staff and a SENRAC workgroup (Exs. 9–14A and 9–42) showing no fatalities related to joist end welding over the seven and eleven year periods, respectively. Two commenters (Ex. 13–9 and 13–18) stated that, based on their experience, they had never heard of or witnessed an accident related to welding of joists. The Steel Joist Institute (Ex. 66), referring to the SENRAC meetings, comment period and public hearing, stated ''[n]o data was produced which suggests that bolting is inherently safer than the welding of joist ends to their supporting members.''

OSHA's accident data do not cast any light on whether welding of joist ends is a hazard. These data in many cases do not provide enough detail as to the role of welding in the reported accidents involving joists.

Addressing the third issue of this group, numerous commenters asserted that the proposed rule would require millions of holes to be drilled or punched, most of these holes would not be used since the proposal did not require that these members be bolted. These concerns become moot since the final rule does require that the members be bolted unless constructibility does not allow. Eleven commenters specifically stated that, since the requirement would be optional, erectors would most likely choose not to use the holes. One commenter in particular (Ex. 13–158) stated that ''[i]t is apparent that this provision would cause joist manufacturers and steel fabricators to punch or drill millions of unnecessary holes every year.'' Several other commenters (Exs. 13–21, 13–25, 13–97, 13–186 and 13–279) also suggested that millions of holes will be drilled or punched and will not be used. One commenter (Ex. 13–290) stated ''* * * these connections would not be used especially since they are optional.'' Another commenter (Ex. 13–144) responded ''[t]he only significant effect of this new requirement is increasing the cost of fabrication of steel girders.'' and ''* * * it only requires manufacturers to provide the holes in the girders. The proposed rule does not require the steel erectors to actually use the holes.'' A commenter (Ex. 13–309) stated they believe that ''* * * this rule will add cost to fabrication of joists and that the bolted connections will not be used by steel erectors in the field.'' Metro Fabricators, Inc. (Ex. 13–62) responded ''[d]ue to the additional cost involved in bolting each joint, our erectors (subcontracted) have indicated that they would elect not to use the bolted procedure.'' As indicated above, the final rule requires that the holes be used and the connections be made by field bolting unless constructibility does not allow.

In the second major group of comments, commenters claimed that bolting is more dangerous than welding because: (1) Erectors will install erection bolts and then replace them with high strength bolts. To do that the surface will have to be prepped in accordance with AISC. Or, if the designers require a final weld, the erector will have to come back to weld, doubling the connection time and increasing fall exposure. If high strength bolts are required for a final connection, the erector must handle extra tools, bolts, nuts, washers, etc. and prep the surface; (2) Unused holes will weaken the members. If an erector elects not to use the holes, the designer may require that the holes be filled since unfilled holes may be a deficiency; (3) The holes will have to be slotted, which does not provide the rigidity of a weld; and (4) Welding is easier than installing a bolt from the top and a nut from the bottom.

Addressing the first issue in this group, many commenters (41) raised a concern about the structural integrity of the bolted connection because the holes would have to be slotted or oversized. In particular, they argued that bolts used to meet the proposed paragraph would be erection bolts, which would have to be replaced with high strength bolts. This, they asserted, would require that the surface also be prepped in accordance with AISC requirements. One commenter (Ex. 13–357) claimed that if the designers require a final weld, the worker would have to come back to weld the connection, also doubling the connection time and increasing fall exposure. These re-connections would be necessary to provide lateral stability to the top flange of the supporting member. Another commenter (Ex. 13–342) stated:

> * * * the erection connection will not be the final connection. A final connection by welding or replacement of the erection bolts with high strength bolts will have to be provided. The bolted connection would require proper cleaning and preparation of the connecting surfaces, use of plate washers, and torqueing of the bolts.

Moreover, erectors would not install final high strength bolts during this erection phase due to the time to prep and install the bolts to AISC

specifications. A final bolted connection during this phase would be extremely expensive since the crane would be on site during the whole process. As indicated below, erectors want to get the joists up as quickly as possible to reduce the crane time on the job.

The Professional Engineers Group, Inc. (Ex. 13–110) responded that the ''[b]est case scenario is the erector uses erection bolts and then goes back to make a final connection, either bolted or welded. This places the erector's personnel in a position twice that can lead to an accident rather than once.'' A steel erector (Ex. 13–118) commented ''[t]he use of erection bolts is only a temporary attachment; a worker will still have to return to each location to ''complete'' the connection, resulting in an increased exposure.'' Further, this commenter stated ''* * * the net result of this proposed rule change will be increased costs, reduced market share, and increased worker exposure.'' A steel fabricator (Ex. 13–283) responded that their joist suppliers had advised them that ''* * * a bolted connection will very often not be acceptable for a final connection since more load may be present than can be transferred without additional welding.''

Four commenters (Exs. 13–6, 13–57, 13–89 and 13–277) suggested that if high strength bolts would be required for a final connection, the worker would have to handle extra tools, bolts, nuts, washers, etc. and as mentioned above, the surface would be required to be prepped prior to installing the bolts. These added activities would create additional hazards to the steel erector. One commenter, a General Contractor (Ex. 13–6), responded that the proposed paragraph (a)(8) would: increase the number of falling/dropped objects creating an overhead hazard; increase the possibility of pinching, crushing or cutting fingers, and; increase injuries due to the significant amount of time needed for the alignment process. These commenters claimed that the bolts will only serve as a temporary connection and that a rigid final connection will be required by either replacing the erection bolts with high strength bolts or welding the joist ends.

All of these concerns are addressed by the revision to paragraph (a)(8) in the final rule, which requires the use of bolts in the initial connection but is silent on the final connection. The bolted connection covered by paragraph (a)(8) serves as an initial erection connection, making the structure stable more quickly for the worker. In addition, the erection bolts would not need to be replaced by high strength bolts where the final connection is made by welding. If the employer elects to have the final rigid connection to be a bolted connection, the surface preparation would then be necessary. However, whether bolted or welded, the final rigid connection will be made from a deck or otherwise more stable structure. Thus, the employees performing the final connection will have lower exposure to collapse and falls.

The Agency believes that the total time involved by the worker in making a complete connection as required by this provision is actually less than making an initial and final welded connection. As discussed in more detail below, the erection bolt takes about 15 seconds to install. The welder will not be exposed to the hazards of welding on or at an unstable connection or sites because the joists will be stable at the point they are connected to the primary structure with these bolts. As Mr. Cushing testified, (Ex. 208X; p. 399) when performing the final weld, ''[Y]ou would weld in production mode. You wouldn't be welding and tying up the crane.'' Since much of the testimony against this provision was economic in nature, OSHA recognizes that freeing the crane up sooner would result in a cost savings.

The contention that the worker would have to do the connection twice—once to initially install an erection bolt and again to replace it with a permanent, high-strength bolt (or weld the joint)—is based on two assumptions: first, that the initial bolts would be erection bolts, and second, that the need for slotted holes to make the initial connection may require a final rigid connection to replace the erection connection, thus requiring workers to visit the connection twice. As explained below, this provision does not create the need for an additional visit to the connection since this is already necessary when initial welded connections are used.

OSHA notes, however, that the Steel Joist Institute Technical Digest No. 9 currently recommends that ''Immediately after each subsequent joist is set in its proper position, one side of the joist bearing seat on each end of the joist should be tack welded.'' The Technical Digest further recommends that ''After all of the bridging is installed, the final welds are made on the bearing seats of the joists.'' Thus, the SJI recommendations already require two visits to the joist end attachments.

Under current practices, where welding is used for the attachment of joists, the worker welds one end of the joist, installs bridging which helps to straighten out the joist, and then welds the other end. Normally, both sides of one end or alternate sides of both ends are attached to the primary member with a weld smaller than the final weld required in § 1926.757(b). This smaller weld is commonly referred to as a ''tack weld''. This allows the worker greater flexibility in pulling the sweep out of the joist while installing the erection bridging. Nevertheless, even when using welding to attach joists, a second visit to the initial attachment point must be made to make the final weld.

Some commenters (Ex. 13–6, 13–89, 13–97 and 13–191) stated that welding is easier and safer than bolting and that welding is currently the recommended method of attachment by the Steel Joist Institute. The Agency expects that this will continue to be the standard practice for joists in bays less than 40 feet, and the final rule does not require field bolting for these shorter joists. However, due to the inherent instability of joists over 40 feet and other considerations discussed above, final paragraph (a)(8) provides a safer environment to erect the longer joists. As discussed earlier, even if the joists are attached with erection bolts initially, the erector may make the final attachment by welding—but the connection work will then be performed from a more stable structure.

Addressing the second issue of this group, many commenters (see for example Ex. 13–97 and 13–228) were unsure whether the designers will require unused holes to be filled. This will not be a concern since in most cases the final rule requires that the holes be used unless constructibility does not allow. Commenters generally felt that the holes will either have to be filled or larger members used to account for the holes. If the holes require filling, the commenters suggest, there would be a significant burden on the erector. It is unclear how many erectors would choose to bolt joists if given the option. According to the Steel Erectors Association of America (SEAA) survey of their members (Ex. 29), most SEAA members would elect not to bolt. In that survey, however, 11 members did state that they felt this is a safe practice. Paragraph (a)(8) of the final rule requires that holes be provided for field bolting, and that for the initial connection of these joists be performed by field bolting, with a very limited exception. The Agency agrees that it would be inappropriate to require the holes be provided and not require that they be used.

As mentioned above, many commenters stated, if it were an option, that erectors would elect not to use the optional holes as proposed for connection of the joists. This led to commenters concerns as to whether the

unused bolting holes would weaken the structural member and whether the erector would need to fill them. Four commenters responded directly to this issue (Exs. 13–97, 13–153, 13–228, and 13–261). SteelFab (Exs. 13–97 and 13–261) stated ''[o]wners and even designers may not know whether these open holes are a structural deficiency.'' On the other hand, a commenter (Ex. 13–228) feels strongly that ''* * * the architect will most certainly require erectors to plug the unfilled holes, again resulting in increased exposure of the erectors.'' In addition, HABCO (Ex. 13–153) suggested ''[t]here is a huge design penalty for open holes in a girder top chord versus holes containing bolts.'' and ''[t]his, in turn, will require the erector to either drag an air hose to each end of each joist, or a torque wrench.'' This commenter went on to state that the girder size would have to be increased if there are holes in the member that might not get filled, leading to an associated cost increase of approximately 25%. ''Therefore, if the designer is required to design holes into the girder top chords, and if the fabricator is required to furnish holes, the erector *must* be required to fill them with properly sized and torqued bolts.'' As already discussed, these concerns of unfilled holes are all addressed by bolting requirements in the final rule, requiring the holes to be used.

In addressing the third issue of this group, many commenters (Exs. 13–43 through 13–48, 13–54, 13–55, 13–56, 13–71, 13–77, 13–152, 13–217, 13–256, 13–265, 13–266, 13–355) responded that the holes required by proposed paragraph (a)(8) would need to be slotted (or oversized) and that slotted holes would not provide the necessary rigidity that a weld does. EMC Structural Engineers (Exs. 13–43 through 13–48) noted that to allow for field tolerances as a result of the proposed provision ''* * * all bolt holes will not be simple round holes but instead will be slotted holes which will allow the sweep to remain in the joist.'' Another commenter (Ex. 13–217) stated that the requirement would require installing bolts and then having to weld the joist ''to freeze the connection'' as a result of using a slotted hole on the joist. In addition this commenter stated that using ''* * * proper amount of bridging as the joists are being set, and using an established safety procedure, we can set the joist safely without bolting each joist as they are set.'' Another commenter (13–335) responded that they:

> * * * have spoken with several joist manufacturers and they have indicated that in order to meet this proposed provision, they will have to pre-punch all joists with [slotted] holes. The slotted holes would be required for field adjustments/construction tolerances. This would create a significant problem from our (the Structural-Engineer-of-Record's) standpoint. With slotted holes placed in the joists for bolting, we would have to design the beams as laterally unsupported.

These commenters indicated that holes must be slotted to allow for field adjustments. They contended that since the joists are long and tend to curve somewhat, some room is needed to pull the joist into place; exact sized holes would not, in most cases, be workable, the holes would have to be slotted. This, in turn, would not allow the initial connection to serve as the final rigid connection, and most likely a final weld would be necessary. OSHA recognizes the validity of some of these concerns. The final provision contemplates that the initial bolted connections will, in fact, be temporary connections and that the joists will be stabilized with a final weld or high strength bolt connection for the rigid connection. The required initial bolting is intended to increase employee safety during the initial placement and connection of the joists.

The fourth issue of this group was addressed by two commenters (Exs. 13–97 and 13–165) claiming that welding is easier than bolting. They suggested that welding is a faster and safer anchoring application for joists, and that it is easier to weld from the top than install a bolt from the top and a nut from the bottom. In contrast, Phil Cordova, SENRAC member and owner of a steel erection company, described the time it takes to weld versus bolting the joist (Ex. 208X; p. 199). When asked how long it takes to tack a joist initially, Mr. Cordova stated:

> You have many considerations that take place there. You need to get the endow of a joist. You need to find the proper location. You need to get a man up there who is in a secure position to work without vision of the ground by working under a welding hood to tack this. A tack could take quite a significant amount of time. Meaning, by the time they get set up in position, it could be five to ten minutes on each tack.

Further, Mr. Cordova described the time it would take to put in an erection bolt and tighten it by stating:

> That would just be a few seconds. Quite significantly, under a minute. We are talking, by the time you thread the bolt down through the hole and put the nut on it, an ironworker could put each nut and bolt on there on the magnitude of about 10 to 15 seconds—I would think.

In the final analysis, the issue is, whether an initial joist attachment with erection bolts provides greater stability and exposes the employee to less risk of falls or collapse than an initial joist attachment with tack welds. OSHA believes that it does. OSHA believes the bolting requirements of this paragraph will reduce both fall and collapse hazards.

The third major group of comments on this paragraph addressed costs, fabrication burden, and feasibility issues.

Some commenters felt that the bolting provision was unnecessary since the other requirements in § 1926.757 adequately addressed the activities and procedures that cause the accidents in joist erection. According to the commenters, joist collapses are most often associated with inadequate bridging and placing a construction load on unstable, un-bridged joists. One commenter (Ex. 13–40) stated:

> * * * all joists are bolted adjacent to the column in each bay [currently required by § 1926.751(c)(1) and proposed as § 1926.757(a)(1)]. This, along with the recent requirement for joists of 40 feet and longer to have bolted bridging in place before slackening the hoisting lines [proposed § 1926.757(d)(1)], and not permitting the application of any loads to the joist until the bridging is installed [proposed § 1926.757(e)(2)], provide a safe erection procedure. I am not aware of any instances where, when these procedures were followed, there has been an accident that additional bolting of the ends of the joists would have prevented. All of the accidents are a result of direct violations of these requirements.

Another commenter, the USCCG (Ex. 63), suggested that:

> [a]ny possible safety concerns addressed by this paragraph are better addressed by the other joist provisions dealing with installation and anchorage of bridging, keeping the hoisting cable in place until one end is attached, stabilization of the structure prior to installing joists, among other provisions * * * The causes of joist collapse are addressed by the other provisions of [proposed § 1926.757].

The Steel Joist Institute (Ex. 66) agreed that other provisions in proposed § 1926.757 addressed joist erection hazards and stated:

> [t]he holes for bolting are not required to prevent unintentional displacement as the proposed rule contains a multitude of other provisions that address this concern. Specifically, paragraphs (a)(2), (a)(6), (a)(7), (b)(3) and (c)(1)[referring to paragraphs of proposed § 1926.757] * * *

The Agency agrees that the proposed requirements for landing and placing joists, structure stabilization prior to joist erection, and attachment requirements contained in paragraphs (b)(3) and (c)(1) address many of the hazards identified as causing many

accidents in joist erection. However, the hazard addressed by paragraph (a)(8) is uniquely associated with long, limber joists and is not adequately addressed in these other provisions of the standard.

Several concerns were raised by commenters about the feasibility of bolting. Specifically, the preamble of the proposed rule stated that prior to sizing a structural member for supporting mechanical equipment, the structural engineer of record or design engineer must know the exact operating weight and physical footprint of the equipment that will be imposed onto the structure. This type of information is critical in the sizing of the foundations and the primary and secondary structural members (63 FR 43473). Their concern was that if the size of the equipment is not known prior to fabrication of the steel members, joists may need to be moved to accommodate the equipment during erection. In that situation, the bolt holes would be in the wrong place and another means of attachment would have to be used. Seven commenters responded to the issue of location and size of mechanical equipment. Two commenters (Ex. 13–294 and 13–308) stated ''[t]he structural engineer does not need the exact size, weight or location of equipment to properly size the members. Approximate weights and dimensions are sufficient for design.'' Another commenter (Ex. 13–184) responded that:

> * * * The supporting member of [the] joist can be drawn & fabricated without knowing the exact location of [the] bar joist since the joist is field welded to the supporting member. Delays in fabrication and shipping of these supporting members will become commonplace. Coordination will become a nightmare.

In a post hearing comment (Ex. 52), the National Council of Structural Engineers Associations (NCSEA), commented that ''[l]ocation of services and equipment are often not finalized until erection of the steel frame is well underway, or perhaps even complete.'' Another commenter (Ex. 13–64) responded that ''[t]he welded detail allows for joist spacing to be revised to suit mechanical coordination up until installation. In today's fast track projects, this flexibility is demanded.'' The SJI, in a post hearing comment (Ex. 66) added that:

> [t]he most pernicious cost-factor will be the interruption of scheduled work in the fabricator shop to await the final positioning of heating, air conditioning and other mechanical equipment. [further] * * * the design, fabrication and manufacture of structural steel and steel joists is on a just-in-time basis. To hold everything in abeyance until the mechanical equipment is decided upon, purchased and available will frustrate the whole construction sequence and drive up the carrying costs of steel construction.

In addition, commenters raised several general feasibility concerns about the hole requirement in paragraph (a)(8). They stated that it would be difficult to line the holes up (Ex. 13–233), the reality of construction would not allow the procedure to be effective (Ex. 13–278), and since that the joist manufacturer and steel fabricator are most often separate businesses, the coordination of precise hole locations would not be easy (Ex. 13–226). The American Institute of Steel Construction (AISC) (Ex. 13–209) addressed the coordination concern by stating:

> [t]o allow for bolting on every job, the fabricator and the joist manufacturer must know the exact joist spacing to prepare shop drawings of the individual members for approval and fabrication. This presents a severe logistical problem since contractors commonly purchase steel well in advance of the building's mechanical system * * * [s]afe, existing practice allows the fabricator to order joists and mill steel (long lead-time items) prior to finalization of all other elements of the project design. The proposed requirement would not allow for field adjustment of the joists if exact hole location is required. In addition, if the final location of the joists is not known during the fabrication, how will the fabricator know where to put the holes and if the location changes, as it often does, there is no means to move the holes? In addition, field adjustability is not possible with bolted hole connections causing problems for mechanical equipment of which the location may not be known prior to fabrication.

OSHA agrees that there is a need to allow for situations where field adjustment is needed. Paragraph (a)(8)(ii) of the final rule allows for immediate welding of the joist and also for movement of the joist where constructibility does not allow for bolting. In these instances, where a joist would need to be moved to allow for the placement of mechanical equipment or if the joist location had to change after fabrication and prior to erection, a weld would be permitted to secure the joist if it is necessary for the joist to be positioned such that the holes cannot be used. In addition, as stated in the preamble to the proposed rule, the Agency hopes this will create better pre-job communication between the fabricator and erector. Furthermore, OSHA notes that all solid-web member construction requires precise hole alignment. Therefore, the Agency feels that if solid web structural steel can be fabricated with precise hole alignment for multi-story sky scrapers, sports stadiums and other large structures, then the same can be done for open web steel joist structures.

Another concern was that the proposed provision would unnecessarily increase the hazards to fabrication workers to put the holes in the members. Vulcraft (Ex. 13–289) stated:

> * * * the cost to people ordering these products will increase due to the additional, unnecessary fabrication requirements, this will increase the safety and health risk of the fabrication workers and this risk is much greater than the non-risk of welding the ends of joists in the field.''

Another commenter (Ex. 13–25) stated ''[f]abricators will drill millions of holes for no reason; [there is] no justification for exposing shop fabricators to additional hazards.'' Several commenters (Exs. 13–41, 13–234, 13–290, 13–165, 13–14, 13–144, 13–22, 13–42, 13–309, 13–226, 13–51 and 13–209) further suggested that the requirement would place additional burdens on the fabricator, primarily a cost burden. The American Institute of Steel Construction (AISC) (Ex. 13–209) stated that the requirement ''* * * imposes tremendous economic, manufacturing, scheduling, detailing and other burdens on both the structural steel fabricator and the steel joist manufacturer to install bolt holes to accommodate an erection method that will be merely optional.'' Another commenter (Ex. 13–42) stated ''* * * the passing of this final rule would, in some cases[,] probably double the cost of detailing beams that would support bolted connections for joists 40 feet or [over].''

Another concern of the fabrication industry involved small fabricators and their inability to compete with the larger fabricators to drill or punch holes in the members. One commenter (Ex. 13–22), referring to the proposed provision, stated ''[t]his would put an unnecessary, and unfair burden on small fabricators who do not have computerized drilling and/or punching lines by greatly increasing the cost of labor.'' Another commenter (Ex. 13–12) again referring to proposed paragraph (a)(8), stated that if the rule were adopted, he would be forced to close his business. Because he has a small shop and all holes are drilled by hand, he said that he would not be able to compete with larger shops that have automated equipment.

The Agency believes that paragraph (a)(8) will increase safety for those workers installing larger joists. The record does not demonstrate that the provision will increase exposure to hazards in the fabrication industry. In addition, since the final rule requires that the holes be used for erection of the

joists, the fabricator will not be needlessly drilling the holes.

Finally, many commenters suggested that the proposed requirement would increase the cost of joist erection without increasing employee safety. Without any identified increase in safety, many commenters felt that the increase in costs to the steel joist industry and the structural steel fabrication industry is unjustified. One commenter (Ex. 13–252) noted ''* * * adding 10 to 15 percent for additional labor and materials will only serve to push these jobs out of the reach of many small businesses.'' Additionally, SJI in a post hearing comment (Ex. 66) presented an economic analysis of the impact of this proposal on the steel joist industry that showed a first year cost of $68,000,000 for this provision. They also noted that structural steel fabricators anticipate an increase in cost of $126 per ton if the proposed regulation is implemented. That amounts to an increase cost for fabricated structural steel of $184.8 million, above the costs to the joist industry. Another commenter (Ex. 13–342) responded ''the cost of steel projects will increase significantly with little, if any, advantage in job site safety. Cost increases will result because of the joist girder top chord or beam top flange will have to be increased in size and holes will have to be punched in every joist seat. Erection cost increases will also result in making the final connection.''

One commenter (Ex. 13–57) responded that their company has never had a worker injured during the process of welding joist ends to structural steel beams, and that the proposed change to paragraph (a)(8) would neither improve safety nor stability, might require increased beam sizes and might create a tripping hazard. Another commenter (Ex. 13–89) stated that the proposed paragraph would not provide any safety benefit and could increase accidents due to the efforts to bolt the ends of non-rigid joists which would require a difficult balancing act to perform. Other commenters expressed concern that proposed paragraph (a)(8) could be detrimental to the steel joist industry. Specifically, the added costs for engineering, coordination, fabrication and erection will make this type of construction non-competitive.

As indicated above, paragraph (a)(8) only applies to long and limber joists (40 feet or more in length) to ensure that at the critical time of initial connection, the employee is not exposed to a hazard as a result of the joist not being adequately secured upon its placement. The Agency believes that the costs (addressed in the economic analysis) of this provision will be accompanied by an significant increase in safety. In addition, as was discussed earlier, there may be a cost savings in erection time by performing the bolted connection. SENRAC member Alan Simmons of the Ironworkers International Union, and an ironworker with much field experience, stated at the hearing (Ex. 208X, p. 189), ''It takes considerably less time to bolt than to weld a joist in my opinion.'' In addition, Mike Cushing, an ironworker for 29 years, described in testimony (Ex. 208X; p. 377) how bolting is easier, faster and safer than welding. ''With welding, there is no right spot, you have to pull a tape, get drums out and determine the exact location of the joist to weld it. With holes, you just stick the bolt in the hole just like any other piece of iron.'' He goes on to state that ''* * * welding is not a very long process, but laying it [the connection point of the joists] out, it probably will take longer than to do the actual welding.'' Also, Steve Rank (Ex. 208X; p. 204), a SENRAC member and an ironworker with much field experience, stated that these long joists pose a displacement hazard as well as a hazard to the ironworkers that are stepping onto and dragging welding weight over them. He states that alignment is a serious issue, and that such long joists can pop the welds and lead to accidents during erection.

In summary, most of the concerns expressed about the proposed requirements for the holes for bolting long steel joists are eliminated by final § 1926.757(a)(8) which does not just require that holes be provided for field bolting: it also requires that initial connections be field bolted instead of welded. In addition, many of the remaining concerns are eliminated by the constructibility exceptions.

In the proposed rule, OSHA justified the need for the holes in the joists for the following reasons: (1) The provision is necessary because certain joists that are thin and flexible can be difficult to install because of their sweep. Bolting these types of joists first allows straightening of the joist, thus returning its camber and eliminating torque. Additionally, after bolting, welding can be more easily accomplished. (2) Long steel joists that are placed in bays of 40 feet or more have a greater tendency to twist or rotate, which creates hazards for the workers installing them. (3) Bolting is safer whenever unattached joists could be displaced by wind or construction activity, by the movement of employees, by trailing welding leads, by accidental impact against the supporting structure by a crane or other equipment, or by harmonic motion or vibration. (4) The vision and balance of an employee working at elevation can be impaired while wearing a welding hood, which may make bolting a safer approach in this situation. (5) Joists can roll and pop welds due to the movement of an worker on the joist or the stresses caused by removing the sweep; if the weld breaks, the joist fails and may cause a structural collapse.

The Agency believes that a bolted erection connection in joists in bays of 40 feet or more will reduce the risk of an employee fall or collapse that can result when a long, unstable steel joist breaks loose from its attachment. Slotted holes for bolting will provide easier plumbing-up and alignment before the final rigid attachment is completed. Sweep can be taken out and the bridging installed without fear that the seat will break off. When asked for his sense of the cost savings to a steel erector, Mr. Cordova, who has used bolted connections in steel joists, stated (Ex. 208X; p. 211):

> I think it is a significant saving in that they can protect their workers by minimizing the exposure of the worker out there on the structure that's unstable. If you have a bolted slotted connection, you can stabilize the structure.

Bolted connections help protect employees from falling. Barry Cole of Miller Safety (Ex. 208X; p. 252) stated: ''Whenever we can give a guy a better grip, a better handling, or a better way mechanically with some certainty and some instantaneous versus long, drawn out, [sic] then you're better off.'' Mr. Cole went on to describe bolted connections as a type of fall protection ''[b]ecause they reduce exposure to a loss of balance * * *'' In the Summary of the Final Economic and Regulatory Flexibility Analysis (Section V), below, OSHA addresses the issue of cost impact to steel joist fabricators.

SENRAC determined, and OSHA concurs, that bolting of longer joists for their initial connection will provide additional stability during this unstable erection period.

Paragraph (a)(9) of the final rule (proposed paragraph (a)(10)) prohibits the use of steel joists and steel joist girders as anchorage points for a fall arrest system unless written direction allowing such use is obtained from a qualified person. Although performance criteria and manufacturer's specifications are not currently available regarding the adequacy of steel joists and steel joist girders as anchorages for fall protection systems, this provision recognizes that some joists and girders may be strong enough to meet the load

requirements for anchorages in § 1926.760. One commenter (Ex. 13–210) suggested that the structural engineer of record should be the one to provide the approval. OSHA believes the SER may not have the knowledge of steel joist erection necessary to approve tie-off to joists. The qualified person, however, as defined is the appropriate entity to make the determination.

Paragraph (a)(10) of the final rule (proposed paragraph (a)(9)) addresses the hazard posed by bridging joists without establishing an adequate terminus point for the bridging. Bridging is not effective until a terminus point is created. ''Bridging,'' an operation integral to steel joist construction, refers to the steel elements that are attached between the joists (from joist to joist) to provide stability. ''Erection bridging'' is defined as ''* * * the bolted diagonal bridging that is required to be installed prior to releasing the hoisting cables from the steel joists.'' ''Horizontal bridging,'' usually angle iron, is attached between steel joists, to the top and bottom chords of each joist, by welding. There are several provisions in this section that require bridging to be anchored. This means, by definition, that the steel joist bridging must be connected to a bridging terminus point. The term, ''bridging terminus point,'' is defined as follows:

> Bridging terminus point means a wall, beam, tandem joists (with all bridging installed and a horizontal truss in the plane of the top chord) or other element at an end or intermediate point(s) of a line of bridging that provides an anchor point for the steel joist bridging.

Final rule paragraph (a)(10) simply requires that a terminus point be established prior to installing the bridging in order for the bridging to be anchored. OSHA is aware that steel erection is a progressive process that requires one piece to be erected before the subsequent piece can be attached to it. This provision requires pre-planning to determine the particular location of the terminus point for the attachment of bridging. To assist in developing or determining terminus points, OSHA is providing illustrative drawings of examples of bridging terminus points in non-mandatory Appendix C. In addition, paragraph (c)(5) of this section, discussed below, deals with the situation in an erection sequence where the permanent bridging terminus points are not yet in existence at the time the joists and bridging are erected. This provision remains the same as the proposed rule and no comments were received on this paragraph.

Paragraph (b) Attachment of Steel Joists and Joist Girders

There are three types of joists identified by SJI as being used in the steel erection industry. The K-Series open web steel joists, having joist depths from 8 inches through 30 inches, are primarily used to provide structural support for floors and roofs of buildings. Although light in weight, they possess a high strength to weight ratio (Ex. 9–141). The LH-Series steel joists span up to and including 96 feet. These joists are used for the direct support of floor or roof slabs or decks between walls, beams, and main structural members, and their depths range from 18 inches to 48 inches. The ''Deep Longspan,'' or DLH-Series joists can run up to 144 feet and have depths from 52 inches through 72 inches. The attachment of all three series of joists is addressed in paragraph (b) of this section. The hazard addressed in this paragraph is the adequacy of the attachment of joists that could affect the stability of the joist and thus the safety of the employee erecting the joist. Paragraphs (b)(1) and (b)(2) specify the minimum attachment specifications for the lighter and the heavier joists, respectively. At a minimum, the K-Series must be attached with either two ⅛″ (3 mm) fillet welds 1 inch (25 mm) long, or with two ½″ (13 mm) bolts. In addition, the provision provides alternative performance language ''or the equivalent'' to allow for attachment by any another means that provides at least equivalent connection strength. Similarly, at a minimum, the LH-Series and DLH-Series must be attached with either two ¼″ (6 mm) fillet welds 2 inches (51 mm) long, or with two ¾″ (19 mm) bolts. Again, OSHA is providing performance language, ''or the equivalent,'' for the reasons discussed above. Paragraphs (b)(1) and (b)(2) were adopted from SJI specifications. One commenter (Ex. 13–208 commented on these paragraphs in support stating that these provisions have ''* * * been adopted from the Steel Joist Institute Specifications and emphasize the need for positive attachment of joists to [their] supporting elements.'' Final paragraphs (b)(1) and (b)(2) remain unchanged from the proposed rule.

Paragraph (b)(3) of the final rule addresses the hazards associated with the following improper erection sequence: landing joists on the support structure; spreading them out unattached to their final position; and then attaching them. This procedure creates the potential for worker injury because joists handled in this manner may fall or the structure may collapse. To eliminate these hazards, this paragraph requires, with one exception discussed in paragraph (b)(4) below, that each steel joist be attached, at least at one end on both sides of the seat, immediately upon placement in its final erection position, before any additional joists are placed. The language, ''both sides of the seat'', is added in the final rule to clarify what OSHA means by attachment. One comment was received on this provision (Ex. 13–208). It supported the requirement, stating that ''[t]his is a good provision that establishes the need to secure joists as they are placed thus preventing inadvertent displacement.''

Paragraph (b)(4) is an exception to the paragraph (b)(3) ''attachment upon final placement'' requirement. It addresses the situation where steel joists have been pre-assembled into panels prior to placement on the support structure. One commenter (Ex. 13–308) stated that in applying the proposed provision, one might confuse the corners of the panels with the steel joists creating the panels. The Agency agrees that the proposed language could cause confusion, and that we need to clarify that it is the corners of the panel that must be attached to the structure. Final rule paragraph (b)(4) has been re-worded to require that panels that have been pre-assembled from steel joists with bridging must be attached to the structure at each corner before the hoisting cables are released.

Pre-assembly of panels usually involves the installation of diagonal and horizontal bridging to form a platform at ground level, which eliminates fall hazards associated with attaching bridging at elevated work stations. Placing joists on the support structure in this manner eliminates the single joist instability concerns. Furthermore, because of the inherent stability of these pre-assembled panels, this paragraph requires only that the four corners of the panel be attached to the support structure before releasing the hoisting cables. The attachment can be either bolted or welded.

An additional benefit of panelizing joists is that, following installation on the primary support structure, in all likelihood, the panel will immediately provide anchorage points for fall protection systems.

Additionally, the pre-assembly allows for alternative joist erection methods such as a hybrid form of steel erection involving steel/wood-panelized roof structures, where wooden decking (dimensional wood and plywood) is attached to a single steel joist and the resulting panels are set on the support structure (Exs. 9–94, 9–95). Again, by placing joists on the support structure in

this manner, the instability concerns and other hazards associated with attaching single joists are avoided. The same commenter (Ex. 13–208) supported this provision by stating ''[t]his is a strong provision that extends the requirement for attachment even in instances when the erector chooses to panelize joists for erection.''

Paragraph (c) Erection of steel joists. Paragraph (c)(1) of the final rule requires that for joists that require bridging as provided in Tables A and B, at least one end of each steel joist must be attached on both sides of the seat to the support structure before the hoisting cables can be released. This paragraph is nearly identical to the proposed paragraph (c)(1) except that it was clarified by adding ''on both sides of the seat'' so that it is understood that two attachments are required at the one end of the joist. Thus, an end attachment is considered to be attachment of both sides of the joist seat. This change is consistent with the change in paragraph (b)(3) above. For further clarification, to address an oversight in the proposed standard and to conform with SJI specifications, this provision has been limited to the joists that require bridging as identified in Table A or B. This clarification will allow smaller lighter joists (that do not require bridging and can be landed in bundles) to be placed on the structure and spread out by hand. Once the joists have been placed in their final position, however, they must be attached in accordance with paragraph (b)(3) of this section.

The Agency also determined that paragraph (c) did not properly address the erection of heavy joists over 60 feet. Therefore, final rule paragraph (c)(2) has been added to address the special erection needs of these long heavy joists to conform with SJI specifications. This paragraph will require that the seat on both ends of the joist be attached permanently and the bridging requirements of paragraph (d) met before hoisting cables can be released. The SJI (Ex. 13–208) commented that it is necessary to require that the joists be secured at least at one end prior to allowing workers on the joists.

Paragraph (c)(3) of the final rule (proposed paragraph (c)(2)) addresses steel joists that do not require erection bridging as required by Tables A and B. This paragraph has been revised to eliminate the reference to joists that span 40 feet or less. This was done to be consistent with paragraph (d) of this section as discussed below.

In the last 25 years, many new and different open web steel joists have been manufactured. In developing Tables A and B, SJI demonstrated that there are dozens of joists that span less than 40 feet that require erection bridging to maintain stability during erection. SJI also demonstrated that there are joists over 40 feet that do not need such bridging. The Agency has accepted these findings and is following SJI recommendations with respect to which joists need erection bridging. SJI (Ex. 13–208) commented in support of the provision allowing only one worker on the joists that do not need bridging ''* * * prior to the joist being secured and the bridging being installed and anchored.''

Based on the recognition of the inherent danger of employees working on unstable joists, paragraph (c)(4) of the final rule (proposed paragraph (c)(3)) requires that no employee be allowed on steel joists, where the span is equal to or greater than the span shown in Table A or B, unless the requirements of paragraph (d) of this section are met. This paragraph has also been modified in the final rule as a result of the changes to paragraph (d). Since the 40 foot minimum length has been eliminated, this paragraph now prohibits workers from going out on any joist that is equal to or longer than the span specified for that joist in Table A or B unless the bridging provisions of paragraph (d) of this section are met. The SJI (Ex. 13–208) commented in support of this requirement.

Paragraph (c)(5) of the final rule (proposed paragraph (c)(4)) addresses the situation where the erection sequence calls for joists to be erected before the permanent bridging terminus points have been established. This situation commonly occurs in a single story structure that has masonry or architectural precast walls installed after the steel is partially or fully erected. Complying with paragraph (c)(5) will involve pre-planning and the addition of temporary bridging terminus points to provide stability and prevent structure collapse in this situation. Examples of bridging terminus points can be found in Appendix C. SJI (Ex. 13–208) commented in support of this provision by stating ''[t]his provision recognizes situations when it is simply not possible to terminate or anchor bridging utilizing standard procedures. In those situations it is imperative that provisions be made to provide the necessary stability.''

Paragraph (d) Erection Bridging

Paragraph (d) of the final rule provides that, where the span of the steel joist is equal to or greater than the span shown in Tables A and B, a row of bolted diagonal erection bridging must be installed near the midspan of the joist, the bolted diagonal erection bridging must be installed and anchored before the hoisting cables can be released, and no more than one employee is allowed on the joist until all other bridging (diagonal and horizontal bridging) is installed and anchored.

Final rule paragraph (d) has been revised from the proposed rule by eliminating the requirement that all joists in bays of 40 through 60 feet (in addition to those equal to or greater to the spans in Table A and B) have bridging. Under the final rule, the requirements of paragraph (d)(1) apply only to the joists identified in the Tables as needing bridging.

Under the current standard, joists less than 40 feet long do not require bridging, but all joists 40 feet and over do. The proposed rule was somewhat different. Like the current standard, bridging would have been required when erecting any joist 40 feet or longer. Unlike the current standard, however, bridging would also have been required when erecting those joists less than 40 feet long that are identified in Tables A or B as requiring that procedure.

Tables A and B rate the stability (when unbraced) of a wide range of joists—including joists 40 feet and over. According to the Tables, a number of steel joists over 40 foot are stable without bridging. Nonetheless, the proposed rule would have required bridging for all joists over 40 feet in length.

Tables A and B were developed for the proposed rule and were based on the SJI tables. The SJI tables were developed in 1994 and designed to rate the capacity of joists with respect to a uniform dead load (an unmoving weight resting on the joist) and live loading (for example, a person walking on a completed roof). SJI developed the tables to determine which joists could support, without bridging, a static 300 pound load placed on the top cord at the mid-span of the joist.

SJI retained a consultant to develop and check their tables for a single point loading in the center of the joists. The consultant first developed a theoretical equation to evaluate the joists, and rated the joists. The joists were then field tested for a stationary point loading. The testing corroborated the theoretical ratings. SJI provided this information to SENRAC and the information was used in the development of Tables A and B in the proposal. The Tables relate the attachment and bridging requirements to the actual performance of particular joists.

SENRAC decided to use the portion of the tables that identified the need for

bridging of joists less than 40 feet in the proposed rule. The proposal required bridging for all joists over 40 feet, although the SJI tables indicated that certain joists with spans from 40 to 60 feet do not require erection bridging. SENRAC based its decision on the following: (1) OSHA's current steel erection standard requires all joists over 40 feet to be braced, and (2) the SJI tables are not reliable because the loads imposed during the SJI tests were static loads; the loads imposed by an employee are dynamic.

There were a number of commenters that objected to the failure of the proposal to use the Steel Joist Institute (SJI) Tables in their entirety. The Steel Erectors Association of America (SEAA) (Ex. 13–203) stated that it could not understand why only half of SJI's stabilization tables was used. In its view, if the testing is valid the testing should be accepted in its entirety or not used at all.

Another commenter, Mr. Eddie Williams (Ex. 203X; p. 171), testified that 40 feet is not necessarily an appropriate threshold for the requirement—there may be joists that are 30 feet that need a row of x-bridging in the center while others are stable well over 40 feet without bridging. Speaking as an erector, he believes that it is acceptable to rely on the SJI tables above 40 feet. Mr. Cary Andrews (Ex. 204X; p. 133) and Mr. Studebaker (Ex. 204X; p. 33) in similar statements said that 40 feet should not be a threshold. They stated that the requirement for bolted x-bridging should be based on the stability of the particular joist.

SJI (Ex. 13–208) stated that it strongly objects to the imposition of the 40 foot rule for erection bridging. It reports that extensive SJI research has proven that many joists over 40 feet exhibit a sufficient degree of stiffness to allow for safe erection without erection bridging. SJI submitted the tables based on their research. In SJI's view, the choice of a 40-foot span as the point at which erection bridging must be used is arbitrary.

A commenter, (Ex. 201X; p. 79 and Ex. 13–334), questioned the Agency's authority to regulate the design of structures. They believe that this is a matter that should not be regulated. Another commenter, Mr. Emile Troup, from the National Council of Structural Association (Ex. 13–308), said that: (1) joists listed in Tables A and B are susceptible to instability without external support; and (2) proposed rule paragraphs 1926.757(c) and (d) are cumbersome. Mr. Troup believes that the paragraphs should be simplified to make it easier for structural engineers, joist manufacturers and erectors to understand the requirements. Mr. Studebaker, (Ex. 204X; p. 141) challenged the reliability of the SENRAC tables. The results reflected in the tables are based on static load testing. He argues that this is improper since the loads actually imposed during erection are dynamic loads, such as when an ironworker leans to install bridging. Ironworkers move across the joist and move back off of it and try to balance and stabilize themselves. In his view, the 300 pounds is a safe limit but it could be increased sightly.

In support of the proposal, Mr. Lott (Ex. 204X; p. 100) said that the lack of bridging could cause buckling failure. As the ironworker moves toward the center, the compressive force in the top chord is increased. If there is a failure, the member will fail in compression. Mr. Williams (Ex. 204X; p. 95) supported requiring bridging in joists over 40 feet.

As discussed earlier, OSHA believes that it is as necessary and appropriate at times to require building components to meet the safety needs of those constructing a building as it is to require a completed structure to meet the safety needs of its occupants. A well established principle of occupational safety and health is that eliminating or reducing a hazard by modifying the design of whatever is posing the hazard is preferable to relying exclusively on controlling a hazard through personal protective equipment.

An open web joist is light and has a high degree of strength along one axis—its height. In other words, once in place, it can resist loads placed along its top edge. However, the joist is extremely weak along the secondary axis—for a truss in place, this means that it has little capacity to resist a force pressing against the (wide) side of the truss. In its 1994 presentation before SENRAC, SJI addressed the research on stability that it used to develop its tables was addressed. The research showed that many joists over 40 feet exhibit sufficient stiffness for safe erection without erection bridging.

In response to the concern that the dead loading tests were insufficient, the Agency's engineers evaluated the tests and methodology used to develop the tables. The Agency's engineers estimate that for a 200 pound worker with 50 pounds of equipment, an additional 50 pounds of live loading will provide a safety factor of 1.2. In their opinion a test with a larger static loading is not needed and this is an appropriate safety factor for this type of situation. Consequently, the Agency believes that the SJI tables that were originally submitted by SJI are reasonable. SJI's research demonstrated that the joists over 40 feet identified in the Table as not needing erection bridging during erection are sufficiently stable. In addition, the record lacks evidence showing that the tables are unreliable. In sum, the record does not show a basis for cutting off the SJI Tables at 40 feet. OSHA has therefore incorporated the SJI tables in their entirety in the final rule and modified the proposal's provisions accordingly.

Paragraph (d)(1)(i) of the final rule requires that bolted diagonal erection bridging be installed near the midspan of the joist. In the proposed rule, the provision stated simply that this row of erection bridging had to be bolted diagonal bridging, but there was no requirement to install the bridging. This provision was clarified in the final rule by requiring that the bolted diagonal erection bridging be installed near the midpoint of the joist.

Paragraph (d)(1)(ii) prohibits releasing the hoisting cables until the bolted diagonal erection bridging is installed and anchored. As proposed, the provision did not require the bridging to be anchored. One commenter (Ex.13–208) suggested that the wording ''and anchored'' be added because bridging does not perform its function unless it is anchored. He pointed out that paragraph (a)(9) of this section requires that a bridging terminus point be established before bridging is installed (it refers to Appendix C, which provides examples of bridging terminus points). That suggests that, in the proposal, the intent was for the bridging to be anchored.

OSHA agrees that, to be effective, the bridging must be anchored, and has added this anchoring requirement to clarify that in order to comply with this paragraph and paragraph (a)(9) of this section, the bridging must be anchored.

Paragraph (d)(1)(iii) prohibits more than one employee from being on the joist until all the bridging is installed. This provision will require that all bridging that is required for the joist (both bolted diagonal and horizontal bridging) be installed before additional employees are allowed on the joist. No comments were received on this provision, and it is promulgated without change.

Paragraph (d)(2) addresses the bridging requirements for steel joists over 60 feet through 100 feet. Paragraph (d)(2)(i) has been added to the final rule. It requires that all rows of bridging for these spans be bolted diagonal bridging. This provision was added in response to a comment from SJI (Ex. 13–208) in which they stated that for these longer

joists, bolted diagonal bridging provides necessary stability for the joist. The Agency's addition of this requirement reflects the current best practice in the industry.

Paragraph (d)(2)(ii) of the final rule requires that two rows of bolted diagonal erection bridging be installed at the third points of the joists that span 60 through 100 feet in length. An explicit requirement that the bridging be installed has been added, as explained above with respect to paragraph (d)(1)(i).

Paragraph (d)(2)(iii) of the final rule (proposed paragraph (d)(2)(ii)) prohibits the hoisting cables from being released until these two rows of erection bridging are installed and anchored. The phrase ''and anchored'' was added for the reasons discussed with respect to paragraph (d)(1)(ii) above.

Paragraph (d)(2)(iv) of the final rule (proposed paragraph (d)(2)(iii)) requires that no more than two employees be allowed on a span until all other bridging is installed and anchored. The phrase ''and anchored'' has been added for the reasons discussed with respect to paragraph (d)(1)(ii) above. This paragraph provides that all the bolted diagonal bridging that is required for the joist must be installed and anchored (to a bridging terminus point) before more than two employees are allowed on the joist.

Paragraph (d)(3) applies to steel joists where the span is between 100 feet through 144 feet. Paragraph (d)(3)(i) requires bolted diagonal bridging for all rows of bridging. The Agency received no comments on this provision and it is unchanged in the final rule. Paragraph (d)(3)(ii) prohibits the hoisting cables to be released until all bridging is installed and anchored. There were no specific comments on the proposed provision. However, as explained above, the words ''and anchored'' have been added for consistency.

Paragraph (d)(3)(iii) restricts access to no more than two employees until all bridging is installed and anchored. There were no specific comments on this provision. However, the words ''and anchored'' have been added as explained above.

Paragraph (d)(4) applies to steel members spanning over 144 feet and requires that erection of these members be in accordance with § 1926.756. The Agency received no comment on this provision and it is unchanged in the final rule.

Paragraph (d)(5) requires the installation of bridging before the release of hoisting cables on any steel joist specified in paragraphs (c)(2), (d)(1), (d)(2) and (d)(3). There were no specific comments on this provision. However, as explained above, the words ''and anchored'' have been added. The final rule paragraph requires that where any steel joist in paragraphs (c)(2) and (d)(1), (d)(2) and (d)(3) of this section is a bottom chord bearing joist, a row of bolted diagonal bridging shall be provided near the support(s). This bridging shall be installed and anchored before the hoisting cable(s) is released.

Paragraph (d)(6) specifies that when bolted diagonal erection bridging is required by this section, the erection drawings must indicate the bridging and the erection drawings shall be the exclusive indicator of the proper bridging placement. This is to eliminate any confusion that might arise where bridging placement is specified through other means; reliance is to be placed only on the erection drawings for this information. In addition, shop-installed bridging clips or functional equivalents must be provided where bridging bolts to the steel joists. Paragraph (d)(6) also requires that when a common bolt and nut attach two pieces of bridging to a steel joist, the nut that secures the first piece of bridging may not be removed from the bolt for the attachment of the second piece. In addition, when bolted diagonal erection bridging is required, bridging attachments may not protrude above the top chord of the steel joist. No comments on paragraph (d)(6) were received and it is promulgated as proposed.

Paragraph (e) Landing and Placing Loads

The work practice provisions found in § 1926.754(e) regarding the hoisting, landing and placing of deck bundles, in general, have already been discussed above. This paragraph (e) of § 1926.757 also addresses the hazards of landing and placing loads on steel joists. As discussed earlier, the proposed term ''decking;'' has been changed to ''metal decking'' in the final rule. This definition clarifies that paragraphs (e)(1) through (e)(5) apply to all activities associated with metal decking that is used as a support element for either a floor or roof system.

Paragraph (e)(1) applies to any employer who places a load on steel joists during steel erection. This paragraph requires that the load is adequately distributed so that the carrying capacity of any steel joist is not exceeded. After this general requirement is met, the employer must meet the specific conditions set forth in the remainder of § 1926.757(e).

The Agency received no comment on this provision, and therefore, promulgates this requirement as proposed.

Paragraph (e)(2) prohibits placement of any construction loads on steel joists until all bridging is installed and anchored and all joist bearing ends are attached in accordance with § 1926.757(b). As defined in the final rule, a construction load means any load other than the weight of the employee(s), the joists and the bridging bundle. Although bundles of decking constitute a construction load under this definition, under certain conditions decking can be placed safely on the steel joists before all the bridging is installed and anchored. These conditions form the basis for the exceptions in paragraph (e)(4) of this section.

The Agency received no comment on this provision, and therefore, promulgates this requirement as proposed.

Paragraph (e)(3) provides requirements for safe and stable placement of bridging bundles on steel joists. A bridging bundle is not considered a ''construction load.'' The weight of the bridging bundle is limited to 1,000 pounds because bridging will be placed on the joists before they have been fully stabilized. To ensure safe placement, this paragraph requires that the bundle of joist bridging be placed over a minimum of 3 steel joists that are secured at one end. Also, to ensure stability of the load, this provision requires that the edge of the bridging bundle be positioned within 1 foot of the secured end (some clearance is necessary for material handling purposes and to provide employee access to the steel joist's attachment point).

The Agency received no comments on this provision, and therefore, promulgates this requirement as proposed.

Paragraph (e)(4) sets forth special conditions which must be met before an employer is permitted to place a bundle of decking on steel joists that do not yet have all bridging installed. This paragraph applies only to bundles of decking and not to other construction loads. All six conditions must be met before the exception to the provisions of § 1926.757(e)(2) applies.

Paragraph (e)(4)(i) requires employers to determine, based on information from a qualified person, that the structure or portion of the structure is capable of safely supporting the load of decking. This determination must be documented in a site-specific erection plan which is made available at the construction site.

Paragraph (e)(4)(ii) requires that the bundle of metal decking be placed over

a minimum of three joists to distribute the load.

Paragraph (e)(4)(iii) requires that the three steel joists supporting the bundle of metal decking have both ends attached to the support structure. The attachments must meet the requirements prescribed in § 1926.757(b).

Paragraph (e)(4)(iv) requires at least one row of bridging be attached and anchored to the three joists specified in § 1926.757(e)(4)(iii). The qualified person determines the type of bridging, erection bridging or horizontal bridging, needed to satisfy this requirement.

Paragraph (e)(4)(v) limits the weight of the bundle of metal decking to 4,000 pounds (1816 kg).

Paragraph (e)(4)(vi) requires that the edge of the bundle of metal decking be placed within a foot (0.30 m) of the bearing surface of the joist.

In the proposed rule, this paragraph stated that, ''The edge of the bundle of decking is placed within 1 foot (.30m) of the bearing surface of the joist end.'' One commenter (Ex. 13–208) requested that it be revised to reference § 1926.757(e)(5) since both requirements are the same. The Agency agrees that the requirements are identical and has revised the provision accordingly for consistency.

Paragraph (e)(5) specifies the location for safe placement of all construction loads, not just metal decking, by requiring that the edge of the construction load be positioned within 1 foot of the secured end of the steel joists in order to enhance the stability of the load (some clearance is necessary for material handling purposes and for access to the steel joist's attachment point to the support structure).

Section 1926.758 Systems-engineered metal buildings

During SENRAC's deliberations on the prerequisites for anchor bolts, beams, columns and open web steel joists, the Committee discussed many anomalies that appeared to be associated with systems-engineered metal buildings. The Committee was advised by the Metal Building Manufacturers Association (MBMA) that over 50 percent of industrial buildings in steel erection are systems-engineered. This type of building frequently has lighter, cold formed members such as girts, eave struts and purlins (see definitions). Larger members in this type of construction are called rigid frames, a term not used in conventional steel erection. There are a large number of small specialized steel erectors who exclusively perform systems-engineered metal building erection. In light of these considerations and in an effort to facilitate compliance with this subpart, SENRAC developed a separate section for systems-engineered metal buildings. OSHA proposed a separate section and continues this approach in the final rule.

This section sets forth requirements to erect systems-engineered metal buildings safely. Systems-engineered metal buildings are defined in the definition section of this proposal. Systems-engineered metal buildings include structures ranging from small sheds to larger structures such as warehouses, gymnasiums, churches, airplane hangers and arenas.

Systems-engineered metal buildings use different types of steel members and a different erection process than typical steel erection. Many contractors erect systems-engineered metal buildings exclusively. An overwhelming majority of these erectors are small employers (63 FR 43477). The erection of systems-engineered metal structures presents certain unique hazards that are not addressed specifically by OSHA's existing steel erection standard. Although some of the hazards are similar to general steel erection, other hazards, such as those associated with anchor bolts, construction loads and double connections, are different.

Most of the requirements in this section are similar to those in other sections of this document. Where a conflict arises between a provision in the systems-engineered metal building section and that of another section of subpart R, to the extent that the work being performed is systems-engineered metal building work, the more specific systems-engineered metal building section would apply. This section, however, must not be interpreted to mean that (apart from sections 1926.755 and 1926.757), the other provisions of subpart R do not apply to systems-engineered metal buildings where appropriate.

In the proposed rule, the title of this section was ''Pre-engineered metal buildings.'' During the public hearing, a representative of the Metal Building Manufacturers Association (MBMA) (Ex. 207X; pp. 246–247), advised SENRAC that the title of this section used an out-of-date term, and suggested that it be replaced with a more current term such as ''metal-building systems.'' MBMA's position was based on its view that ''buildings are predominately custom engineered for each application and are no longer selected from a catalog of standard designs.'' The Agency believes that MBMA's suggestion is valid. However, MBMA's suggested term ''metal-building systems'' could be too broadly interpreted and mistakenly applied to all buildings made entirely of metal instead of only to those which are engineered and supplied as a complete, integrated product. Therefore, OSHA believes that ''systems-engineered metal buildings'' better reflects that intent and has changed the title accordingly.

Paragraph (a) states that all of the requirements contained in subpart R apply to systems-engineered metal buildings except for §§ 1926.755 (Column Anchorage) and 1926.757 (Open Web Steel Joists). This paragraph has been revised from the proposed rule to clarify that § 1926.758 contains all anchor bolt and joist requirements that are specific to systems-engineered metal buildings.

Paragraph (b) requires all structural columns be anchored by at least four anchor bolts. One commenter expressed concern with this requirement and observed that different anchorage designs, including some with fewer bolts, could meet the safety intent of this paragraph (Ex. 13–153). It is conceivable that under certain conditions, other designs for anchorages could provide the stability needed for safe construction. However, it would be very difficult for those responsible for erecting the structures to know if, from and engineering standpoint, these other approaches would provide sufficient stability. OSHA has decided to defer to the expertise of the Committee, which found that a four-bolt system would be more effective and simpler to institute.

Another commenter supported the Agency's efforts to ensure column stability while questioning the Agency's authority to compel structural design specifications that will require engineering expertise (Ex.13–210). As noted earlier in the discussion of Column Anchorage (§ 1926 755) and Double Connections (§ 1926.756(c)), the Agency believes it is appropriate to prohibit the erection of structural members that lack key safety features.

Additionally, one commenter asked if this requirement would apply to all columns or just to those with structural significance (Ex. 13–173). As discussed in the Column Anchorage section, the Agency has added definitions for columns and posts. The intent of adding these definitions was to distinguish between columns that need to have four bolts and those that do not. Those definitions apply to this section as well. Only columns that fit the definition are required to have four anchor rods/bolts.

The requirement in paragraph (c) is unique to the erection of systems-engineered metal buildings because rigid frames are found only in this type of structure. This paragraph requires that rigid frames have 50 percent of

their bolts or the number of bolts specified by the manufacturer (whichever is greater) installed and tightened on both sides of the web adjacent to each flange before the hoisting equipment is released. Like final § 1926.756(a), this provision requires an adequate number of bolts to ensure stability before the hoist line is released. Rigid frames are fully continuous frames that provide the main structural support for a systems-engineered metal building. They provide the support that is typically provided by columns and beams in conventional steel erection. Due to design and load requirements, connections in rigid frames occupy a greater area and require more than two bolts upon initial connection. The remaining bolts are used to attach other members to the structure and provide stability against wind loading. To allow these connections to be bolted only with two bolts would not be adequate in many cases to prevent a collapse hazard. No comments were received on this paragraph and it is promulgated as proposed.

Paragraph (d) also pertains to stability and prohibits construction loads from being placed on any structural steel framework unless such framework has been safely bolted, welded or otherwise adequately secured. Without proper bolting or welding to provide stability, a construction load could cause a collapse of the structure. No commenter were received on paragraph (d) and it remains unchanged in the final rule.

For clarity, the regulatory text of proposed paragraphs (e)(1) and (e)(2) has been incorporated into a single paragraph (e) in the final rule. However, the paragraph is promulgated with the proposed requirements intact.

Paragraph (e) pertains to double connections in systems-engineered metal buildings. When girts or eave struts share common connection holes, a double connection hazard exists. As with § 1926.756(c), a seat or similar connection will prevent one member from becoming displaced during the double connection activity. In girt and eave strut to frame connections where girts or eave struts share common connection holes, paragraph (e) requires that at least one bolt with its wrench-tight nut remain in place for the connection of the first member unless a field-attached seat or similar connection device is present to secure the first member so that the girt or eave strut is always secured against displacement. In addition, paragraph (e) maintains that the seat or similar connection device must be provided by the manufacturer of the girt or eave strut so that it is designed properly for the intended use. Because this form of double connection is unique to systems-engineered metal building construction and might not be considered a double connection under a literal reading of § 1926.756(c), this provision specifically addresses girt and eave strut to frame connections.

Changes to proposed paragraph (e)(2) were suggested by two commenters (Ex. 13–153), one who recommended that ''the seat or similar connection that would normally be welded to the frame, * * * should be provided by the frame manufacturer * * *''. The other commenter (Exs. 43 and 207X) suggested that paragraph (e) be revised to reflect current steel erection methods in which the responsibility of installing temporary girt or eave supports is assigned to the erector. This suggestion also included a request to delete paragraph (e)(2).

Systems-engineered metal buildings are designed as an integrated product—each element is designed for the completed unit. In fact, MBMA (Ex. 207X) pointed out (in the context of what the title should be for the section) that almost all metal buildings are now ''custom engineered.'' Consequently, the designers of the building are particularly well situated to know where the double connections will be, the loads on the seats during assembly, and how to design the seats. In contrast, the erector does not normally have this type of design expertise and is not well situated to assess the type of seat or other connection device necessary for each particular double connection.

Paragraph (f) provides that both ends of all steel joists or cold formed joists shall be fully bolted and/or welded to the support structure before releasing the hoisting cables, allowing an employee on the joists, or allowing any construction loads on the joists. A commenter suggested that this paragraph be deleted because joists are addressed more thoroughly in § 1926.757 (Ex. 13–153). Two building trades representatives submitted similar comments expressing concern that paragraph (f)(1) was inconsistent with § 1926.756(a) and that the requirement for joist ends to be fully bolted or welded is excessive. (Exs. 13–210 and 13–222). SENRAC found that systems-engineered metal buildings are erected differently than other steel structures. These different construction methods were discussed in the preamble for the proposed rule (63 FR 43477). Systems-engineered metal buildings rely on these connections for stability and strength. These construction methods are essential to guard against collapse of systems-engineered metal buildings. Therefore, the Agency is deferring to SENRAC's expertise with respect to this difference and promulgates this paragraph unchanged.

Paragraph (g) prohibits the use of purlins and girts as anchorage points for a fall arrest system unless written approval to do so is obtained from a qualified person. Generally, purlins and girts are lightweight members designed to support the final structure. They may not have been designed to resist the force of a fall arrest system. If, however, a qualified person determines that the purlin or girt is of sufficient strength to support a fall arrest system, it may be used for that purpose. The qualified person would be required to provide written documentation of this determination. This requirement is identical to the one for steel joists in proposed § 1926.757(a)(9).

Paragraph (h) provides that purlins may only be used as a walking/working surface when installing safety systems, after all permanent bridging has been installed and fall protection is provided. Purlins are ''Z'' or ''C'' shaped lightweight members, generally less than ⅛″ thick, 2–4″ wide on the top and up to 40 feet long. They are not designed to be walked on and, because of their shape, are likely to roll over when used as a walking/working surface if not properly braced. One commenter (Ex. 43) suggested that the use of cold-formed joists as walking/working surfaces should be prohibited along with purlins in paragraph (h). OSHA has not included cold-formed joists in this paragraph because they provide greater stability than do purlins which are not designed to be used as walking/working surfaces without the addition of specific safety precautions.

Paragraph (i) addresses the placement of construction loads on systems-engineered metal buildings to prevent collapse due to improper loading of the structure. This paragraph requires that construction loads be placed within a zone that is not more than 8 feet (2.5 m) from the centerline of the primary support member. Unlike conventional decking, systems-engineered metal building decking bundles are lighter, and the sheets in the bundle are staggered. This staggering means that the bundles must be set so that the end of one bundle overlaps another bundle since the lengths of the sheets vary. The zone needs to be big enough to allow for the lapping while still having the support of the structure. An 8 foot (2.5 m) zone allows enough room to meet these objectives. No comments were received and the final remains as proposed.

Section 1926.759 Falling object protection

This section sets forth the requirements for providing employees with protection from falling objects. A real, everyday hazard posed to steel erection employees is loose items that have been placed aloft that can fall and strike employees working below.

Paragraph (a) requires that all materials, equipment, and tools that are not in use while aloft be secured against accidental displacement. The Agency received no comments on this section of the standard, and the provision is unchanged in the final rule.

The intent of paragraph (b) is that, when it is necessary to have work performed below on-going steel erection activities (other than hoisting), effective overhead protection must be provided to those workers to prevent injuries from falling objects. If this protection is not provided, work by other trades is not to be permitted below steel erection work. One way controlling contractors can reduce the hazards associated with falling objects is by scheduling work in such a way that employees are not exposed.

In the proposed rule, this section was titled, ''overhead protection.'' Most of the comments OSHA received on this section confused this provision with the requirements for protecting workers from falling objects associated with hoisting operations, which is addressed by § 1926.753(d). OSHA has changed the title of this paragraph to ''Protection from falling objects other than materials being hoisted'' so employers will not confuse the two provisions.

As proposed, § 1926.759(b) stated that, ''The controlling contractor shall ensure that no other construction processes take place below steel erection unless adequate overhead protection for the employees below is provided.'' Two commenters (Exs. 13–318 and 201X; p. 120) stated that the controlling contractor may not always be able to ensure that nobody is working under a steel erector. In other words, these commenters believe that the use of the word ''ensure'' would make the controlling contractor strictly liable—would have to guarantee—that no one worked below the steel erection activities. The use of the word ''ensure'' in this standard does not make the controlling contractor liable if it institutes reasonable measures to comply with the requirement. All defenses normally available to employers are equally available where a requirement is phrased using the term ''ensure.''

For a different reason, however, the Agency has rephrased the provision to read that the controlling contractor will ''bar'' other construction processes below steel erection. This change was made to more directly state that the employer must institute measures to keep employees out of the area below the steel erection activities.

Section 1926.760 Fall Protection

Paragraph (a) General Requirements

Paragraph (a) sets the fall protection threshold height for steel erection activities. Final paragraph (a)(1) requires that, with two exceptions, each employee covered by this rule who is on a walking/working surface with an unprotected side or edge more than 15 feet (4.6m) above a lower level must be protected by conventional fall protection (systems/devices that either physically prevent a worker from falling or arrest a worker's fall). One exception allows connectors to not use their personal fall protection to avoid hazards while working at heights between 15 and 30 feet. The other exception allows workers engaged in decking in a controlled decking zone to work without conventional fall protection at heights between 15 and 30 feet.

This is essentially the same as the proposed rule and SENRAC's recommendation. OSHA added a provision setting out the types of protection allowed. Protection must be provided by the use of guardrail systems, safety net systems, personal fall arrest systems, positioning devices systems or fall restraint systems. The Agency also re-worded the exception for connectors to clarify that they are permitted to not use their fall protection system where, in their sole discretion, they determine that is necessary to avoid a hazard.

Prior to enactment of this final rule, the fall protection requirements for steel erection were in three separate provisions. Depending on the structure and the type of fall exposure, one of the following applied: §§ 1926.750(b)(1)(ii), 1926.750(b)(2)(i) (both are in subpart R), or § 1926.105(a) (subpart E, Personal Protective and Life Saving Equipment). These provisions were the subject of considerable litigation, the product of which was the following: (1) In single story structures, § 1926.105(a) applied, which required fall protection at and above 25 feet for both fall hazards to the interior and exterior of the structure; (2) in multi-tiered buildings, § 1926.750 applied to fall hazards to the interior of the building. Several courts held that, under that standard, fall protection was required at and above 30 feet; (3) in multi-tiered buildings, § 1926.105(a) applied to fall hazards to the exterior of the building, which required fall protection at and above 25 feet. With the exception of § 1926.754(b)(3), the final rule eliminates distinctions between interior and exterior fall hazards and tiered versus untiered buildings for the fall protection trigger heights.

The fall protection rules for steel erection differ from the general fall protection rules in subpart M, which set six feet as the trigger height for fall protection. OSHA agrees with SENRAC that steel erection activities are different from most other construction activities. The different trigger height reflects these differences. OSHA also agrees with SENRAC that the former fall protection rules relating to steel erection are insufficiently protective and need to be strengthened.

In examining the issue of the threshold height for requiring conventional fall protection, SENRAC considered 29 CFR 1926 subpart M, the general fall protection standard for construction. In general, the subpart M trigger height for fall protection is six feet. SENRAC evaluated whether the trigger height in steel erection should be different than that in subpart M and concluded that it needed to be higher.

Steel erection differs from general construction in three major respects—the narrowness of the working surface, its location above, rather than below, the rest of the structure, and a minimum distance of approximately 15 feet to the next lower level. We explained the steel erection process in the proposal as follows (63 FR 43478–79):

> Initially, vertical members, referred to as columns, are anchored to the foundation. The columns are then connected with solid web beams or steel joists and joist girders to form an open bay. In a multi-story building, the columns are usually two stories high. These structural members are set by connectors in conjunction with a hoisting device (typically a crane). When the two-story columns are set in place, the connector installs the header beams at the first level, which forms the first bay. Each floor is typically 12.5 to 15 feet in height. After an exterior bay is formed (''boxing the bay''), the filler beams or joists are placed in the bay. The connector then ascends the column to the next level, where the exterior members are connected to form a bay, and so on. The floor or roof decking process basically consists of hoisting and landing of deck bundles and the placement and securing of the metal decking panels.

In short, a new, very narrow working surface is constantly being created as skeletal steel is erected at various heights. For many steel erectors, especially connectors, the work starts at the top level of the structure.

The special circumstances of steel erection can make conventional fall protection very difficult to deploy below 15 feet. For many steel erectors, especially connectors, the work starts at the top level of the structure. This means that anchor points above foot level are often limited or unavailable. Because of the nature of the structure, the available fall arrest distance is usually about 15 feet.

Thus, we noted in the proposal that fall equipment manufacturers appeared before the Committee and discussed the relationship between the fall distance when fall arrest systems are used and the trigger height for requiring fall protection (63 FR 43479). The location of anchor points, in conjunction with a number of other factors, will affect the fall arrest distance—the distance a worker will fall before the fall arrest system stops the fall. The fall arrest distance is the sum of the distance the worker falls before the fall arrest system begins to stop the fall, plus the additional distance that it takes for the system to slow and then finally stop the fall completely. Other factors that affect the fall arrest distance include the type of fall protection system used, the type of components and how the system is configured and anchored. The degree of mobility needed for the worker, location of available anchor points, and the need to limit the arresting forces on the worker's body also affect the choice of system and its installation.

Personal fall arrest systems commonly used by workers in full body harnesses often have one of the following: (1) Shock absorbing lanyard; (2) self-retracting lifeline; (3) rope grab with vertical lifeline; or (4) shock absorbing lanyard with rope grab and vertical lifeline. Fall arrest distances can vary with different types and lengths of lanyards. The distances can also vary in systems that permit the user to adjust the amount of slack.

The three common types of anchorage systems include: (1) Horizontally mobile and vertically rigid (such as a trolley connected to a flange of a structural beam); (2) horizontally fixed and vertically rigid (such as an eyebolt, choker or clamp connected to a structural beam, column or truss); and (3) horizontally mobile and vertically flexible (such as a horizontal lifeline suspended between two structural columns or between stanchions, which are attached to a structural beam and designed to support the lifeline). Eight feasible combinations of personal fall arrest systems and anchorage connectors were discussed (63 FR 43479). The total fall distance can differ significantly depending on how the system is configured. A system using an anchorage connector, harness and shock absorbing lanyard will have a total fall distance between 3 and 23 feet, while the total fall distance for a system using an anchorage connector, harness and self-retracting lifeline will measure between 4 and 10.5 feet. (Exs. 6–10 and 9–77-Tables 6 and 7). In 1995, one fall protection manufacturer indicated to SENRAC that the lowest point of the ironworker's body should be at least 12.5 feet above the nearest obstacle in the potential fall path when using a properly rigged, rigidly anchored, personal fall arrest system of the shock absorbing lanyard type or self-retracting lifeline type. In view of the types of equipment available, potential locations of anchor points, and typical distance between work surfaces and the next lower level, the Committee determined that 15 feet was an appropriate threshold for requiring fall protection, subject to the two exceptions mentioned above.

OSHA received comments supporting a requirement for fall protection beginning at 15 feet (Exs. 13–354; 13–151; and 13–207C). The National Erectors Association (Ex. 208X, p. 115) supported a 15-foot rule and testified against the ''one size fits all'' trend (relative to having a 6-foot rule). Robert Banks of the Safety Advisory Committee of Structural Steel (Ex. 205X, p. 294) felt that, when finalized, the proposed rule would generate widespread use of personal fall arrest equipment. Innovative Safety, (Ex. 207X, pp. 15–16) testified that 15 feet was realistic and that various fall arrest systems could be used at that height. One commenter (Ex. 13–246) advocated a 10-foot rule.

However, OSHA also received comments and testimony in support of a 6-foot fall protection rule. Several commenters advocated consistency between Subpart R and M (Exs.13–159; 13–148; 13–121; 13–260; and 13–215). Some general contractors stated they support a 6-foot fall protection rule for steel erectors (Exs. 207X, p. 211; 207X, pp.134–135, p.172; 207X, pp. 182–186; 207X, p. 172; 13–366; 13–352; 13–306; 13–346; 13–340; 13–338; 13–240; 13–229; 13–214; 13–192; 13–167; and 13–159). Five of these companies testified to the successful implementation of their 6-foot programs for steel erection for all steel erection operations, including connecting and decking. For example, a representative from Kellogg Brown & Root testified (Ex. 207X, pp. 133–134) that their company has had a 6-foot policy for eight years. When the structure cannot accommodate fall protection or fall prevention systems, their company uses aerial lifts and/or scissors lifts. W.S. Bellows Construction Corp. implemented a 6-foot fall protection policy in 1994 (Ex. 207X, pp. 136–141) when subpart M took effect. Bellows testified that their policy has increased productivity, decreased insurance costs, and saved lives. An official from CENTEX Construction Co., a general contractor, declared (Ex. 207X, pp.182–186) that his company, because of positive experiences on earlier projects, implemented a policy to hire only subcontractors using 6-foot programs. Turner Construction Company's spokesman testified (Ex. 207X, p. 211) that their company would prefer a 6-foot rule, but could operate with a 15-foot threshold.

Four commenters referenced the fatality statistics and were concerned that OSHA included the SENRAC fall protection provisions in the proposed rule. These commenters contended that technology was available to protect steel erection workers at 6 feet (Nigel Ellis Ex. 23; Beacon Skanska Const. Co. Ex.–13–285; Clark Construction. Co. Ex. 202X, p. 9–10; and Joseph Fitzgerald Ex. 13–31). However, one of these commenters, Mr. Nigel Ellis, acknowledged that preplanning might not preclude all the anchorage point problems, and where employers prove that it is infeasible to provide overhead anchorage points, the rule should contain provisions that would permit free fall distances greater than 6 feet. For example, if workers are in situations where the only anchor point is at foot level, there would be difficulties when using personal fall protection at 6 feet. In general, in order to use a personal fall arrest system at 6 feet, the system would have to either be anchored above the worker's head or set up to restrain the worker from stepping past an open side or hole. For many steel erection activities, he noted this may be difficult to achieve at 6 feet.

During the rulemaking process, SENRAC and OSHA analyzed accident information derived from OSHA's IMIS system. There were two studies on steel erection fatalities—a seven-year OSHA study and a subsequent eleven-year OSHA/SENRAC study (which included the previous study's data; Exs. 9–14A; 9–42 and 49). An earlier OSHA five-year study of construction fatalities in general showed that 8% of the fatal falls occurred between 6 and 10 feet and that 25% occurred between 11 and 20 feet. However, of that 25%, the Agency does not know how many ironworker fatalities occurred between 11 and 15 feet. With this significant gap in the data, we cannot determine whether a high proportion of the falls between 11 and 20 feet occurred below 15 feet. We note that much of the steel erection

work involving single story structures, such as warehouses, is done at or above 15 feet.

After analyzing the entire record, the Agency has determined that the use of conventional fall protection at 15 feet and above is necessary and feasible in most cases. While some general contractors and large industrial steel erectors may be providing fall protection below 15 feet, the data are unclear with respect to how much of a need there may be for requiring fall protection in steel erection at those lower heights. Also, many situations in steel erection do not permit connecting fall protection below 15 feet. In addition, steel erection work that is done between 6 and 15 feet is often performed from ladders, scaffolds, or personnel work platforms (63 FR 43479). Therefore, OSHA has decided not to require conventional fall protection in steel erection below 15 feet.

Paragraph (a)(2) covers requirements for perimeter safety cables. It is modified from the proposal and moved from proposed § 1926.756(f)(1). It specifies that perimeter safety cables shall be installed at the final interior and exterior perimeters of multi-story structures as soon as the decking has been installed. These cables must be installed regardless of other fall protection systems in use. They must meet the criteria for guardrail systems in subpart M (1926.502(b)).

The final requirements differ from those proposed by specifying when the cables must be installed: ''as soon as the decking has been installed.'' Although the proposal's preamble stated SENRAC's and OSHA's intention that ''these cables * * * be installed as soon as the deck has been installed * * *'' (63 FR 43471), the proposed regulatory text carried over the broader language of the current requirement that cables be installed ''during structural steel assembly.'' To carry out SENRAC's intention, as well as to improve clarity, we have specified when the cables must be installed, so that they can protect the detail crews which follow the decking crews (Id.).

The final rule also changes the minimum thickness requirement of the cable to ¼″ to conform to the guardrail specifications required in subpart M (§ 1926.502(b)). We had proposed the cable be at least ½,″ which was the previous requirement of subpart R. We agree with the commenters that the subpart M requirements for guardrails are appropriate for the perimeter safety cables in steel erection.

The Associated General Contractors of Wisconsin and D.C. (Exs. 13–334 and 13–210) suggested that the name ''perimeter cable'' be changed to ''perimeter cable guardrails'' to be consistent with Subpart M. Because the term ''perimeter safety cable'' is so commonly used in the steel erection industry, the Agency has decided not to adopt this suggestion.

A few participants (Exs. 206X, p. 55; 13–63; and 13–209) stated that the meaning of perimeter is undefined because the perimeter may change as work progresses. However, in the vast majority of buildings the perimeter columns define the final perimeter where the edges will not be expanded. LeMessurier Consultants (Ex. 13–127) suggested that the proposed words ''periphery'' and ''perimeter'' lead the reader to believe that only the outermost edges of the structure have to be guarded and that the final interior perimeters (such as for atriums) are similar to final exterior perimeters in that these edges will not be expanded. We agree, and the final text makes clear that the final ''interior'' as well as the final ''exterior'' must be protected by the use of safety cables. However, we are not including an appendix with diagrams, as suggested, because of the wide variety of perimeter configurations.

One commenter (Ex. 206X, p. 55) testified that the steel erectors had the ingenuity to erect the perimeter safety cables and should be responsible for complying with the standard. Others commented that it should be the controlling contractor's responsibility to comply with the standard or to make sure, by contract, that competent people do the work and that it is a common practice for erectors to be tasked, by contract, with installing perimeter safety cables along with their other work.

The majority of the general contractors testified (see for example, Exs. 13–63, 13–116, 13–161 and 13–203) that they were opposed to making the controlling contractor responsible for the erection of equipment required in the steel erection standard. They feel the erectors are the most experienced at erecting perimeter safety cables and should have that responsibility.

The perimeter cable provision in the proposal did not specify either the steel erector or the controlling contractor as responsible for installing the perimeter cables. Section 1926.750(a) states, in part, that ''the requirements of this subpart apply to employers engaged in steel erection unless otherwise specified.'' Since the perimeter cable provision does not specify any particular entity as responsible for installing the cables, all employers engaged in steel erection with respect to the project are responsible for compliance with this provision, including the controlling contractor. The extent of the controlling contractor's responsibility for complying with this provision would be determined in accordance with the Agency's multi-employer policy; that policy applies to all controlling employers, irrespective of the type of construction.

Paragraph (a)(3) requires that connectors and employees working in controlled decking zones be protected from fall hazards as provided in paragraphs (b) and (c) of this section, respectively. The final rule retains (with some modifications) the proposed exceptions to the general requirement that fall protection be provided at heights above 15 feet. According to paragraphs (b) and (c), employers of connectors are partly excepted from the general rule and employers of leading edge decking workers are excepted from some of the general fall protection requirements if they comply with specified alternative procedures in these paragraphs. These provisions were the subject of much division of opinion both during SENRAC's deliberations and during the post-proposal phase of this rulemaking procedure. We discuss these provisions immediately below.

Paragraph (b) provides a special rule for employers of connectors. Paragraphs (b)(1) and (b)(2) are unchanged from the proposal. Paragraph (b)(1) requires each connector be protected from fall hazards of more than two stories or 30 feet (9.1 m) above a lower level, whichever is less. Protection at this height is currently required by OSHA's existing steel erection standard for all employees engaged in steel erection. Paragraph (b)(2) requires each connector to complete connector training in accordance with § 1926.761. Such training must be specific to connecting and cover the recognition of hazards, and the establishment, access, safe connecting techniques and work practices required by § 1926.756(c) and § 1926.760(b).

Final paragraph (b)(3) provides that connectors must be provided, at heights over 15 and up to 30 feet above a lower level, with a personal fall arrest system, positioning device system or fall restraint system and wear the equipment necessary to be tied off, or be provided with other means of protection from fall hazards in accordance with paragraph (a)(1) (or, for protection against perimeter falls, (a)(2)) of this section.

This provision reflects SENRAC's findings that at times connectors need to remain unencumbered. The revised

final provision also makes clear that this exception applies only where the employer has provided the connector with a complete personal fall protection system. This includes a personal fall arrest system as defined in § 1926.751 with secure anchorages for tying off. Employers may, of course, protect connectors working between 15 feet and 30 feet with another allowable fall protection system, in which case this limited exception does not apply.

The Committee's minutes (Ex. 6–1 through 6–11) show that the proposed ''connector exception'' was a compromise position. It was adopted by the Committee after listening to testimony of connector panels, fall protection equipment representatives, general contractor representatives, and steel erector representatives, all presenting differing views on whether connectors need different fall protection requirements than other non-connecting ironworkers. The Committee was informed that California's rule allowed the connector to be untied between 15 and 30 feet and the rule appears to be operating successfully (June 27–29, 1995-Committee Minutes). SENRAC told OSHA that it intended to define ''connector'' narrowly because the primary purpose of the definition was to specifically define which ironworkers are covered by the ''connection exemption.''

We proposed this exemption to reflect SENRAC's consensus agreement. As shown above, SENRAC recognized that the issue of fall protection for connectors was highly controversial. The minutes of the Committee show that some of its members agreed on the provision only when they were assured that within 3 years from the rule's effective date, the Agency would evaluate the available accident data and assess whether the rule was sufficiently protective.

The proposal set out reasons why SENRAC believed that this exception was necessary: ''The Committee believes that under certain conditions, the connector is at greater risk if he/she is tied off. For example, in the event of structural collapse, a tied-off connector could be forced to ride the structure to the ground.'' (63 FR 43480).

The major concern of proponents of the exception both during SENRAC's meetings and during the rulemaking comment period and hearing, was that connectors needed freedom of movement and requiring them to tie-off would hinder this. The concern, as stated previously, was that in the event of structural collapse, a connector would be forced to ''ride the structure to the ground'' if tied off, whereas he/she could jump free of the collapsing structure if he/she were not tied off. The ability to move without restraint in order to get away from incoming loads is also stated as a reason for connectors not to tie off.

The following discussion of the record combines information in the minutes of the committee with as information and comment submitted directly into the post-proposal record.

Fall protection was discussed during every SENRAC meeting. From the start, some committee participants stated that connectors need to remain unencumbered, both to do their job and to avoid dangerous conditions they commonly face. In the July, 1994 meeting where the full committee met with the fall protection workgroup, this point was made. Participants noted that connectors and some other steel erection workers are highly trained and experienced. It was stated that it would be a ''greater hazard'' to tie off such highly experienced people. (The term ''greater hazard'' has a precise legal meaning; it is an affirmative defense which requires employers to demonstrate various elements in order to be relieved of a citation. However, throughout SENRAC's discussions and the subsequent rulemaking, the term was used informally.) In its deliberations, SENRAC considered whether there are any jobs that requires a person to not be protected from fall protection because it is technically and economically infeasible. In the August, 1994 SENRAC meeting, a group of connectors from the Ironworkers Local #7 discussed ''their experiences and views on the relative merits of mandatory fall protection for connectors and other workers.'' They uniformly stated that they needed to remain unencumbered when they were working with hoisting equipment and some members recounted personal experiences where they were able to escape collapses and incoming steel only because they were not tied off. By the November 27–December 1, 1995 meeting, SENRAC agreed on a consensus view incorporating the limited exception for connectors, as proposed. A few participants insisted that OSHA review fall statistics within 3 years after the final rule becomes effective, to check on whether the exception is adequately protective of connectors.

Issue #12 in the proposal asked the public to comment on whether there should be specific criteria indicating when connectors should tie-off. We also asked if it was feasible or posed a greater hazard for connectors to tie-off and if it should be the employer's responsibility to determine where and when fall protection should be required. Several ironworkers testified during the December 1998 hearings about their personal experiences and belief that it is important to be able to move freely and, at times, to jump off a collapsing steel member.

Several commenters (Exs. 13–68; 13–345; 13–349; 13–331; and 13–114) stated connectors needed freedom of movement up to 30 feet. One commenter (Ex. 13–114) said the concern is not with falling, but being able to get away from the steel during a collapse. A member of the Ironworkers' Panel No. 1 testified (Ex. 205X, pp. 312–313) that even though the connector appears to be ''running around like he's crazy, he's not. He has a place to go, and he knows where he is going at all times.''

A number of other commenters objected to allowing connectors to choose whether to use fall protection, but none of these individuals indicated that they had experience connecting (Exs. 13–31; 13–60; 13–210; 13–222; and 13–334). The point was made, however, that, ''in the case of structural collapse, the connector will ''ride the structure to the ground'' whether or not he/she is tied off'' (Ex. 13–31). The companies described above that advocated requiring fall protection at 6 feet require the connectors on their projects to be tied-off at all times. Furthermore, some commenters supporting the connector exception acknowledge that incoming steel can injure or kill connectors when they are not tied-off; Peterson Beckner Industries, Inc., (Ex.13–354) related the case of two employees who were hit by incoming loads: the one who was tied off was hit and suffered a broken arm. The one who was not tied off was knocked off of a beam at the exterior of a building and was killed.

The record also contains two studies on steel erection fatalities—a seven-year study and a subsequent eleven-year study (which included the previous study's data) (Exs. 9–14A; 9–42 and 49). The eleven-year study categorized fatalities in a number of ways, including by ''activity'' and by ''cause.'' Of the various causes listed, collapse was the third highest at 15.8% of the fatalities (the highest category was falls from slipping at 24%; second was ''unknown'' at 17%). By activity, connecting was second highest at 17% (the most dangerous activity was decking, at 23%).

The concern about collapses is the most cited reason for allowing connectors to not use fall protection equipment. SENRAC recommended and OSHA proposed new provisions that

address the causes of collapses such as inadequately cured concrete column foundations and inadequate or improperly repaired anchor bolts. The final rule addresses these by requiring concrete to be properly cured, a sufficient number of anchor bolts to support the columns and that anchor bolts are properly repaired (§ 1926.752(a); § 1926.755(a); and § 1926.755(b)). This should reduce the risk of collapse to connectors.

With respect to uncontrolled incoming steel exposing connectors to struck-by hazards, the final rule contains criteria for hoisting and rigging of steel members to minimize the likelihood of a suspended load shifting, falling and striking employees. Paragraph (a) of 1926.753 requires a competent person to perform a pre-shift visual inspection of the crane, and for qualified riggers to inspect all rigging prior to each shift. Section 1926.753(b) addresses working under the load. This paragraph requires employers to minimize employee exposures to the extent possible; however, it may be necessary for certain employees, such as connectors and those hooking and unhooking loads, to briefly work directly below a suspended load. To minimize this hazard, qualified riggers are required to rig the load to prevent displacement and to use a self-closing safety latch (or equivalent). These precautions are designed to minimize the chance of components disengaging from the hook and causing the load to fall, which should also reduce the risk to connectors.

After reviewing the comments and testimony submitted to the rulemaking record after the proposal was published, OSHA has determined that the post-proposal rulemaking record is similar to the comment and testimony submitted to the Committee during its meetings and in various workgroup meetings. In addition, the consensus agreement of the Committee, which included representatives of all interests affected by this rule, reflects an agreement that employee safety would be promoted by the adoption of the proposed standard, including the connector exception. Comment and testimony submitted by connectors and various representatives of ironworker employees overwhelmingly supported the proposed provision allowing connectors to not tie-off when working below 30 feet. For all these reasons, the Agency has decided to defer to the determinations of the Committee and allow connectors to not be tied-off in order to avoid hazards. The definition of ''connector'' reflects SENRAC's intention to define that term narrowly. And as requested by some members of SENRAC, OSHA will examine the compliance experience of this provision within 3 years to determine if connectors are adequately protected from falls applying these provisions.

In sum, since the Committee considered the full range of evidence on this issue in its deliberations, the Agency is deferring to its expertise and assessment of that evidence. The Committee's expertise, in combination with the information relied upon by the Committee, has provided OSHA with much of the supporting evidence for this standard. While other approaches for protecting connectors against falls may be possible, based on the Agency's concurrence with the negotiated proposal, the information in the record, including material used and generated by SENRAC during the negotiating process, OSHA has relied on the Committee's expertise and decided in this instance in favor of the approach recommended by SENRAC.

Paragraph (c) Controlled Decking Zone (CDZ).

The final standard's provisions for controlled decking zones (CDZ) are mostly unchanged from the proposal. The CDZ is an alternative to fall protection for leading edge decking workers between 15 and 30 feet above a lower level. If an employer establishes a CDZ that conforms to paragraph (c), employees authorized to be in that zone who are trained pursuant to § 1926.761, do not have to be provided with or use a fall protection system. OSHA proposed the provision based on SENRAC's consensus view that this alternative approach to fall protection would substantially reduce the number of accidents involving falls during decking.

Paragraph (c)(1) requires that each employee doing leading edge work in a CDZ must be protected from fall hazards of more than two stories or 30 feet, whichever is less. CDZs are inappropriate for decking operations at and above these heights. For example, single story, high bay warehouse structures and pre-engineered metal buildings often require decking operations more than 30 feet above lower levels. The exception would not apply in these situations.

An important aspect of a CDZ is controlled access. OSHA fatality date (Ex. 9–14 and 9–49), indicate that some employees who suffered fatal falls from areas that were being decked were not engaged in leading edge work. Paragraph (c)(2) limits access to the CDZ exclusively to those employees who are actually engaged in and trained in the hazards involved in leading edge work.

Final paragraph (c)(3) addresses the physical limits of a CDZ, and requires that the boundaries be designated and clearly marked. The CDZ shall not be more than 90 feet (27.4 m) wide and 90 feet (27.4 m) deep from any leading edge, and control lines, or the equivalent (for example, the perimeter wall), shall be used to restrict access to the area.

The proposal asked for public comment on whether a definition of ''control lines'' was necessary, or whether non-mandatory appendix D, which describes acceptable criteria for control lines, provided an adequate description. It also asked whether appendix D should be incorporated into the fall protection provisions.

Several commenters (Exs. 13–113, 13–170G, 13–344, 13–173, 13–210 and 13–215) requested that Subpart R's control line criteria conform to the criteria found in subpart M—§ 1926.502(g)(3). In the final rule, OSHA has made the provision more consistent with subpart M where possible. A new paragraph was added to subpart R's appendix D regarding flagging or marking of the control line with highly visible material. The only remaining difference in the control line requirements is the allowable distance from the leading edge. A control line for a controlled decking zone is to be erected not more than 90 feet (27.4 m) from the leading edge, while the maximum distance permitted in Subpart M is 25 feet. The longer maximum distance in Subpart R is needed because of the size of the bays that are decked.

A commenter (Ex. 13–86), a contractor who performs traditional and pre-engineered steel erection, asked OSHA to conform the requirements for ''control lines'' in subpart R with the requirements for ''warning lines'' in subpart M since, in its view, the two systems serve basically the same purpose. OSHA disagrees with the commenter. We believe the systems perform different functions and therefore need different criteria to address those differences.

The controlled decking zone section requires that the boundaries of the zone be designated and clearly marked and that the access be limited exclusively to those employees engaged in leading edge work. One means of fulfilling this obligation is to erect control lines. While other methods might also be used, control lines are commonly used to restrict access to the unprotected area by creating a highly visible boundary. Their high visibility readily defines the area in which employees will work

without conventional fall protection, and visually warns employees that access is limited to authorized personnel. Warning line systems, however, are erected close to the edge of a roof (as close as 6 feet). They delineate the area where mechanical equipment may be used on roofs, and warn employees when they are approaching a fall hazard. The criteria for warning lines contemplated that there would be unintended contact with the line (such as an employee backing into it), and that such contact will attract the employee's attention, enabling the employee to stop in time to avoid falling off the roof. As referenced in the preamble to subpart M (59 FR 40712), the basis for the warning line system originated from the 1980 rule for Guarding of Low-Pitched-Roof-Perimeters During the Performance of Built-Up Roofing Work (45 FR 75618–631). The 1980 preamble specifically stated that warning lines function by providing a direct physical contact with the employees. This direct physical contact with the line dictates that the criteria for warning lines be substantially stronger and more rigid then a system whose primary function is to limit access by a visual warning.

Paragraph (c)(4) states that each employee working in a CDZ must complete the CDZ training, as specified in this subpart. Employees are required to be trained to recognize the hazards associated with working in a controlled decking zone, and trained in the establishment, access, safe installation techniques and work practices required by certain sections of this subpart, such as § 1926.754(e)—Decking and § 1926.760(c)—Controlled Decking Zone.

Paragraph (c)(5) requires that during initial placement, deck panels shall be placed to ensure full support by structural members. This provision addresses the specific hazard that results when full support is absent when placing metal decking. For example, in steel joist construction, metal deck sheets are typically 20 feet or longer and may span more than 4 joists (typically spaced 5 feet apart). A hazard is created if the deck is placed so that only three joists are supporting the sheet and the deck ends are unsupported. A worker not using fall protection and stepping onto the unsupported end of a deck sheet so placed is exposed to a potentially fatal fall hazard.

Paragraph (c)(6) states that unsecured decking in a CDZ shall not exceed 3000 square feet (914.4 m^2). This section is intended to limit the area of unsecured decking in which employees work. Because metal decking sheets are typically not uniformly sized and can create alignment problems, it is common practice to install a series of unsecured sheets on the structural member prior to fastening. The Committee believed that 3000 s.f. would be necessary for the metal decking to be placed and then properly aligned prior to tack welding.

The final rule, in § 1926.760(c)(6), prohibits more than 3000 feet of unsecured decking in the CDZ. This provision is unchanged from the proposal. OSHA explained this provision in the preamble to the proposal as follows: ''The proposal would limit the area of unsecured deck to 3000 square feet (914.4 m^2) to restrict the exposure to employees engaged in the placement of these deck sheets. Given the dimensions of typical bay (a typical bay is approximately 9000 s.f.), 3000 square feet was determined to be an appropriate limit that would allow for the decking to be placed and alignment to be performed prior to tack welding. This limit would thus greatly reduce the hazards associated with large areas of decking being left unattached and unattended.'' (63 FR 43481). The Steel Decking Institute's representative, Robert Paul, recommended that the provision be changed to require immediate securing of the decking in a CDZ. ''The SDI cannot endorse the concept of a CDZ with deck being unfastened and petitions that it be changed. Our position is and [has] always been that decking can be fastened immediately and should not be walked on until after it is fastened.'' (Ex. 203X; p. 98). Phil Cordova, a SENRAC member, acknowledged that immediate securing was probably feasible in some cases: ''* * * I think that you're probably correct on some decks probably need to be attached immediately.'' (Ex. 203X; p. 104). By contrast, SDI acknowledged in testimony that there were instances where you could not immediately attach the decking: In response to Mr. Cordova's question: ''How would you align these decks if they're attached and they vary in size?'', Mr. Paul stated: ''Most decks, those with a nestable side lap, certainly have an adjustability that they can be laid to a varying level of coverage. Even decks that have a button punchable side lap within the standard button punchable type side up, there is some leeway to it. Some decks cannot. Some decks do need to be incremented that have no adjustability in the button punchable side lap. And really the only way to put those down is to increment them.'' (Ex. 203X; p. 105). Mr. Cordova elaborated on the kind of decking which cannot be immediately secured. It is ''type B'' decking, a corrugated type of decking used generally as a ''roof deck, not as a floor deck'' that ''we generally see in warehouse applications''. (Ex. 203X; p. 142–143). Mr. Cordova agreed that this type of decking is used in multi-story structures as well (*Id*).

Since this issue was so closely considered by the Committee during its deliberations, the Agency has decided to defer to its judgment and promulgate the provision essentially unchanged. Although the final rule does not require it, OSHA encourages employers to use alternative kinds of decking which are easier to attach initially, wherever such decking is appropriate and available.

Paragraph (c)(7) states that safety deck attachments shall be performed in the CDZ from the leading edge back to the control line and shall have at least two attachments per panel. This provision was intended to address the hazard in leading edge work that arises when an employee turns his/her back to the leading edge while attaching deck sheets. This provision will help prevent employees from inadvertently stepping off the leading edge. Safety deck attachments are usually accomplished with tack welds but can also be achieved with a mechanical attachment, such as self-drilling screws, or pneumatic fasteners.

Paragraph (c)(8) prohibits final deck attachments and the installation of shear connectors from being done in the CDZ. Activities such as these are not leading edge work, and employees performing this type of work can be readily protected from falls by the use of conventional fall protection.

Phil Cordova, testifying for the Decking Panel of SENRAC, stated: ''this controlled decking zone that [SENRAC has] created will save lives. It will make the job a lot safer. This is our recommendation * * *'' (Ex. 208X; p. 143). Fred Codding, another member of SENRAC, testified that the CDZ provision ''was one of the most important decisions made during the course of SENRAC'' (Ex. 208X; p. 211). Mr. Codding noted that the decision to recommend the CDZ ''influenced other segments of the proposed standard, which deal with decking such as loads, covering holes and other things. They were all part of a real * * * compromise * * *'' (*Id*).

Some of the comments to the record questioned the sufficiency of the CDZ alternative to prevent falls in light of the statistical information in the record showing that a high percentage of steel erection fatalities result from decking accidents. SENRAC believed that many

of the accidents attributed as falls during decking will be prevented by the restricted access of the CDZ, and by requirements for decking construction in paragraph § 1926.754. SENRAC's position was stated by Mr. Codding at the rulemaking hearing:

> [M]any of these accidents were merely not people just walking off or falling off the leading edge of decking, but * * * (were due to) the lack of knowledge on how to install floor or roof decking; * * * people were walking through the area that had no business in the area (and) were falling and slipping through the sheets; that they had no idea the sheets were loose and could become displaced; that there was improper bearing on the sheets on the structural beam supporting them; that bundles of the decking were landed on unsecured members.

(*Id* at 67).

As pointed out by the testimony of Mr. Robert Samela, president of a metal deck erecting company operating as deck erectors since 1972, ''this reduction in fatalities ignores the positive effects of additional training * * *'' (Ex. 208X; p. 138–139).

The question of whether to require conventional fall protection for decking operations was vigorously debated during the SENRAC deliberations. SENRAC reached its position after various contractors, equipment manufacturers and decking workers appeared before the Committee and discussed both the feasibility of conventional fall protection and whether to rely instead on CDZs to protect workers from falls.

When OSHA proposed the standard, we asked the public for information about the feasibility and hazard potential of providing fall protection to deckers (63 FR 43485). Comments were submitted which indicated that some general contractors had successfully employed fall protection systems for decking workers (Ex. 207X; pp. 172–173, 207X; pp. 235–239, 202X; pp. 153–154, 207X; pp. 292–293 and 13–73). However, the evidence and objections to the provision submitted after the proposal were similar to the evidence and objections considered by the Committee during its deliberations. Virtually all the employees who testified or submitted opinions into the record on their experience on the decking issue supported the Committee's recommended provisions for the CDZ alternative to fall protection.

On this record, the Agency defers to the Committee and leaves the provision unchanged in the final rule. Other approaches for protecting decking employees against falls may be possible. However, based on the Agency's concurrence with the negotiated proposal and its reliance on the Committee's expertise, we have decided to promulgate SENRAC's CDZ alternative as proposed.

The CDZ alternative has built-in restrictions and will allow only a small number of workers to work without fall protection. Although the accident data presented to the record shows that decking accidents rank first in fatalities in steel erection, further analysis shows that some of the ''decking'' fatalities involved workers doing other jobs (for example, roofers falling onto unsecured decking; see also Ex. 9–14 and 9–49). The CDZ alternative applies only to workers performing leading edge work and initially attaching the decking. These are the only workers who are allowed to enter a CDZ. We agree with Mr. Bill Shuzman's statement (Ex. 208X; p. 130) that: ''The controlled decking zone deals with a very small percentage of the number of people who are considered deckers. These are the people who do leading edge deck work.'' Further, the CDZ alternative provisions to fall protection apply only while leading edge work is being performed. ''Leading edge'' in this standard has the same meaning as in subpart M, OSHA's general construction fall protection standard. That standard, § 1926.500 (b), states that ''leading edge means the edge of a * * * walking/working surface (such as the deck) which changes location as additional * * * decking [is] placed * * *''. For decking in steel erection, the core ''leading edge'' tasks are lifting decking panels from the bundles placed on the secured decking next to the leading edge, and placing and aligning the panels prior to tack welding. As soon as the decking for the leading edge is finished (placed for fastening), that area no longer qualifies for use of a CDZ, and any employees in the area must be otherwise protected from falls.

The provisions making up this exception clearly limit the exception's application. We emphasize that the CDZ is not a general exception to fall protection requirements for all employees who install decking, or who work in the area while decking is being installed. Paragraph § 1926.760(c) states that a CDZ alternative to fall protection is allowed only for decking employees when metal decking is being initially installed and while that decking material forms the leading edge of a work area.

A core requirement of the CDZ alternative is § 1926.761(c)(3), which specifies that only employees trained in accordance with the standard's CDZ training provisions are allowed in the CDZ. That provision requires that each employee be provided training in ''the nature of the hazards associated with work within a controlled decking zone; and the establishment, access, proper installation techniques and work practices required by § 1926.760(c) and § 1926.754(e). This special CDZ training supplements the required fall hazard training in § 1926.761(a). OSHA believes that the implementation of these new training provisions will improve the safety of all employees who work in areas where decking is being installed. The record contains evidence that some employers are already providing this training. At the hearing Mr. Michael White of the Training Department of the International Association of Bridge, Structural Ornamental and Reinforcing Ironworkers stated that his organization, ''in response to the new training provisions'' has already started to develop specialized training curriculum for CDZ workers and other activities required to be trained under SENRAC's recommended standard. According to the statement read by Mr. White, these training programs ''will be taught at approximately 160 training centers as an integral part of the apprenticeship training and journeyman training conducted at these centers. In addition, this new training curricula will also be used at the annual Ironworkers Instructors Training Program, * * * held * * * for a period of two weeks to train persons who are certified instructors in local and state ironworker training programs through the United States * * * '' (Ex. 208X; pp. 62–63). Mr. Codding (Ex. 208X; p. 65), an employer representative, also testified that he introduced SENRAC's training recommendations on CDZ work and other areas at the annual instructor training referenced by Mr. White. ''There were some 500 participants that I reviewed those (the decking requirements and several of the connecting requirements) with.'' Mr. Codding continued: ''I really want to point out that we as employer contractor representatives have also taken steps to coordinate this training curriculum, which is being developed.''

Paragraph (d) Criteria for Fall Protection Equipment

A new paragraph (d) was added to the final rule to clearly state that the protective systems mentioned in paragraph (a)(1) must conform to the criteria found in subpart M. Several commenters felt that proposed paragraph (a)(2) was too confusing. Some confusion resulted from the proposed rule's requirement that restraint systems meet the requirements

of § 1926.502. The confusion stems from the fact that § 1926.502 does not mention restraint systems.

Final paragraph (d)(1) requires guardrail systems, safety net systems, personal fall arrest systems, positioning device systems and their components to conform to the criteria in § 1926.502. Section 1926.502 does contain requirements for components of personal fall arrest systems, many of which are also used in restraint systems.

Final paragraph (d)(2) clarifies that the components used in a restraint system in steel erection work must meet the requirements in § 1926.502 for those components. Proposed paragraph (a)(2) indicated that the terms ''fall restraint system'' and ''positioning device system'' were interchangeable. Two fall protection consultants, Mr. Dan Paine and Mr. Nigel Ellis, testified that the terms should be distinguished. Mr. Paine describes a restraint system as a means to restrain someone from falling by not allowing them to get to the leading edge (Ex. 207X, pp. 12–13). Mr. Ellis says (Ex. 202X, pp. 128–129) that OSHA should decide whether fall restraint is a means of restricting a person's motion towards an edge or is the same as a work positioning device. He further stated that these systems are poorly understood by the construction industry, manufacturers and by various OSHA offices due to the similarity of their components. Other commenters (Exhibits 13–3, 13–192 and 13–221) expressed concern over allowing workers to fall while wearing a body belt, apparently in reference to the fact that body belts are permitted to be used in positioning devices and restraint systems. They urged consistency between subparts R and M.

The Agency has recognized that restraint systems and positioning devices refer to different types of protective devices. Under subpart M, a positioning device (1) allows an employee to be supported on an elevated, vertical work surface, such as formwork or rebar assemblies; (2) permits the worker to work with both hands free while leaning backwards, and (3) limits a fall to up to two feet. Restraint systems are not mentioned in subpart M. However, the Agency has defined restraint systems in letters of interpretation as systems that prevent workers from being exposed to any fall. Restraint systems may be used on either a horizontal or vertical work surface.

In brief, a positioning device enables an employee to work in a position that allows the employee to fall, but only up to two feet. A fall restraint system prevents the employee from reaching an open side or edge, thus preventing the employee from falling.

Because the Agency has correctly distinguished these devices in the past, the final rule has been changed to be consistent with these distinctions. Both systems must use components that comply with § 1926.502. We are reprinting the criteria from § 1926.502 in Appendix G to assist employers and employees.

Final rule paragraph (d)(3) requires that perimeter safety cables must comply with the relevant criteria for guardrail systems in § 1926.502. E–M–E, Inc. (Ex. 202X; p. 65) testified that other trades often use the cables to climb or tie off to. Perimeter safety cables must not be used as an anchorage point for personal fall arrest systems unless they were engineered to serve that purpose.

The proposed rule included perimeter safety cables as one of the specified methods of fall protection and specified that the cables consist of ½-inch wire rope or equivalent. Final paragraph (d)(1) requires that if perimeter safety cables are used, they must consist of ¼ inch wire rope or its equivalent. OSHA retained the requirement for the cables to be made of wire due to the higher probability that these cables may be struck by loads or exposed to the heat of welding on steel structures.

Many commenters asked to change the ½ inch diameter requirement for perimeter cables to ¼ inch. Arguments were made that some companies have already purchased ¼ inch cable and a switch to ½ inch would be costly. We presume that those companies have invested in ¼ inch cable to comply with Subpart M, which requires ¼ inch cables for fall protection systems, for their non-steel erection work. Vulcraft (Ex. 13–4) and Fred Weber, Inc. (Ex. 13–218) had concerns that if the ¼ inch cable requirement were switched, those that have invested in ⅜ inch would have to switch to ¼ inch.

The final rule in paragraph § 1926.760(d)(3) explicitly states that perimeter safety cables shall meet the criteria for guardrail systems in § 1926.502(b) (subpart M). This was not clear in the proposed regulatory text as pointed out by some rulemaking participants. Mr. Bob Emmerich, AGC of Wisconsin, testified (Ex. 201X, p. 78, pp. 88–90, pp. 107–108) that his organization agreed with the proposal, but felt the requirement should be consistent with subpart M. He stated that confusion could be avoided if the criteria for perimeter safety cables in subpart R mirrored that in subpart M's guardrail provision. Others also advocated consistency with subpart M (Exs.13–173; 13–210 and 13–215).

Under Subpart M, § 1926.502 (b)(9), top and midrail cables must be at least ¼ inch (''to prevent cuts and lacerations''), but they may be thicker. So, employers operating under Subpart M now, with large stocks of ¼ inch cable, will not have to purchase ½ inch cable if they begin working on steel erection jobs.

A safety consultant (Ex. 13–151) suggested that instead of specifying a minimum diameter, we specify the strength, grade, lay and cores of the cable, as well as the spacing between the supports. We point out that, apart from the ¼ inch diameter requirement, subpart M specifies strength and deflection performance requirements in lieu of specifications.

Paragraph (e) addresses the need to ensure that fall protection equipment is maintained even after steel erectors have completed their work. Usually, perimeter safety cables are initially installed and maintained by the steel erector, but the cables remain on site after steel erection work is completed. With this provision, the fall protection equipment will only be left in place if the controlling contractor (or its authorized representative) has taken responsibility for ensuring that it will be properly maintained. Without this provision, the fall protection could fall into disrepair and become ineffective. This requirement is fairly similar to the AISC Code of Standard Practice (Ex. 9–36, p. 15) which states:

> When safety protection provided by the erector is left remaining in an area to be used by other trades after steel erection activity is completed, the owner shall be responsible for accepting and maintaining this protection, assuring that it is adequate for the protection of all other affected trades, assuring that it complies with all applicable safety regulations when being used by other trades, indemnifying the erector from any damages incurred as a result of the safety protection's use by other trades, removing the safety equipment when no longer required and returning it to the erector in the same condition as it was received.

Commenters in support of the provision stated that steel erectors were concerned that if they left their fall protection in place after finishing their work, nobody would maintain the fall protection, and they would be held liable. OSHA agrees with the commenters that this could give employers of other trades a false sense of security, and could cause employees to be injured.

Other commenters asserted that controlling contractors should not be required to provide fall protection to the employees of other employers. First, this provision does not require the

controlling contractor to accept responsibility for the fall protection equipment. The controlling contractor has the option of refusing to accept responsibility. If it refuses to accept responsibility, then the fall protection equipment must be removed. Second, the controlling contractor already has obligations with respect to the safety of employees of other employers under the Agency's multi-employer policy. A controlling contractor may refuse to accept responsibility for the equipment and require the other trades to erect and maintain their own fall protection equipment. Such a decision would be consistent with both that policy and this provision. As a practical matter, it was SENRAC's view that the controlling contractor is in the best position to make the decision about whether to accept responsibility for the equipment, since it has authority over the site and can best coordinate the other trades and deal with the ramifications of this type of decision. The record does not show that view to be unreasonable.

Section 1926.761 Training

The OSHA steel erection standard has many new requirements involving more widespread use of personal fall protection equipment and special procedures for making multiple lifts, for decking activities in controlled decking zones and for connecting. SENRAC and OSHA recognized the need for a separate training section to address these and other requirements. The requirements in § 1926.761 supplement OSHA's general training and education requirements for construction contained in § 1926.21.

Since the employer can choose the provider, method and frequency of training that are appropriate for the employees being trained, the employer has flexibility in developing and implementing a training program. The program must meet the requirements of this section, and each employee must be provided the training prior to exposure to the hazard. The employer can choose the provider, method and frequency of training that are appropriate for the employees being trained. The provider may be an outside, professional training organization or other qualified entity, or the employer may develop and conduct the training in-house.

A commenter (Ex. 13–246) pointed out that the training provisions do not require that the employer verify that the employees understand what they have been taught. Another commenter (Ex. 13–216) recommended that OSHA's goal should be to mandate that ironworkers are trained and certified as competent by their employer.

The requirement to provide training is met only when the training is effective in providing the knowledge stipulated in these provisions. An effective training program necessarily involves some means of determining whether the instruction is understood by the employee. This can be done in a variety of ways, such as formal oral or written tests, observation, or through discussion. The previous commenter added that retraining is not addressed but needs to be included with a requirement for annual refresher training with verification (Ex. 13–246). Another commenter (Ex. 13–354) asserted that there is no mention of prior training received from previous employers. He argued that if an ironworker has been trained by his previous employers to possess a certain skill or skills (for example, a connector), it seems costly and unnecessary to require the ironworker to be re-trained prior to going to work for another employer.

While retraining/refresher training is not specifically addressed, the employer is responsible for making sure that it has programs necessary to comply with the training requirements in § 1926.21(b)(2): ''The employer shall instruct each employee in the recognition and avoidance of unsafe conditions and the regulations applicable to his work environment to control or eliminate any hazards or other exposure to illness or injury.'' Steel erection involves progressive sequences of erection, so that the work environment on any one day may involve entirely different or unique new hazards than the day before and that new employees may enter the erection process when it is already underway. In order to apply § 1926.21 during steel erection activities, an employer would have to assess the type of training needed on a continuing basis as the environment and changes in personnel occur. It is the employer's responsibility to determine if an employee needs retraining in order to strengthen skills required to safely perform the assigned job duties, and whenever the work environment changes to include newly recognized or encountered hazards. This is a key element in the employer's accident prevention program.

Where an employer hires a worker, such as a connector, who is already trained and skilled, OSHA anticipates that the employee's high level of knowledge will be readily apparent and easily ascertained by informal discussion and observation.

A commenter (Ex. 13–216) suggested that the complexity of the steel erection standard will require extensive training to ensure that ironworkers are aware of the new way of performing their work. The Safety Advisory Committee of the Structural, Ornamental, Rigging and Reinforcing Steel Industry (SAC) (Ex. 208X; p. 68) commented that they support the training requirements as proposed.

OSHA agrees that additional training will be required to ensure that the employees are aware of and understand the regulations applicable to their work environment. However, the Agency believes that the new requirements in this rule are needed to make steel erection safer, and the additional training requirements will play a major role in achieving that increased safety.

Paragraph (a) requires that all training required by this section be provided by a qualified person. As discussed earlier, a ''qualified person,'' is defined in § 1926.751 as one who, by possession of a recognized degree, certificate, or professional standing, or who by extensive knowledge, training, and experience, has successfully demonstrated the ability to solve or resolve problems relating to the subject matter, the work, or the project.

Paragraphs (b)(1) through (b)(5) require employers to provide a training program for all employees exposed to fall hazards. The program must include training and instruction in recognition and identification of fall hazards in the work area [(b)(1)]; the use and operation of guardrail systems, personal fall arrest systems, fall restraint systems, safety net systems, controlled decking zones and other protection to be used [(b)(2)] ; the correct procedures for erecting, maintaining, disassembling, and inspecting the fall protection systems to be used [(b)(3)]; the procedures to be followed to prevent falls to lower levels and through or into holes and openings in walking/working surfaces and walls [(b)(4)]; and the fall protection requirements of § 1926.760 [(b)(5)].

In the proposal, paragraph (b)(2) stated that training had to be given with respect to perimeter safety cables as well as guardrails. The reference to perimeter safety cables in the training section has been deleted in the final rule because, under the final rule, perimeter safety cables are considered guardrails (under § 1926.760 (b)(3), they must meet the requirements for guardrails in § 1926.502). There were no comments received regarding these provisions, and no other changes were made in the final rule.

Paragraph (c) requires specialized training for employees engaged in multiple lift rigging procedures, connecting activities and work in controlled decking zones, due to the

hazardous nature of these activities. There were no comments received regarding the provisions in § 1926.761(c)(1), (c)(2) and (c)(3), and they are promulgated without change.

Paragraphs (c)(1)(i) and (c)(1)(ii) require additional training for employees performing multiple lift rigging in accordance with the provisions in § 1926.753(e). The special training includes, at a minimum, the nature of the hazards associated with multiple lifts; and the proper procedures and equipment to perform multiple lifts.

Paragraphs (c)(2)(i) and (c)(2)(ii) require employers to ensure that each connector has been provided training in the hazards associated with connecting, and in the establishment, access, proper connecting techniques and work practices required by § 1926.760(b) (fall protection) and § 1926.756(c) (double connections).

Paragraphs (c)(3)(i) and (c)(3)(ii) require employers to provide additional training for controlled decking zone employees. The training must cover the hazards associated with work within a controlled decking zone, and the establishment, access, proper installation techniques and work practices required by § 1926.760(b) (fall protection) and § 1926.754(e) (decking operations).

Appendices to Subpart R

The following appendices neither create additional obligations nor eliminate obligations otherwise contained in the standard. They are intended to provide useful, explanatory material and information to employers and employees who wish to use it as an aid to understanding and complying with the standard.

Appendix A to Subpart R—Guidelines for Establishing the Components of a Site-Specific Erection Plan (Non-Mandatory). As explained in the discussion for the section governing site-specific erection plans (§ 1926.752), this appendix was developed by SENRAC as a non-mandatory set of guidelines to assist employers in complying with the requirements of final paragraph § 1926.752(e). If an employer follows these guidelines to prepare a site-specific erection plan, it will be deemed as complying with the requirements of paragraph § 1926.752(e). No comments were received on this Appendix and it remains unchanged from the proposed rule except for adding ''anchor rod'' in (c)(3)(iii) to be consistent with the changes made to § 1926.755 of the final rule.

Appendix B to Subpart R—Acceptable Test Methods for Testing Slip-Resistance of Walking/Working Surfaces (Non-Mandatory). Appendix B is provided to serve as a non-mandatory guide to assist employers in complying with the requirements of final rule paragraph § 1926.754(c)(3). The two nationally recognized test methods referred to in appendix B, ASTM F1677–96 (Standard Test Method for Using a Portable Inclineable Articulated Strut Slip Tester) and ASTM F1679–96 (Standard Test Method for Using a Variable Incidence Tribometer), provides the protocol for testing coatings for skeletal structural steel surfaces to obtain the documentation or certification required by § 1926.754(c)(3). No comments were received on this Appendix and it remains unchanged from the proposed rule except for correcting the cite to ASTM F1677–96 which was incorrectly identified as ASTM F1678–96 in the proposed rule.

Appendix C to Subpart R—Illustrations of Bridging Terminus Points (Non-Mandatory). This appendix is a non-mandatory guide to assist employers in understanding the requirements of section §§ 1926.757(a)(10) and 1926.757(c)(5). The illustrations show several (but not all) common bridging terminus points. This Appendix remains unchanged from the proposed rule except that a reference was added to § 1926.757(a)(10) which was overlooked in the proposed rule and correcting an inaccurate reference to § 1926.757(c)(3) in the proposed rule. This appendix is provided to employers as a non-mandatory guide to assist in complying with the requirements of sections 1926.757(a)(10) and 1926.757(c)(5).

The Agency received two written comments addressing this appendix. One commenter (Ex. 13–308) stated that: (1) The anchors indicated in many of the figures should be labeled as ''appropriate anchors'' rather than ''lag with shield or embedded anchor;'' (2) lag shield anchors are not always appropriate; and (3) the notation ''looped around top chord'' should be changed to ''wrapped around top chord.'' The other commenter (Ex. 13–151) identified a number of deficiencies in the illustrations.

The Agency's engineers reviewed the comments on the illustrations and believe the illustrations are accurate illustrations of some common bridging terminus points. The titles of the illustrations are terms that are commonly understood in the industry. These illustrations were not meant to cover all construction site situations.

Therefore, the agency has not changed the illustrations or the titles. The proposed text in Appendix C is adopted as a nonmandatory reference.

Appendix D to Subpart R—Illustration of the Use of Control Lines to Demarcate Controlled Decking Zones (CDZs) (Non-Mandatory). Appendix D is provided to serve as a non-mandatory guide to assist employers in complying with the requirements of final rule paragraph § 1926.760(c)(3). If the employer follows these guidelines to establish a control line to demarcate a CDZ, OSHA will accept the control line as meeting the requirements of paragraph § 1926.760(c)(3). This appendix neither creates additional obligations nor eliminates obligations otherwise contained in the standard. It is intended to provide useful explanatory material and information to employers and employees who wish to use it as an aid to understanding and complying with the standard. No comments were received on this appendix and it remains unchanged from the proposed rule.

Appendix E to Subpart R—Training: (Non-Mandatory). Appendix E is provided to serve as a non-mandatory guide to assist employers in complying with the requirements of final paragraph § 1926.761. Even before the existence of OSHA, the Ironworkers International Union provided apprenticeship training in steel erection to its members. This training has been approved by the U.S. Department of Labor's Bureau of Apprenticeship Training for over forty years. As soon as this program is updated to reflect the requirements of this new subpart R, training under this program will be deemed as complying with the training requirements of § 1926.761. As stated in Article XI of the current approved National Apprenticeship and Training Standards for Ironworkers:

> The [Ironworkers Joint Apprenticeship] Committee shall seek the cooperation of all employers to instruct the apprentices in safe and healthful work practices and shall insure that the apprentices are trained in facilities and other environments that are in compliance with either the occupational safety and health standards promulgated by the Secretary of Labor under [the OSH Act] or state [plan] standards* * * (Ex. 9–139; p. 8).

Training approved by the U.S. Department of Labor's Bureau of Apprenticeship Training is not the only training that OSHA will accept under this standard. Employers may choose to provide their own training, provided that it fulfills the requirements of § 1926.761.

As proposed, Appendix E stated: ''The training requirements of § 1926.761 will be deemed to have been met if employees have completed a training course on steel erection, including instruction in the provisions of this standard, that has been approved by the U.S. Department of Labor's Bureau of Apprenticeship.''

One commenter (Ex. 13–222) indicated that there are many other avenues for training that are not approved by the U.S. Department of Labor's Bureau of Apprenticeship Training, such as trade associations, training organizations, consultants and in-house training programs; yet the appendix does not include any sources other than those approved by the U.S. Department of Labor's Bureau of Apprenticeship Training.

Another commenter (Ex. 13–210) expressed a similar concern, stating that the Appendix implies that the only training that is acceptable is training done through an apprenticeship program approved by the U.S. Department of Labor's Bureau of Apprenticeship Training. The commenter recommended that trade associations, training organizations, consultants and in-house training programs be included in Appendix E as acceptable/recognized training entities; if not, then Appendix E should be omitted. Another commenter (Ex. 201X; p. 82) recommended that OSHA either state in Appendix E that ''employers may choose to provide their own training, provided that it fulfills the requirements of § 1926.761,'' or omit appendix E.

OSHA has decided to retain appendix E as proposed. We emphasize that appendix E does not require that training be approved by the U.S. Department of Labor's Bureau of Apprenticeship Training. Training provided by others is sufficient if it meets the requirements of § 1926.761. The Appendix simply identifies certain training—training approved by the U.S. Department of Labor's Bureau of Apprenticeship Training—that OSHA deems acceptable to meet the requirements of § 1926.761. It is appropriate for OSHA to acknowledge a training program that is administered through another office within the Department of Labor.

Training approved by the U.S. Department of Labor's Bureau of Apprenticeship Training may be used as a guide for developing and assessing other training programs. The proposed text in Appendix E is adopted as proposed.

Appendix F to Subpart R—Perimeter Columns (Non-Mandatory). Since perimeter safety cables are the method prescribed by § 1926.756(e) for guarding of perimeters, final rule appendix F provides guidance for installing them. As proposed, the first part of appendix F stated that, ''in multi-story structures, the project structural engineer of record (SER) may facilitate the ease of erecting perimeter safety cables, where structural design allows, by placing column splices sufficiently high so as to accommodate perimeter safety cables located at 42–45 inches above the finished floor. The SER may also consider allowing holes to be placed in the column web, when the column is oriented with the web perpendicular to the structural perimeter, at 42–45 inches above the finished floor and at the midpoint between the finished floor and the top cable * * *''.

The National Council of Structural Engineers (Ex. 13–308) suggested that the reference to the SER be removed and replaced by a reference to a ''competent person.'' Commenters, including a staff member from Minnesota DOT-Office of Bridges and Structures (Ex. 13–359), stated that the erector is the most competent party when it comes to erecting perimeter cables. In their view it has been a responsibility written into their contracts in the past and the responsibility should remain with them. It was also argued in testimony (201X; p. 49) that if SERs were to follow the guidelines in appendix F, they would be taking on the responsibility of ensuring that the components of a perimeter cable system comply with the requirements of subpart R, which would raise liability issues.

Apart from these concerns, the Agency has determined that this first part of the appendix could be confusing. The appendix may give the impression that having columns extend a minimum of 48 inches above the finished floor to permit installation of perimeter safety cables prior to the erection of the next tier is suggested but not required. That is not the case—it is required by § 1926.756(e)(1). The standard also requires perimeter columns to be supplied with holes or other devices in or attached to perimeter columns at 42–45 inches above the finished floor and the midpoint between the finished floor and the top cable to permit installation of perimeter safety cables (except where constructibility does not allow). Therefore, this first part of the appendix has been omitted in the final rule.

The rest of the proposed appendix does not refer to the SER. It is being retained because it contains design suggestions that would facilitate compliance with the requirements of § 1926.756(e). The appendix recommends that column splices be placed at every other or fourth levels, as design allows.

Appendix G to Subpart R—Fall Protection Systems Criteria and Practices from § 1926.502 (Non-Mandatory). Appendix G is provided to assist employers in complying with the requirements of § 1926.760(d). Appendix G restates paragraphs (b) through (e) of § 1926.502, which provide the criteria for guardrail systems, safety net systems, personal fall arrest systems and positioning device systems. These criteria are referenced by § 1926.760(d), and are included here for the convenience of employers and employees.

Appendix H to Subpart R—Double Connections (Non-Mandatory). Appendix H illustrates two methods (clipped end connection and staggered connection) that an employer may use to comply with the requirement in § 1926.756(c)(1) by maintaining at least a one bolt connection with its wrench tight nut while making a double connection. These two methods are not the only ways to comply with the standard.

These illustrations were added in response to a commenter's suggestion that OSHA add an illustration to show an example of a clipped end connection (Ex. 13–207). Clipped end and staggered connections are sound, engineered methods for maintaining a one bolt connection throughout the double connection process. OSHA is adding an illustration of a staggered connection as well, which is also an effective means of maintaining the one bolt connection.

V. Summary of the Final Economic and Regulatory Flexibility Analysis

Introduction

This final standard is a significant regulatory action under Executive Order (EO) 12866 and a major rule under the Congressional Review Act provisions of the Small Business Regulatory Enforcement Fairness Act. Accordingly, OSHA has developed a final economic analysis (FEA)(Ex. 83) of the costs, benefits, and regulatory and non-regulatory alternatives of the rule, as required by the EO. The FEA revises OSHA's preliminary economic analysis (Ex. 11) and is based upon a thorough review of the rulemaking record. This section of OSHA's notice of final rulemaking summarizes the Agency's economic analysis of the final steel erection standard.

The Regulatory Flexibility Act of 1980, as amended in 1996, requires OSHA to determine whether the Agency's regulatory actions will have a

significant impact on a substantial number of small entities. Making such a determination for this final standard required OSHA to perform a screening analysis to identify any such impacts. OSHA's screening analysis indicated that the rule might, under two worst-case scenarios, have significant impacts on a substantial number of small entities. Accordingly, OSHA has prepared a Final Regulatory Flexibility Analysis, summarized below, to accompany the final steel erection rule.

OSHA's final economic analysis and final regulatory flexibility analysis include a description of the industries potentially affected by the standard; a summary of the major changes between OSHA's existing steel erection standard (subpart R of Part 1926) and the final rule; an evaluation of the risks addressed; an assessment of the benefits attributable to the final standard; a determination of the technological feasibility of the new requirements; an estimate of the costs employers will incur to comply with the standard; a determination of the economic feasibility of compliance with the standard; and an analysis of the potential worst-case economic and other impacts associated with this rule, including those on small businesses. Below are summaries of each of the major sections of OSHA's final economic analysis.

Affected Industries

This final steel erection standard affects industries and establishments within the construction industry. Table 1 presents the industry groups in construction that will be directly affected by the final standard. Construction employers who are subject to the rule because they have employees engaged in steel erection activities are concentrated within SIC 1791, Structural Steel Erection, an industry with 4,675 establishments and 55,965 employees in 1998, as reported by Dun & Bradstreet [D&B, 1998]. Within this industry, 3,898 establishments, or 83 percent of the total number of establishments, employed nineteen or fewer employees in 1998, while 3,238 establishments (69 percent) employed nine or fewer employees. SIC 1791, however, also includes employers and workers who perform construction activities other than steel erection, notably pre-cast concrete erection. Further, contractors primarily engaged in other activities sometimes have employees engaged in steel erection. Thus, any comprehensive profile of the steel erection industry must, in addition to examining affected industry groups, focus on the type of work and the trade of the workers engaged in this form of construction.

TABLE 1.—INDUSTRY GROUPS IN CONSTRUCTION POTENTIALLY AFFECTED BY THE FINAL STEEL ERECTION STANDARD

SIC	Industry group	Iron workers [a]	Establishments with 1–9 employees		Establishments with 1–19 employees		Establishments with 1–99 employees		Establishments with 100 + employees		All Establishments [b]	
			Number of establishments	Total employment	Number of establishments	Total employment	Number of establishments	Total employment	Number of establishments	Total employment	Number of establishments	Total industry employment
15	Building Construction—General Contractors and Operative Builders	19,310	273,905	765,249	291,906	989,256	302,859	1,362,573	925	169,293	305,474	1,531,866
152	General Building Contractors—Residential Buildings	2,310	216,235	581,751	226,038	702,822	230,404	843,782	222	38,239	231,632	882,021
153	General Building Contractors—Operative Builders	50	17,995	48,256	19,123	62,040	19,879	86,737	52	9,422	20,049	96,159
154	General Building Contractors—Nonresidential Buildings	16,950	39,675	135,242	46,745	224,394	52,576	432,054	651	121,632	53,793	553,686
1541	Industial Buildings and Warehouses	.....	8,198	23,208	8,755	30,164	9,140	44,564	54	9,543	9,290	54,107
1542	Nonresidential Buildings, other than in SIC 1541	.....	31,477	112,034	37,990	194,230	43,436	387,490	597	112,089	44,503	499,579
16	Heavy Construction other than Building Construction	4,600	34,243	114,530	40,506	194,060	47,406	454,086	1,130	246,814	51,039	700,900
161	Highway and Street Construction, except Elevated Highways	540	13,055	43,972	15,320	72,574	17,173,932	173,347	478	100,804	18,735	274,151
162	Heavy Construction, except Highway and Street Construction	4,060	21,188	70,558	25,186	121,486	29,474	280,739	652	146,010	32,304	426,749
1622	Bridge, Tunnel, and Elevated Highway Construction	.....	582	2,295	817	5,263	1,191	19,627	76	14,597	1.464	34,224
1623	Water, Sewer, Pipeline, and Communications and Power Line Construction	.....	6,730	26,237	8,961	54,908	11,488	148,642	304	53,651	13,575	202,293
1629	Heavy Construction, Not Elsewhere Classified	.....	13,876	42,026	15,408	61,315	16,795	112,470	272	77,762	17,265	190,232
17	Construction—Special Trade Contractors	32,930	553,399	1,619,537	602,349	2,240,163	636,193	3,407,594	2,560	458,521	641,897	3,866,115
171	Plumbing, Heating and Air-Conditioning	640	115,500	345,897	126,268	483,637	133,483	735,986	563	100,757	134,655	836,743
174	Masonry, Stonework, Tile Setting, and Plastering	580	45,405	133,886	50,217	194,623	54,367	339,551	372	60,803	54,991	400,354
175	Carpentry and Floor Work	1,100	48,720	126,525	51,184	157,737	52,595	204,788	114	19,147	52,896	223,935
176	Roofing, Siding, and Sheet Metal Work	3,900	39,893	118,921	43,650	166,437	46,331	258,269	124	17,592	46,681	275,861
177	Concrete Work	250	23,575	78,296	26,764	118,177	28,801	185,887	118	18,536	29,094	204,423
179	Miscellaneous Special Trade Contractors	26,440	109,187	317,915	118,213	431,565	124,083	628,259	397	81,002	125,195	709,261
1791	Structural Steel Erection	.....	3,238	11,259	3,898	19,712	4,544	42,215	73	13,750	4,675	55,965
	Construction Totals	56,840	861,547	2,499,316	934,761	3,423,479	986,458	5,224,253	4,615	874,628	998,410	6,098,881

[a] U.S. Department of Labor, Bureau of Labor Statistics, Occupational Employment Statistics Survey, 1998.

[b] For some industry groups, Dun &ampi Bradstreet identified a small percentage of establishments and sales that could not be classified by establishment size. OSHA included these data in the industry totals in this table.

Source: U.S. Department of Labor, OSHA, Office of Regulatory Analysis, based on Dun & Bradstreet, National Profile of Businesses software, Dun &ampi Bradstreet Information Services, 1998.

The workers directly benefitting from the final standard are identified in occupational surveys as structural metal workers; in the industry, they are known as iron workers. According to the Bureau of Labor Statistics' Occupational Employment Statistics Survey [BLS, 1998], there were 56,840 structural metal workers in construction in 1998, the majority of whom are found in SIC 179, Miscellaneous Special Trade Contractors (26,440 structural metal workers), and SIC 154, Contractors—Nonresidential Buildings (16,950 structural metal workers) (Table 1). For this final economic analysis, OSHA used the BLS employment total for structural metal workers to estimate the number of iron workers potentially affected by the final rule in its benefits assessment and cost analysis.

Final Changes to OSHA's Steel Erection Standard

This final steel erection standard modifies and strengthens the steel erection standard it replaces in a number of areas. For example, the final standard includes a scope section that identifies the types of construction projects and activities subject to the rule. Structures excluded from coverage under the scope of the standard are steel electrical transmission towers, steel communication and broadcast towers, steel water towers, steel light towers, steel tanks, and reinforced and pre-cast concrete structures. The final rule also includes a new section addressing site layout, site-specific erection plans, and construction sequence. Other revisions to the existing standard include:

- Explicit requirements for hoisting and rigging and the protection of workers and the public from the hazards of overhead loads;
- Additional and strengthened requirements for the structural steel assembly of beams, columns, joists, decking, and systems-engineered metal buildings, including provisions for the protection of employees from tripping hazards and slippery surfaces on walking/working surfaces;
- Modified and clarified requirements for fall protection for connectors, decking assemblers, and other iron workers during the erection of structural steel; and
- New requirements for training in fall hazards, multiple lift rigging, connecting, and controlled decking zones.

For the final economic analysis, OSHA identified those requirements of the final rule that would create substantial impacts or generate substantial benefits for members of the regulated community, including workers. For many provisions of the rule, current industry practice in many establishments is adequate to meet these requirements. OSHA estimates that current industry practice meets the final regulatory requirements for 50 percent to 98 percent of affected projects with regard to providing fall arrest systems (*i.e.,* 50 percent—98 percent of affected workers currently are supplied with this equipment, with the percentage increasing with the height of the building), and that current industry practice in the use of personnel nets is such that 20 percent of affected projects meet the final regulatory requirements; 75 percent of workers receive safety training that would meet the final regulatory requirements; nearly 100 percent of all construction uses 2-rod (bolt) column anchorage (but only 10 percent use 4-rod anchorage); and 50 percent to 98 percent of projects, depending on building height, already meet the final regulatory requirements for guardrail systems. OSHA anticipates that the final standard's requirements pertaining to overhead loads, trips and slips, falls, falling objects, collapses, and worker training will both generate substantial benefits for affected employers and impose costs on them.

Evaluation of Risk and Potential Benefits

For this final economic analysis, OSHA developed a profile of the risks facing iron workers who are performing steel erection operations. OSHA's risk profile for steel erection is based on data from the Bureau of Labor Statistics' National Census of Fatal Occupational Injuries, data from the Bureau's Survey of Occupational Injuries and Illnesses, and an analysis by a SENRAC workgroup of OSHA fatality/catastrophe inspection data obtained from the Agency's Integrated Management Information System.

OSHA anticipates that the final standard will significantly reduce the number of accidents and fatalities currently reported in the steel erection industry, particularly those accidents caused by falls from elevated levels and by objects such as dislodged structural members and building materials striking workers. OSHA believes that the more protective requirements for fall protection, structural stability, and training in the final standard will help to save lives and prevent injuries in the iron worker workforce. For accidents involving events or exposures potentially addressed by the final standard, OSHA estimates that approximately 35 fatalities and 2,279 lost-workday injuries currently occur annually among structural metal workers (see Table 2, below); this is the current industry risk baseline used in this analysis. OSHA projects that full compliance with the final standard would prevent 30 of these fatalities and 1,142 of these lost-workday injuries. Eight of these fatalities and 303 serious injuries could be prevented if employers were currently in compliance with OSHA's existing steel erection standard. The final standard will thus prevent an additional 22 fatalities and 838 injuries that would not be prevented even by full compliance with the existing standard. Further, OSHA believes that issuance of this new final steel erection standard will enhance compliance even with provisions that were included in the existing standard because the final revision allows for more flexibility in compliance, is easier to understand, and is effectively targeted toward steel erection hazards.

TABLE 2.—SUMMARY OF ESTIMATED NUMBER OF DEATHS AVERTED AND INJURIES AVOIDED BY FULL COMPLIANCE WITH THE FINAL STEEL ERECTION STANDARD

	Number of fatalities and lost-workday injuries currently occurring among iron workers (a)	Number of fatalities and lost-workday injuries preventable by compliance with the existing standard	Additional number of fatalities and lost-workday injuries preventable by compliance with the final standard	Total number of fatalities and lost-workday injuries preventable by compliance with the existing and final standards	Number of fatalities and lost-workday injuries judged not to be preventable by either standard based on analysis of accident and fatality data
Fatalities	35	8	22	30	5
Lost-Workday Injuries	2,279	303	838	1,142	1,137

Note: Figures in the rows may not sum to totals due to rounding.
(a) Includes fatalities and injuries judged to be potentially preventable by the final standard.
Source: U.S. Department of Labor, OSHA, Office of Regulatory Analysis.

In addition to saving lives and improving overall safety in the steel erection industry, OSHA believes that the final standard, once fully implemented by erection contractors, will yield substantial cost savings to parties within and connected with the industry and ultimately to society as a whole. These monetized benefits take the form of reductions in employer, employee, and insurer accident-related costs in several areas: the value of lost output associated with temporary total disabilities and permanent partial disabilities; reductions in accident-related medical costs; reductions in administrative expenses incurred by workers' compensation insurance providers (including employers who self-insure); and indirect costs related to productivity losses to other workers, work stoppages, and the conduct of accident investigations and reports. Applying data from the construction and insurance industries on the direct costs of accidents and data from the literature on the indirect costs of accidents and other tort- and administrative-related costs to OSHA's estimate of avoided injuries (see Chapter III in the final economic analysis), the Agency has monetized the value of the cost savings employers and society will accrue by avoiding these injuries. The monetized benefits therefore underestimate the true benefits that will be realized by the standard. They also do not, in accordance with Agency policy, attempt to place a monetary value on the lives the final rule will save. These benefits estimates are thus gross underestimates of the true benefits that will be realized by the standard. OSHA estimates that annual cost savings of $10.4 million would result from full compliance with the current rule and an additional $29.1 million would be saved as a result of full compliance with the final rule (Table 3).

TABLE 3.—SUMMARY OF ANNUAL INCREMENTAL MONETIZED BENEFITS OF PREVENTABLE LOST-WORKDAY INJURIES ATTRIBUTABLE TO THE FINAL STEEL ERECTION STANDARD

Lost Output Associated with Temporary Disabilities	$4,397,104
Lost Output Associated with Permanent Disabilities	14,586,035
Medical Costs	4,009,699
Insurance Costs (Administrative)	2,437,064
Indirect Costs	3,686,840
Costs Associated with Liability Claims Avoided	N/Q
Total Cost Savings	29,116,743

N/Q—Not Quantified

Source: U.S. Department of Labor, OSHA, Office of Regulatory Analysis.

In addition to these monetized benefits, cost savings to employers attributable to a decline in the number of third-party liability suits can be expected. Although quantification of these tort-related legal defense costs and dollar awards is difficult because of the lack of data, OSHA believes that these employer costs are substantial and would be reduced significantly through compliance with the final standard.

Technological Feasibility and Compliance Costs

Consistent with the legal framework established by the OSH Act and court decisions, OSHA has assessed the technological feasibility of the final steel erection standard. The final rule clarifies and strengthens the Agency's existing standard, provides more stringent and specific requirements in some areas, and includes requirements for some steel erection hazards newly addressed by the Agency. Many of the final revisions are consistent with current construction means and methods used by leading firms within the steel erection industry. The success of these firms in this competitive industry demonstrates that the requirements of the final standard can be met with existing equipment and production methods. Moreover, the final standard is based on a consensus draft recommended to the Agency by a negotiated rulemaking committee consisting of divergent industry interests—including small employers—who would be affected by any changes to subpart R. Among these changes, addressing ironworker activity on walking and working surfaces is an innovative approach to safety that requires that coatings of structural members meet a standard for slip-resistance. Evidence from SENRAC meetings and elsewhere in the record point to the feasibility of this standard (see the discussion on this provision in Section IV, Summary and Explanation of the Rule). In this and other areas in the steel erection draft, the committee reached consensus on the language, thereby implicitly acknowledging the feasibility of the final revisions to the standard. Therefore, OSHA has determined that the final steel erection standard is technologically feasible.

OSHA developed estimates of the costs of compliance for construction employers subject to the final standard; OSHA's analysis is based on the preliminary economic analysis and additional data gathering and analysis. OSHA estimated annualized compliance costs for two compliance scenarios: (1) Costs to achieve compliance with OSHA's existing steel erection standard, and (2) costs to achieve compliance with the final standard. OSHA's cost estimates take into account the extent of current industry compliance, i.e., the extent to which employers are already in compliance with the requirements of OSHA's existing standard and with the requirements of the final steel erection standard. Accounting for these costs, i.e., subtracting them from the costs attributed to the final standard, is important because only those costs employers would actually incur to come into compliance with the final standard are properly attributed to that standard.

Table 4 presents OSHA's annualized compliance cost estimates, by provision or safety control, for establishments in the industries subject to the final standard.

TABLE 4.—ANNUALIZED COMPLIANCE COSTS OF THE FINAL STEEL ERECTION STANDARD BY INDUSTRY GROUP AND CONTROL [a]

[1998 dollars]

SIC	Industry group and size	Controls									Total
		Fall arrest systems	Personnel nets	Guardrails	Anchor rods (bolts)	Joist erection	Slip-resistant surfaces	Concrete curing tests	Training	Record-keeping	
152	General Building Contractors–Residential Buildings:										
	Establishments with 1–9 Employees	330,947	(119,016)	67,329	252,129	445,054	679,763	94,408	23,177	32,540	1,806,330
	Establishments with 1–99 Employees	188,427	(67,763)	38,334	143,551	253,395	387,028	53,752	13,196	18,527	1,028,447

TABLE 4.—ANNUALIZED COMPLIANCE COSTS OF THE FINAL STEEL ERECTION STANDARD BY INDUSTRY GROUP AND CONTROL [a]—Continued

[1998 dollars]

SIC	Industry group and size	Controls									Total
		Fall arrest systems	Personnel nets	Guardrails	Anchor rods (bolts)	Joist erection	Slip-resistant surfaces	Concrete curing tests	Training	Record-keeping	
	Establishments with 100+ Employees	395,642	(142,282)	80,491	301,417	532,056	812,647	112,863	27,708	38,901	2,159,442
	All Establishments	584,069	(210,045)	118,825	444,968	785,450	1,199,675	166,615	40,904	57,428	3,187,889
154	General Building Contractors–Nonresidential Buildings:										
	Establishments with 1–9 Employees	850,282	(305,781)	23,575	647,780	1,143,451	1,746,476	242,556	59,547	83,603	4,491,489
	Establishments with 1–99 Employees	2,870,887	(1,032,437)	79,598	2,187,159	3,860,739	5,896,787	818,964	201,055	282,276	15,165,028
	Establishments with 100+ Employees	1,414,816	(508,800)	39,227	1,077,865	1,902,629	2,906,024	403,598	99,083	139,110	7,473,551
	All Establishments	4,285,702	(1,541,237)	118,825	3,265,024	5,763,368	8,802,811	1,222,562	300,137	421,386	22,638,579
161	Highway and Street Construction, except Elevated Highways:										
	Establishments with 1–9 Employees	38,461	(13,831)	7,825	29,301	51,722	78,999	10,972	2,694	3,782	209,922
	Establishments with 1–99 Employees	98,173	(35,305)	19,973	74,792	132,022	201,647	28,005	6,875	9,653	535,835
	Establishments with 100+ Employees	38,363	(13,796)	7,805	29,226	51,590	78,797	10,944	2,687	3,772	209,386
	All Establishments	136,536	(49,101)	27,777	104,018	183,612	280,444	38,949	9,562	13,425	745,221
162	Heavy Construction, except Highway and Street Construction:										
	Establishments with 1–9 Employees	163,753	(58,889)	33,314	124,754	220,213	336,348	46,713	11,468	16,101	893,775
	Establishments with 1–99 Employees	615,174	(221,231	125,153	468,665	827,280	1,263,565	175,488	53,082	60,486	3,357,663
	Establishments with 100+ Employees	411,371	(147,939)	83,691	313,400	553,208	844,955	117,350	28,809	40,448	2,245,293
	All Establishments	1,026,546	(369,169)	208,844	782,065	1,380,488	2,108,520	282,838	71,891	100,934	5,602,956
171	Plumbing, Heating and Air-Conditioning:										
	Establishments with 1–9 Employees	50,397	(18,124)	10,253	38,394	67,773	103,515	14,376	3,529	4,955	275,069
	Establishments with 1–99 Employees	134,411	(48,337)	27,345	102,400	180,755	276,081	38,343	9,413	13,216	733,627
	Establishments with 100+ Employees	27,409	(9,857)	5,576	20,881	36,859	56,297	7,819	1,919	2,695	149,598
	All Establishments	161,820	(58,194)	32,921	123,281	217,614	332,378	46,162	11,333	15,911	883,225
174	Masonry, Stonework, Tile Setting, and Plastering:										
	Establishments with 1–9 Employees	43,691	(15,712)	8,889	33,286	58,756	89,742	12,464	3,060	4,296	238,470
	Establishments with 1–99 Employees	124,913	(44,922)	25,413	95,164	167,982	256,571	35,633	8,748	12,282	681,784
	Establishments with 100+ Employees	21,736	(7,817)	4,422	16,560	29,231	44,646	6,201	1,522	2,137	118,638
	All Establishments	146,649	(52,738)	29,835	111,724	197,213	301,217	41,834	10,270	14,419	800,422
175	Carpentry and Floor Work:										
	Establishments with 1–9 Employees	133,064	(47,853)	27,071	101,374	178,943	273,313	37,959	9,319	13,083	726,272
	Establishments with 1–99 Employees	245,389	(88,247)	49,923	186,947	329,997	504,028	70,001	17,185	24,128	1,339,349
	Establishments with 100+ Employees	32,739	(11,774)	6,661	24,942	44,027	67,246	9,339	2,293	3,219	178,693
	All Establishments	278,128	(100,021)	56,583	211,889	374,024	571,274	79,340	19,478	27,347	1,518,042
176	Roofing, Siding and Sheet Metal Work:										
	Establishments with 1–9 Employees	355,646	(127,899)	72,354	270,946	478,269	730,496	101,453	24,907	34,968	1,941,141
	Establishments with 1–99 Employees	899,629	(323,527)	183,024	685,375	1,209,812	1,847,834	256,633	63,003	88,455	4,910,237
	Establishments with 100+ Employees	86,461	(31,094)	17,590	65,870	116,273	177,591	24,664	6,055	8,501	471,913
	All Establishments	986,091	(354,621)	200,614	751,244	1,326,085	2,025,426	281,297	69,058	96,956	5,382,150
1791	Structural Steel Erection:										
	Establishments with 1–9 Employees	1,193,984	(429,384)	242,908	909,626	1,605,657	2,452,437	340,602	83,617	117,397	6,516,844
	Establishments with 1–99 Employees	5,312,751	(1,910,587)	1,080,844	4,047,472	7,144,533	10,912,364	1,515,543	372,064	522,369	28,997,353
	Establishments with 100+ Employees	1,372,439	(493,560)	279,214	1,045,580	1,845,642	2,818,983	391,509	96,115	134,943	7,490,864
	All Establishments	6,685,190	(2,404,147)	1,360,057	5,093,052	8,990,175	13,731,347	1,907,052	468,179	657,312	36,488,217
	All Significantly Affected Industry Groups:										
	Establishments with 1–9 Employees	3,160,225	(1,136,489)	493,517	2,407,589	4,249,838	6,491,087	901,502	221,318	310,725	17,099,312
	Establishments with 1–99 Employees	10,489,755	(3,772,356)	1,629,606	7,991,526	14,106,514	21,545,904	2,992,362	734,621	1,031,391	56,749,324
	Establishments with 100+ Employees	3,800,976	(1,366,918)	524,676	2,895,740	5,111,514	7,807,187	1,084,286	266,191	373,726	20,497,378
	All Establishments	14,290,731	(5,139,274)	2,154,281	10,887,266	19,218,028	29,353,091	4,076,648	1,000,812	1,405,117	77,246,701
	Other Affected Industry Groups [b]	80,910	(29,097)	769,533	61,641	108,807	166,189	23,081	5,666	7,955	1,194,685
	Total	14,371,641	(5,168,371)	2,923,815	10,948,907	19,326,835	29,519,280	4,099,729	1,006,478	1,413,072	78,441,386

Note: Figures in the table may not sum to totals due to rounding.

[a] Total compliance costs were distributed among industry groups according to the percentage of iron workers employed in that group (see Table 1). Within SIC groups, costs were distributed by share of revenue for firms in the size class.

[b] Other industries potentially affected by the final steel erection standard employ a small percentage of iron workers. These industry groups are: SIC 153, General Building Contractors—Operative Builders; and SIC 177, Concrete Work. Because firms in these industries are seldom involved directly in structural steel erection, OSHA has grouped them separately.

Source: U.S. Department of Labor, OSHA, Office of Regulatory Analysis.

OSHA projects that full compliance with the final standard will, after deducting costs incurred to achieve compliance with the existing standard, result in net (or incremental) annualized costs of $78.4 million for affected establishments. Among incremental annualized costs, expenditures for slip-resistant coatings of skeletal structural steel are expected to total $29.5 million, or 38 percent of total costs; expenditures for the safe design and erection of steel joists required by the final standard account for $19.3 million, or 25 percent of total costs; fall arrest systems account for $14.4 million, or 18 percent of total costs; and expenditures for anchor bolts necessary for structural stability account for $11.0 million, or 14 percent of total costs. Other control costs associated with compliance with the final steel erection standard are those for guardrails ($2.9 million); recordkeeping associated with administrative controls (1.4 million); and training ($1.0 million). In addition, OSHA anticipates that the expanded use of fall arrest systems in bridge erection will eventually lead to a dramatic reduction in the use of personnel safety nets on those projects, resulting in estimated cost savings of $5.2 million.

Potential Economic Impacts

OSHA analyzed the potential impacts of these compliance costs on prices, profits, construction output and other economic indices in the steel erection industry. In particular, OSHA examined potential economic impacts on establishments in SIC 1791, Structural Steel Erection, where the majority of the 57,000 structural metal workers are employed. This analysis shows that the final standard is economically feasible for these firms.

OSHA examined the potential economic impacts of the final standard by making two assumptions used by

economists to bound the range of possible impacts: the worst-case assumption of no-cost pass-through, *i.e.,* that employers will be unable to pass any of the costs of compliance forward to their customers, and the worst-case assumption of full-cost pass-through, *i.e.,* that employers will be able to pass all of the costs of compliance forward to their customers. As summarized in Table 5, below, OSHA estimates that, if affected firms in SIC 1791 were forced to absorb these compliance costs entirely from profits (a highly unlikely scenario), profits would be reduced by an average of 6.5 percent. If, at the other extreme, affected firms were able to pass all of these compliance costs forward to general contractors and project owners, OSHA projects that the price (revenue) increase required to pay for these costs would be less than 1 percent (0.40 percent). A price increase of 0.40 percent would have little, if any, effect on the choice between steel erection and other forms of building.

In addition to examining the economic effects of the final standard on firms in SIC 1791, OSHA estimated the impacts of the final standard on two other construction industry divisions involving steel erection: (1) The entire construction sector; and (2) construction activity where structural steel constitutes the physical core of the project, termed ''steel-frame construction'' by OSHA.

For the dollar value of business for the entire construction sector, OSHA totaled 1996 sales data for SICs 15, 16, and 17 provided in a Dun & Bradstreet national business database [D&B, 1996a]. OSHA derived pre-tax income (Column 2 in Table 5) for the construction sector by, first, calculating industry profit using Dun & Bradstreet data on post-tax return on sales (post-tax profits) and, second, applying a formula that converts post-tax income to pre-tax income based on tax rates in the U.S. corporate tax code. OSHA found that, for the construction sector as a whole, price impacts under full cost pass-through would be 0.01 percent, and profit impacts assuming no cost pass-through would be 0.2 percent. Thus in the context of the construction sector as a whole, the final standard would have little impact.

TABLE 5.—POTENTIAL ECONOMIC IMPACTS OF THE FINAL STEEL ERECTION STANDARD ON SELECTED SECTORS WITHIN THE CONSTRUCTION INDUSTRY

[Under Worst-Case Conditions, 1996 Revenue and Profit Data]

	Dollar value of business (a) ($millions)	Pre-tax income (b)($millions)	Compliance costs as a percent of revenue (c)	Compliance costs as a percent of profit (c)
SIC 1791, Structural Steel Erection	9,285.7	562.4	0.39	6.49
Construction Sector as a Whole	768,155.9	43,839	0.01	0.18
Steel-Frame Construction (d)	119,979.2	6,847.2	0.07	1.15

(a) Based on data from Dun & Bradstreet, National Profile of Businesses, 1996.

(b) Based on data from Dun & Bradstreet, National Profile of Businesses, 1996; Dun & Bradstreet, Industry Norms and Key Business Ratios, 1996; and OSHA profit calculations.

(c) Revenue and profit impacts were calculated by dividing annual compliance costs for each of the four construction sectors shown in the table by, respectively, the dollar value of business and pre-tax income. Compliance costs assigned to these sectors are based on total costs of $78.4 million and were applied as follows: construction sector as a whole—$78.4 million; steel-frame construction—$78.4 million; and SIC 1791, Structural Steel Erection—$36.5 million.

(d) Steel-Frame Construction is defined by OSHA as the body of construction projects where steel framing constitutes the physical core of the structure. The dollar value of business and pre-tax income for Steel-Frame Construction were computed by applying the percentage of the value of the steel market share (15.6 percent), excluding that for tanks and towers, of all construction starts to the dollar value of business and pre-tax income for the entire construction sector. Data on the steel market share for 1995 are based on memoranda to OSHA from Construction Resources Analysis, College of Business Administration, University of Tennessee, Knoxville [Exs. 9–143 and 9–144].

Source: U.S. Department of Labor, OSHA, Office of Regulatory Analysis.

OSHA calculated the value of steel-frame construction using data provided by the Construction Resources Analysis office of the University of Tennessee, College of Business Administration on the value of the steel market share of the entire construction industry. In this calculation, OSHA applied the percentage of the value of the steel market share (15.6 percent), excluding that for tanks and towers, of all construction starts to the dollar value of business and pre-tax income for the entire construction sector, thereby eliminating all non-steel construction (as defined in the final standard) from the earnings total. Price increases for steel frame construction as a whole are of particular interest because they represent the price increases to the ultimate customers of steel erection services, the purchasers of buildings, bridges, etc. Under the worst-case price increase scenarios, the price of such projects would increase by 0.1 percent. It is exceedingly unlikely that a customer would fail to go ahead with a project as a result of a price increase of this magnitude.

OSHA believes that, prior to the generation of the cost savings projected to accrue from implementation of the standard, most steel erectors will handle the increase in direct costs by increasing their prices somewhat and absorbing the remainder from profits. Within steel erection markets, the particular blend of impacts experienced by a given firm will depend on the degree of competition with concrete erection and other alternative types of construction in the firm's local market area. Although these minimal economic impacts would be felt by most affected employers after implementation of the standard, OSHA anticipates—based on testimony by members of SENRAC and other industry representatives whose current fall protection programs and other safety measures mirror those required by the final standard [Exs. 6–3, 6–8, and 6–10]—that offsetting cost savings will at least partially reverse any negative economic impacts.

Regulatory Flexibility Screening Analysis

The Regulatory Flexibility Act of 1980 (RFA), as amended in 1996 (5 U.S.C. 601 *et seq.*), requires regulatory agencies to determine whether regulatory actions will have a significant impact on a substantial number of small entities. Pursuant to the RFA, OSHA has assessed the potential small-business impact of the final steel erection standard under two worst-case scenarios. On the basis of a regulatory flexibility screening assessment and the

underlying data, summarized below, OSHA has determined that the final standard will have a significant impact on a substantial number of small entities. Thus, OSHA has conducted a full Final Regulatory Flexibility Analysis, as required. OSHA's Final Regulatory Flexibility Analysis follows the screening analysis presented in this section.

The Small Business Administration defines small entities, or ''concerns,'' in terms of the number of employees or the annual receipts of establishments in affected sectors. For employers in SIC 17, small concerns are defined by SBA as those with $7.0 million or less in annual receipts. OSHA has estimated that in SIC 1791, Structural Steel Erection, based on 1998 data from Dun & Bradstreet (D&B) and using D&B's estimate of the dollar value of business to represent annual receipts, the class of establishments with 99 or fewer employees comes closest to the class of firms qualifying as small concerns under the SBA definition. Not all firms in this class would have annual receipts of less than $7.0 million; however, OSHA has conservatively chosen to overestimate the number of small firms rather than try to extrapolate the number of small firms from the limited data available. Establishments with 99 or fewer employees represent 98.4 percent of the 4,675 establishments and employ 75.4 percent of the 55,965 workers in SIC 1791, according to Dun & Bradstreet's national market profile [D&B, 1998].

In this regulatory flexibility screening analysis, OSHA assessed the impacts of compliance costs within the industry group with the largest concentration of affected employers and employees, SIC 1791, Structural Steel Erection. According to data from the Bureau of Labor Statistics, of the approximately 57,000 iron workers in construction, roughly 26,000 are employed in SIC 179, Miscellaneous Special Trade Contractors. OSHA believes that the great majority of these workers are found in SIC 1791, Structural Steel Erection, because the other industries in SIC 179 (glass and glazing, excavation work, wrecking and demolition, installation and erection of building equipment (such as installing elevators, revolving doors and industrial machinery and specialty trade contractors not elsewhere classified) are unlikely to employ significant numbers of iron workers. This contention is supported by the fact that available data on iron worker deaths (see Table III–2 in the final economic analysis) show that SIC 1791 accounted for roughly 90 percent of iron worker deaths in SIC 179 in 1994–98. Total employment for all trades in SIC 1791 is 55,965 workers, according to Dun & Bradstreet [D&B, 1998]. BLS and D&B data indicate that iron workers constitute roughly 47 percent of the labor force in SIC 1791, the largest concentration of iron workers in any four-digit group where iron workers are employed. In addition, only firms in SIC 1791 earn the majority of their revenues from steel erection. (According to the definitions used in the SIC system, this means that firms that do steel erection but are classified in other sectors earn only a minority of their total revenues from their steel erection business.)

Compared with all other industry groups in the construction industry, firms in SIC 1791 have the greatest number of iron workers per firm and the highest percentage of iron workers relative to total employment. Since the costs of compliance are approximately proportional to the number of iron workers in a given firm, establishments in SIC 1791 will experience the greatest economic impact.

In this analysis of impacts, OSHA estimated the costs of compliance for SIC 1791 by applying the percentage of iron workers in that industry group, presented in Table 1, to the total costs estimated for all affected industry groups in construction. According to the 1998 BLS employment survey [BLS, 1998], SIC 179, Miscellaneous Special Trade Contractors, employs approximately 47 percent of the 56,840 iron workers in the entire construction sector. Assuming that most, if not all of the iron workers in SIC 179 are employed in SIC 1791, OSHA estimates that 47 percent of the iron workers in construction are employed in SIC 1791. OSHA estimates that, in general, compliance costs under the final standard are proportional to employment. Thus, compliance costs in SIC 1791 can be approximated by applying to total costs the percentage of iron workers (47 percent) in SIC 1791. Therefore, OSHA estimates that if net annual costs for all of construction will be $78.4 million, then net annual costs in SIC 1791 will be 47 percent (46.5 percent before rounding) of total costs, or $36.5 million.

To assess the possible economic impacts of the final standard on small firms in SIC 1791, OSHA distributed compliance costs within size classes according to an estimate of the percent of revenue (gross sales) earned by establishments within those size classes. Applying Dun & Bradstreet revenue figures, OSHA has determined that costs represent less than one percent (0.40 percent after rounding) of revenues for firms with 99 or fewer employees, so that under the extreme case of full-cost pass-through to consumers, prices would rise by no more than one percent (see Table 6, below). Similarly, for the very smallest firms, those with fewer than ten employees, price impacts are projected to be low: 0.40 percent after rounding.

TABLE 6.—POTENTIAL ECONOMIC IMPACTS OF THE FINAL STEEL ERECTION STANDARD ON SMALL FIRMS IN THE STEEL ERECTION INDUSTRY UNDER WORST-CASE CONDITIONS

[1996 Revenue and Profit Data]

	Annual compliance costs (a) ($millions)	Compliance cost per establishment [a]	Dollar value of business [b] ($millions)	Revenue per establishment [b]	Pre-tax income [c] ($millions)	Pre-tax income per establishment [c]	Compliance costs as a percent of revenue	compliance costs as a percent of profit
SIC 1791,Structural Steel Erection	36.5	8,175.7	9,285.7	2,080,606.0	562.4	126,024.2	0.39	6.49
SIC 1791, 1–99 Employees	25.0	5,758.8	6,369.2	1,465,541.8	395.8	91,074.8	0.39	6.32
SIC 1791, 1–9 Employees	8.9	2,866.7	2,260.8	729,530.4	95.8	30,898.0	0.39	9.28

[a] Based on Table 4 and data on number of establishments from Dun & Bradstreet, National Profile of Businesses, 1996. Compliance costs for size groups were derived by applying the percentage of revenue in the size groups to total costs for all of SIC 1791.

[b] Based on data from Dun & Bradstreet, National Profile Businesses, 1996.

[c] Based on data from Dun & Bradstreet, National Profile of Businesses, 1996; Dun & Bradstreet, Industry Norms and Key Business Ratios, 1995–96; and OSHA profit calculations.

Source: U.S. Department of Labor, OSHA, Office of Regulatory Analysis.

Under the alternate scenario of full-cost profit absorption (an extremely unlikely scenario) among steel erection contractors with 99 or fewer employees, profit impacts would be 6.3 percent; for firms with one to nine employees, profit impacts would be 9.3 percent. Thus, costs as a percentage of profits and revenues for SIC 1791 are lower when a small entity is defined to include all firms within the SBA size standards (less than $7 million in revenue) than for small entities employing fewer than 10 workers. The difference in these projected profit impacts for the two smaller size categories of firms reflects a difference in the 1995–96 profit rates for the two groups [D&B, 1996b] applied by OSHA in this impacts analysis: (1) an average 3.6 percent rate of net-profit-after-tax-to-net-sales for establishments with fewer than ten employees (roughly defined as those with assets of less than $250,000) and (2) an average 4.9 percent post-tax profit/sales ratio for establishments with one to ninety-nine employees (roughly defined as those with assets of $250,000 to $1 million) (see Chapter VI in the final economic analysis for further explanation).

OSHA believes that most small erectors will, along with the rest of the industry, receive economic benefits from compliance with the final rule that will serve to significantly offset any direct cost impacts. As noted above, employer representatives on the committee and at the public hearing commented on numerous occasions that the safety program implicit within the final standard is compatible with maintaining a profitable business operation, and that such a program would, in fact, improve profitability and competitiveness [Exs. 6–3; 6–8; 6–10; 202X, pp. 99, 119; 206X, pp. 274–275]. Therefore, OSHA anticipates that most small entities will experience minimal economic impacts as a result of implementation of the final standard. However, since compliance costs under the worst-case scenario exceed 5 percent of profits in some of the industries affected, OSHA's internal guidelines with respect to the Regulatory Flexibility Act require the Agency to conduct a full Final Regulatory Flexibility Analysis.

Regulatory Flexibility Analysis

The Regulatory Flexibility Act, as amended in 1996, requires that a Final Regulatory Flexibility Analysis contain the following elements:

(1) A succinct statement of the need for and objectives of the rule;

(2) A summary of the significant issues raised by public comments in response to the initial regulatory flexibility analysis, a summary of the Agency's assessment of such issues, and a statement of any changes made to the rule as a result of such comments;

(3) A description and an estimate of the number of small businesses to which the rule will apply or an explanation of why no such estimate is available; and

(4) A description of the projected reporting, recordkeeping and other compliance requirements of the rule, including an estimate of the classes of small entities that will be subject to the requirements and the type of professional skills necessary for preparation of the report or record.

In addition, a Regulatory Flexibility Analysis must contain a description of the steps the Agency has taken to minimize any significant economic impacts on small entities consistent with the stated objectives of applicable statues, including a statement of the factual, policy and legal reasons for selecting the alternative adopted in the final rule, and the reasons for rejecting each of the other significant alternatives [SBA, 2000].

Reasons for the Final Rule

According to OSHA's analysis of accident data for an eleven-year period (1984–1994), 319 fatalities involved hazardous conditions that are addressed by OSHA's current and revised steel erection standard (for details, see Chapter III, Risk Assessment and Benefits, and Appendix B of the preliminary economic analysis). Based on a review of BLS injury census data for the period 1994–98, OSHA estimates that an average of 35 fatalities and 2,279 lost-workday injuries annually involve circumstances that would be addressed by provisions in the final OSHA steel erection standard. For an industry with an estimated work-force of only 56,840 workers, these fatality and injury levels clearly demonstrate that the risk confronting these workers is significant. Therefore, OSHA has developed final regulatory text that is designed to address this risk.

Objectives of the Final Rule

The objective of this final standard is to reduce the risk of occupational exposure to a variety of hazards on steel erection construction worksites, such as those involving falls, slips, trips, being struck by or crushed by objects or loads, and structural collapses. These occupational hazards will be reduced by this final rule through the use of engineering controls, work practice controls, inspections of worksite conditions, training, communication, and recordkeeping. Implementation of these measures has been shown to minimize or eliminate occupational exposure to these hazards during the erection of steel structures and thus to reduce the risk of injury or death among workers.

Significant Issues Raised in the Initial Regulatory Flexibility Analysis

Among the issues raised in the notice of proposed rulemaking and in the initial regulatory flexibility analysis, the most significant concerned the impact of the proposed standard on small fabricators of structural steel members, including shops that fabricate open web steel joists and that complete the final detailing and coating of other structural steel members. These firms would be affected by provisions in the final rule that require joists, columns, and girders to arrive at the site meeting certain design specifications. For example, joists erected in bays of 40 feet or greater must be designed for bolting in the final connection of joists to the permanent structure. Therefore, all joist fabricators who produce joists that meet this criterion must drill or punch holes in appropriate locations on the joists to allow for bolting at the site.

In the pre-proposal period and during the hearing, the Steel Joist Institute argued that some small firms may lack the equipment to prepare joists as required by the standard, and that as a result such firms could be severely impacted (*see,* for example, Ex. 204X, pp. 60–63). However, buildings requiring joists of over 40 feet in length represent only a portion of the total market. In the Preliminary Economic Analysis, OSHA suggested that, to the extent that there are small firms lacking suitable equipment, such firms could still produce fabricated steel for a variety of steel erection projects and for portions of other projects. As a result, in that analysis, OSHA did not anticipate a significant impact, if any, on those firms that lack the proper equipment to prepare joists of greater than 40 feet for bolting.

In the Initial Regulatory Flexibility Analysis, OSHA solicited comment on two issues: (1) Whether there are small firms lacking suitable equipment to prepare joists in the manner prescribed by the rule; and (2) the percentage of the steel framing market that requires the use of joists of greater than 40 feet in length. In response, the Steel Joist Institute (SJI) presented cost data to demonstrate that the proposed requirement for bolt holes would severely impact the joist manufacturing industry. SJI stated that production costs for the industry as a whole could rise by as much as 11 percent after the

rule is promulgated and joist fabricators are required to drill and punch holes in the joists (Ex. 204X, p. 62). The American Institute of Steel Construction echoed these concerns about the economic impacts of the proposed joist requirements (Ex. 13–209).

As a result of these concerns, OSHA examined the impact of the final standard on the fabricated structural metal industry (SIC 3441), which produces iron and steel for structural purposes such as the construction of bridges and buildings, even though these employers are not affected employers under the OSH Act. This sector would need to bore holes in joists greater than 40 feet in length so they can be bolted rather than welded (§ 1926.757). In addition, this sector would need to supply seats or equivalent connection devices for double connections (§ 1926.756); supply holes or other devices attached to perimeter columns to permit installation of perimeter safety cables (§ 1926.756); provide a vertical stabilizer plate on each column for steel joists (§ 1926.757); and ensure, through approved test methods, that paint coatings on top surfaces of structural steel members achieve a minimum average slip resistance (§ 1926.754).

OSHA's impact analysis assumes that this sector would bear all of the costs associated with these provisions of the final standard concerning open web joists, slip resistance of skeletal structural steel, column connections for perimeter safety cables and double connections. In fact, however, because of contractual arrangements among fabricators, steel erectors and building owners, most of the costs borne by the fabricators affected by this provision would be transmitted through steel erectors to building owners and would appear in the bid price of the project or would be incurred as onsite costs.

For purposes of this analysis, OSHA has defined small firms in the fabricated structural metal industry using the SBA definition of small firms: firms with fewer than 500 employees. Department of Commerce data show that there were 2,891 small firms in this sector in 1997. (Small firms represented 99.7 percent of all firms). Department of Commerce data also show that these small firms had total revenues of over $13.3 billion, over 80 percent of all industry revenues. Dun and Bradstreet data show that in fiscal year 1995, the median profits for firms in this sector were a healthy 3.5 percent of sales. Small firms were assumed to bear costs in proportion to their revenues. OSHA has not estimated costs to small fabricators for the design, engineering, testing, and manufacture of the special devices and coatings that will be supplied to steel erectors to enable them to achieve compliance with the final standard. However, OSHA anticipates that even if all of the costs of these provisions of the standard are borne by the fabricated structural metal industry, these costs will represent only a small percentage (0.37 percent) of revenues and 10.5 percent of profits for small firms in this sector (if all compliance costs were absorbed from profits, a highly unlikely scenario). Thus, OSHA finds that the costs of the standard will not cause a significant impact on small firms in this sector.

On the other hand, other speakers at the hearing who have field experience on this issue testified that the bolted joist provision could lead to cost savings by reducing the exposure time of workers who would otherwise be welding the connection (Ex. 208X, pp. 211, 252). After weighing this offsetting evidence, the Agency has concluded that in the fabricated structural metal industry, any additional production costs—and associated increases in prices for materials used by steel erectors—are likely to be offset, at least to some extent, by cost savings and benefits (fatalities and injuries avoided) in the industry—structural steel erection—directly affected by the rule. Therefore, OSHA believes that the provision is justified. In this preamble to the final rule, OSHA makes similar arguments for the other provisions in the standard, discussed above, that impact parties that are indirectly affected by the standard. In sum, OSHA finds that these provisions of the final rule are essential for the comprehensive safety program envisioned by this final steel erection standard.

In another example of a provision in the final rule where smaller entities connected to the steel erection industry would be affected by design criteria, § 1926.754 of the final standard specifies that coatings of structural steel members must achieve a minimum average slip resistance—with documentation or certification that the standard has been reached, based on an appropriate test method—before workers are permitted to walk the top surface of the steel member. Thus, all fabricators who coat steel members before shipping to the site would need to certify that the steel members meet the slip resistance standard. It is also possible that there may be impacts on small paints and coatings manufacturers. OSHA anticipates that the most likely scenario is that costs of friction resistant coatings will be passed forward to fabricators, and, in turn, to steel erection firms.

OSHA has examined the technological and economic implications of these and other issues raised in the rulemaking that affect smaller entities and has addressed any concerns about inequitable regulatory impacts on those entities in this preamble to the final standard and in the final economic analysis. In sum, based on comment in the record, OSHA finds that, although some smaller firms may experience impacts as a result of the design specifications in the final rule, these cost impacts can generally be passed forward to intermediate and final customers in the market—that is, the steel erectors, general contractors, owners and tenants of the building project—in such a way as to minimize impacts on the market share of smaller fabrication shops. Furthermore, OSHA believes that technological developments and market innovations will help to smooth the transition to the new market environment created by the final rule. For additional discussion of these technological and economic issues and their small-firm implications, see IV. Summary and Explanation of the Final Rule in this preamble and Chapter IV, Technological Feasibility, in the final economic analysis.

Description of the Number of Small Entities

For this rulemaking, OSHA has identified the population at risk of injury in the construction workforce and the industry groups where steel erection is conducted, but cannot with certainty estimate the number of small entities to which the final rule will apply because some firms even in SIC 1791 often perform work unrelated to steel erection and some firms in other SICs occasionally do steel erection work. There were no comments in the record that directly addressed this question. In SIC 1791, Structural Steel Erection, where the majority of iron workers are employed, there are roughly 4,544 establishments defined as small by the SBA, *i.e.,* these entities earn less than $7 million in annual revenue. If all establishments in SIC 1791 were affected by the final standard, then small entities would comprise 97 percent of all affected entities, using the SBA size standard. There are 3,898 very small establishments, i.e., those employing fewer than 20 employees in SIC 1791; these very small establishments comprise 83 percent of all establishments in the industry.

Description of the Reporting, Recordkeeping and Other Compliance Requirements of the Final Rule

The final rule would require, in the following provisions, that employers establish and maintain records for the use of engineering controls, work practices, inspections, and training:

- Site layout, site-specific erection plan, and construction sequence;
- Hoisting and rigging;
- Structural steel assembly;
- Open-web steel joists; and
- training.

Most steel erection employers would be affected by the reporting and recordkeeping requirements in these sections. In estimating the cost of establishing and maintaining the records for each of these control areas, OSHA used the wage rate of the applicable professional personnel. To give two examples: (1) For the cost of certifying that lift rigging meets manufacturer's specifications, OSHA applied the wage rate for an ironworker supervisor; and (2) for the costs of documenting alternative methods for joist erection, OSHA applied the wage rates of a project manager and a structural engineer. All recordkeeping requirements included in the final rule could be performed by existing staff in any of the covered industries. A detailed description of the recordkeeping requirements appears in Chapter II, Industry Profile, and in Chapter V, Costs of Compliance, of this final economic analysis.

Relevant Federal Rules

In this final rule, OSHA is revising the current safety standard for steel erection that has been in place with little change for nearly 30 years. OSHA believes that this thorough and comprehensive revision to existing subpart R will provide greater protection and eliminate ambiguity and confusion, thereby improving safety in this important segment of the construction industry. There are no other federal workplace rules or guidelines that overlap with the OSHA steel erection standard.

Significant Alternatives Considered

Through its deliberations, the Negotiated Rulemaking Committee considered alternatives to many of the provisions of the final standard. Several of these, and the Committee's choices with respect to them, are discussed below. For example, the final standard features, wherever possible, performance language that permits maximum flexibility for achieving safety outcomes. In the area of site-specific plans, the final rule provides an opportunity to those employers who select alternative means and methods for complying with certain sections of the standard, and to incorporate these alternatives into a site-specific erection plan. OSHA considered small contractors when it elected not to propose a universal requirement for a site-specific erection plan for all steel erection sites. Instead, the final standard provides guidelines for establishing a site-specific erection plan in a non-mandatory appendix to assist employers who choose to develop such a plan, as recommended by SENRAC.

Other areas of the final standard that involve the consideration of alternatives and are responsive to small contractors include rules for the safe use of cranes and other lifting equipment and the proper assembly of metal buildings other than those constructed of heavy structural steel. In light of the number of small steel erectors potentially affected by the hoisting and rigging section of the final standard, OSHA has attempted to minimize the burden of the pre-shift visual crane inspections by having the inspection checklist apply only to the most essential safety elements, as recommended by SENRAC. Additionally, since there are a large number of small builders who erect pre-engineered metal structures exclusively, OSHA determined that a separate section in the final standard dedicated to this type of steel erection would ease compliance for small erectors.

The Regulatory Flexibility Act emphasizes the importance of performance-based standards for small businesses. For example, in § 1926.760, Fall Protection, employers are required to protect certain employees exposed to fall distances of 15 feet or greater. Paragraph (a)(1) of § 1926.760 lists the types of general safety systems—*i.e.,* guardrail systems, safety net systems, personal fall arrest systems, positioning device systems or fall restraint systems—that must be used by employers to provide fall protection to their employees. However, the standard does not mandate particular engineering solutions by structure type, site location, crew size, or other criteria. Employers are free to select any one system or combination of systems that is most compatible with company practice and employee protection so long as the performance measure—fall protection at 15 feet—is achieved.

As another example of OSHA's concern for the potential impacts on small businesses, the final standard minimizes recordkeeping burden where training, notifications, and other forms of communication are required, as recommended by SENRAC. Regarding training provisions, general instruction in fall hazards is mandated for all employees exposed to that risk, but the scope of additional special training is limited to three particularly hazardous activities: multiple lift rigging, connecting, and decking. Employers are to ensure that the training is provided but do not have to document or certify the program. Other requirements where communication will be necessary, including those involving field curing of concrete footings and modification of anchor bolts, were written in such a way as to limit the notifications to cover only the most essential information. Supplementary explanatory materials, presented in appendices to the standard, are intended to assist employers in complying with the rule and otherwise providing a safer workplace.

Another approach recommended by the Regulatory Flexibility Act is compliance date phase-ins for small businesses. Throughout their deliberations, the negotiated rulemaking advisory committee recognized the importance of effective outreach to the steel erection community prior to and following promulgation of the standard. In fact, as stated by a committee member prior to the issuance of the proposed standard, many employers in the industry are aware of, and have already begun to align their safety programs with, the standard (Ex. 9–156). With the exception of the requirement addressing slip resistance of skeletal structural steel (the date for mandatory compliance with this provision is five years after the effective date of the standard), the standard as a whole becomes effective within 180 days. OSHA believes that any compliance extensions for affected employers, including small employers, would only marginally ease the economic burden, given the progress in occupational safety already underway throughout industry and the non-capital-intensive nature of the rule, and would delay unnecessarily the protection of workers who would otherwise benefit from compliance with the rule.

In sum, throughout the process of negotiated rulemaking and during the period leading to this notice of final rulemaking for OSHA's steel erection standard, alternatives that would benefit small employers were considered and addressed on a routine basis. After considering a number of alternatives and adopting those that were consistent with the mandate imposed by the OSH Act, OSHA has developed a final rule that would minimize the burden on small employers, while maintaining the level of worker protection mandated by the OSH Act.

Non-Regulatory Alternatives

The primary objective of this final standard on structural steel erection is to minimize the number of construction worker injuries and fatalities. To develop this standard, OSHA employed negotiated rulemaking using an advisory committee composed of representatives from the construction industry (both labor and management and both small and larger firms), the insurance industry, the engineering field, and Federal and State government regulatory and research agencies. OSHA itself was also a member of the committee.

OSHA also examined throughout this rulemaking a number of non-regulatory approaches to enhancing workplace safety, including the operation of the classical free market, the tort liability insurance system and the workers' compensation insurance system. OSHA has concluded that these social and economic alternatives to a Federal workplace standard fail to adequately protect workers from the hazards associated with structural steel erection in the construction industry. The private market offers economic signals that could have the potential to direct workers toward desirable combinations of risk and reward. However, market imperfections and social and economic institutions—such as limitations to mobility, accumulated benefits, and social welfare programs—prevent workplaces from achieving the most optimal safety outcomes, creating inefficient, inadequately compensated risks for workers. Tort liability laws and workers' compensation provide some protection, but fall far short of fully compensating injured employees for the loss of wages, the medical costs, and the legal and other costs resulting from workplace accidents. Furthermore, these approaches are inherently reactive, rather than proactive, and largely fail to introduce progressive safety programs at all levels of industry. Therefore, OSHA finds that this final revision to the steel erection standard provides the necessary remedy.

Sources

CONSAD Research Corporation. [CONSAD, 1996] ''Formula for Calculating Pre-Tax Profits from Post-Tax Profits.'' Electronic mail transmittal to OSHA, Office of Regulatory Analysis. November 7, 1996.

Dun & Bradstreet. [D&B, 1998] National Profile of Businesses statistical software. Dun & Bradstreet Information Services, Falls Church, Va. 1998.

Dun & Bradstreet. [D&B, 1996a] National Profile of Businesses data software. Dun & Bradstreet Information Services, Falls Church, Va. 1996.

Dun & Bradstreet. [D&B, 1996b] Industry Norms and Key Business Ratios. Dun & Bradstreet Information Services, Murray Hill, N.J. 1996.

Executive Office of the President. [EO 12866] Executive Order on Regulatory Planning and Review. Executive Order 12866. September 30, 1993.

U.S. Department of Labor, Bureau of Labor Statistics. [BLS, 1998] Occupational Employment Statistics Survey. Office of Employment Projections. 1998.

U.S. Department of Labor. Occupational Safety and Health Administration. [OSHA, 1998] Preliminary Economic and Initial Regulatory Flexibility Analysis of OSHA's Proposed Revision to the Steel Erection Standard (29 CFR Part 1926.750–.761). OSHA, Directorate of Policy, Office of Regulatory Analysis. Washington, D.C., August 1998. Docket S–775, Ex. 11.

U.S. Small Business Administration. [SBA, 2000] Small Business Regulatory Enforcement Fairness Act of 1996. Internet site: *http://www.sba.gov/regfair/news/index.html* September 2000.

VI. Environmental Assessment

The final rule has been reviewed in accordance with the requirements of the National Environmental Policy Act (NEPA) of 1969 (42 U.S.C. 4321 *et seq.*), the regulations of the Council on Environmental Quality (CEQ) (40 CFR part 1500), and DOL NEPA Procedures (29 CFR part 11). The provisions of the standard focus on the reduction and avoidance of accidents occurring during structural steel erection. Consequently, no major negative impact is foreseen on air, water or soil quality, plant or animal life, the use of land or other aspects of the environment.

VII. Federalism

Executive Order 13132, ''Federalism,'' (64 FR 43255; Aug. 10, 1999), sets forth fundamental Federalism principles, Federalism policymaking criteria, and provisions for consultation by Federal agencies with State or local governments when policies are being formulated which potentially affect them. The Order generally requires that agencies, to the extent possible, refrain from limiting State policy options; consult with States prior to taking actions that would restrict State policy options; and take such action only when there is clear constitutional authority and the presence of a problem of national scope. Executive Order 13132 also provides that agencies shall not promulgate regulations which have significant Federalism implications and impose substantial direct compliance costs on State or local governments, unless the agency consults with State and local officials early in the process of developing the proposed regulation and provides a summary Federalism impact statement in the preamble of the final rule. Finally, the Order provides for preemption of State law only if there is a clear Congressional intent for the agency to do so, and provides that any such preemption is to be limited to be limited to the extent possible.

Executive Order 13132 required agencies to have in place by January 31, 2000 an intergovernmental consultation process for proposed regulations with Federalism implications; the Steel Erection standard was published for public comment prior to that date, on August 13, 1998, and accordingly was not subject to the new consultation procedure.

Among the Federalism policy criteria addressed by Executive Order 13132 is the principle that national action limiting the policymaking discretion of the States shall be taken only when ''national activity is appropriate in light of the presence of a problem of national significance.'' Since many steel erection-related injuries and fatalities are reported every year in every State and since the hazards of steel erection work are present in workplaces in every State of the Union, steel erection hazards are clearly a national problem. The final standard on steel erection is written so that employees in every State will be protected by the standard. To the extent that there are any State or regional peculiarities, States with occupational safety and health plans approved under section 18 of the OSH Act can develop their own comparable State standards to deal with any special problems.

In short, there is a clear national problem related to occupational safety and health for employees exposed to MSD hazards in the workplace. Any steel erection standard developed by States that have elected to participate under section 18 of the OSH Act would not be preempted by this final rule if the State standard is determined by Federal OSHA to be ''at least as effective'' as the Federal standard.

Another policy criterion expressed in the Executive Order is that ''regulatory preemption of State law shall be restricted to the minimum level necessary to achieve the objectives of the statute pursuant to which the

regulations are promulgated.'' The preemptive effects of the final steel erection standard upon the States are determined by the OSH Act itself: as an occupational safety and health standard issued under section 6(b) of the Act, the standard preempts any State or local law which regulates the issue of workplace steel erection protection. *Gade* v. *Nat'l Solid Waste Management Ass'n,* 505 U.S.C. 88 (1992). However, neither the OSH Act nor this standard completely displace State responsibilities which relate to steel erection injuries and fatalities in the workplace; pursuant to section 4(b)(4) of the OSH Act, State laws and programs which address the rights of employers or employees with respect to injuries or illnesses arising out of employment, including State worker compensation programs, are not subject to preemption under the OSH Act. Moreover, under section 18(b) of the Act, any State which wishes to assume responsibility for adopting and enforcing safety or health standards on issues addressed by OSHA standards may do so by submitting and obtaining Federal OSHA approval of a State plan under 18(b) of the Act; among other things, the State plan must include standards which are ''at least as effective as'' those of Federal OSHA. Accordingly, OSHA finds that the final steel erection standard is consistent with the policies set forth in Executive Order 13132 relating to preemption of State laws.

Section 6(b) of the Executive Order provides that agencies shall not issue regulations which impose ''substantial direct compliance costs'' on State or local governments without consulting with State and local officials early in the process of developing the proposed regulation, and without including in the preamble to the final rule a Federalism impact statement. The OSH Act specifically exempts workplaces maintained by States or their political subdivisions from coverage under Federal safety and health standards issued by OSHA, and accordingly nothing in the steel erection standard requires any compliance expenditure by State or local governments. However, 18(c)(6) of the Act requires any State which administers an OSHA-approved State plan to apply the same State occupational safety or health standards applied to private-sector employers to workplaces maintained by State and local government. Slightly under one-half the States and Territories have chosen to implement State plans and enforce ''at least as effective'' State health and safety standards to public sector workplaces. Thus, State and local employers in States which have elected to administer approved State plans will likely incur roughly comparable compliance costs, and will likely attain comparable benefits in the form of reduced injuries and compensation costs, as employers directly subject to the Federal steel erection standard. These costs of complying with State safety regulations are not ''direct'' costs which trigger the application of 6(b) of the Executive Order. Moreover, compliance costs to protect public workers under an approved State plan do not constitute an unfunded Federal mandate under the Unfunded Mandates Relief Act, which does not apply to Federal programs where State participation is voluntary, see 2 U.S.C. 658(5) and 1502.

In summary, the final steel erection standard imposes no substantial direct impact on State or local governments; it indirectly affects State or local employers only in States which have chosen to administer Federally-approved State plans. The final standard contains no special preemption provisions, and preempts State steel erection requirements only to the extent provided by Congress in the OSH Act for any section 6 standard. So therefore the rule does not have Federalism implications as defined in the Executive Order.

The Assistant Secretary certifies that OSHA has complied with applicable requirements of E.O. 13132 in preparing the final steel erection standard. State comments were invited on the proposed rule, and were fully considered in the development of this final rule.

VIII. Unfunded Mandates

For the purposes of the Unfunded Mandates Reform Act of 1995, as well as Executive Order 12875, this rule does not include any Federal mandate that may result in increased expenditures by State, local, and tribal governments, or increased expenditures by the private sector of more than $100 million in any year.

IX. OMB Review Under the Paperwork Reduction Act

Under the Paperwork Reduction Act of 1995, agencies are required to seek OMB approval for all collections of information. As a part of the approval process, agencies are required to solicit comment from affected parties with regard to the collection of information, including the financial and time burdens estimated by the agencies for the collection of information.

This final rule contains collections of information as defined in OMB's regulations at 60 FR 44978 (August 29, 1995) in § 1926.752(a)(1), § 1926.752(a)(2), § 1926.753(c)(5), § 1926.753(e)(2), § 1926.754(c)(3), § 1926.757(a)(4), § 1926.757(a)(7), § 1926.757(a)(9) § 1926.757(e)(4)(i), § 1926.758(g), and § 1926.761. OSHA's rationale for the need to collect information is set forth in the discussion of each of these provisions in Section IV of this preamble.

OSHA solicited comment from the public on all aspects of these collections of information, but the Agency received no comments. In accordance with the Paperwork Reduction Act of 1995 (44 U.S.C. 3501–3520), OSHA requested Office of Management and Budget (OMB) approval of the collections of information described above. OMB has granted approval of the information requirements under OMB Control Number 1218–0237. The approval expires on October 31, 2001.

X. State Plan Standards

The 25 States and territories with their own OSHA approved occupational safety and health plans must adopt a comparable standard within six months of the publication date of this final standard. These 25 states and territories are: Alaska, Arizona, California, Connecticut (for state and local government employees only), Hawaii, Indiana, Iowa, Kentucky, Maryland, Michigan, Minnesota, Nevada, New Mexico, New York (for state and local government employees only), North Carolina, Oregon, Puerto Rico, South Carolina, Tennessee, Utah, Vermont, Virginia, Virgin Islands, Washington, and Wyoming. Until such time as a state standard is promulgated, Federal OSHA will provide interim enforcement assistance, as appropriate, in these states.

XI. List of Subjects

List of Subjects in 29 CFR Part 1926

Structural steel erection, Construction industry, Construction safety, Occupational Safety and Health Administration, Occupational safety and health.

XII. Authority

This document was prepared under the direction of Charles N. Jeffress, Assistant Secretary of Labor for Occupational Safety and Health, U.S. Department of Labor, 200 Constitution Avenue, NW., Washington, DC 20210.

Accordingly, pursuant to sections 4, 6, and 8 of the Occupational Safety and Health Act of 1970 (29 U.S.C. 653, 655, and 657); section 107 of the Contract Work Hours and Safety Standards Act (40 U.S.C. 333), Secretary of Labor's Order No. 6–96 (62 FR 111), and 29 CFR

part 1911, the Agency amends part 1926 of Title 29 of the Code of Federal Regulations as set forth below.

Signed at Washington, D.C., this 8th day of January, 2001.

Charles N. Jeffress,

Assistant Secretary of Labor.

PART 1926—[AMENDED]

Subpart M—Fall Protection

1. The authority citation for subpart M of Part 1926 is revised to read as follows:

Authority: Sec. 107, Contract Work Hours and Safety Standards Act (Construction Safety Act) (40 U.S.C. 333); Sec. 4, 6, 8, Occupational Safety and Health Act of 1970 (29 U.S.C. 653, 655, 657); Secretary of Labor's Orders Nos. 1–90 (55 FR 9033), 6–96 (62 FR 111); and 3–2000 (65 FR 50017), as applicable, and 29 CFR Part 1911.

2. Paragraphs (a)(2) (v) and (vi) of § 1926.500 are redesignated as paragraphs (a)(2) (vi) and (vii), respectively. In addition, paragraphs (a)(2) (iii) and (v) and (a)(3)(iv) are revised to read as follows:

§ 1926.500 Scope, application, and definitions applicable to this subpart.

(a) * * *

(2) * * *

(iii) Fall protection requirements for employees performing steel erection work (except for towers and tanks) are provided in subpart R of this part.

* * * * *

(v) Requirements relating to fall protection for employees engaged in the erection of tanks and communication and broadcast towers are provided in § 1926.105.

* * * * *

(3) * * *

* * * * *

(iv) Section 1926.502 does not apply to the erection of tanks and communication and broadcast towers. (Note: Section 1926.104 sets the criteria for body belts, lanyards and lifelines used for fall protection during tank and communication and broadcast tower erection. Paragraphs (b),(c) and (f) of § 1926.107 provide definitions for the pertinent terms.)

* * * * *

Subpart R—[Amended]

3. The authority citation for subpart R of part 1926 is revised to read as follows:

Authority: Sec. 107, Contract Work Hours and Safety Standards Act (Construction Safety Act) (40 U.S.C. 333); Sec. 4, 6, and 8, Occupational Safety and Health Act of 1970 (29 U.S.C. 653, 655, 657); Secretary of Labor's Order No. 3–2000 (65 FR 50017), and 29 CFR part 1911.

4. Subpart R of part 1926 is revised to read as follows:

Subpart R—Steel Erection

Sec.

1926.750 Scope.
1926.751 Definitions.
1926.752 Site layout, site-specific erection plan and construction sequence.
1926.753 Hoisting and rigging.
1926.754 Structural steel assembly.
1926.755 Column anchorage.
1926.756 Beams and columns.
1926.757 Open web steel joists.
1926.758 Systems-engineered metal buildings.
1926.759 Falling object protection.
1926.760 Fall protection.
1926.761 Training.
Appendix A to Subpart R—Guidelines for establishing the components of a site-specific erection plan: Non-Mandatory Guidelines for Complying with § 1926.752(e)
Appendix B to Subpart R—Acceptable test methods for testing slip-resistance of walking/working surfaces: Non-Mandatory Guidelines for Complying with § 1926.754(c)(3)
Appendix C to Subpart R—Illustrations of bridging terminus points: Non-Mandatory Guidelines for Complying with § 1926.757(a)(10) and § 1926.757(c)(5)
Appendix D to Subpart R—Illustration of the use of control lines to demarcate controlled decking zones (CDZs): Non-Mandatory Guidelines for Complying with § 1926.760(c)(3)
Appendix E to Subpart R—Training: Non-Mandatory Guidelines for Complying with § 1926.761
Appendix F to Subpart R— Perimeter columns: Non-Mandatory Guidelines for Complying with § 1926.756(e) to Protect the Unprotected Side or Edge of a Walking/Working Surface
Appendix G to Subpart R—Fall protection systems criteria and practices from § 1926.502: Non-Mandatory Guidelines for Complying with Complying with § 1926.760(d)
Appendix H to Subpart R—Double connections: Illustration of a clipped end connection and a staggered connection: Non-Mandatory Guidelines for Complying with Complying with § 1926.756(c)(1)

Subpart R—Steel Erection

§ 1926.750 Scope.

(a) This subpart sets forth requirements to protect employees from the hazards associated with steel erection activities involved in the construction, alteration, and/or repair of single and multi-story buildings, bridges, and other structures where steel erection occurs. The requirements of this subpart apply to employers engaged in steel erection unless otherwise specified. This subpart does not cover electrical transmission towers, communication and broadcast towers, or tanks.

Note to paragraph (a): Examples of structures where steel erection may occur include but are not limited to the following: Single and multi-story buildings; systems-engineered metal buildings; lift slab/tilt-up structures; energy exploration structures; energy production, transfer and storage structures and facilities; auditoriums; malls; amphitheaters; stadiums; power plants; mills; chemical process structures; bridges; trestles; overpasses; underpasses; viaducts; aqueducts; aerospace facilities and structures; radar and communication structures; light towers; signage; billboards; scoreboards; conveyor systems; conveyor supports and related framing; stairways; stair towers; fire escapes; draft curtains; fire containment structures; monorails; aerialways; catwalks; curtain walls; window walls; store fronts; elevator fronts; entrances; skylights; metal roofs; industrial structures; hi-bay structures; rail, marine and other transportation structures; sound barriers; water process and water containment structures; air and cable supported structures; space frames; geodesic domes; canopies; racks and rack support structures and frames; platforms; walkways; balconies; atriums; penthouses; car dumpers; stackers/reclaimers; cranes and craneways; bins; hoppers; ovens; furnaces; stacks; amusement park structures and rides; and artistic and monumental structures.

(b)(1) Steel erection activities include hoisting, laying out, placing, connecting, welding, burning, guying, bracing, bolting, plumbing and rigging structural steel, steel joists and metal buildings; installing metal decking, curtain walls, window walls, siding systems, miscellaneous metals, ornamental iron and similar materials; and moving point-to-point while performing these activities.

(2) The following activities are covered by this subpart when they occur during and are a part of steel erection activities: rigging, hoisting, laying out, placing, connecting, guying, bracing, dismantling, burning, welding, bolting, grinding, sealing, caulking, and all related activities for construction, alteration and/or repair of materials and assemblies such as structural steel; ferrous metals and alloys; non-ferrous metals and alloys; glass; plastics and synthetic composite materials; structural metal framing and related bracing and assemblies; anchoring devices; structural cabling; cable stays; permanent and temporary bents and towers; falsework for temporary supports of permanent steel members; stone and other non-precast concrete architectural materials mounted on steel frames; safety systems for steel erection; steel and metal joists; metal decking and raceway systems and accessories; metal

roofing and accessories; metal siding; bridge flooring; cold formed steel framing; elevator beams; grillage; shelf racks; multi-purpose supports; crane rails and accessories; miscellaneous, architectural and ornamental metals and metal work; ladders; railings; handrails; fences and gates; gratings; trench covers; floor plates; castings; sheet metal fabrications; metal panels and panel wall systems; louvers; column covers; enclosures and pockets; stairs; perforated metals; ornamental iron work, expansion control including bridge expansion joint assemblies; slide bearings; hydraulic structures; fascias; soffit panels; penthouse enclosures; skylights; joint fillers; gaskets; sealants and seals; doors; windows; hardware; detention/security equipment and doors, windows and hardware; conveying systems; building specialties; building equipment; machinery and plant equipment, furnishings and special construction.

(c) The duties of controlling contractors under this subpart include, but are not limited to, the duties specified in §§ 1926.752 (a) and (c), 1926.755(b)(2), 1926.759(b), and 1926.760(e).

§ 1926.751 Definitions.

Anchored bridging means that the steel joist bridging is connected to a bridging terminus point.

Bolted diagonal bridging means diagonal bridging that is bolted to a steel joist or joists.

Bridging clip means a device that is attached to the steel joist to allow the bolting of the bridging to the steel joist.

Bridging terminus point means a wall, a beam, tandem joists (with all bridging installed and a horizontal truss in the plane of the top chord) or other element at an end or intermediate point(s) of a line of bridging that provides an anchor point for the steel joist bridging.

Choker means a wire rope or synthetic fiber rigging assembly that is used to attach a load to a hoisting device.

Cold forming means the process of using press brakes, rolls, or other methods to shape steel into desired cross sections at room temperature.

Column means a load-carrying vertical member that is part of the primary skeletal framing system. Columns do not include posts.

Competent person (also defined in § 1926.32) means one who is capable of identifying existing and predictable hazards in the surroundings or working conditions which are unsanitary, hazardous, or dangerous to employees, and who has authorization to take prompt corrective measures to eliminate them.

Connector means an employee who, working with hoisting equipment, is placing and connecting structural members and/or components.

Constructibility means the ability to erect structural steel members in accordance with subpart R without having to alter the over-all structural design.

Construction load (for joist erection) means any load other than the weight of the employee(s), the joists and the bridging bundle.

Controlled Decking Zone (CDZ) means an area in which certain work (for example, initial installation and placement of metal decking) may take place without the use of guardrail systems, personal fall arrest systems, fall restraint systems, or safety net systems and where access to the zone is controlled.

Controlled load lowering means lowering a load by means of a mechanical hoist drum device that allows a hoisted load to be lowered with maximum control using the gear train or hydraulic components of the hoist mechanism. Controlled load lowering requires the use of the hoist drive motor, rather than the load hoist brake, to lower the load.

Controlling contractor means a prime contractor, general contractor, construction manager or any other legal entity which has the overall responsibility for the construction of the project—its planning, quality and completion.

Critical lift means a lift that (1) exceeds 75 percent of the rated capacity of the crane or derrick, or (2) requires the use of more than one crane or derrick.

Decking hole means a gap or void more than 2 inches (5.1 cm) in its least dimension and less than 12 inches (30.5 cm) in its greatest dimension in a floor, roof or other walking/working surface. Pre-engineered holes in cellular decking (for wires, cables, etc.) are not included in this definition.

Derrick floor means an elevated floor of a building or structure that has been designated to receive hoisted pieces of steel prior to final placement.

Double connection means an attachment method where the connection point is intended for two pieces of steel which share common bolts on either side of a central piece.

Double connection seat means a structural attachment that, during the installation of a double connection, supports the first member while the second member is connected.

Erection bridging means the bolted diagonal bridging that is required to be installed prior to releasing the hoisting cables from the steel joists.

Fall restraint system means a fall protection system that prevents the user from falling any distance. The system is comprised of either a body belt or body harness, along with an anchorage, connectors and other necessary equipment. The other components typically include a lanyard, and may also include a lifeline and other devices.

Final interior perimeter means the perimeter of a large permanent open space within a building such as an atrium or courtyard. This does not include openings for stairways, elevator shafts, etc.

Girt (in systems-engineered metal buildings) means a ''Z'' or ''C'' shaped member formed from sheet steel spanning between primary framing and supporting wall material.

Headache ball means a weighted hook that is used to attach loads to the hoist load line of the crane.

Hoisting equipment means commercially manufactured lifting equipment designed to lift and position a load of known weight to a location at some known elevation and horizontal distance from the equipment's center of rotation. ''Hoisting equipment'' includes but is not limited to cranes, derricks, tower cranes, barge-mounted derricks or cranes, gin poles and gantry hoist systems. A ''come-a-long'' (a mechanical device, usually consisting of a chain or cable attached at each end, that is used to facilitate movement of materials through leverage) is not considered ''hoisting equipment.''

Leading edge means the unprotected side and edge of a floor, roof, or formwork for a floor or other walking/working surface (such as deck) which changes location as additional floor, roof, decking or formwork sections are placed, formed or constructed.

Metal decking means a commercially manufactured, structural grade, cold rolled metal panel formed into a series of parallel ribs; for this subpart, this includes metal floor and roof decks, standing seam metal roofs, other metal roof systems and other products such as bar gratings, checker plate, expanded metal panels, and similar products. After installation and proper fastening, these decking materials serve a combination of functions including, but not limited to: a structural element designed in combination with the structure to resist, distribute and transfer loads, stiffen the structure and provide a diaphragm action; a walking/working surface; a form for concrete slabs; a support for roofing systems; and a finished floor or roof.

Multiple lift rigging means a rigging assembly manufactured by wire rope rigging suppliers that facilitates the attachment of up to five independent loads to the hoist rigging of a crane.

Opening means a gap or void 12 inches (30.5 cm) or more in its least dimension in a floor, roof or other walking/working surface. For the purposes of this subpart, skylights and smoke domes that do not meet the strength requirements of § 1926.754(e)(3) shall be regarded as openings.

Permanent floor means a structurally completed floor at any level or elevation (including slab on grade).

Personal fall arrest system means a system used to arrest an employee in a fall from a working level. A personal fall arrest system consists of an anchorage, connectors, a body harness and may include a lanyard, deceleration device, lifeline, or suitable combination of these. The use of a body belt for fall arrest is prohibited.

Positioning device system means a body belt or body harness rigged to allow an employee to be supported on an elevated, vertical surface, such as a wall or column and work with both hands free while leaning.

Post means a structural member with a longitudinal axis that is essentially vertical, that: (1) weighs 300 pounds or less and is axially loaded (a load presses down on the top end), or (2) is not axially loaded, but is laterally restrained by the above member. Posts typically support stair landings, wall framing, mezzanines and other substructures.

Project structural engineer of record means the registered, licensed professional responsible for the design of structural steel framing and whose seal appears on the structural contract documents.

Purlin (in systems-engineered metal buildings) means a ''Z'' or ''C'' shaped member formed from sheet steel spanning between primary framing and supporting roof material.

Qualified person (also defined in § 1926.32) means one who, by possession of a recognized degree, certificate, or professional standing, or who by extensive knowledge, training, and experience, has successfully demonstrated the ability to solve or resolve problems relating to the subject matter, the work, or the project.

Safety deck attachment means an initial attachment that is used to secure an initially placed sheet of decking to keep proper alignment and bearing with structural support members.

Shear connector means headed steel studs, steel bars, steel lugs, and similar devices which are attached to a structural member for the purpose of achieving composite action with concrete.

Steel erection means the construction, alteration or repair of steel buildings, bridges and other structures, including the installation of metal decking and all planking used during the process of erection.

Steel joist means an open web, secondary load-carrying member of 144 feet (43.9 m) or less, designed by the manufacturer, used for the support of floors and roofs. This does not include structural steel trusses or cold-formed joists.

Steel joist girder means an open web, primary load-carrying member, designed by the manufacturer, used for the support of floors and roofs. This does not include structural steel trusses.

Steel truss means an open web member designed of structural steel components by the project structural engineer of record. For the purposes of this subpart, a steel truss is considered equivalent to a solid web structural member.

Structural steel means a steel member, or a member made of a substitute material (such as, but not limited to, fiberglass, aluminum or composite members). These members include, but are not limited to, steel joists, joist girders, purlins, columns, beams, trusses, splices, seats, metal decking, girts, and all bridging, and cold formed metal framing which is integrated with the structural steel framing of a building.

Systems-engineered metal building means a metal, field-assembled building system consisting of framing, roof and wall coverings. Typically, many of these components are cold-formed shapes. These individual parts are fabricated in one or more manufacturing facilities and shipped to the job site for assembly into the final structure. The engineering design of the system is normally the responsibility of the systems-engineered metal building manufacturer.

Tank means a container for holding gases, liquids or solids.

Unprotected sides and edges means any side or edge (except at entrances to points of access) of a walking/working surface, for example a, floor, roof, ramp or runway, where there is no wall or guardrail system at least 39 inches (1.0 m) high.

§ 1926.752 Site layout, site-specific erection plan and construction sequence.

(a) *Approval to begin steel erection.* Before authorizing the commencement of steel erection, the controlling contractor shall ensure that the steel erector is provided with the following written notifications:

(1) The concrete in the footings, piers and walls and the mortar in the masonry piers and walls has attained, on the basis of an appropriate ASTM standard test method of field-cured samples, either 75 percent of the intended minimum compressive design strength or sufficient strength to support the loads imposed during steel erection.

(2) Any repairs, replacements and modifications to the anchor bolts were conducted in accordance with § 1926.755(b).

(b) *Commencement of steel erection.* A steel erection contractor shall not erect steel unless it has received written notification that the concrete in the footings, piers and walls or the mortar in the masonry piers and walls has attained, on the basis of an appropriate ASTM standard test method of field-cured samples, either 75 percent of the intended minimum compressive design strength or sufficient strength to support the loads imposed during steel erection.

(c) *Site layout.* The controlling contractor shall ensure that the following is provided and maintained:

(1) Adequate access roads into and through the site for the safe delivery and movement of derricks, cranes, trucks, other necessary equipment, and the material to be erected and means and methods for pedestrian and vehicular control. Exception: this requirement does not apply to roads outside of the construction site.

(2) A firm, properly graded, drained area, readily accessible to the work with adequate space for the safe storage of materials and the safe operation of the erector's equipment.

(d) *Pre-planning of overhead hoisting operations.* All hoisting operations in steel erection shall be pre-planned to ensure that the requirements of § 1926.753(d) are met.

(e) *Site-specific erection plan.* Where employers elect, due to conditions specific to the site, to develop alternate means and methods that provide employee protection in accordance with § 1926.753(c)(5), § 1926.757(a)(4) or § 1926.757(e)(4), a site-specific erection plan shall be developed by a qualified person and be available at the work site. Guidelines for establishing a site-specific erection plan are contained in Appendix A to this subpart.

§ 1926.753 Hoisting and rigging.

(a) All the provisions of § 1926.550 apply to hoisting and rigging with the exception of § 1926.550(g)(2).

(b) In addition, paragraphs (c) through (e) of this section apply regarding the

hazards associated with hoisting and rigging.

(c) *General.* (1) Pre-shift visual inspection of cranes.

(i) Cranes being used in steel erection activities shall be visually inspected prior to each shift by a competent person; the inspection shall include observation for deficiencies during operation. At a minimum this inspection shall include the following:

(A) All control mechanisms for maladjustments;

(B) Control and drive mechanism for excessive wear of components and contamination by lubricants, water or other foreign matter;

(C) Safety devices, including but not limited to boom angle indicators, boom stops, boom kick out devices, anti-two block devices, and load moment indicators where required;

(D) Air, hydraulic, and other pressurized lines for deterioration or leakage, particularly those which flex in normal operation;

(E) Hooks and latches for deformation, chemical damage, cracks, or wear;

(F) Wire rope reeving for compliance with hoisting equipment manufacturer's specifications;

(G) Electrical apparatus for malfunctioning, signs of excessive deterioration, dirt, or moisture accumulation;

(H) Hydraulic system for proper fluid level;

(I) Tires for proper inflation and condition;

(J) Ground conditions around the hoisting equipment for proper support, including ground settling under and around outriggers, ground water accumulation, or similar conditions;

(K) The hoisting equipment for level position; and

(L) The hoisting equipment for level position after each move and setup.

(ii) If any deficiency is identified, an immediate determination shall be made by the competent person as to whether the deficiency constitutes a hazard.

(iii) If the deficiency is determined to constitute a hazard, the hoisting equipment shall be removed from service until the deficiency has been corrected.

(iv) The operator shall be responsible for those operations under the operator's direct control. Whenever there is any doubt as to safety, the operator shall have the authority to stop and refuse to handle loads until safety has been assured.

(2) A qualified rigger (a rigger who is also a qualified person) shall inspect the rigging prior to each shift in accordance with § 1926.251.

(3) The headache ball, hook or load shall not be used to transport personnel except as provided in paragraph (c)(4) of this section.

(4) Cranes or derricks may be used to hoist employees on a personnel platform when work under this subpart is being conducted, provided that all provisions of § 1926.550 (except for § 1926.550(g)(2)) are met.

(5) Safety latches on hooks shall not be deactivated or made inoperable except:

(i) When a qualified rigger has determined that the hoisting and placing of purlins and single joists can be performed more safely by doing so; or

(ii) When equivalent protection is provided in a site-specific erection plan.

(d) *Working under loads.*

(1) Routes for suspended loads shall be pre-planned to ensure that no employee is required to work directly below a suspended load except for:

(i) Employees engaged in the initial connection of the steel; or

(ii) Employees necessary for the hooking or unhooking of the load.

(2) When working under suspended loads, the following criteria shall be met:

(i) Materials being hoisted shall be rigged to prevent unintentional displacement;

(ii) Hooks with self-closing safety latches or their equivalent shall be used to prevent components from slipping out of the hook; and

(iii) All loads shall be rigged by a qualified rigger

(e) *Multiple lift rigging procedure.*

(1) A multiple lift shall only be performed if the following criteria are met:

(i) A multiple lift rigging assembly is used;

(ii) A maximum of five members are hoisted per lift;

(iii) Only beams and similar structural members are lifted; and

(iv) All employees engaged in the multiple lift have been trained in these procedures in accordance with § 1926.761(c)(1).

(v) No crane is permitted to be used for a multiple lift where such use is contrary to the manufacturer's specifications and limitations.

(2) Components of the multiple lift rigging assembly shall be specifically designed and assembled with a maximum capacity for total assembly and for each individual attachment point. This capacity, certified by the manufacturer or a qualified rigger, shall be based on the manufacturer's specifications with a 5 to 1 safety factor for all components.

(3) The total load shall not exceed:

(i) The rated capacity of the hoisting equipment specified in the hoisting equipment load charts;

(ii) The rigging capacity specified in the rigging rating chart.

(4) The multiple lift rigging assembly shall be rigged with members:

(i) Attached at their center of gravity and maintained reasonably level;

(ii) Rigged from top down; and

(iii) Rigged at least 7 feet (2.1 m) apart.

(5) The members on the multiple lift rigging assembly shall be set from the bottom up.

(6) Controlled load lowering shall be used whenever the load is over the connectors.

§ 1926.754 Structural steel assembly.

(a) Structural stability shall be maintained at all times during the erection process.

(b) The following additional requirements shall apply for multi-story structures:

(1) The permanent floors shall be installed as the erection of structural members progresses, and there shall be not more than eight stories between the erection floor and the upper-most permanent floor, except where the structural integrity is maintained as a result of the design.

(2) At no time shall there be more than four floors or 48 feet (14.6 m), whichever is less, of unfinished bolting or welding above the foundation or uppermost permanently secured floor, except where the structural integrity is maintained as a result of the design.

(3) A fully planked or decked floor or nets shall be maintained within two stories or 30 feet (9.1 m), whichever is less, directly under any erection work being performed.

(c) *Walking/working surfaces.*

(1) *Shear connectors and other similar devices.*

(i) *Tripping hazards.* Shear connectors (such as headed steel studs, steel bars or steel lugs), reinforcing bars, deformed anchors or threaded studs shall not be attached to the top flanges of beams, joists or beam attachments so that they project vertically from or horizontally across the top flange of the member until after the metal decking, or other walking/working surface, has been installed.

(ii) *Installation of shear connectors on composite floors, roofs and bridge decks.* When shear connectors are used in construction of composite floors, roofs and bridge decks, employees shall lay out and install the shear connectors after the metal decking has been installed, using the metal decking as a working platform. Shear connectors

shall not be installed from within a controlled decking zone (CDZ), as specified in § 1926.760(c)(8).

(2) *Slip resistance of metal decking.* [Reserved]

(3) *Slip resistance of skeletal structural steel.* Workers shall not be permitted to walk the top surface of any structural steel member installed after July 18, 2006 that has been coated with paint or similar material unless documentation or certification that the coating has achieved a minimum average slip resistance of .50 when measured with an English XL tribometer or equivalent tester on a wetted surface at a testing laboratory is provided. Such documentation or certification shall be based on the appropriate ASTM standard test method conducted by a laboratory capable of performing the test. The results shall be available at the site and to the steel erector. (Appendix B to this subpart references appropriate ASTM standard test methods that may be used to comply with this paragraph (c)(3)).

(d) *Plumbing-up.*

(1) When deemed necessary by a competent person, plumbing-up equipment shall be installed in conjunction with the steel erection process to ensure the stability of the structure.

(2) When used, plumbing-up equipment shall be in place and properly installed before the structure is loaded with construction material such as loads of joists, bundles of decking or bundles of bridging.

(3) Plumbing-up equipment shall be removed only with the approval of a competent person.

(e) *Metal decking.*—(1) *Hoisting, landing and placing of metal decking bundles.*

(i) Bundle packaging and strapping shall not be used for hoisting unless specifically designed for that purpose.

(ii) If loose items such as dunnage, flashing, or other materials are placed on the top of metal decking bundles to be hoisted, such items shall be secured to the bundles.

(iii) Bundles of metal decking on joists shall be landed in accordance with § 1926.757(e)(4).

(iv) Metal decking bundles shall be landed on framing members so that enough support is provided to allow the bundles to be unbanded without dislodging the bundles from the supports.

(v) At the end of the shift or when environmental or jobsite conditions require, metal decking shall be secured against displacement.

(2) *Roof and floor holes and openings.* Metal decking at roof and floor holes and openings shall be installed as follows:

(i) Framed metal deck openings shall have structural members turned down to allow continuous deck installation except where not allowed by structural design constraints or constructibility.

(ii) Roof and floor holes and openings shall be decked over. Where large size, configuration or other structural design does not allow openings to be decked over (such as elevator shafts, stair wells, etc.) employees shall be protected in accordance with § 1926.760(a)(1).

(iii) Metal decking holes and openings shall not be cut until immediately prior to being permanently filled with the equipment or structure needed or intended to fulfill its specific use and which meets the strength requirements of paragraph (e)(3) of this section, or shall be immediately covered.

(3) *Covering roof and floor openings.*

(i) Covers for roof and floor openings shall be capable of supporting, without failure, twice the weight of the employees, equipment and materials that may be imposed on the cover at any one time.

(ii) All covers shall be secured when installed to prevent accidental displacement by the wind, equipment or employees.

(iii) All covers shall be painted with high-visibility paint or shall be marked with the word ''HOLE'' or ''COVER'' to provide warning of the hazard.

(iv) Smoke dome or skylight fixtures that have been installed, are not considered covers for the purpose of this section unless they meet the strength requirements of paragraph (e)(3)(i) of this section.

(4) *Decking gaps around columns.* Wire mesh, exterior plywood, or equivalent, shall be installed around columns where planks or metal decking do not fit tightly. The materials used must be of sufficient strength to provide fall protection for personnel and prevent objects from falling through.

(5) *Installation of metal decking.* (i) Except as provided in § 1926.760(c), metal decking shall be laid tightly and immediately secured upon placement to prevent accidental movement or displacement.

(ii) During initial placement, metal decking panels shall be placed to ensure full support by structural members.

(6) Derrick floors. (i) A derrick floor shall be fully decked and/or planked and the steel member connections completed to support the intended floor loading.

(ii) Temporary loads placed on a derrick floor shall be distributed over the underlying support members so as to prevent local overloading of the deck material.

§ 1926.755 Column anchorage.

(a) *General requirements for erection stability.* (1) All columns shall be anchored by a minimum of 4 anchor rods (anchor bolts).

(2) Each column anchor rod (anchor bolt) assembly, including the column-to-base plate weld and the column foundation, shall be designed to resist a minimum eccentric gravity load of 300 pounds (136.2 kg) located 18 inches (.46m) from the extreme outer face of the column in each direction at the top of the column shaft.

(3) Columns shall be set on level finished floors, pre-grouted leveling plates, leveling nuts, or shim packs which are adequate to transfer the construction loads.

(4) All columns shall be evaluated by a competent person to determine whether guying or bracing is needed; if guying or bracing is needed, it shall be installed.

(b) *Repair, replacement or field modification of anchor rods (anchor bolts).*

(1) Anchor rods (anchor bolts) shall not be repaired, replaced or field-modified without the approval of the project structural engineer of record.

(2) Prior to the erection of a column, the controlling contractor shall provide written notification to the steel erector if there has been any repair, replacement or modification of the anchor rods (anchor bolts) of that column.

§ 1926.756 Beams and columns.

(a) *General.* (1) During the final placing of solid web structural members, the load shall not be released from the hoisting line until the members are secured with at least two bolts per connection, of the same size and strength as shown in the erection drawings, drawn up wrench-tight or the equivalent as specified by the project structural engineer of record, except as specified in paragraph (b) of this section.

(2) A competent person shall determine if more than two bolts are necessary to ensure the stability of cantilevered members; if additional bolts are needed, they shall be installed.

(b) *Diagonal bracing.* Solid web structural members used as diagonal bracing shall be secured by at least one bolt per connection drawn up wrench-tight or the equivalent as specified by the project structural engineer of record.

(c) (1) *Double connections at columns and/or at beam webs over a column.* When two structural members on

opposite sides of a column web, or a beam web over a column, are connected sharing common connection holes, at least one bolt with its wrench-tight nut shall remain connected to the first member unless a shop-attached or field-attached seat or equivalent connection device is supplied with the member to secure the first member and prevent the column from being displaced (See Appendix H to this subpart for examples of equivalent connection devices).

(2) If a seat or equivalent device is used, the seat (or device) shall be designed to support the load during the double connection process. It shall be adequately bolted or welded to both a supporting member and the first member before the nuts on the shared bolts are removed to make the double connection.

(d) *Column splices.* Each column splice shall be designed to resist a minimum eccentric gravity load of 300 pounds (136.2 kg) located 18 inches (.46 m) from the extreme outer face of the column in each direction at the top of the column shaft.

(e) *Perimeter columns.* Perimeter columns shall not be erected unless:

(1) The perimeter columns extend a minimum of 48 inches (1.2 m) above the finished floor to permit installation of perimeter safety cables prior to erection of the next tier, except where constructibility does not allow (see Appendix F to this subpart);

(2) The perimeter columns have holes or other devices in or attached to perimeter columns at 42–45 inches (107–114 cm) above the finished floor and the midpoint between the finished floor and the top cable to permit installation of perimeter safety cables required by § 1926.760(a)(2), except where constructibility does not allow. (See Appendix F to this subpart).

§ 1926.757 Open web steel joists.

(a) *General.* (1) Except as provided in paragraph (a)(2) of this section, where steel joists are used and columns are not framed in at least two directions with solid web structural steel members, a steel joist shall be field-bolted at the column to provide lateral stability to the column during erection. For the installation of this joist:

(i) A vertical stabilizer plate shall be provided on each column for steel joists. The plate shall be a minimum of 6 inch by 6 inch (152 mm by 152 mm) and shall extend at least 3 inches (76 mm) below the bottom chord of the joist with a 13/16 inch (21 mm) hole to provide an attachment point for guying or plumbing cables.

(ii) The bottom chords of steel joists at columns shall be stabilized to prevent rotation during erection.

(iii) Hoisting cables shall not be released until the seat at each end of the steel joist is field-bolted, and each end of the bottom chord is restrained by the column stabilizer plate.

(2) Where constructibility does not allow a steel joist to be installed at the column:

(i) an alternate means of stabilizing joists shall be installed on both sides near the column and shall:

(A) provide stability equivalent to paragraph (a)(1) of this section;

(B) be designed by a qualified person;

(C) be shop installed; and

(D) be included in the erection drawings.

(ii) hoisting cables shall not be released until the seat at each end of the steel joist is field-bolted and the joist is stabilized.

(3) Where steel joists at or near columns span 60 feet (18.3 m) or less, the joist shall be designed with sufficient strength to allow one employee to release the hoisting cable without the need for erection bridging.

(4) Where steel joists at or near columns span more than 60 feet (18.3 m), the joists shall be set in tandem with all bridging installed unless an alternative method of erection, which provides equivalent stability to the steel joist, is designed by a qualified person and is included in the site-specific erection plan.

(5) A steel joist or steel joist girder shall not be placed on any support structure unless such structure is stabilized.

(6) When steel joist(s) are landed on a structure, they shall be secured to prevent unintentional displacement prior to installation.

(7) No modification that affects the strength of a steel joist or steel joist girder shall be made without the approval of the project structural engineer of record.

(8) *Field-bolted joists.* (i) Except for steel joists that have been pre-assembled into panels, connections of individual steel joists to steel structures in bays of 40 feet (12.2 m) or more shall be fabricated to allow for field bolting during erection.

(ii) These connections shall be field-bolted unless constructibility does not allow.

(9) Steel joists and steel joist girders shall not be used as anchorage points for a fall arrest system unless written approval to do so is obtained from a qualified person.

(10) A bridging terminus point shall be established before bridging is installed. (See Appendix C to this subpart.)

(b) *Attachment of steel joists and steel joist girders.* (1) Each end of ''K'' series steel joists shall be attached to the support structure with a minimum of two 1/8-inch (3 mm) fillet welds 1 inch (25 mm) long or with two 1/2-inch (13 mm) bolts, or the equivalent.

(2) Each end of ''LH'' and ''DLH'' series steel joists and steel joist girders shall be attached to the support structure with a minimum of two 1/4-inch (6 mm) fillet welds 2 inches (51 mm) long, or with two 3/4-inch (19 mm) bolts, or the equivalent.

(3) Except as provided in paragraph (b)(4) of this section, each steel joist shall be attached to the support structure, at least at one end on both sides of the seat, immediately upon placement in the final erection position and before additional joists are placed.

(4) Panels that have been pre-assembled from steel joists with bridging shall be attached to the structure at each corner before the hoisting cables are released.

(c) *Erection of steel joists.* (1) Both sides of the seat of one end of each steel joist that requires bridging under Tables A and B shall be attached to the support structure before hoisting cables are released.

(2) For joists over 60 feet, both ends of the joist shall be attached as specified in paragraph (b) of this section and the provisions of paragraph (d) of this section met before the hoisting cables are released.

(3) On steel joists that do not require erection bridging under Tables A and B, only one employee shall be allowed on the joist until all bridging is installed and anchored.

TABLE A.—ERECTION BRIDGING FOR SHORT SPAN JOISTS

Joist	Span
8L1	NM
10K1	NM
12K1	23–0
12K3	NM
12K5	NM
14K1	27–0
14K3	NM
14K4	NM
14K6	NM
16K2	29–0
16K3	30–0
16K4	32–0
16K5	32–0
16K6	NM
16K7	NM
16K9	NM
18K3	31–0
18K4	32–0
18K5	33–0
18K6	35–0

TABLE A.—ERECTION BRIDGING FOR SHORT SPAN JOISTS—Continued

Joist	Span
18K7	NM
18K9	NM
18K10	NM
20K3	32–0
20K4	34–0
20K5	34–0
20K6	36–0
20K7	39–0
20K9	39–0
20K10	NM
22K4	34–0
22K5	35–0
22K6	36–0
22K7	40–0
22K9	40–0
22K10	40–0
22K11	40–0
24K4	36–0
24K5	38–0
24K6	39–0
24K7	43–0
24K8	43–0
24K9	44–0
24K10	NM
24K12	NM
26K5	38–0
26K6	39–0
26K7	43–0
26K8	44–0
26K9	45–0
26K10	49–0
26K12	NM
28K6	40–0
28K7	43–0
28K8	44–0
28K9	45–0
28K10	49–0
28K12	53–0
30K7	44–0
30K8	45–0
30K9	45–0
30K10	50–0
30K11	52–0
30K12	54–0
10KCS1	NM
10KCS2	NM
10KCS3	NM
12KCS1	NM
12KCS2	NM
12KCS3	NM
14KCS1	NM
14KCS2	NM
14KCS3	NM
16KCS2	NM
16KCS3	NM
16KCS4	NM
16KCS5	NM
18KCS2	35–0
18KCS3	NM
18KCS4	NM
18KCS5	NM
20KCS2	36–0
20KCS3	39–0
20KCS4	NM
20KCS5	NM
22KCS2	36–0
22KCS3	40–0
22KCS4	NM
22KCS5	NM
24KCS2	39–0
24KCS3	44–0

TABLE A.—ERECTION BRIDGING FOR SHORT SPAN JOISTS—Continued

Joist	Span
24KCS4	NM
24KCS5	NM
26KCS2	39–0
26KCS3	44–0
26KCS4	NM
26KCS5	NM
28KCS2	40–0
28KCS3	45–0
28KCS4	53–0
28KCS5	53–0
30KC53	45–0
30KCS4	54–0
30KCS5	54–0

NM=diagonal bolted bridging not mandatory for joists under 40 feet.

TABLE B.—ERECTION BRIDGING FOR LONG SPAN JOISTS

Joist	Span
18LH02	33–0.
18LH03	NM.
18LH04	NM.
18LH05	NM.
18LH06	NM.
18LH07	NM.
18LH08	NM.
18LH09	NM.
20LH02	33–0.
20LH03	38–0.
20LH04	NM.
20LH05	NM.
20LH06	NM.
20LH07	NM.
20LH08	NM.
20LH09	NM.
20LH10	NM.
24LH03	35–0.
24LH04	39–0.
24LH05	40–0.
24LH06	45–0.
24LH07	NM.
24LH08	NM.
24LH09	NM.
24LH10	NM.
24LH11	NM.
28LH05	42–0.
28LH06	42–0.
28LH07	NM.
28LH08	NM.
28LH09	NM.
28LH10	NM.
28LH11	NM.
28LH12	NM.
28LH13	NM.
32LH06	47–0 through 60–0.
32LH07	47–0 through 60–0.
32LH08	55–0 through 60–0.
32LH09	NM through 60–0.
32LH10	NM through 60–0.
32LH11	NM through 60–0.
32LH12	NM through 60–0.
32LH13	NM through 60–0.
32LH14	NM through 60–0.
32LH15	NM through 60–0.
36LH07	47–0 through 60–0.
36LH08	47–0 through 60–0.
36LH09	57–0 through 60–0.
36LH10	NM through 60–0.

TABLE B.—ERECTION BRIDGING FOR LONG SPAN JOISTS—Continued

Joist	Span
36LH11	NM through 60–0.
36LH12	NM through 60–0.
36LH13	NM through 60–0.
36LH14	NM through 60–0.
36LH15	NM through 60–0.

NM = diagonal bolted bridging not mandatory for joists under 40 feet.

(4) Employees shall not be allowed on steel joists where the span of the steel joist is equal to or greater than the span shown in Tables A and B except in accordance with § 1926.757(d).

(5) When permanent bridging terminus points cannot be used during erection, additional temporary bridging terminus points are required to provide stability. (See appendix C of this subpart.)

(d) *Erection bridging.* (1) Where the span of the steel joist is equal to or greater than the span shown in Tables A and B, the following shall apply:

(i) A row of bolted diagonal erection bridging shall be installed near the midspan of the steel joist;

(ii) Hoisting cables shall not be released until this bolted diagonal erection bridging is installed and anchored; and

(iii) No more than one employee shall be allowed on these spans until all other bridging is installed and anchored.

(2) Where the span of the steel joist is over 60 feet (18.3 m) through 100 feet (30.5 m), the following shall apply:

(i) All rows of bridging shall be bolted diagonal bridging;

(ii) Two rows of bolted diagonal erection bridging shall be installed near the third points of the steel joist;

(iii) Hoisting cables shall not be released until this bolted diagonal erection bridging is installed and anchored; and

(iv) No more than two employees shall be allowed on these spans until all other bridging is installed and anchored.

(3) Where the span of the steel joist is over 100 feet (30.5 m) through 144 feet (43.9 m), the following shall apply:

(i) All rows of bridging shall be bolted diagonal bridging;

(ii) Hoisting cables shall not be released until all bridging is installed and anchored; and

(iii) No more than two employees shall be allowed on these spans until all bridging is installed and anchored.

(4) For steel members spanning over 144 feet (43.9 m), the erection methods used shall be in accordance with § 1926.756.

(5) Where any steel joist specified in paragraphs (c)(2) and (d)(1), (d)(2), and

(d)(3) of this section is a bottom chord bearing joist, a row of bolted diagonal bridging shall be provided near the support(s). This bridging shall be installed and anchored before the hoisting cable(s) is released.

(6) When bolted diagonal erection bridging is required by this section, the following shall apply:

(i) The bridging shall be indicated on the erection drawing;

(ii) The erection drawing shall be the exclusive indicator of the proper placement of this bridging;

(iii) Shop-installed bridging clips, or functional equivalents, shall be used where the bridging bolts to the steel joists;

(iv) When two pieces of bridging are attached to the steel joist by a common bolt, the nut that secures the first piece of bridging shall not be removed from the bolt for the attachment of the second; and

(v) Bridging attachments shall not protrude above the top chord of the steel joist.

(e) *Landing and placing loads.* (1) During the construction period, the employer placing a load on steel joists shall ensure that the load is distributed so as not to exceed the carrying capacity of any steel joist.

(2) Except for paragraph (e)(4) of this section, no construction loads are allowed on the steel joists until all bridging is installed and anchored and all joist-bearing ends are attached.

(3) The weight of a bundle of joist bridging shall not exceed a total of 1,000 pounds (454 kg). A bundle of joist bridging shall be placed on a minimum of three steel joists that are secured at one end. The edge of the bridging bundle shall be positioned within 1 foot (.30 m) of the secured end.

(4) No bundle of decking may be placed on steel joists until all bridging has been installed and anchored and all joist bearing ends attached, unless all of the following conditions are met:

(i) The employer has first determined from a qualified person and documented in a site-specific erection plan that the structure or portion of the structure is capable of supporting the load;

(ii) The bundle of decking is placed on a minimum of three steel joists;

(iii) The joists supporting the bundle of decking are attached at both ends;

(iv) At least one row of bridging is installed and anchored;

(v) The total weight of the bundle of decking does not exceed 4,000 pounds (1816 kg); and

(vi) Placement of the bundle of decking shall be in accordance with paragraph (e)(5) of this section.

(5) The edge of the construction load shall be placed within 1 foot (.30 m) of the bearing surface of the joist end.

§ 1926.758 Systems-engineered metal buildings.

(a) All of the requirements of this subpart apply to the erection of systems-engineered metal buildings except §§ 1926.755 (column anchorage) and 1926.757 (open web steel joists).

(b) Each structural column shall be anchored by a minimum of four anchor rods (anchor bolts).

(c) Rigid frames shall have 50 percent of their bolts or the number of bolts specified by the manufacturer (whichever is greater) installed and tightened on both sides of the web adjacent to each flange before the hoisting equipment is released.

(d) Construction loads shall not be placed on any structural steel framework unless such framework is safely bolted, welded or otherwise adequately secured.

(e) In girt and eave strut-to-frame connections, when girts or eave struts share common connection holes, at least one bolt with its wrench-tight nut shall remain connected to the first member unless a manufacturer-supplied, field-attached seat or similar connection device is present to secure the first member so that the girt or eave strut is always secured against displacement.

(f) Both ends of all steel joists or cold-formed joists shall be fully bolted and/or welded to the support structure before:

(1) Releasing the hoisting cables;

(2) Allowing an employee on the joists; or

(3) Allowing any construction loads on the joists.

(g) Purlins and girts shall not be used as an anchorage point for a fall arrest system unless written approval is obtained from a qualified person.

(h) Purlins may only be used as a walking/working surface when installing safety systems, after all permanent bridging has been installed and fall protection is provided.

(i) Construction loads may be placed only within a zone that is within 8 feet (2.5 m) of the center-line of the primary support member.

§ 1926.759 Falling object protection.

(a) *Securing loose items aloft.* All materials, equipment, and tools, which are not in use while aloft, shall be secured against accidental displacement.

(b) *Protection from falling objects other than materials being hoisted.* The controlling contractor shall bar other construction processes below steel erection unless overhead protection for the employees below is provided.

§ 1926.760 Fall protection.

(a) *General requirements.* (1) Except as provided by paragraph (a)(3) of this section, each employee engaged in a steel erection activity who is on a walking/working surface with an unprotected side or edge more than 15 feet (4.6 m) above a lower level shall be protected from fall hazards by guardrail systems, safety net systems, personal fall arrest systems, positioning device systems or fall restraint systems.

(2) *Perimeter safety cables.* On multi-story structures, perimeter safety cables shall be installed at the final interior and exterior perimeters of the floors as soon as the metal decking has been installed.

(3) Connectors and employees working in controlled decking zones shall be protected from fall hazards as provided in paragraphs (b) and (c) of this section, respectively.

(b) *Connectors.* Each connector shall:

(1) Be protected in accordance with paragraph (a)(1) of this section from fall hazards of more than two stories or 30 feet (9.1 m) above a lower level, whichever is less;

(2) Have completed connector training in accordance with § 1926.761; and

(3) Be provided, at heights over 15 and up to 30 feet above a lower level, with a personal fall arrest system, positioning device system or fall restraint system and wear the equipment necessary to be able to be tied off; or be provided with other means of protection from fall hazards in accordance with paragraph (a)(1) of this section.

(c) *Controlled Decking Zone (CDZ).* A controlled decking zone may be established in that area of the structure over 15 and up to 30 feet above a lower level where metal decking is initially being installed and forms the leading edge of a work area. In each CDZ, the following shall apply:

(1) Each employee working at the leading edge in a CDZ shall be protected from fall hazards of more than two stories or 30 feet (9.1 m), whichever is less.

(2) Access to a CDZ shall be limited to only those employees engaged in leading edge work.

(3) The boundaries of a CDZ shall be designated and clearly marked. The CDZ shall not be more than 90 feet (27.4 m) wide and 90 (27.4 m) feet deep from any leading edge. The CDZ shall be marked by the use of control lines or the equivalent. Examples of acceptable procedures for demarcating CDZ's can be found in Appendix D to this subpart.

(4) Each employee working in a CDZ shall have completed CDZ training in accordance with § 1926.761.

(5) Unsecured decking in a CDZ shall not exceed 3,000 square feet (914.4 m^2).

(6) Safety deck attachments shall be performed in the CDZ from the leading edge back to the control line and shall have at least two attachments for each metal decking panel.

(7) Final deck attachments and installation of shear connectors shall not be performed in the CDZ.

(d) *Criteria for fall protection equipment.* (1) Guardrail systems, safety net systems, personal fall arrest systems, positioning device systems and their components shall conform to the criteria in § 1926.502 (see Appendix G to this subpart).

(2) Fall arrest system components shall be used in fall restraint systems and shall conform to the criteria in § 1926.502 (see Appendix G). Either body belts or body harnesses shall be used in fall restraint systems.

(3) Perimeter safety cables shall meet the criteria for guardrail systems in § 1926.502 (see Appendix G).

(e) *Custody of fall protection.* Fall protection provided by the steel erector shall remain in the area where steel erection activity has been completed, to be used by other trades, only if the controlling contractor or its authorized representative:

(1) Has directed the steel erector to leave the fall protection in place; and

(2) Has inspected and accepted control and responsibility of the fall protection prior to authorizing persons other than steel erectors to work in the area.

§ 1926.761 Training.

The following provisions supplement the requirements of § 1926.21 regarding the hazards addressed in this subpart.

(a) *Training personnel.* Training required by this section shall be provided by a qualified person(s).

(b) *Fall hazard training.* The employer shall provide a training program for all employees exposed to fall hazards. The program shall include training and instruction in the following areas:

(1) The recognition and identification of fall hazards in the work area;

(2) The use and operation of guardrail systems (including perimeter safety cable systems), personal fall arrest systems, positioning device systems, fall restraint systems, safety net systems, and other protection to be used;

(3) The correct procedures for erecting, maintaining, disassembling, and inspecting the fall protection systems to be used;

(4) The procedures to be followed to prevent falls to lower levels and through or into holes and openings in walking/working surfaces and walls; and

(5) The fall protection requirements of this subpart.

(c) *Special training programs.* In addition to the training required in paragraphs (a) and (b) of this section, the employer shall provide special training to employees engaged in the following activities.

(1) *Multiple lift rigging procedure.* The employer shall ensure that each employee who performs multiple lift rigging has been provided training in the following areas:

(i) The nature of the hazards associated with multiple lifts; and

(ii) The proper procedures and equipment to perform multiple lifts required by § 1926.753(e).

(2) *Connector procedures.* The employer shall ensure that each connector has been provided training in the following areas:

(i) The nature of the hazards associated with connecting; and

(ii) The establishment, access, proper connecting techniques and work practices required by § 1926.756(c) and § 1926.760(b).

(3) *Controlled Decking Zone Procedures.* Where CDZs are being used, the employer shall assure that each employee has been provided training in the following areas:

(i) The nature of the hazards associated with work within a controlled decking zone; and

(ii) The establishment, access, proper installation techniques and work practices required by § 1926.760(c) and § 1926.754(e).

Appendix A to Subpart R—Guidelines for Establishing the Components of a Site-specific Erection Plan: Non-mandatory Guidelines for Complying with § 1926.752(e).

(a) *General.* This appendix serves as a guideline to assist employers who elect to develop a site-specific erection plan in accordance with § 1926.752(e) with alternate means and methods to provide employee protection in accordance with § 1926.752(e), § 1926.753(c)(5), § 1926.757(a)(4) and § 1926.757(e)(4).

(b) *Development of a site-specific erection plan.* Pre-construction conference(s) and site inspection(s) are held between the erector and the controlling contractor, and others such as the project engineer and fabricator before the start of steel erection. The purpose of such conference(s) is to develop and review the site-specific erection plan that will meet the requirements of this section.

(c) *Components of a site-specific erection plan.* In developing a site-specific erection plan, a steel erector considers the following elements:

(1) The sequence of erection activity, developed in coordination with the controlling contractor, that includes the following:

(i) Material deliveries:

(ii) Material staging and storage; and

(iii) Coordination with other trades and construction activities.

(2) A description of the crane and derrick selection and placement procedures, including the following:

(i) Site preparation;

(ii) Path for overhead loads; and

(iii) Critical lifts, including rigging supplies and equipment.

(3) A description of steel erection activities and procedures, including the following:

(i) Stability considerations requiring temporary bracing and guying;

(ii) Erection bridging terminus point;

(iii) Anchor rod (anchor bolt) notifications regarding repair, replacement and modifications;

(iv) Columns and beams (including joists and purlins);

(v) Connections;

(vi) Decking; and

(vii) Ornamental and miscellaneous iron.

(4) A description of the fall protection procedures that will be used to comply with § 1926.760.

(5) A description of the procedures that will be used to comply with § 1926.759.

(6) A description of the special procedures required for hazardous non-routine tasks.

(7) A certification for each employee who has received training for performing steel erection operations as required by § 1926.761.

(8) A list of the qualified and competent persons.

(9) A description of the procedures that will be utilized in the event of rescue or emergency response.

(d) *Other plan information.* The plan:

(1) Includes the identification of the site and project; and

(2) Is signed and dated by the qualified person(s) responsible for its preparation and modification.

Appendix B to Subpart R—Acceptable Test Methods for Testing Slip-Resistance of Walking/Working Surfaces (§ 1926.754(c)(3)). Non-Mandatory Guidelines for Complying With § 1926.754(c)(3).

The following references provide acceptable test methods for complying with the requirements of § 1926.754(c)(3).

- Standard Test Method for Using a Portable Inclineable Articulated Strut Slip Tester (PIAST)(ASTM F1677–96)
- Standard Test Method for Using a Variable Incidence Tribometer (VIT)(ASTM F1679–96)

BILLING CODE 4510–26–P

Appendix C to Subpart R -- Illustrations of Bridging Terminus Points: Non-mandatory Guidelines for Complying with §§1926.757(a)(10) and 1926.757(c)(5).

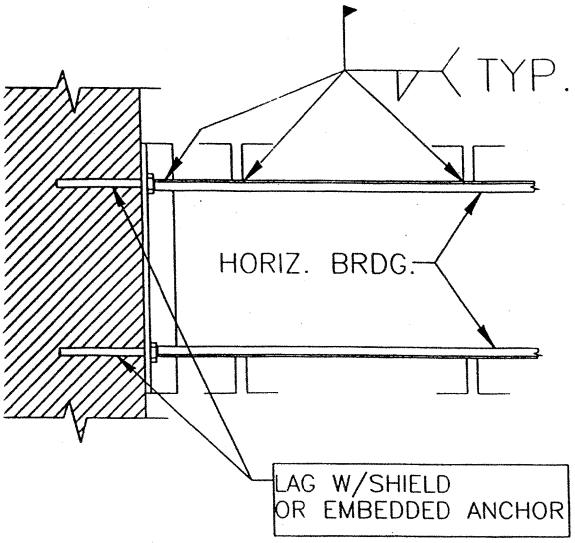

HORIZONTAL BRIDGING TERMINUS AT WALL

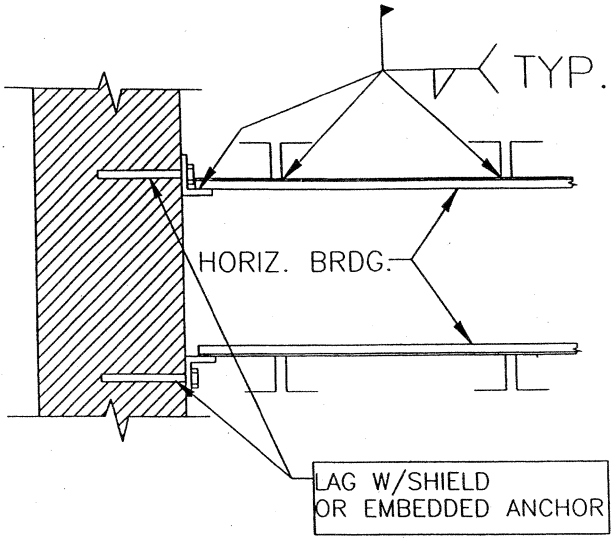

HORIZONTAL BRIDGING TERMINUS AT WALL

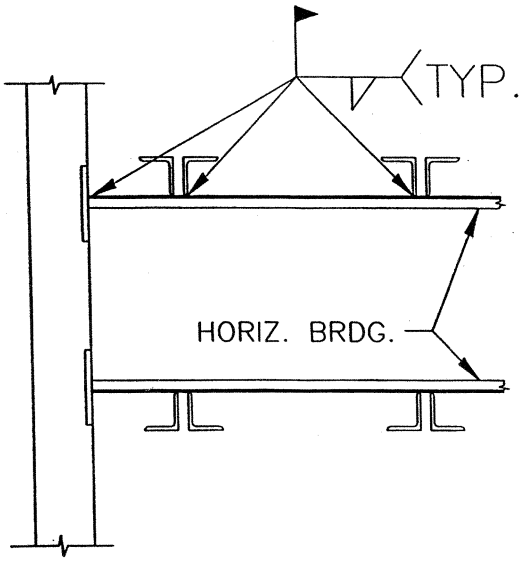

HORIZONTAL BRIDGING TERMINUS AT PANEL WALL

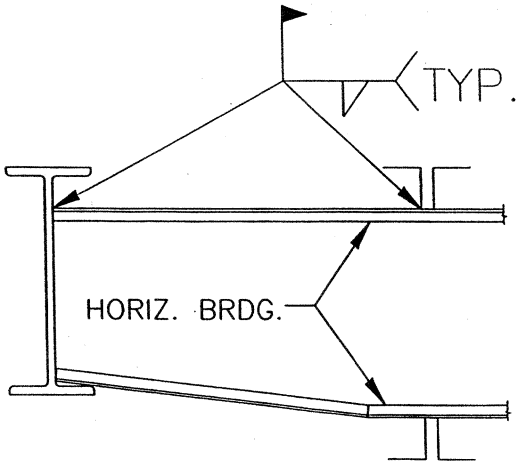

HORIZONTAL BRIDGING TERMINUS AT STRUCTURAL SHAPE

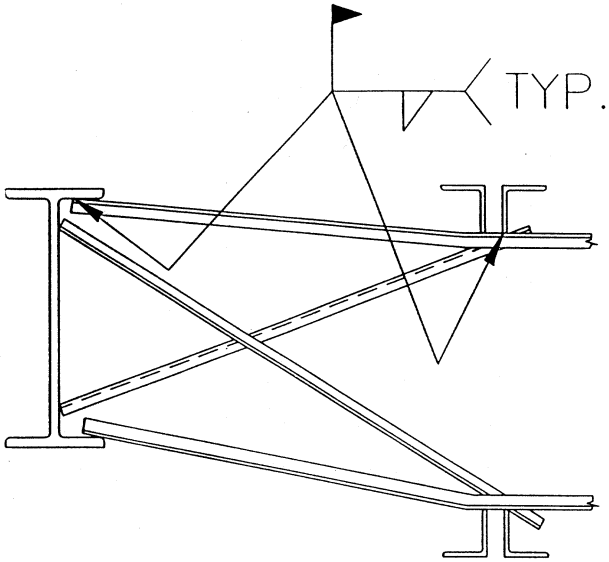

HORIZONTAL BRIDGING TERMINUS AT STRUCTURAL SHAPE WITH OPTIONAL "X–BRIDGING"

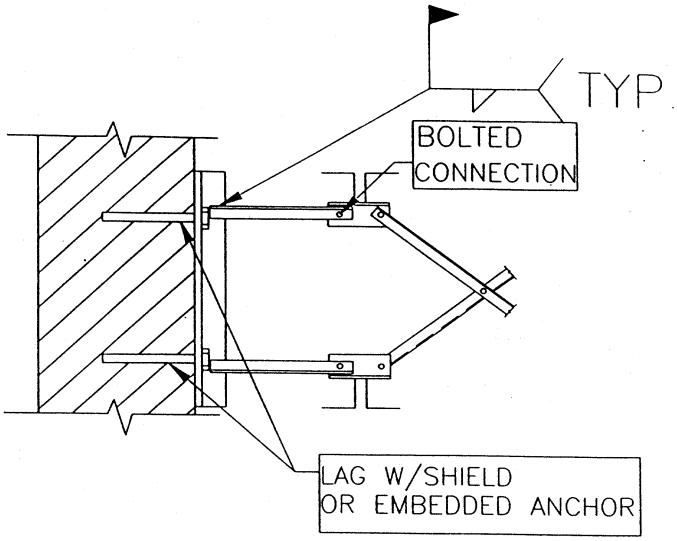

BOLTED DIAGONAL BRIDGING TERMINUS AT WALL

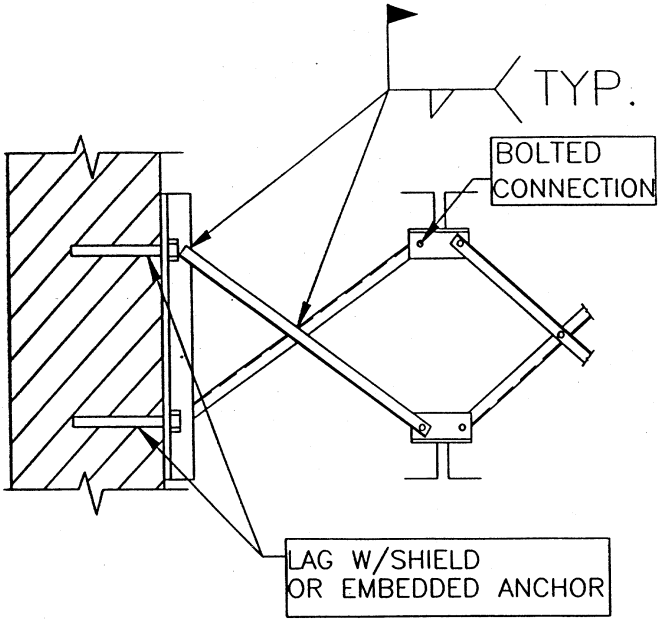

BOLTED DIAGONAL BRIDGING TERMINUS AT WALL

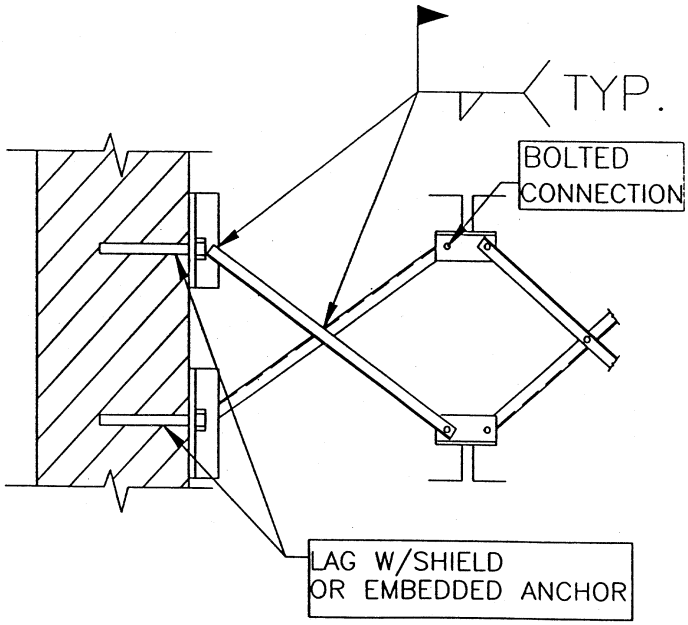

BOLTED DIAGONAL BRIDGING TERMINUS AT WALL

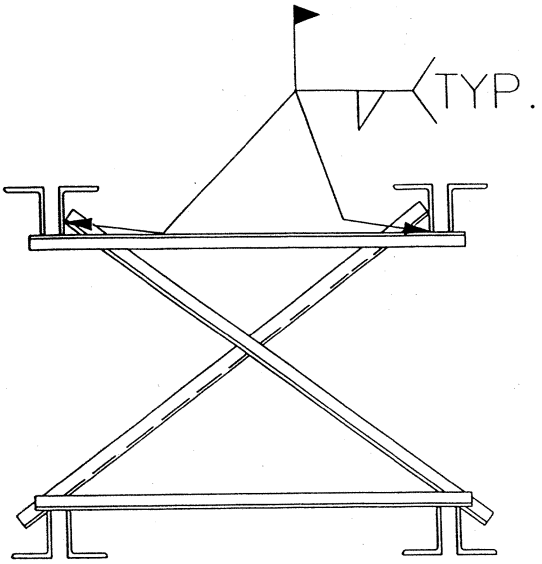

JOISTS PAIR BRIDGING TERMINUS POINT

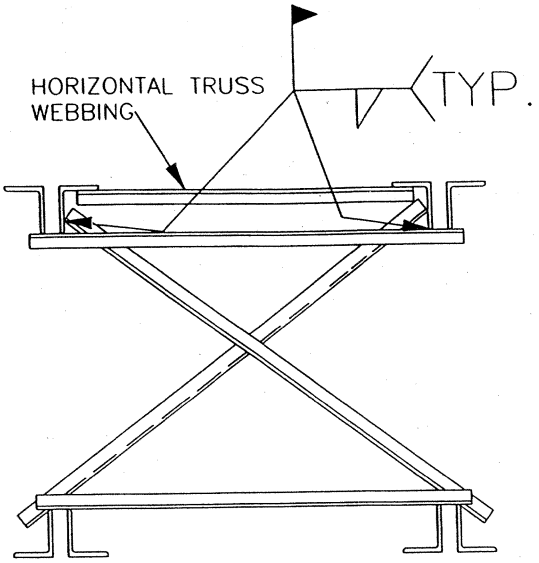

JOISTS PAIR BRIDGING TERMINUS POINT W/HORIZ. TRUSS

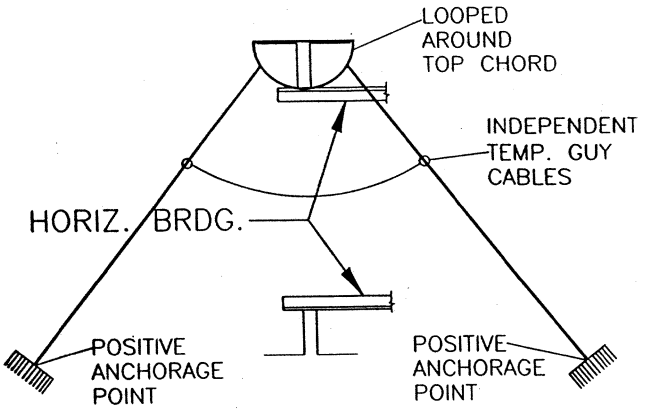

HORIZONTAL BRIDGING TERMINUS POINT SECURED BY TEMP. GUY CABLES

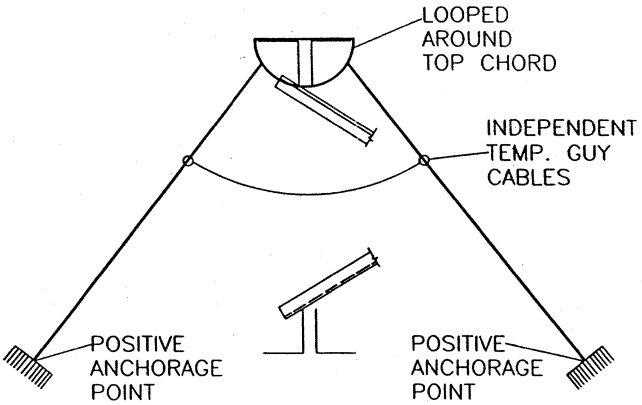

DIAGONAL BRIDGING TERMINUS POINT SECURED BY TEMP. GUY CABLES

BILLING CODE 4510–26–C

Appendix D to Subpart R—Illustration of the Use of Control Lines to Demarcate Controlled Decking Zones (CDZs): Non-mandatory Guidelines for Complying with § 1926.760(c)(3)

(1) When used to control access to areas where leading edge and initial securement of metal deck and other operations connected with leading edge work are taking place, the controlled decking zone (CDZ) is defined by a control line or by any other means that restricts access.

(i) A control line for a CDZ is erected not less than 6 feet (1.8 m) nor more than 90 feet (27.4 m) from the leading edge.

(ii) Control lines extend along the entire length of the unprotected or leading edge and are approximately parallel to the unprotected or leading edge.

(iii) Control lines are connected on each side to a guardrail system, wall, stanchion or other suitable anchorage.

(2) Control lines consist of ropes, wires, tapes, or equivalent materials, and supporting stanchions as follows:

(i) Each line is rigged and supported in such a way that its lowest point (including sag) is not less than 39 inches (1.0 m) from the walking/working surface and its highest point is not more than 45 inches (1.3 m) from the walking/working surface.

(ii) Each line has a minimum breaking strength of 200 pounds (90.8 kg).

Appendix E to Subpart R—Training: Non-mandatory Guidelines for Complying with § 1926.761

The training requirements of § 1926.761 will be deemed to have been met if employees have completed a training course on steel erection, including instruction in the provisions of this standard, that has been approved by the U.S. Department of Labor Bureau of Apprenticeship.

Appendix F to Subpart R—Perimeter Columns: Non-Mandatory Guidelines for Complying with § 1926.756(e) To Protect the Unprotected Side or Edge of a Walking/Working Surface

In multi-story structures, when holes in the column web are used for perimeter safety cables, the column splice must be placed sufficiently high so as not to interfere with any attachments to the column necessary for the column splice. Column splices are recommended to be placed at every other or fourth levels as design allows. Column splices at third levels are detrimental to the erection process and should be avoided if possible.

Appendix G to Subpart R—§ 1926.502 (b)–(e) Fall Protection Systems Criteria and Practices

(b) ''Guardrail systems.'' Guardrail systems and their use shall comply with the following provisions:

(1) Top edge height of top rails, or equivalent guardrail system members, shall be 42 inches (1.1 m) plus or minus 3 inches (8 cm) above the walking/working level. When conditions warrant, the height of the top edge may exceed the 45-inch height, provided the guardrail system meets all other criteria of this paragraph (§ 1926.502(b)).

Note: When employees are using stilts, the top edge height of the top rail, or equivalent member, shall be increased an amount equal to the height of the stilts.

(2) Midrails, screens, mesh, intermediate vertical members, or equivalent intermediate structural members shall be installed between the top edge of the guardrail system and the walking/working surface when there is no wall or parapet wall at least 21 inches (53 cm) high.

(i) Midrails, when used, shall be installed at a height midway between the top edge of the guardrail system and the walking/working level.

(ii) Screens and mesh, when used, shall extend from the top rail to the walking/working level and along the entire opening between top rail supports.

(iii) Intermediate members (such as balusters), when used between posts, shall be not more than 19 inches (48 cm) apart.

(iv) Other structural members (such as additional midrails and architectural panels) shall be installed such that there are no openings in the guardrail system that are more than 19 inches (.5 m) wide.

(3) Guardrail systems shall be capable of withstanding, without failure, a force of at least 200 pounds (890 N) applied within 2 inches (5.1 cm) of the top edge, in any outward or downward direction, at any point along the top edge.

(4) When the 200 pound (890 N) test load specified in paragraph (b)(3) of this section (§ 1926.502) is applied in a downward direction, the top edge of the guardrail shall not deflect to a height less than 39 inches (1.0 m) above the walking/working level. Guardrail system components selected and constructed in accordance with the appendix B to subpart M of this part will be deemed to meet this requirement.

(5) Midrails, screens, mesh, intermediate vertical members, solid panels, and equivalent structural members shall be capable of withstanding, without failure, a force of at least 150 pounds (666 N) applied in any downward or outward direction at any point along the midrail or other member.

(6) Guardrail systems shall be so surfaced as to prevent injury to an employee from punctures or lacerations, and to prevent snagging of clothing.

(7) The ends of all top rails and midrails shall not overhang the terminal posts, except where such overhang does not constitute a projection hazard.

(8) Steel banding and plastic banding shall not be used as top rails or midrails.

(9) Top rails and midrails shall be at least one-quarter inch (0.6 cm) nominal diameter or thickness to prevent cuts and lacerations. If wire rope is used for top rails, it shall be flagged at not more than 6-foot intervals with high-visibility material.

(10) When guardrail systems are used at hoisting areas, a chain, gate or removable guardrail section shall be placed across the access opening between guardrail sections when hoisting operations are not taking place.

(11) When guardrail systems are used at holes, they shall be erected on all unprotected sides or edges of the hole.

(12) When guardrail systems are used around holes used for the passage of materials, the hole shall have not more than two sides provided with removable guardrail sections to allow the passage of materials. When the hole is not in use, it shall be closed over with a cover, or a guardrail system shall be provided along all unprotected sides or edges.

(13) When guardrail systems are used around holes which are used as points of access (such as ladderways), they shall be provided with a gate, or be so offset that a person cannot walk directly into the hole.

(14) Guardrail systems used on ramps and runways shall be erected along each unprotected side or edge.

(15) Manila, plastic or synthetic rope being used for top rails or midrails shall be inspected as frequently as necessary to ensure that it continues to meet the strength requirements of paragraph (b)(3) of this section (§ 1926.502).

(c) *Safety net systems.* Safety net systems and their use shall comply with the following provisions:

(1) Safety nets shall be installed as close as practicable under the walking/working surface on which employees are working, but in no case more than 30 feet (9.1 m) below such level. When nets are used on bridges, the potential fall area from the walking/working surface to the net shall be unobstructed.

(2) Safety nets shall extend outward from the outermost projection of the work surface as follows:

Vertical distance from working level to horizontal plane of net	Minimum required horizontal distance of outer edge of net from the edge of the working surface
Up to 5 feet	8 feet
More than 5 feet up to 10 feet	10 feet
More than 10 feet	13 feet

(3) Safety nets shall be installed with sufficient clearance under them to prevent contact with the surface or structures below when subjected to an impact force equal to the drop test specified in paragraph (4) of this section [§ 1926.502].

(4) Safety nets and their installations shall be capable of absorbing an impact force equal to that produced by the drop test specified in paragraph (c)(4)(i) of this section [§ 1926.502].

(i) Except as provided in paragraph (c)(4)(ii) of this section (§ 1926.502), safety nets and safety net installations shall be drop-tested at the jobsite after initial installation and before being used as a fall protection system, whenever relocated, after major repair, and at 6-month intervals if left in one place. The drop-test shall consist of a 400 pound (180 kg) bag of sand 30+ or −2 inches (76+ or −5 cm) in diameter dropped into the net from the highest walking/working surface at which employees are exposed to fall hazards, but not from less than 42 inches (1.1 m) above that level.

(ii) When the employer can demonstrate that it is unreasonable to perform the drop-test required by paragraph (c)(4)(i) of this section (§ 1926.502), the employer (or a designated competent person) shall certify that the net and net installation is in compliance with the provisions of paragraphs (c)(3) and (c)(4)(i) of this section (§ 1926.502) by preparing a certification record prior to the net being used as a fall protection system. The certification record must include an identification of the net and net installation for which the certification record is being prepared; the date that it was determined that the identified net and net installation were in compliance with paragraph (c)(3) of this section (§ 1926.502) and the signature of the person making the determination and certification. The most recent certification record for each net and net installation shall be available at the jobsite for inspection.

(5) Defective nets shall not be used. Safety nets shall be inspected at least once a week for wear, damage, and other deterioration. Defective components shall be removed from service. Safety nets shall also be inspected after any occurrence which could affect the integrity of the safety net system.

(6) Materials, scrap pieces, equipment, and tools which have fallen into the safety net shall be removed as soon as possible from the net and at least before the next work shift.

(7) The maximum size of each safety net mesh opening shall not exceed 36 square inches (230 cm) nor be longer than 6 inches (15 cm) on any side, and the opening, measured center-to-center of mesh ropes or webbing, shall not be longer than 6 inches (15 cm). All mesh crossings shall be secured to prevent enlargement of the mesh opening.

(8) Each safety net (or section of it) shall have a border rope for webbing with a minimum breaking strength of 5,000 pounds (22.2 kN).

(9) Connections between safety net panels shall be as strong as integral net components and shall be spaced not more than 6 inches (15 cm) apart.

(d) ''Personal fall arrest systems.'' Personal fall arrest systems and their use shall comply with the provisions set forth below. Effective January 1, 1998, body belts are not acceptable as part of a personal fall arrest system.

Note: The use of a body belt in a positioning device system is acceptable and is regulated under paragraph (e) of this section (§ 1926.502).

(1) Connectors shall be drop forged, pressed or formed steel, or made of equivalent materials.

(2) Connectors shall have a corrosion-resistant finish, and all surfaces and edges shall be smooth to prevent damage to interfacing parts of the system.

(3) Dee-rings and snaphooks shall have a minimum tensile strength of 5,000 pounds (22.2 kN).

(4) Dee-rings and snaphooks shall be proof-tested to a minimum tensile load of 3,600 pounds (16 kN) without cracking, breaking, or taking permanent deformation.

(5) Snaphooks shall be sized to be compatible with the member to which they are connected to prevent unintentional disengagement of the snaphook by depression of the snaphook keeper by the connected member, or shall be a locking type snaphook designed and used to prevent disengagement of the snaphook by the contact of the snaphook keeper by the connected member. Effective January 1, 1998, only locking type snaphooks shall be used.

(6) Unless the snaphook is a locking type and designed for the following connections, snaphooks shall not be engaged:

(i) directly to webbing, rope or wire rope;

(ii) to each other;

(iii) to a dee-ring to which another snaphook or other connector is attached;

(iv) to a horizontal lifeline; or

(v) to any object which is incompatibly shaped or dimensioned in relation to the snaphook such that unintentional disengagement could occur by the connected object being able to depress the snaphook keeper and release itself.

(7) On suspended scaffolds or similar work platforms with horizontal lifelines which may become vertical lifelines, the devices used to connect to a horizontal lifeline shall be capable of locking in both directions on the lifeline.

(8) Horizontal lifelines shall be designed, installed, and used, under the supervision of a qualified person, as part of a complete personal fall arrest system, which maintains a safety factor of at least two.

(9) Lanyards and vertical lifelines shall have a minimum breaking strength of 5,000 pounds (22.2 kN).

(10)(i) Except as provided in paragraph (d)(10)(ii) of this section [§ 1926.502], when vertical lifelines are used, each employee shall be attached to a separate lifeline.

(ii) During the construction of elevator shafts, two employees may be attached to the same lifeline in the hoistway, provided both employees are working atop a false car that is equipped with guardrails; the strength of the lifeline is 10,000 pounds [5,000 pounds per employee attached] (44.4 kN); and all other criteria specified in this paragraph for lifelines have been met.

(11) Lifelines shall be protected against being cut or abraded.

(12) Self-retracting lifelines and lanyards which automatically limit free fall distance to 2 feet (0.61 m) or less shall be capable of sustaining a minimum tensile load of 3,000 pounds (13.3 kN) applied to the device with the lifeline or lanyard in the fully extended position.

(13) Self-retracting lifelines and lanyards which do not limit free fall distance to 2 feet (0.61 m) or less, ripstitch lanyards, and tearing and deforming lanyards shall be capable of sustaining a minimum tensile load of 5,000 pounds (22.2 kN) applied to the device with the lifeline or lanyard in the fully extended position.

(14) Ropes and straps (webbing) used in lanyards, lifelines, and strength components of body belts and body harnesses shall be made from synthetic fibers.

(15) Anchorages used for attachment of personal fall arrest equipment shall be independent of any anchorage being used to support or suspend platforms and capable of supporting at least 5,000 pounds (22.2 kN) per employee attached, or shall be designed, installed, and used as follows:

(i) as part of a complete personal fall arrest system which maintains a safety factor of at least two; and

(ii) under the supervision of a qualified person.

(16) Personal fall arrest systems, when stopping a fall, shall:

(i) limit maximum arresting force on an employee to 900 pounds (4 kN) when used with a body belt;

(ii) limit maximum arresting force on an employee to 1,800 pounds (8 kN) when used with a body harness;

(iii) be rigged such that an employee can neither free fall more than 6 feet (1.8 m), nor contact any lower level;

(iv) bring an employee to a complete stop and limit maximum deceleration distance an employee travels to 3.5 feet (1.07 m); and,

(v) have sufficient strength to withstand twice the potential impact energy of an employee free falling a distance of 6 feet (1.8 m), or the free fall distance permitted by the system, whichever is less.

Note: If the personal fall arrest system meets the criteria and protocols contained in Appendix C to subpart M, and if the system is being used by an employee having a combined person and tool weight of less than 310 pounds (140 kg), the system will be considered to be in compliance with the provisions of paragraph (d)(16) of this section [§ 1926.502]. If the system is used by an employee having a combined tool and body weight of 310 pounds (140 kg) or more, then the employer must appropriately modify the criteria and protocols of the Appendix to provide proper protection for such heavier weights, or the system will not be deemed to be in compliance with the requirements of paragraph (d)(16) of this section (§ 1926.502).

(17) The attachment point of the body belt shall be located in the center of the wearer's back. The attachment point of the body harness shall be located in the center of the wearer's back near shoulder level, or above the wearer's head.

(18) Body belts, harnesses, and components shall be used only for employee

protection (as part of a personal fall arrest system or positioning device system) and not to hoist materials.

(19) Personal fall arrest systems and components subjected to impact loading shall be immediately removed from service and shall not be used again for employee protection until inspected and determined by a competent person to be undamaged and suitable for reuse.

(20) The employer shall provide for prompt rescue of employees in the event of a fall or shall assure that employees are able to rescue themselves.

(21) Personal fall arrest systems shall be inspected prior to each use for wear, damage and other deterioration, and defective components shall be removed from service.

(22) Body belts shall be at least one and five-eighths (1⅝) inches (4.1 cm) wide.

(23) Personal fall arrest systems shall not be attached to guardrail systems, nor shall they be attached to hoists except as specified in other subparts of this Part.

(24) When a personal fall arrest system is used at hoist areas, it shall be rigged to allow the movement of the employee only as far as the edge of the walking/working surface.

(e) *Positioning device systems.* Positioning device systems and their use shall conform to the following provisions:

(1) Positioning devices shall be rigged such that an employee cannot free fall more than 2 feet (.9 m).

(2) Positioning devices shall be secured to an anchorage capable of supporting at least twice the potential impact load of an employee's fall or 3,000 pounds (13.3 kN), whichever is greater.

(3) Connectors shall be drop forged, pressed or formed steel, or made of equivalent materials.

(4) Connectors shall have a corrosion-resistant finish, and all surfaces and edges shall be smooth to prevent damage to interfacing parts of this system.

(5) Connecting assemblies shall have a minimum tensile strength of 5,000 pounds (22.2 kN)

(6) Dee-rings and snaphooks shall be proof-tested to a minimum tensile load of 3,600 pounds (16 kN) without cracking, breaking, or taking permanent deformation.

(7) Snaphooks shall be sized to be compatible with the member to which they are connected to prevent unintentional disengagement of the snaphook by depression of the snaphook keeper by the connected member, or shall be a locking type snaphook designed and used to prevent disengagement of the snaphook by the contact of the snaphook keeper by the connected member. As of January 1, 1998, only locking type snaphooks shall be used.

(8) Unless the snaphook is a locking type and designed for the following connections, snaphooks shall not be engaged:

(i) directly to webbing, rope or wire rope;

(ii) to each other;

(iii) to a dee-ring to which another snaphook or other connector is attached;

(iv) to a horizontal lifeline; or to depress the snaphook keeper and release itself.

(v) to any object which is incompatibly shaped or dimensioned in relation to the snaphook such that unintentional disengagement could occur by the connected object being able to depress the snaphook keeper and release itself.

(9) Positioning device systems shall be inspected prior to each use for wear, damage, and other deterioration, and defective components shall be removed from service.

(10) Body belts, harnesses, and components shall be used only for employee protection (as part of a personal fall arrest system or positioning device system) and not to hoist materials.

Appendix H to Subpart R--- Double Connections: Illustration of a Clipped End Connection and a Staggered Connection: Non-Mandatory Guidelines for Complying with §1926.756(c)(1).

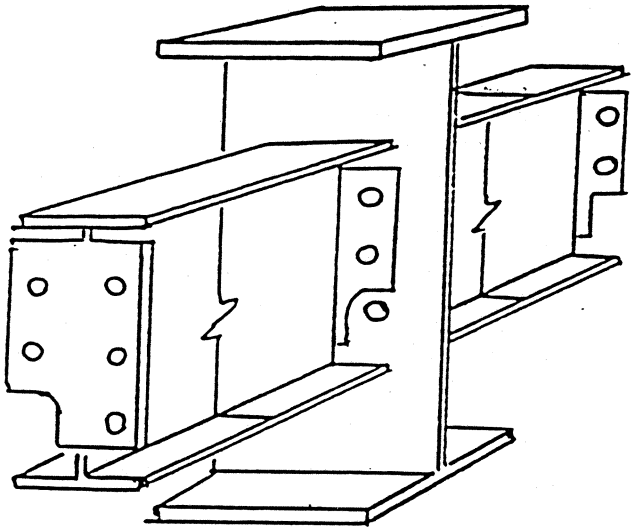

Clipped end connections are connection material on the end of a structural member which has a notch at the bottom and/or top to allow the bolt(s) of the first member placed on the opposite side of the central member to remain in place. The notch(es)

fits around the nut or bolt head of the opposing member to allow the second member to be bolted up without removing the bolt(s) holding the first member.

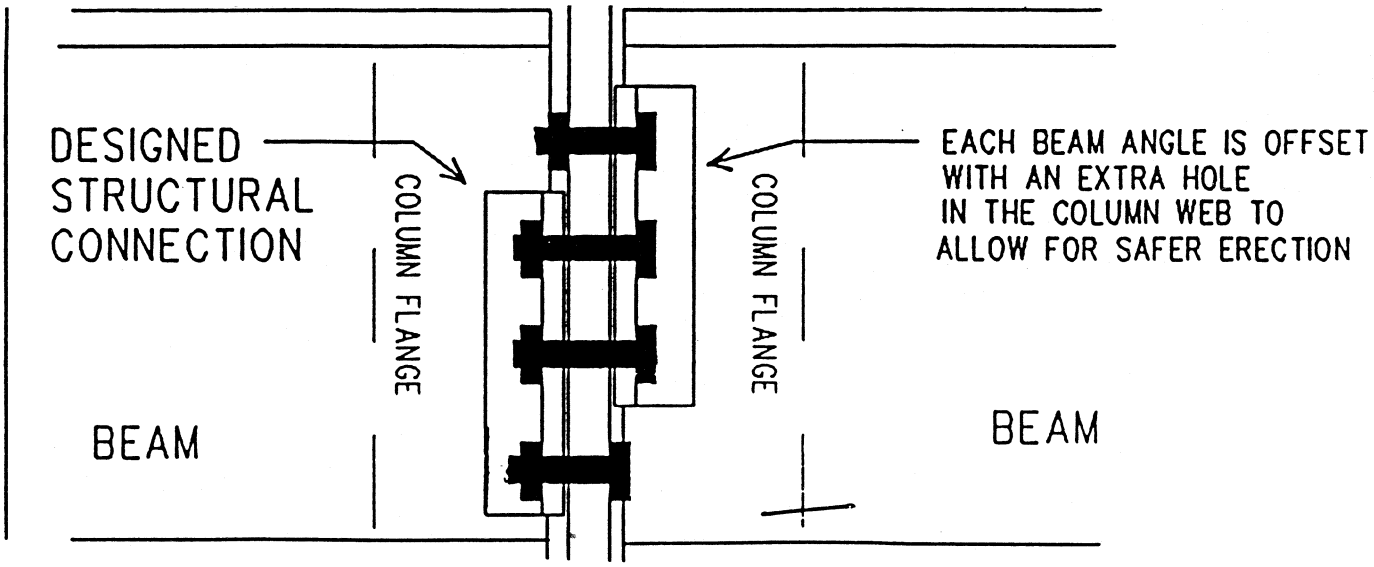

Staggered connections are connection material on a structural member in which all of the bolt holes in the common member web are not shared by the two incoming members in the final connection. The extra hole in the column web allows the erector to maintain at least a one bolt connection at all times while making the double connection.

[FR Doc. 01–979 Filed 1–17–01; 8:45 am]

BILLING CODE 4510–26–P

Federal Register

Thursday,
January 18, 2001

Part VII

Department of the Interior

Fish and Wildlife Service

50 CFR Part 86

Boating Infrastructure Grant Program; Final Rule

DEPARTMENT OF THE INTERIOR

Fish and Wildlife Service

50 CFR Part 86

RIN 1018–AF38

Boating Infrastructure Grant Program

AGENCY: Fish and Wildlife Service, Interior.

ACTION: Final rule.

SUMMARY: This regulation provides for the uniform administration of the national Boating Infrastructure Grant Program and survey authorized by Section 7404 of the Sportfishing and Boating Safety Act of 1998. Through this program, the U.S. Fish and Wildlife Service will provide funds to States to install or upgrade tie-up facilities for transient recreational boats 26 feet or more in length.

DATES: This rule is effective on February 20, 2001.

ADDRESSES: The administrative record for this rule, including copies of comments received, is available for viewing Monday through Friday, 8 am to 4 pm, in the Division of Federal Aid, 4401 North Fairfax Drive, Room 140, Arlington, VA 22203.

FOR FURTHER INFORMATION CONTACT: Steve Farrell, Project Officer, U.S. Fish and Wildlife Service, Division of Federal Aid, 4401 North Fairfax Drive, Suite 140, Arlington, Virginia 22203; telephone (703) 358–2156; fax (703) 358–1705; email <steve_farrell@fws.gov>.

SUPPLEMENTARY INFORMATION:

Background

Economic Status of Boating in the United States

Historically, coastal and inland waterways were the first highways along our shores and into the interior of the continent. Americans used boats almost exclusively for transportation of people and goods. Today we use more than 12 million recreational boats to cruise and fish. Recreational boating is now a significant economic activity in many areas of the country and in many respects exceeds that of waterborne commerce. Given the present demographic forces, we expect this rule to have a positive economic impact by adding facilities to accommodate larger cruising boats.

Purpose of the Boating Infrastructure Grant Program

Recreational boats 26 feet or more in length, called ''nontrailerable'' boats, represent about 4 percent, or more than 600,000, of the recreational boats in the United States. Although we have approximately 12,000 marinas in the United States, Congress recognized that insufficient tie-up facilities exist for transient, nontrailerable boats for reasonable and convenient access from our navigable waters. These boaters are unable to enjoy many recreational, cultural, historic, scenic, and natural resources of the United States. We also have an insufficient quantity of marinas or commercial tie-up facilities along extended stretches of our coastlines and rivers that benefit transient, nontrailerable boats. In many parts of the country, the number of places to tie-up, moor, or anchor a cruising boat, especially during a storm, is limited. Basic features, such as tie-ups, fuel, utilities, and restrooms, are often nonexistent. As a result, Congress passed the Sport Fishing and Boating Safety Act of 1998 (16 U.S.C. 777g). Under the Act, the U.S. Fish and Wildlife Service conducts the Boating Infrastructure Grant (BIG) Program. The BIG Program will provide $32 million to States and Territories over 4 years to construct, renovate, or maintain tie-up facilities for recreational boats 26 feet or more in length.

This program will:

(a) Create dockage for transient recreational boats 26 feet or more in length for recreational opportunities and safe harbors;

(b) Provide navigational aids for boaters to use these facilities;

(c) Enhance access to recreational, historic, cultural, natural, and scenic resources;

(d) Strengthen local ties to the boating community and its economic benefits;

(e) Promote public/private partnerships and entrepreneurial opportunities;

(f) Provide continuity of public access to the shore; and

(g) Promote awareness of transient boating opportunities.

The Act also directs us to:

(a) Develop a national framework or methodology to conduct a boat access needs assessment or survey to determine the adequacy of facilities for recreational boats of all sizes;

(b) Encourage States to complete the boat access needs survey; and

(c) Complete a comprehensive national assessment of boat access needs and facilities (the assessment will be a compilation of information from the States' surveys into a national report of boat access needs).

Analysis of Public Comments and Changes Made to the Proposed Rule

On January 20, 2000, the U.S. Fish and Wildlife Service (Service) published a proposed rule in the **Federal Register** (65 FR 3331) and requested comments on the proposed rule and information collection for the national BIG Program. The Service received 13 written responses by the close of the comment period on March 20, 2000. The responses came from nongovernmental organizations, a private individual, and Federal and State employees and agencies.

We received a total of 170 comments from the 13 written responses covering the following areas: survey (74), criteria for selection (11), State plans (8), clarifications (3), suspected typographical errors (3), and comments of a general nature (71). We may not reflect these actual numbers in the list below due to combining similar comments or questions. We have addressed all of the comments in this section of the preamble and made any necessary changes to the proposed rule. As a result, some sections of the proposed rule were combined or eliminated. Comments pertaining to the proposed information collection are addressed under Substantive Comments, Issues 1 through 9.

The following is clarification or analysis and reporting of any substantial changes to the rule that the Service made in response to these comments. The Service also corrected other minor errors in the proposed rule, as described below.

Minor Changes

In § 86.12(n), in response to a comment asking us to define ''transient,'' we are adding the following definition, ''Passing through or by a place, staying 10 days or less.''

In § 86.13(d), we changed ''seasonal'' to ''transient'' to avoid confusing wording.

In § 86.13(f), in response to a suggestion, we added ''docks'' after the word ''floating'' to clarify.

In § 86.13, in response to suggestions, we added at paragraphs (o), (p), and (q), ''dockside'' to clarify where utilities are placed.

In § 86.13, in response to a suggestion, we added ''(r) Debris deflection booms.''

In § 86.13, in response to suggestions, we added ''(s) Marine fueling stations.''

In § 86.20(a)(1), in response to a suggestion, we added a second sentence as follows: ''You must design new construction and renovations to last at least 20 years.''

In § 86.20(e)(1), in response to a suggestion, we deleted from

subparagraph (vii) to end, as the activities listed in the proposed rule are not appropriate preconstruction activities.

In § 86.20, in response to a suggestion, we added a new item, ''(f) Produce information and education materials such as charts, cruising guides, and brochures.''

In § 86.21(d), in response to a suggestion, we changed the sentence to read: ''Construct or renovate principal structures not expected to last at least 20 years.''

In § 86.44(b), in response to a suggestion, we replaced ''* * * we will'' with ''* * * The State must * * *''

In § 86.54(f)(1)(i) in the proposed rule (now § 86.53(d)(1)(i)), in response to several comments, we changed the section to clarify that no State Tier One proposal may exceed $100,000 in any given fiscal year.

Substantive Changes

Issue 1. Questions and comments on the survey included issues of respondent burden (how long to complete a section), unclear questions, issues of confidentiality, site-specific questions, and the value of answers to specific questions in determining national need.

Response: In response to all of the comments received on the technical aspects of the proposed survey, we completed significant revisions to the survey instrument. We considered all comments and redesigned the survey, improved guidance and questions, and decreased the time burden for completion. The revised survey began its approval process when it was published in the **Federal Register** (65 FR 63606) on October 24, 2000 for a 60-day public comment period. The survey will be ready for use during the FY 2001 grant cycle, and the Service will notify eligible applicants upon receiving OMB approval.

Issue 2. How can States pay for the survey?

Response: States can pay the costs for conducting the survey using Federal Aid in Sport Fish Restoration program funds, and credit expenditures toward the 15% minimum used for motor boat access (16 U.S.C. 777g (g)(4)).

Issue 3. Is the survey required?

Response: The Service does not require States to conduct surveys to receive funding under the national BIG program. However, the Service must produce a comprehensive national assessment of recreational boat access needs and facilities. The States, by conducting and forwarding their survey results to the Service, are ensuring that their needs are known (16 U.S.C. 777g (g)(2)). States may use existing, recent survey results, approved by the appropriate Service Regional Office, to determine boating infrastructure needs (§ 86.113).

Issue 4. States completing a survey should receive ranking points.

Response: No ''points'' are assigned in the criteria for completing a survey; the only available points are outlined in § 86.60. States must use the survey results to develop a State plan for boating infrastructure. The plan (any plan certified by the Service Regional Office) is then eligible for 15 ranking points.

Issue 5. Can States add questions to the survey?

Response: States cannot add any questions to the survey. If OMB approves the final survey as written, we will reimburse States only for administering it as approved.

Issue 6. Typographical errors occur in the survey tables.

Response: We fixed typographical errors in both tables describing the type of participant in survey parts.

Issue 7. States should submit survey results electronically.

Response: The Service wants the results transmitted to the Service Regional Offices in a common electronic format, such as Microsoft Word, Word Perfect, Excel or Quattro Pro. We added a requirement regarding electronic transmission of results to § 86.111.

Issue 8. Clarify ''boat service providers'' as the term relates to public access.

Response: We changed § 86.102(b)(2)(i) and (ii) to include a phrase that specifies boat service providers ''who allow public access.''

Issue 9. What are the survey response rate requirements?

Response: We changed § 86.115 to read ''plus or minus 10 percent.'' We also replaced the language that suggests a 70 percent response rate with language that says the State is responsible for selecting a statistically valid sample size.

Issue 10. In § 86.60, the points do not add up to 100, or no points are allowed for completing surveys.

Response: This section needed several minor editorial changes to make it clear and concise. Among these, we changed the point total to 105. The issue regarding awarding points for completing surveys is addressed in Issue 4.

Issue 11. According to § 86.54, why are proposals that are awarded less than 60 points when held to the criteria in § 86.60 automatically moved to Tier Two?

Response: We removed this ''60 point'' break when we revised the Tier One/Two break.

Issue 12. By awarding 15 points for a State plan, the Service is making State plans mandatory, penalizing all nonplan proposals.

Response: State plans are desirable under the Act (16 U.S.C. 777g (g)). They help set priorities and describe how a State will fulfill recreational boaters' needs. We can also use plans to help set national priorities in the comprehensive national assessment of recreational boat access needs and facilities described in the Act. The plan nonetheless is optional. The Act states, ''A State may develop a plan for,'' and in the proposed rule, § 86.131 states ''Plans are voluntary.'' However, the Service will award 15 criteria points to any acceptable plan, already existing and current, or a newly developed plan based on the OMB-approved survey or other recent approved survey results. The reason for the 15 criteria points is that projects coming from an accepted plan will establish priorities based on a formal needs assessment.

Issue 13. Add a statement to identify priorities in the State plan in § 86.60(b)(1).

Response: We added to § 86.60(b)(1), after the word ''following'' ''priorities identified in'' your State's program plan. We also agreed with the second thought presented in this comment and changed ''construct and renovate'' to ''construct, renovate, and maintain.''

Issue 14. Change the point values assigned to certain criteria.

Response: We are not making a change to the final rule as a result of this comment. We believe that we did a thorough job of stakeholder involvement when we assigned these point values.

Issue 15. A possible conflict exists in § 86.60(b)(4) about match funds.

Response: We have changed § 86.60(b)(4) to read ''Include private, local, or other State funds in addition to the non-Federal match described in § 86.42.''

Issue 16. Because of typographical errors in § 86.60(b)(4)(i), the percentage range was left out.

Response: In § 86.60(b)(4), we changed paragraph (i) to read ''Twenty-six percent to thirty-five percent—5 points,'' paragraph (ii) to remove the word ''above'' at the end, and paragraph (iii) to insert the word ''and'' so it reads ''Fifty percent and above—15 points.''

Issue 17. Add the word ''proposed'' before ''tie-up'' to the second sentence in § 86.60(b)(5), and delete the word ''access'' from the same sentence.

Response: We do not believe this suggestion adds to the clarity of the

sentence. We are making no changes to the proposed rule as a result of this comment.

Issue 18. In § 86.60(b)(6), change the wording of the sentence to restrict the sites to those near population centers and raise the value of the points assigned.

Response: We believe this change would unnecessarily restrict State proposals. We believe the sentence is clear and the points are appropriate. The sentence remains unchanged.

Issue 19. In § 86.60(b)(7), substitute ''enhanced opportunities'' for ''access.''

Response: We are not changing this paragraph as a result of this comment because we believe the sentence is clear as written.

Issue 20. In § 86.60(b)(8), add ''adjacent'' before the word ''community,'' and add ''as the result of construction, renovation, or increased use,'' at the end of the first sentence.

Response: We believe this change would unnecessarily restrict the program criteria. The proposed sentence stands unchanged.

Issue 21. Allow Tier One dollars to finance State plans because not to do so creates an unfunded Federal mandate.

Response: The Act states that ''* * * a State may develop and submit to the Secretary a plan for* * * ,'' not ''must'' (16 U.S.C. 777g–1 (c)). A mandate does not exist. However, States may do planning under other Sport Fish Restoration Act grant programs for purposes eligible under those programs and apply the resulting plan to the BIG Program.

Issue 22. Will the Service accept existing plans?

Response: The Service will accept any plan certified by the appropriate Service Regional Office that ensures that public boat access is and will be adequate to meet the needs of recreational boaters on your State's waters (§ 86.134).

Issue 23. What are the products of the National Assessment?

Response: The products of the Comprehensive National Assessment are listed in § 86.124.

Issue 24. Complying with the National Environmental Policy Act and the Endangered Species Act could cause up to 2 years of delay.

Response: All grantees must agree to and certify compliance with all applicable Federal laws. We use a certified ''Assurances'' statement. We are making no changes to the proposed rule as a result of this comment.

Issue 25. Can States use consultant fees, design, permitting, and construction administration costs as match for Tier One projects?

Response: Allowable matching and cost-sharing regulations are in 43 CFR 12.64; specific questions should be directed to the appropriate Service Regional Office.

Issue 26. Reduce match to where local governments or small marinas can compete for funds.

Response: In accordance with the Act, only States are eligible for funding under this grant program.

Issue 27. Are pre-award costs allowable?

Response: Only as described under § 86.20.

Issue 28. Who assumes the administrative burden after the program expires in 3 years?

Response: We discuss maintenance of approved projects in 50 CFR 80.17.

Issue 29. How much money can we charge the public to tie-up?

Response: The going rate in the locality determines the amount for the facility. We are making no change to the proposed rule as a result of this comment.

Issue 30. For projects in Tier Two that exceed available funding in Tier Two, what is the methodology for awarding funds other than what States request?

Response: There is none. We cannot exceed established spending levels. If a State requires funds from two or more different programs to obtain full funding, the State is responsible for securing the funds.

Issue 31. In § 86.20(a)(3), substitute ''deep enough'' for ''6 feet of depth at the lowest tide * * * .''

Response: We researched these depths before making this specification, and we are not making the recommended change.

Issue 32. In § 86.20(a)(5)(iii), delete the reference to ''this program,'' so that the sentence reads: ''You may use funds from the Clean Vessel Act Program.''

Response: We encourage the construction of pumpout stations with either set of funds. We are making no changes to the proposed rule as a result of this comment.

Issue 33. In § 86.20(e)(1), add ''contract documents.''

Response: No contract should be prepared and awarded until after we sign a grant; therefore, contract documents are not allowed as a pre-agreement cost. We are making no changes to the proposed rule as a result of this comment.

Issue 34. In § 86.21(e) and (g), add note on one-time dredging to (e) and add dinghy docks to (g).

Response: We address one-time dredging in § 86.20, and dinghy docks are not for transient vessels more than 26 feet in length. We are making no changes to the proposed rule as a result of this comment.

Issue 35. In § 86.21, make the State plan eligible for funding under BIG.

Response: State plans are eligible activities under the Sport Fish Restoration Act (16 U.S.C. 777).

Issue 36. In accordance with § 86.30, must I allow the public to use grant-funded facilities?

Response: Yes, § 86.30 specifies that reasonable access must be allowed and explains what that means.

Issue 37. In regard to § 86.54, one responder commented that the criterion referenced in § 86.60 was developed for competitive Tier Two projects and was not meant for Tier One projects. Tier One project funding was developed for States meeting the requirements in §§ 86.13 and 86.20.

Response: We agree and will change § 86.54(f)(1)(ii) (now § 86.53(d)(1)(ii) in the final rule) to read ''* * * using the eligibility requirements in §§ 86.14 and 86.20.'' (Section 86.13 from the proposed rule has become § 86.14 in the final rule.)

Issue 38. In regard to § 86.55(f), why are two sets of $100,000 proposals required? Why not require one $200,000 proposal?

Response: Tier One proposals in the first grant cycle will be funded by 2 different fiscal years. To provide additional clarity, we replaced the second sentence in § 86.55(f) (now § 86.54(f)) with wording similar to the following, ''We will fund one proposal for each fiscal year provided that each proposal meets the eligibility requirements in §§ 86.13 (now 86.14) and 86.20.''

Issue 39. Sections 86.20 and 86.21 conflict in useful life of some outputs.

Response: We do not agree. Principal structures expected to last 20 years or more are different from navigational aids which may have a shorter lifespan. Only principal structures must be designed to last at least 20 years, therefore a conflict does not exist.

Issue 40. In regard to § 86.56, after the Service awards funds for a project, if it is found not to meet compliance requirements, where will these funds go?

Response: If a State cannot bring the project into compliance according to § 86.56 (now § 86.55), the funds may revert as required by the Act (16 U.S.C. 777c).

Issue 41. Regarding § 86.60(b), a respondent recommended considering construction in remote areas in the scoring priority and adding a statement to the Regulatory Flexibility Act section to give criteria points for remote sites.

Response: Section 86.60(b)(6) and (7) considers remote areas as they relate to significant links to prominent

destinations, way-points, and national, regional, and local significant areas. Therefore, we do not see the need to alter the present guidance.

Issue 42. In § 86.60(b)(8), how will we assess ''significant positive economic impact?''

Response: States should assess the economic impact of projects using a cost/benefit analysis as described in the example in § 86.60(b)(8). States should address this issue, along with all the other criteria, in the grant proposal.

Issue 43. In § 86.82(b), replace the word ''slippage'' with ''deviation.''

Response: ''Slippage'' is the term used in 43 CFR 12.80(b)(2)(ii), which provides reporting requirements for assistance programs. We are making no changes to the proposed rule as a result of this comment.

Issue 44. In § 86.80, remove the requirement for quarterly reports.

Response: We are removing the requirement for quarterly reporting for Tier One projects only, according to 43 CFR 12.80, Monitoring and Reporting Program Performance.

Issue 45. In § 86.91, make States give credit to the Sport Fish Restoration Program for BIG grants.

Response: Credit to the Sport Fish Restoration Program remains optional. We have nothing on which to base making this issue mandatory. We are changing ''may'' in the last sentence to ''* * * are encouraged to * * *''.

Issue 46. Could priority for services at tie-up facilities be given to transient boats over 26 feet in length? If so, how would States enforce the priority?

Response: No. While we intend the program to benefit transient, nontrailerable boats, States must give equal public access to all boaters. Consequently, enforcement is unnecessary.

Issue 47. The Service Director should convene a nongovernmental advisory committee to provide expertise on ''recreational boating facilities needs.''

Response: Under the Federal Advisory Committee Act (Pub. L. 92–463, 5 U.S.C. App.1), requirements for creating an advisory committee would significantly delay the distribution of the first cycle grant funds. However, opportunities may exist for the nongovernmental community to participate in the grant selection process, and the Service will investigate such opportunities.

Issue 48. Are maintenance and operation costs in remote areas eligible under § 86.20(4)?

Response: We cover maintenance under § 86.20(a); we specifically exclude operation and janitorial costs under § 86.21.

Issue 49. Provide sufficient time to rank and award proposals.

Response: We changed the application period for the first grant cycle to allow applicants 90 days to submit grant proposals to the appropriate Service Regional Office. This change occurs in § 86.50.

Regulatory Planning and Review (E.O. 12866)

In accordance with the criteria in Executive Order 12866, this rule is a significant regulatory action according to the following:

(a) This rule will not have an annual economic effect of $100 million or adversely affect an economic sector, productivity, jobs, the environment, or other units of government. Program funds total $8 million per year for 4 years, for a total of $32 million. Program funds for surveys total $1,050,000. States must match these amounts with 25 percent or $2 million per year. State match totals $8 million over 4 years. The program will not negatively affect an economic sector, productivity, jobs, and other units of government. The program will have a positive effect on these factors.

(b) This rule will not create inconsistencies with other agencies' actions. We will require the necessary Federal, State, and local reviews and permits before allowing construction of all facilities approved under the program. These reviews will ensure that this rule will not create inconsistencies with other agencies' actions.

(c) This rule will materially affect entitlements, grants, user fees, loan programs, or the rights and obligations of their recipients. This rule establishes a new grant program using existing funds that are otherwise available to State natural resource agencies under the Sport Fish Restoration Act (16 U.S.C. 777–777m). Recipients will voluntarily accept all stipulations prior to the Service awarding funds for facility construction. The program only obligates the recipient to maintain the facility. User fees are not mandatory and the program allows only enough charges to maintain the facility established by the grant.

(d) This rule will not raise novel legal or policy issues. This program will award funds to States to install facilities for transient nontrailerable boats. We will review all actions for compliance with the National Environmental Policy Act. This grant program is similar to past Federal Aid grant programs for construction of facilities.

Regulatory Flexibility Act

The Department certifies that this document will not have a significant economic effect on a substantial number of small entities under the Regulatory Flexibility Act (5 U.S.C. 601 *et seq.*). Eight million dollars will be available annually for a 4-year period. The effects of these regulations occur to agencies in the States, Puerto Rico, Guam, the Virgin Islands, American Samoa, the District of Columbia, and the Northern Mariana Islands. These are not small entities under the Regulatory Flexibility Act. Some small entities, mainly marina operators, may receive grant funds. The program will place facilities where none exist now, in remote areas where no competition exists, and in populated areas where marinas have not previously installed them. Employment, investment, productivity, and innovation should all increase because the program will construct facilities to attract transient boaters. The result will be a net transfer of expenditures in the area. U.S.-based enterprises' ability to compete with foreign-based enterprises should not be affected by this rule.

Small Business Regulatory Enforcement Fairness Act (SBREFA)

This regulation is not a major rule under 5 U.S.C. 804(2), the Small Business Regulatory Enforcement Fairness Act, as discussed in the Regulatory Planning and Review and Regulatory Flexibility Act sections above.

Unfunded Mandates Reform Act

This regulation does not impose an unfunded mandate on State, local, or tribal governments or the private sector of more than $100 million per year. This regulation does not have a significant or unique effect on State, local, tribal governments, or the private sector. The rule establishes a grant program that States may participate in voluntarily. A statement containing the information required by the Unfunded Mandates Reform Act (2 U.S.C. 1531 *et seq.*) is not necessary.

Takings (E.O. 12630)

In compliance with Executive Order 12630, this regulation does not have significant takings implications. The rule provides standardized procedures for administering a Federal discretionary grant program.

Federalism Assessment (E.O. 13132)

In compliance with Executive Order 13132, this regulation does not have sufficient Federalism implications to warrant the preparation of a Federalism Assessment. Through this regulation,

eligible States will receive grants for construction, renovation, maintenance of boating facilities, and public information and education programs. Therefore, the rule is consistent with Executive Order 13132.

Civil Justice Reform (E.O. 12988)

In compliance with Executive Order 12988, the Office of the Solicitor has determined that this regulation does not unduly burden the judicial system and meets the requirements of §§ 3(a) and 3(b)(2) of the Order.

Paperwork Reduction Act

The information collection requirements contained in this regulation are only those necessary to fulfill applicable grant application requirements of 43 CFR Part 12; see 43 CFR 12.4 for information concerning OMB approval of those requirements. We have submitted the collections of information contained in this rule to the Office of Management and Budget for approval as required under 44 U.S.C. 3501 *et seq.* The Service will not collect this information until OMB has granted us approval. Additionally, no person may be required to respond to a collection of information unless it displays a currently valid OMB number.

The information collection requirement related to the surveys has a current OMB Approval Number 1018–0106 under the provisions of 44 U.S.C. 3501 *et seq.* In response to the comments received on the technical aspects of the proposed survey, we revised the survey improving the guidance, questions, and a lower time burden for completion.

What Intergovernmental Review Procedures Must I as a State follow?

Executive Order 12372, ''Intergovernmental Review of Federal Programs,'' and 43 CFR Part 9, ''Intergovernmental Review of Department of the Interior Programs and Activities,'' applies to the national BIG Program. Under the Order, you may design your own processes to review and comment on proposed Federal assistance under covered programs.

What Is My Responsibility as a State if I Participate in the Executive Order Process Having Single Points of Contact?

You should alert your Single Points of Contact (SPOC) to the prospective applications and receive any necessary instructions to provide material the SPOC requires. You must submit all required materials, if any, to the SPOC and show the date of this submittal (or the date of contact if the SPOC does not require submittal) on the narrative. If you are from a State that chooses to exempt the grants, you need take no action regarding E.O. 12372.

Author

The principal author of this rule is Steve Farrell, Project Officer, U.S. Fish and Wildlife Service, Division of Federal Aid, 4401 North Fairfax Drive, Suite 140, Arlington, Virginia 22203.

Regulation Promulgation

Accordingly, the Service hereby establishes part 86, subchapter F of Chapter I, Title 50 Code of Federal Regulations, as set forth below:

List of Subjects in 50 CFR Part 86

Administrative practice and procedure, Boats and boating, Grant programs—recreation, Natural resources, Recreation and recreation areas, Reporting and record keeping requirements.

For the reasons set out in the preamble, we amend Subchapter F of Chapter I, Title 50 of the Code of Federal Regulations, by adding a new part 86 to read as follows.

PART 86—BOATING INFRASTRUCTURE GRANT (BIG) PROGRAM

Subpart A—General Information About the Grant Program

Sec.
86.10 What does this regulation do?
86.11 What does the national BIG Program do?
86.12 Definitions of Terms Used in Part 86
86.13 What is boating infrastructure?
86.14 Who may apply for these grants?
86.15 How does the grant process work?
86.16 What are the information collection requirements?

Subpart B—Funding State Grant Proposals

86.20 What activities are eligible for funding?
86.21 What activities are ineligible for funding?

Subpart C—Public Use of the Facility

86.30 Must I allow the public to use the grant-funded facilities?
86.31 How much money may I charge the public to use tie-up facilities?

Subpart D—Funding Availability

86.40 How much money is available for grants?
86.41 How long will the money be available?
86.42 What are the match requirements?
86.43 May someone else supply the match?
86.44 What are my allowable costs?
86.45 When will I receive the funds?

Subpart E—How States Apply for Grants

86.50 When must I apply?
86.51 To whom must I apply?
86.52 What information must I include in my grant proposals?
86.53 What are funding tiers?
86.54 How must I submit proposals?
86.55 What are my compliance requirements with Federal laws, regulations, and policies?

Subpart F—How the Service Selects Projects To Receive Grants

86.60 What are the criteria used to select projects for grants?
86.61 What process does the Service use to select projects for grants?
86.62 What must I do after my project has been selected?
86.63 May I appeal if my project is not selected?

Subpart G—How States Manage Grants

86.70 What are my requirements to acquire, install, operate, and maintain real and personal property?
86.71 How will I be reimbursed?
86.72 Do any other Federal requirements apply to this program?
86.73 What if I do not spend all the money?
86.74 What if I need more money?

Subpart H—Reporting Requirements for the States

86.80 What are my reporting requirements for this grant program?
86.81 When are the reports due?
86.82 What must be in the reports?

Subpart I—State Use of Signs and Sport Fish Restoration Symbols

86.90 What are my responsibilities for information signs?
86.91 What are my program crediting responsibilities?
86.92 Who can use the SFR logo?
86.93 Where should I use the SFR logo?
86.94 What crediting language should I use?

Subpart J—Service Completion of the National Framework

86.100 What is the National Framework?
86.101 What is the Service schedule to adopt the National Framework?
86.102 How did the Service design the National Framework?

Subpart K—How States Will Complete a Boat Access Needs Survey (Survey)

86.110 What does the survey do?
86.111 Must I do a survey?
86.112 What are the advantages of doing a survey?
86.113 What if I have recently completed a survey?
86.114 Do I need to conduct a survey if I already have a plan for installing tie-up facilities?
86.115 How should I administer the survey?
86.116 May I change the questions in the survey?
86.117 [Reserved]
86.118 What does this survey include?

Subpart L—Completing the Comprehensive National Assessment

86.120 What is the Comprehensive National Assessment?
86.121 What does the Comprehensive National Assessment do?

86.122 Who completes the Comprehensive National Assessment?
86.123 Comprehensive National Assessment schedule.
86.124 What are the Comprehensive National Assessment products?

Subpart M—How States Will Complete the State Program Plans

86.130 What does the State program plan do?
86.131 Must I do a plan?
86.132 What are the advantages to doing a plan?
86.133 What are the plan standards?
86.134 What if I am already carrying out a plan?
86.135 [Reserved]
86.136 What must be in the plan?
86.137 What variables should I consider?

Authority: 16 U.S.C. 777g, 777g–1.

Subpart A—General Information About the Grant Program

§ 86.10 What does this regulation do?

In this part, the terms ''I,'' ''you,'' ''my,'' and ''your'' refer to the State agency seeking participation in the national Boating Infrastructure Grant (BIG) Program. ''We'' and ''us'' refers to the Fish and Wildlife Service. This part establishes your requirements under the Sportfishing and Boating Safety Act of 1998 to:

(a) Participate in the national BIG Program,

(b) Complete your boat access survey, and

(c) Develop State plans to install tie-up facilities for transient nontrailerable recreational vessels.

§ 86.11 What does the national BIG Program do?

This program provides funds for States to construct, renovate, and maintain tie-up facilities with features for transient boaters in vessels 26 feet or more in length, and to produce and distribute information and educational materials about the program.

§ 86.12 Definitions of terms used in part 86.

For the purposes of this part, the following terms are defined:

Construct means engaging in activities that produce new capital improvements and increase the value or usefulness of existing property. These activities include building new tie-up facilities or replacing or expanding existing tie-up facilities.

Grant means financial assistance the Federal Government awards to an eligible applicant.

Grant agreement means a contractual agreement used to obligate Federal Aid funds for carrying out work covered by an approved grant proposal.

Maintain means engaging in activities that allow the facility to continue to function, such as repairing docks. These activities exclude routine janitorial activities.

Navigable waters means waters connected to or part of the jurisdictional waters of the United States that transient nontrailerable recreational vessels currently use or can use.

Nontrailerable recreational vessels mean motorized boats 26 feet or more in length manufactured for and operated primarily for pleasure, including vessels leased, rented, or chartered to another person for his or her pleasure.

Project means a specific plan or design.

Proposal means a description of one or more projects for which a State requests grant funds.

Recreational waters means navigable waters that vessels use for recreational purposes.

Renovate means to rehabilitate or repair a tie-up facility to restore it to its original intended purpose, or to expand its purpose to allow transient nontrailerable recreational vessels.

States means individual States within the United States, the District of Columbia, the Commonwealth of Puerto Rico, Guam, American Samoa, the Virgin Islands, and the Commonwealth of the Northern Mariana Islands.

Survey instrument means a tool developed by the Service and approved by OMB to assess the need for boating facilities.

Tie-up facilities mean facilities that transient nontrailerable recreational vessels occupy temporarily, not to exceed 10 consecutive days; for example, temporary shelter from a storm; a way station en route to a destination; a mooring feature for fishing; or a dock to visit a recreational, historic, cultural, natural, or scenic site.

Transient means passing through or by a place, staying 10 days or less.

Water-body means the lake, section of river, or specific area of the coast, such as a harbor or cove, where tie-up facilities or boat access sites are located.

§ 86.13 What is boating infrastructure?

Boating infrastructure refers to features that provide stopover places for transient nontrailerable recreational vessels to tie up. These features include, but are not limited to:

(a) Mooring buoys (permanently anchored floats designed to tie up nontrailerable recreational vessels);

(b) Day-docks (tie-up facilities that do not allow overnight use);

(c) Navigational aids (*e.g.,* channel markers, buoys, and directional information);

(d) Transient slips (slips that boaters with nontrailerable recreational vessels occupy for no more than 10 consecutive days);

(e) Safe harbors (facilities protected from waves, wind, tides, ice, currents, etc., that provide a temporary safe anchorage point or harbor of refuge during storms);

(f) Floating docks and fixed piers;

(g) Floating and fixed breakwaters;

(h) Dinghy docks (floating or fixed platforms that boaters with nontrailerable recreational vessels use for a temporary tie-up of their small boats to reach the shore);

(i) Restrooms;

(j) Retaining walls;

(k) Bulkheads;

(l) Dockside utilities;

(m) Pumpout stations;

(n) Recycling and trash receptacles;

(o) Dockside electric service;

(p) Dockside water supplies;

(q) Dockside pay telephones;

(r) Debris deflection booms; and

(s) Marine fueling stations.

§ 86.14 Who may apply for these grants?

You, with authority from your State Government. You must identify one key contact only and submit proposals through this person.

§ 86.15 How does the grant process work?

To ensure that grants address the highest national priorities identified in the Act, we make funds available on a competitive basis. You must submit your proposals by the appropriate date as specified in § 86.50. You must address certain questions and criteria (listed in § 86.52) to be eligible and competitive. We will conduct a panel review of all proposals, and the Service Director will make the final grant awards. You may begin work on your project only after you receive a fully executed grant agreement.

§ 86.16 What are the information collection requirements?

This part contains both routine information collection and survey requirements, as follows:

(a) The routine information collection requirements for grants applications and associated record keeping contained in this part are only those necessary to fulfill applicable requirements of 43 CFR part 12. These requirements include record keeping and reporting requirements. See 43 CFR 12.4 for information concerning OMB approval of those requirements.

(b) The revised information collection requirements related to the surveys will be submitted to OMB for approval as changed. They will not be imposed until

we receive OMB approval under the provisions of 44 U.S.C. 3501 *et seq.* The surveys are voluntary and are for States to determine the adequacy, number, location, and quality of facilities that provide public access for all sizes of recreational boats. The public's burden estimate for the survey is as follows:

Type of information	Number of respondents*	Average time required per response (minutes)	Annual burden hours
Boat owners: Part A	11,200	12	2,240
Boat owners: Part B	28,000	12	5,600
Boat Service Providers: Part C	8,400	20	2,800
Boat Service Providers: Part D	4,000	20	1,333

*These numbers are not additive since some boaters will fill out both Parts A and B, and most of the providers will fill out both Parts C and D.

(c) Send comments regarding this collection of information to the Service Information Collection Clearance Officer, MS—222 ARLSQ, Fish and Wildlife Service, Washington, DC 20240, and the Office of Management and Budget, Department of Interior, Desk Officer, 1849 C Street, NW., Washington, DC 20503. An Agency may not conduct or sponsor, and a person is not required to respond to, a collection of information unless it displays a currently valid OMB control number. OMB has up to 60 days to approve or disapprove the information collection but may respond after 30 days. Therefore, to ensure maximum consideration, you must send your comments to OMB by the above referenced date.

Subpart B—Funding State Grant Proposals

§ 86.20 What activities are eligible for funding?

Your project is eligible for funding if you propose to:

(a) Construct, renovate, and maintain either publicly or privately owned boating infrastructure tie-up facilities. To be eligible you must:

(1) Build these tie-up facilities on navigable waters, available to the public. You must design new construction and renovations to last at least 20 years;

(2) Design these tie-up facilities for temporary use for transient nontrailerable recreational vessels;

(3) Build these tie-up facilities in water deep enough for nontrailerable recreational vessels to navigate (a minimum of 6 feet of depth at the lowest tide or other measure of lowest fluctuation);

(4) Provide security, safety, and service for these boats; and,

(5) Install a pumpout station, if you construct a facility for overnight stays:

(i) If there is already a pumpout within a reasonable distance (generally within 2 miles) of the facility, you may not need one;

(ii) For facilities intended as day stops, we encourage you to install a pumpout; and,

(iii) You may use funds from the BIG program, or the Clean Vessel Act pumpout grant program also administered by us, to pay for a pumpout station.

(b) Do one-time dredging only, to give transient vessels safe channel depths between the tie-up facility and maintained channels or open water.

(c) Install navigational aids, limited to giving transient vessels safe passage between the tie-up facility and maintained channels or open water.

(d) Apply funds to grant administration.

(e) Fund preliminary costs:

(1) Preliminary costs may include any of the following activities completed before signing a grant agreement:

(i) Conducting appraisals;

(ii) Administering environmental reviews and permitting;

(iii) Conducting technical feasibility studies, for example, studies about environmental, economic, and construction engineering concerns;

(iv) Carrying out site surveys and engaging in site planning;

(v) Preparing cost estimates; and

(vi) Preparing working drawings, construction plans, and specifications.

(2) We will fund preliminary costs only if we approve the project.

(3) If the project is approved, the appropriate Service Regional Director must still approve preliminary costs.

(f) Produce information and education materials such as charts, cruising guides, and brochures.

§ 86.21 What activities are ineligible for funding?

Your project is ineligible for funding if you propose to:

(a) Complete a project that does not provide public benefits, for instance, a project that is not open to the public for use;

(b) Involve law enforcement activities;

(c) Significantly degrade or destroy valuable natural resources or alter the cultural or historic nature of the area;

(d) Construct or renovate principal structures not expected to last at least 20 years;

(e) Do maintenance dredging;

(f) Fund operations or routine, custodial, and janitorial maintenance of the facility;

(g) Construct, renovate, or maintain boating infrastructure tie-up facilities for nontrailerable vessels, for example the following:

(1) Tie-up slips available for occupancy for more than 10 consecutive days by a single party;

(2) Dryland storage;

(3) Haul-out features; and

(4) Boating features for trailerable or ''car-top'' boats (boats less than 26 feet in length), such as launch ramps and carry-down walkways.

(h) Develop a State program plan to construct, renovate, and maintain boating infrastructure tie-up facilities; and

(i) Conduct surveys to determine boating access needs.

(1) You may conduct the survey with funds allocated to motorboat access to recreational waters under subsection (b)(1) of section 8 of the Federal Aid in Sport Fish Restoration Act of 1950, as amended (16 U.S.C. 777).

(2) You may combine surveys under one contractor where feasible if you can realize a cost or other savings.

Subpart C—Public Use of the Facility

§ 86.30 Must I allow the public to use the grant-funded facilities?

(a) You must allow reasonable access to all recreational vessels for the useful life of the tie-up facilities. Accessible to the public means located where the public can reasonably reach the facility and where all boats typical to that facility can easily use it, charging equitable fees, and being open for reasonable periods. You must allow public access to the shore and basic features such as fuel and restrooms in facilities that have them. You must specify precise details of the public access in the contract with the facility

manager. We do not require public access to the remainder of a park or marina where the facility is found. Nor do we require any restrictions in that park or marina.

(b) You must comply with Americans with Disabilities Act requirements when you construct or renovate all tie-up facilities under this grant.

§ 86.31 How much money may I charge the public to use tie-up facilities?

You may charge the public only a reasonable fee, based on the prevailing rate in the area. You must determine a fee that does not pose an unreasonable, competitive amount, based on other publicly and privately owned tie-up facilities in the area. You must approve any proposed changes in fee structure by a sub-grantee.

Subpart D—Funding Availability

§ 86.40 How much money is available for grants?

There is $32 million available for grants under the BIG program ($8 million per year for fiscal years 2000–2003).

§ 86.41 How long will the money be available?

Under the Act, funding for the BIG program is provided for FY 2000–2003. Each year's funds remain available for obligation for a total of three fiscal years (e.g. FY 2000 funds will remain available through FY 2002) (16 U.S.C. 777c(b)(3)(B)).

§ 86.42 What are the match requirements?

The Act authorizes the Secretary of the Interior (through the Director of the U.S. Fish and Wildlife Service (Service)) to award grants to States to pay up to 75 percent of the cost to construct, renovate, or maintain tie-up facilities for transient nontrailerable recreational vessels. You or a partner must pay the remaining project cost—at least a 25 percent match is required. Title 43 CFR 12.64 applies to cost sharing or matching requirements for Federal grants.

§ 86.43 May someone else supply the match?

Third-party contribution, including property and in-kind services, is allowable, but must be necessary and reasonable to accomplish grant objectives. In-kind contributions must also represent the current market value of noncash contributions that the third party furnishes as part of the grant.

§ 86.44 What are my allowable costs?

(a) The State may spend grant funds to pay only costs that are necessary and reasonable to accomplish the approved grant objectives. Grant costs must meet the applicable Federal cost principles in 43 CFR 12.62. You may purchase informational and program signs as allowable costs.

(b) If you include purposes other than those eligible under the Act, you must prorate the costs equitably according to Federal cost principles in 43 CFR 12.62 and 50 CFR 80.15.

§ 86.45 When will I receive the funds?

Once you sign the grant agreement, we will make the funds available.

Subpart E—How States Apply for Grants

§ 86.50 When must I apply?

(a) We will accept proposals between February 20, 2001, and May 18, 2001, for the first grant cycle; between July 1, 2001, and September 30, 2001, for the second grant cycle; and between July 1, 2002, and September 30, 2002, for the third grant cycle. This program starts fiscal year 2000 and ends fiscal year 2003. We will have $16 million to award the first grant cycle, and $8 million each cycle after that.

(b) The annual schedule follows:

Action	FY 2000–2001	FY 2002	FY 2003
We announce the beginning of the grant cycle.	February 20, 2001	July 1, 2001	July 1, 2002.
You submit your grant proposal by	May 18, 2001	September 30, 2001	September 30, 2002.
Regions submit the proposals to Washington by.	June 18, 2001	October 31, 2001	October 31, 2002.
We rank the proposals by	July 17, 2001	November 30, 2001	November 30, 2002.
The Director approves proposals by.	August 16, 2001	December 31, 2001	December 31, 2002.
Regions finalize their grant agreements by.	October 15, 2001	February 28, 2002	February 28, 2003.

§ 86.51 To whom must I apply?

You must submit your proposals to the appropriate regional office of the U.S. Fish and Wildlife Service. See the chart below for the address you will need.

Region	State	Address	Telephone
1	California, Hawaii, Idaho, Nevada, Oregon, Washington, American Samoa, Commonwealth of the Northern Mariana Islands, and Guam.	Division of Federal Aid, U.S. Fish & Wildlife Service, Eastside Federal Complex, 911 NE 11th Avenue, Portland, OR 97232–4181.	503–231–6128, Fax: 503–231–6996
2	Arizona, New Mexico, Oklahoma, and Texas.	Division of Federal Aid, U.S. Fish & Wildlife Service, P.O. Box 1306, 625 Silver, SW, Suite 325, Albuquerque, NM 87102.	505–248–7450, Fax: 505–248–7471
3	Illinois, Indiana, Iowa, Michigan, Minnesota, Missouri, Ohio, and Wisconsin.	Division of Federal Aid, U.S. Fish & Wildlife Service, Bishop Henry Whipple Federal Building, 1 Federal Drive, Fort Snelling, MN 55111–4056.	612–713–5130, Fax: 612–713–5290
4	Alabama, Arkansas, Florida, Georgia, Kentucky, Louisiana, Mississippi, North Carolina, South Carolina, Tennessee, Puerto Rico, and the Virgin Islands.	Division of Federal Aid, U.S. Fish & Wildlife Service, 1875 Century Boulevard, Suite 324, Atlanta, Georgia 30345.	404–679–4159, Fax: 404–679–4160

Region	State	Address	Telephone
5	Connecticut, Delaware, District of Columbia, Maine, Maryland, Massachusetts, New Hampshire, New Jersey, New York, Pennsylvania, Rhode Island, Vermont, Virginia, and West Virginia.	Division of Federal Aid, U.S. Fish & Wildlife Service, 300 Westgate Center Drive, Hadley, MA 01035–9589.	413–253–8200, Fax: 413–253–8487
6	Colorado, Kansas, Montana, Nebraska, North Dakota, South Dakota, Utah, and Wyoming.	Division of Federal Aid, U.S. Fish & Wildlife Service, Denver Federal Center, P.O. Box 25486, Lake Plaza North Building, 134 Union Boulevard, 4th Floor, Denver, Colorado 80225.	303–236–7392, Fax: 303–236–8192
7	Alaska	Division of Federal Aid, U.S. Fish & Wildlife Service, 1011 East Tudor Road, Anchorage, Alaska 99503.	907–786–3435, Fax: 907–786–3575

§ 86.52 What information must I include in my grant proposals?

You must submit the following standard forms and narrative for all projects (Tier One and Tier Two) (see § 86.53):

(a) Standard Form 424 series as prescribed by the Office of Management and Budget. The SF 424 series consists of the Applications for Federal Assistance (SF 424), Budget Information—Non-Construction Programs (SF 424A), Assurances—Non-Construction Programs (SF 424B), Budget Information—Construction Programs (SF 424C), and Assurances—Construction Programs (SF 424D). Submit forms appropriate for either construction or nonconstruction projects. Forms are available from your appropriate Service Regional Office.

(b) Information requested under OMB Circular A–102 (Application Booklet for Federal Aid Grants—pending approval under the Paperwork Reduction Act).

§ 86.53 What are funding tiers?

(a) This grant program will consist of two tiers of funding.

(i) You may apply for one or both tiers.

(ii) The two tiers will allow all States some certainty of base level funding.

(b) Tier One funding will ensure broad geographical distribution to meet the needs of transient nontrailerable recreational vessels.

(c) Tier Two funding will allow States with large projects to compete with other States with large projects based on individual project merits.

(d) We describe the two tiers as follows:

(1) *Tier One Projects.*

(i) You may submit a proposal with an unlimited number of projects within this tier. However, your total request cannot exceed $100,000 of Federal funds for any given fiscal year.

(ii) Tier One projects must meet the eligibility requirements in §§ 86.14 and 86.20.

(2) *Tier Two Projects.*

(i) While we expect available funds for Tier Two proposals to be between $3 million and $4 million per grant cycle, we have no dollar limit for Tier Two proposals. You may submit any number of projects, which we will score and rank separately according to the criteria in § 86.60.

(ii) Each project will compete nationally against every other project in Tier Two.

(iii) Tier Two projects must also meet the eligibility requirements in §§ 86.14 and 86.20.

§ 86.54 How must I submit proposals?

(a) You may apply for either Tier One funding or Tier Two funding or both.

(b) You may submit more than one project proposal within Tier One and Tier Two.

(c) You may submit one proposal that includes Tier One and Tier Two projects.

(d) If your proposal includes Tier One and Tier Two projects, you must describe Tier One projects separately from Tier Two projects.

(e) You must describe each project in Tier Two separately, so that the Service can rank and score each project in Tier Two separately.

(f) For the first grant cycle, which includes fiscal years 2000 and 2001, a State may submit one Tier One proposal not to exceed $100,000 per fiscal year. States should submit proposals between February 20, 2001, and May 18, 2001. We will fund one Tier One proposal per State for each fiscal year provided that each proposal meets the eligibility requirements in §§ 86.14 and 86.20. Fiscal year 2000 funds are available only for Tier One proposals. Tier One proposals need not meet the criteria in § 86.60. We will fund Tier Two proposals received between February 20, 2001, and May 18, 2001, that meet the criteria in §§ 86.14, 86.20, and 86.60 with fiscal year 2001 funds and the remainder of fiscal year 2000 funds.

(g) For the remaining grant cycles, you may submit only one proposal of Tier One projects per fiscal year.

(h) When we approve projects, the appropriate Service Regional Office will determine how many grant agreements are necessary.

§ 86.55 What are my compliance requirements with Federal laws, regulations, and policies?

(a) To receive Federal funds, you must agree to and certify compliance with all applicable Federal laws, regulations, and policies. You must submit an Assurance Statement, as described in 43 CFR part 12.51(c), that describes how you comply with Federal grant requirements; and

(b) You may have to provide additional documentation to comply with environmental and other laws, as defined in Fish and Wildlife Service Manual 523 FW 1 (available on the internet at http://www.fws.gov/directives/523fw1.html). The Service Regional Office Grant Administrator may request preliminary evidence at the grant proposal stage that the proposed project will meet these compliance requirements. Consult with the appropriate Service Regional Office for specific applicability.

Subpart F—How the Service Selects Projects To Receive Grants

§ 86.60 What are the criteria used to select projects for grants?

(a) We will rank all Tier Two proposals according to the criteria in paragraph (b) of this section and the attached chart, which sets forth points we will ascribe for various factors.

(b) We will consider proposals that:

(1) Plan to construct, renovate, and maintain tie-up facilities for transient nontrailerable recreational vessels following priorities identified in your State's program plan (see Subpart M for State program plan information) that the Secretary of the Interior has approved under section 7404(c) of the Sportfishing and Boating Safety Act.	15 points.
(2) Provide for public/private and public/public partnership efforts to develop, renovate, and maintain tie-up facilities. These partners must be other than the Service and lead State agency:	
(i) One partner	5 points.
(ii) Two partners	10 points.
(iii) Three or more partners	15 points.
(3) Use innovative techniques to increase the availability of tie-up facilities for transient nontrailerable recreational vessels (includes education/information).	0–15 points.
(4) Include private, local, or other State funds in addition to the non-Federal match, described in § 86.42:	
(i) Twenty-six percent to thirty-five percent	5 points.
(ii) Between thirty-six and forty-nine percent	10 points.
(iii) Fifty percent and above	15 points.
(5) Are cost efficient. Proposals are cost efficient when the tie-up facility or access site's features add a high value compared with the funds from the proposal, for example, where you construct a small feature such as a transient mooring dock within an existing harbor that adds high value and opportunity to existing features (restrooms, utilities, *etc.*). A proposal that requires installing all of the above features would add less value for the cost.	0–10 points.
(6) Provide a significant link to prominent destination way points such as those near metropolitan population centers, cultural or natural areas, or that provide safe harbors from storms.	10 points.
(7) Provide access to recreational, historic, cultural, natural, or scenic opportunities of national, regional, or local significance. Projects that provide access to opportunities of national, regional, or local significance receive 5 points for each, for a maximum of 15 points	
(8) Provide significant positive economic impacts to a community. For example, a project that costs $100,000 and attracts a number of boaters who altogether spend $1 million a year in the community.	1–5 points.
(9) Include multi-State efforts that result in coordinating location of tie-up facilities	5 points.
(10) Total possible points	105 points.

Criteria	Points
(1) Construct Tie-up Facilities	15
(2) Provide Partnership Efforts	5–15
(3) Use Innovative Techniques	0–15
(4) Include Other Funding Sources	5–15
(5) Are Cost Efficient	0–10
(6) Provide Way Point Linkage	10
(7) Provide Access To Opportunities	5–15
(8) Provide Significant Economic Impacts	1–5
(9) Include Multi-State Efforts	5
(10) Total Possible Points	105

§ 86.61 What process does the Service use to select projects for grants?

The Service's Division of Federal Aid convenes a panel of professional staff to review, rank, and recommend funding to the Service Director. This panel will include representatives from the Service's Washington, DC, and Regional Offices. The Director may convene an advisory panel of nongovernmental organizations to advise and make recommendations to the Federal panel. The Service Director will select projects for grants by August 16, 2001, August 10, 2001, and August 10, 2002, for the three grant cycles.

§ 86.62 What must I do after my project has been selected?

After we approve your award, we will notify you to work with the appropriate Service Regional Office to fulfill the grant documentation requirements and finalize the grant agreement.

§ 86.63 May I appeal if my project is not selected?

If you have a difference of opinion over the eligibility of proposed activities or differences arising over the conduct of work, you may appeal to the Director. Final determination rests with the Secretary of the Interior (50 CFR 80.7).

Subpart G—How States Manage Grants

§ 86.70 What are my requirements to acquire, install, operate, and maintain real and personal property?

(a) You will find applicable regulations for this subject in 43 CFR 12.71 and 12.72. If you have questions about applicability, contact the appropriate Service Regional Office.

(b) You must ensure that the design and installation of tie-up facilities provide for substantial structures that will have a significant longevity, at least 20 years.

(c) You must ensure that you operate, maintain, and use the tie-up facilities and features for the stated grant purpose. You must obtain prior written approval from the appropriate Service Regional Director before you can convert these tie-up facilities to other uses.

§ 86.71 How will I be reimbursed?

For details on how we will pay you, refer to 43 CFR 12.61.

§ 86.72 Do any other Federal requirements apply to this program?

For administrative requirements not covered under these specific guidelines, check 43 CFR 12, which generally applies to all Federal grant programs.

§ 86.73 What if I do not spend all the money?

Funds not obligated or expended after 3 fiscal years from the date of the award revert to the Secretary of Transportation for use in State recreational boating safety programs. (16 U.S.C. 777c(b)(3)(B), 16 U.S.C. 777c(b)(4))

§ 86.74 What if I need more money?

Funds for grants are available only on a competitive basis. Therefore, if you need more money, you must compete in the next grant cycle.

Subpart H—Reporting Requirements for the States

§ 86.80 What are my reporting requirements for this grant program?

(a) For all projects, you must submit to the appropriate Service Regional Office an annual report and a final performance report and otherwise comply with 43 CFR 12.80.

(b) For Tier Two projects, you must submit quarterly reports according to 43 CFR 12.80.

§ 86.81 When are the reports due?

Reports are due as follows:

(a) Annual reports are due 90 days after the grant year ends;

(b) The final performance report is due 90 days after the expiration or termination of grant support;

(c) Tier Two quarterly reports are due January 31, April 30, July 31, and October 31 unless specified otherwise in the grant agreement; and

(d) The State must report certified percentage of completion data and other significant developments in accordance

with the grant agreement or 43 CFR 12.80.

§ 86.82 What must be in the reports?

The reports must include the following:

(a) You must identify the actual accomplishments compared to the objectives established for the period;

(b) You must identify the reasons for any slippage if established objectives were not met; and

(c) You must identify any additional pertinent information including, when appropriate, analysis and explanation of cost overruns or high unit costs.

Subpart I—State Use of Signs and Sport Fish Restoration Symbols

§ 86.90 What are my responsibilities for information signs?

You should install appropriate information signs at boating infrastructure tie-up facilities. You should ensure that this information is clearly visible, directing boaters to the facility. Information should show fees, restrictions, hours of operation, a contact name, and telephone number to report an inoperable facility.

§ 86.91 What are my program crediting responsibilities?

You should give public credit to the Federal Aid in Sport Fish Restoration (SFR) program as the source of funding for the BIG Program. You should recognize this program by using the SFR logo. You are encouraged to use the crediting logo identified in § 80.26 of this chapter to identify national BIG Program projects.

§ 86.92 Who can use the SFR logo?

The States may use the SFR logo and should encourage others to display it. Other people or organizations may use the logo for purposes related to the national BIG Program as authorized in § 80.26 of this chapter.

§ 86.93 Where should I use the SFR logo?

You should display the logo on tie-up facilities that you construct, acquire, develop, or maintain under these grants. You should also use the logo on printed material or other visual representations that relate to project accomplishments or education/information. Refer to § 85.47 of this chapter for logo colors.

§ 86.94 What crediting language should I use?

Suggested examples of language to use when crediting the national BIG Program follow:

(a) Example 1: The Federal Aid in Sport Fish Restoration Program funded this facility thanks to your purchase of fishing equipment and motorboat fuels.

(b) Example 2: The Federal Aid in Sport Fish Restoration Program is funding this construction thanks to your purchase of fishing equipment and motorboat fuels. And,

(c) Example 3: The Federal Aid in Sport Fish Restoration Program funded this (pamphlet) thanks to your purchase of fishing equipment and motorboat fuels.

Subpart J—Service Completion of the National Framework

§ 86.100 What is the National Framework?

The National Framework is the survey, required by the Act, you must use to determine boating access needs in your State. Through a State survey, you must conduct a boating access needs assessment or data collection to determine the adequacy, number, location, and quality of tie-up facilities and boat access sites providing access to recreational waters for all sizes of recreational boats.

§ 86.101 What is the Service schedule to adopt the National Framework?

The Secretary of the Interior adopted the National Framework on September 28, 2000 via a notice in the **Federal Register** (Volume 65, Number 189, Page 58284).

§ 86.102 How did the Service design the National Framework?

The Framework divides the survey into two components: boater survey, and boat access provider survey.

(a) The purpose of the boater survey component is to identify boat user preferences and concerns for existing and needed access available to the public.

(1) The nontrailerable boat data set will fulfill informational needs for you to develop your State program plans as called for in the Act.

(2) The boater survey will survey registered boat owners in your State for two types of boats:

(i) Part A—for nontrailerable recreational vessels.

(ii) Part B—for trailerable and ''car-top'' boats (less than 26 feet long).

(b) The purpose of the boat access provider component is to identify boat access providers' ideas about current and needed facility and site locations and perceptions of boat user preferences and concerns regarding access. We developed these questions to guide interviews of boat access facility and site managers.

(1) The nontrailerable boat data set will fulfill the informational needs for you to develop your State plans as called for in the Act.

(2) The boat access provider survey will survey facility providers in your State for two types of boats:

(i) Part C—a survey to all providers in your State who allow public access, including State agency and non-State entities (Federal and local government entities, corporate and private/commercial providers), and operate tie-up facilities for nontrailerable recreational vessels.

(ii) Part D—a survey to all providers in your State who allow public access and operate boat access sites for boats less than 26 feet long.

Subpart K—How States Will Complete Access Needs Surveys

§ 86.110 What does the State survey do?

The State survey determines the status of boating access facilities for all recreational boats in your State and your future boater access needs.

§ 86.111 Must I do a survey?

The Act does not require surveys. They are voluntary. However, if you do a survey, you must complete it following the National Framework to receive funds. You must transmit the results to the Service Regional Offices in a common electronic format, such as Microsoft Word, Word Perfect, Excel or Quattro Pro.

§ 86.112 What are the advantages of doing a survey?

Surveys provide the information necessary to fully understand the needs of boaters in your State. Surveys allow you to develop a meaningful plan to provide better access to boaters. Use surveys to complete the plan.

§ 86.113 What if I have recently completed a boat access survey?

If the recent survey substantially answers the provisions in § 86.118, the appropriate Service Regional Office will determine if it is sufficient to meet the needs of the program. If the Regional Office determines that the survey is not sufficient, you must complete that portion(s) or an entire new survey to receive credit for completing a recent survey.

§ 86.114 Do I need to conduct a survey if I already have a plan for installing tie-up facilities?

You need not conduct the survey if the appropriate Secretary of the Interior certifies that you have developed and are carrying out a State program plan, as described in Subpart M of this chapter, that ensures that public boat access exists and is adequate to meet the needs of recreational boaters on your waters.

§ 86.115 How should I administer the survey?

Use a consultant or university specializing in administration of such surveys. Use sample sizes large enough to achieve statistical accuracy so the estimate is within plus or minus 10 percent of the true number.

(a) You may use a telephone, mail, or other type of survey for a sample population of boaters within the State. Costs for telephone and mail surveys are roughly similar. However, response rates for mail surveys are generally lower.

(b) For boat access providers, we prefer that you survey all State agency and non-State providers, but you may survey a sample population.

(c) You may develop your own methodology to collect data, which may include telephone, mail, fax, or other inventory means. We do not expect you to use automated, electronic, mechanical, or similar means of information collection.

(d) Data collected are unique to each respondent. Data collection should use standard survey method criteria to gather information from each respondent.

§ 86.116 May I change the questions in the survey?

You must not change the questions because we need information that is comparable nationwide. We have developed a survey instrument for completing the surveys. We are seeking approval from OMB on the survey questions and the OMB approval does not extend to additional questions.

§ 86.117 Reserved for survey approval schedule.

§ 86.118 What does this survey instrument include?

(a) We divided this survey into four parts. Part A being for transient nontrailerable boat owners. Part B is for trailerable or ''car-top'' boat owners. Part C is for State agency and non-State providers of facilities for nontrailerable recreational vessels in the State. Part D is for State and non-State providers of access sites for trailerable or ''car-top'' boats.

(b) Follow these instructions to complete Part A—BOAT OWNER SURVEY FOR TIE-UP FACILITIES FOR NONTRAILERABLE RECREATIONAL VESSELS:

(1) If the boater owns a nontrailerable recreational vessel, ask the boater to fill out Part A;

(2) If the boater owns more than one boat 26 feet or more in length, ask the boater to provide information for the boat he or she uses most often;

(3) If the boater owns at least one boat more than and at least one boat less than 26 feet in length, ask the boater to fill out both Parts A and B; and,

(4) You should use a sample size large enough to achieve statistical accuracy so the estimate is within 10 percent of the true number.

(c) Follow these instructions to complete Part B—BOAT OWNER SURVEY FOR TRAILERABLE OR ''CAR-TOP'' BOAT ACCESS SITES:

(1) If the boater owns a boat less than 26 feet long, ask the boater to fill out Part B;

(2) If the boater owns more than one boat less than 26 feet long, ask the boater to provide information for the boat he or she uses most;

(3) If the boater owns at least one boat more than and at least one boat less than 26 feet in length, ask the boater to complete both Parts A and B; and,

(4) You should use a sample size large enough to achieve statistical accuracy so the estimate is within 10 percent of the true number.

(d) Parts C and D are surveys for providers of tie-up facilities and boat access sites. Part C is for State agency and non-State providers of facilities for nontrailerable recreational vessels in the State. Part D is for State and non-State providers of boat access sites for boats less than 26 feet in length.

(e) Follow these instructions to complete Part C—STATE AGENCY AND NON-STATE PROVIDER SURVEY FOR TIE-UP FACILITIES:

(1) Ask State agency and non-State providers of tie-up facilities for nontrailerable recreational vessels to fill out Part C.

(2) If more than one State agency manages these facilities, send this survey to all of those agencies.

(3) If the State agency or non-State provider awards grants to others who provide facilities, ask these grantees to respond for these facilities instead of the State agency or non-State provider.

(4) If a State agency or non-State provider operates facilities and sites for both nontrailerable and trailerable boats, ask the provider to fill out both Parts C and D.

(5) Ask State agency and non-State providers to identify all tie-up facilities.

(6) For all questions, if you need additional space, make copies of the appropriate page.

(f) Follow these instructions to complete Part D—STATE AGENCY AND NON-STATE PROVIDER SURVEY FOR TRAILERABLE BOAT ACCESS SITES:

(1) Ask State agency and non-State providers of access sites for boats less than 26 feet long to fill out Part D.

(2) Non-State providers include the Federal Government, local government, corporations, private owners, and others.

(3) If more than one State agency manages these sites, send this survey to all of them.

(4) If the State agency or non-State provider awards grants to others who provide sites, ask these grantees to respond for these sites instead of the State agency or non-State provider.

(5) If a State agency or non-State provider operates facilities and sites for both nontrailerable and trailerable boats, ask the provider to fill out both Parts C and D.

(6) We prefer that the State agency or non-State provider identify all boat access sites and water-bodies, but if he or she has many sites and water-bodies, the provider may group the information together rather than identify each site individually.

(7) For all questions, if you need additional space, make copies of the appropriate page.

Subpart L—Completing the Comprehensive National Assessment

§ 86.120 What is the Comprehensive National Assessment?

The Comprehensive National Assessment is a national report integrating the results of State boat access needs and facility surveys.

§ 86.121 What does the Comprehensive National Assessment do?

The Comprehensive National Assessment determines nationwide the adequacy, number, location, and quality of public tie-up facilities and boat access sites for all sizes of recreational boats.

§ 86.122 Who completes the Comprehensive National Assessment?

The Service completes the Assessment. We will develop standards in consultation with the States.

§ 86.123 Comprehensive National Assessment schedule.

Using the results from the State surveys, the Service will compile the results and produce the Comprehensive National Assessment by September 30, 2003.

§ 86.124 What are the Comprehensive National Assessment products?

The Comprehensive National Assessment products are:

(a) A single report, including the following information:

(1) A national summary of all the information gathered in the State surveys.

(2) A table of States showing the results of the information gathered.

(3) One-page individual State summaries of the information.

(4) Appendices that include the survey questions, and names, addresses, and telephone numbers of State contacts.

(5) An introduction, background, methodology, results, and findings.

(6) Information on the following:

(i) Boater trends, such as what types of boats they own, where they boat, and how often they boat.

(ii) Boater needs, such as where facilities and sites are now found, where boaters need new facilities and boat access sites, and what changes of features boaters need at these facilities and sites. And

(iii) Condition of facilities.

(b) Summary report abstracting important information from the final national report. And

(c) A key findings fact sheet suitable for widespread distribution.

Subpart M—How States Will Complete the State Program Plans

§ 86.130 What does the State program plan do?

The State program plan identifies the construction, renovation, and maintenance of tie-up facilities needed to meet nontrailerable recreational vessel user needs in the State.

§ 86.131 Must I do a plan?

The Act does not require plans. Plans are voluntary. However, if you do a plan, you must complete it following these regulations.

§ 86.132 What are the advantages to doing a plan?

Plans provide the information necessary to fully understand the needs of boaters operating nontrailerable recreational vessels in your State. The plan will make you more competitive when you submit grants under this program. We will give you 15 points for having an approved plan.

§ 86.133 What are the plan standards?

You must base State program plans on a recent, completed survey following the National Framework.

§ 86.134 What if I am already carrying out a plan?

You need not develop a program plan if we certify that you have developed and are carrying out a plan that ensures public boat access is and will be adequate to meet the needs of recreational boaters on your waters.

§ 86.135 Reserved for plan approval schedule.

§ 86.136 What must be in the plan?

The plan must:

(a) Identify current boat use and patterns of use.

(b) Identify current tie-up facilities and features open to the public and their condition.

(c) Identify boat access user needs and preferences and their desired locations. Include repair, replacement, and expansion needs and new tie-up facilities and features needed.

(d) Identify factors that inhibit boating in specific areas, such as lack of facilities, or conditions attached that inhibit full use of facilities. Identify strategies to overcome these problems.

(e) Include information about the longevity of current tie-up facilities.

§ 86.137 What variables should I consider?

You should consider the following variables:

(a) Location of population centers,

(b) Boat-based recreation demand,

(c) Cost of development,

(d) Local support and commitment to maintenance,

(e) Water-body size,

(f) Nature of the fishery and other resources,

(g) Geographic distribution of existing tie-up facilities,

(h) How to balance the need for new tie-up facilities with the cost to maintain and improve existing facilities.

Dated: December 8, 2000.

Kenneth L. Smith,

Acting Assistant Secretary for Fish and Wildlife and Parks.

[FR Doc. 01–951 Filed 1–17–01; 8:45 am]

BILLING CODE 4310–55–P

Federal Register

Thursday,
January 18, 2001

Part VIII

Department of Health and Human Services

Administration for Children and Families

45 CFR Part 1310
Head Start Program; Final Rule

DEPARTMENT OF HEALTH AND HUMAN SERVICES

Administration for Children and Families

45 CFR Part 1310

RIN 0970–AB24

Head Start Program

AGENCY: Administration on Children, Youth and Families (ACYF), Administration for Children and Families (ACF), DHHS.

ACTION: Final rule.

SUMMARY: This final rule implements the statutory provision for establishing requirements for the safety features and the safe operation of vehicles used by Head Start agencies to transport children participating in Head Start programs.

DATES: 45 CFR 1310.11 and 1310.15(c) are effective January 20, 2004. 45 CFR 1310.12(a) and 1310.22(a) are effective January 18, 2006. 45 CFR 1310.2(c) and 1310.12(b) are effective February 20, 2001. The other provisions of this part are effective January 18, 2002.

FOR FURTHER INFORMATION CONTACT: Douglas Klafehn, Deputy Associate Commissioner, Head Start Bureau, Administration for Children, Youth and Families, P.O. Box 1182, Washington, DC 20013; (202) 205–8572.

SUPPLEMENTARY INFORMATION:

I. Program Purpose
II. Background and Purpose of Rule
III. Summary of Major Provisions of the Rule
IV. Rulemaking History
V. Section-by-Section Discussion of Comments
VI. Impact Analysis
VII. List of Subjects in 45 CFR Part 1310 Final Rule

SUPPLEMENTARY INFORMATION

I. Program Purpose

Head Start is authorized under the Head Start Act (the Act), Title VI, Subtitle A, Chapter 8 of the Public Law 97–35, the Omnibus Reconciliation Act of 1981 (42 U.S.C. 9801 *et seq.*). It is a national program providing comprehensive child development services primarily to low-income children, predominantly age three to the age of compulsory school attendance, and their families. To help enrolled children achieve their full potential, Head Start programs provide comprehensive health, nutritional, educational, social and other services.

Additionally, section 645A, of the Head Start Act provides authority to fund programs for families with infants and toddlers. Programs receiving funds under the authority of this section are referred to as Early Head Start programs. Programs are required to provide for the direct participation of the parents of enrolled children in the development, conduct, and direction of local programs. Parents also receive training and education to foster their understanding of and involvement in the development of their children.

While Head Start is intended to serve primarily children whose families have incomes at or below the poverty line, or who receive public assistance, Head Start regulations permit up to 10 percent of the children in local programs to be from families who do not meet these low-income criteria. The Act also requires that a minimum of 10 percent of the enrollment opportunities in each program be made available to children with disabilities. Such children are expected to participate in the full range of Head Start services and activities with their non-disabled peers and to receive needed special educational and related services.

The Head Start Improvement Act of 1992 contained a provision that requires the Head Start Bureau to develop regulations for the safe transportation of Head Start children. In addition, the Final Report of the Advisory Committee on Head Start Quality and Expansion included in its recommendations the development of ''* * * regulations to assure that safe and effective transportation services are available.'' Finally, In July 1999 the National Transportation Safety Board (NTSB) sent a letter to the Department of Health Human Services reporting findings from the investigation of four accidents in which children being transported in non-conforming vans were killed. One of the fatalities was a Head Start child. The NTSB issued clear recommendations to Head Start based on its findings. The NTSB's letter stated that ''when States allow children to be transported in vehicles not meeting Federal school bus construction standards, NHTSA's intent of protecting school children is undermined * * *. The Safety Board is firmly convinced that the best way to maximize pupil transportation safety is to require the use of school buses or buses built to equivalent occupant crash protection standards.'' The NTSB commented that the release of the Head Start Transportation ''* * * rulemaking should be expedited to prevent future injuries and fatalities to children enrolled in Head Start programs''. The specific recommendations included that ''Head Start children be transported in vehicles built to Federal school bus structural standards or the equivalent'' and that guidelines provided by the National Highway Traffic Safety Administration's Guideline for the Safe Transportation of Preschool Age Children in School Buses be mandated in the rule. The guidelines are related to child passenger restraint systems. The development of ''Performance Standards'' for Head Start transportation supports the goal of ensuring that children and families receive high quality Head Start services.

II. Background and Purpose of the Rule

The authority for this final rule is found in sections 640(i) and 644(a) and (c) and 645A(b)(9) of the Head Start Act (42 U.S.C. 9801 *et seq.*). Section 640(i) directs the Secretary to issue regulations establishing requirements for the safety features and the safe operation of vehicles used to transport children participating in Head Start programs. Section 645A(b)(9) requires that Early Head Start agencies comply with requirements established by the Secretary concerning design and operation of such programs. Sections 644(a) and (c) require the issuance of regulations setting standards for organization, management, and administration of Head Start programs.

Since the inception of the program, most Head Start agencies have routinely provided transportation for some Head Start children to and from the classroom when needed, although there has never been a requirement to do so. To date, information on transportation provided to Head Start programs has been limited to a series of Information Memoranda which provide guidance to programs on issues around transportation safety, but which do not require any action on the part of Head Start agencies. The following is a summary of that information:

ACYF–IM–82–01, ''Bus Safety,'' issued on January 19, 1982. This Information Memorandum addresses the applicability of The National Highway Traffic Safety Administration's (NHTSA) Federal Motor Vehicle Safety Standards (45 CFR Part 571) to school buses with a seating capacity of eleven (11) or more. The Administration for Children, Youth and Families suggested that all buses purchased or leased to transport Head Start children meet the NHTSA standards.

ACYF–IM–83–06, ''Transportation Safety,'' issued March 24, 1983. This Information Memorandum provided notification to Head Start programs of a Highway Accident Report prepared by the National Transportation Safety Board (NTSB) on an accident involving a Head Start vehicle. As a result of their

investigation, the NTSB recommended that ACYF advise all Head Start programs of the circumstances of the accident in hopes that the report would draw attention to the importance of transportation safety. The Information Memorandum also notified programs of the NTSB's recommendation that ACYF adopt, and emphasize the need for adherence to, the policies and guidelines provided by the National Highway Traffic Safety Administration's (NHTSA) Pupil Transportation Safety Standards, Highway Safety Program Standard Number 17 (now Guideline 17). A copy of Standard 17 was included and programs were ''urged'' to use the Standard to assess the adequacy of their transportation systems.

ACYF–IM–93–10. ''Transportation,'' issued on March 18, 1993. This Information Memorandum replaced ACYF–IM–82–01 and ACYF–IM–83–06, since both the Federal Motor Vehicle Safety Standards (FMVSS) and NHTSA's Pupil Transportation Safety Standards had been revised. The Information Memorandum provided Head Start programs with a copy of the new Guideline 17 and again encouraged programs to purchase only vehicles that meet the FMVSS for school buses. The Information Memorandum also provided Head Start programs with new information regarding the Federal Highway Administration's (FHWA) Commercial Motor Vehicle Safety Act and the Commercial Driver's License (CDL) program.

As these issuances have been advisory and not legally binding, there have been differing degrees of implementation. Not all Head Start agencies offer transportation services and, among the agencies that do provide transportation, there are varying degrees of quality and safety.

Because of the impact on the overall quality of services provided to children and families and to assure them access to services, we strongly believe that transportation services in Head Start must meet safety and quality regulations. Many low income families who enroll children in Head Start have limited, if any, access to regular transportation. They often do not own, or cannot afford to operate, a vehicle. They frequently are geographically isolated from, or unable to afford, public transportation. Some communities do not provide any public transportation. Head Start transportation services may be required to ensure the enrollment and attendance of the highest need children.

When Head Start children are transported to and from the program, it is important that the time spent in transit be safe and support Head Start learning experiences. In a typical rural Head Start program some children are transported over long distances and spend a significant part of their day en route to and from the classroom. Therefore, the time children spend on the vehicle should be treated with the same level of importance as the time the children spend in the classroom and in other program activities.

We know from experience and documentation that significant variation exists among States in terms of whether or not drivers and vehicles that transport Head Start children are included under the purview of State school bus requirements.

In developing this rule, the Head Start Bureau commissioned a survey of the States to determine whether and the extent to which, the requirements in the State's pupil transportation safety plan applied to Head Start programs. Of the 48 States that responded to the survey, 14 of them stated that their Head Start programs are covered by the State regulations governing pupil transportation, 23 States responded that their Head Start programs are not covered, 10 States gave a conditional response and one (1) State did not know. The survey also indicated significant variation among the States in the amount of training required for school bus drivers. Of the 45 States that responded to this question, 39 have some mandated training requirements for school bus drivers, three States reported that driver training was handled at the local level, and three States reported no mandated training requirements for school bus drivers. More significantly, only 13 States reported mandated driver training for Head Start bus drivers.

This variation, both in the way Head Start programs are viewed by the States as well as differing requirements among the States, limits reliance on the States as the sole source of transportation safety standards for Head Start programs.

Variation among the States in regulation of Head Start transportation services and oversight, was one of the primary determinants of our decision to develop minimum standards for all Head Start programs, regardless of the State or jurisdiction in which they operate.

We have substantially revised the proposed rule by providing that within five years of the date of publication of these regulations, Head Start agencies must use for activities defined as ''transportation services'', either a school bus or an ''Allowable Alternate Vehicle.'' These two classes of vehicles are defined in the regulations under section 1310.3. The term ''Allowable Alternate Vehicle'' is used to describe a vehicle which complies with the FMVSS applicable to school buses related to crash survivability and mirrors, but does not meet the other FMVSS which apply to crash prevention, such as the requirements for flashing school bus lights and stop arms, or the provisions in Guideline 17 relating to the color of the vehicle and the use of lights and stop arms. All other parts of the regulation, with the exception of Section 1310.11 and Section 1310.15(a) which are effective three years from the date of publication and Sections 1310.2(c) and 1310.12(b) which are effective 30 days from the date of publication, are effective one year from the date of publication.

The provisions that are effective in one year are important to child passenger safety and pose less burden to grantees than the vehicle, safety restraint, and monitor provisions. The Notice of Proposed Rulemaking included a three year phase-in period for all of the provisions with the exception of driver training. The NPRM invited comments about the feasibility of the three year period. The implementation periods that were selected for each provision resulted from review of the comments and analysis of current Head Start requirements. To improve transportation safety as quickly as possible where it was reasonable the implementation period was changed to one year.

The additional category of vehicle was added to address two significant issues raised during the NPRM comment period. The first issue related to the fact that some States prohibit Head Start and other community based programs from using school buses. The second issue related to concerns raised by Community Transportation Agencies (CTAs) about their ability to continue serving Head Start programs if all Head Start agencies providing transportation services were required to use only school buses. Some CTAs operate vehicles which serve both Head Start grantees and other community organizations, and believe that using only school buses to provide transportation for Head Start programs would interfere with their ability to use the same vehicles to meet the needs of other segments of the community. Other groups, such as senior citizens, might object to the use of school buses to meet their needs, and it would be prohibitively expensive for the CTAs to have separate vehicles to meet the needs of Head Start programs and those of

other groups. Reconciling the opposing issues related to vehicle structural safety took several years of painstaking work. Significant progress was accomplished through the contributions of the Joint Department of Health and Human Services and Department of Transportation Coordinating Council on Human Services Transportation (now known as the Coordinating Council on Access and Mobility). The development of the allowable alternate vehicle evolved through information exchange, inclusion of multiple perspectives, and willingness to compromise in order to improve the safety of children.

We believe that recognizing an additional class of vehicle without the exterior crash avoidance features is appropriate since those features are not necessary to serving Head Start children. Under Section 1310.20(b)(6), children who must cross the street or highway to board or after exiting the vehicle because curbside drop-off or pick-up is impossible, must be escorted across the street by a bus monitor or other adult. The crash avoidance features are therefore unnecessary to ensure the safety of children being transported to and from Head Start programs.

Formerly, NHTSA interpreted the statutes it is charged with enforcing to prohibit vendors from selling vehicles for use in transporting children enrolled in Head Start programs that do not meet the standards adopted pursuant to those statutes for school buses. The basis for this position was its interpretation of the term ''school'' in the definition of ''schoolbus'' appearing in 49 U.S.C. 30125(a)(1) to include Head Start programs.

At the suggestion of the Head Start Bureau, NHTSA reconsidered its interpretation in light of the new wording added to the Head Start Act by the Coats Human Service Reauthorization Act of 1998, Section 102, Pub. L. 105–285, 112 Stat. 2702, 2703. The statute amended Section 636 of the Head Start Act (42 U.S.C. 9831) to provide that ''[i]t is the purpose of this subchapter to promote *school readiness* by enhancing the social and cognitive development of low-income children through the provision, to low-income children and their families, of health, educational, nutritional, social, and other services that are determined, based on family needs assessments to be necessary.'' (Emphasis added.) In view of the rewording of the statute, NHTSA agreed that it was no longer appropriate to consider the Head Start program to be a school program.

The change in NHTSA's position made it possible for the Head Start program to authorize use of a separate category of vehicle, the ''Allowable Alternate Vehicle'', to transport children enrolled in Head Start programs. The Allowable Alternate Vehicle symbolizes the cooperative approach adopted by the Departments of Transportation and Health and Human Services, over the course of nearly a decade, to solve the complicated problems related to improving the safety of Head Start transportation services.

Vehicles meeting the specifications of Allowable Alternate Vehicles are currently in use in some States that prohibit Head Start programs from using school buses. These vehicles also may be used in States where Head Start is not included under pupil transportation regulations and a program chooses a vehicle with the structural features, but not the appearance, of a school bus. The Head Start Bureau anticipates that manufactures will be able to meet the increased demand for alternate vehicles because school bus manufacturers currently produce such vehicles.

In the development of the rule, we have, with only minor variations, adopted a number of the relevant provisions of Guideline 17 and have referenced several of the Federal Motor Vehicle Safety Standards applicable to school buses. This final rule was developed through ongoing consultation with the National Highway Traffic Safety Administration on the application of the FMVSS and Guideline 17 to Head Start programs.

It should be noted that we do not want to place Head Start agencies in conflict with State requirements. On the contrary, it is our intention to continue to work with the States beyond the implementation of the rule to enhance the relationship between Head Start programs and the State agencies responsible for pupil transportation safety. Toward that end, we consulted with the National Association of State Directors of Pupil Transportation throughout the development of this rule.

Where Guideline 17 lacked specificity or was silent on some aspect that is important for transporting Head Start children, we relied on other resources, such as the National Standards for School Bus Operations, in determining regulatory criteria. For example, the regulation includes requirements for the content of driver training and rules for trip routing. The Transportation Research Board's (TRB) Special Report 222 provided valuable information regarding the use of seat belts on school buses, the need for strict rules for trip routing, and the need to train children in safe riding practices both on and off the bus.

The TRB's examination of the use of seat belts on school buses in Special Report 222, along with NHTSA's recommendation in Guideline 17 that passengers in vehicles with a gross vehicle weight rating of less than 10,000 pounds (which is the class of vehicle most frequently used by Head Start programs) use occupant restraints, raises an issue of special significance to the safe transportation of Head Start children. The use of standard Type I (lap) and Type II (lap and shoulder) seat belts is inappropriate for children who weigh 50 pounds or less, because of the potential for injury from the seat belt itself. Children weighing 50 pounds or less should be seated in child restraint systems designed in accordance with FMVSS No. 213, ''Child Restraint Systems.'' Since almost all Head Start children fall into this lower weight category, we have included such a requirement in the rule. Our decision to include this requirement is based on consultation with organizations such as the American Academy of Pediatrics, the Children's National Medical Center in Washington, DC and the Riley Hospital for Children, Automotive Safety for Children Program in Indianapolis, Indiana. The regulation provides that within three years of its publication, all vehicles must be equipped for use of child restraint systems. In some instances, this may require replacement of existing vehicles. While the regulation allows up to five years to use school buses or allowable alternate vehicles, the full five years will not be available if vehicles are being used that cannot accommodate, or be safely retrofitted to accommodate child restraint systems. We recognize the financial effect that a three year versus a five year implementation period may have for some grantees. We urge grantees to evaluate existing vehicles for capacity to accommodate child restraint systems and plan accordingly. The use of child restraint systems for children weighing 50 pounds or less is critical to their safety.

We have excluded the transportation provided under the Head Start and Early Head Start home-based program option from the requirement for use of school buses or allowable alternate vehicles, and the requirements on driver qualifications and bus monitors. In the home-based option, it may only be necessary to transport parents and children to twice monthly group socializations and other program activities. Usually, the transportation is provided in a vehicle other than a school bus driven by the home visitor, although many programs already use

school buses to transport children enrolled in home-based programs. We anticipate that programs already using school buses will continue the practice. Programs will also need to comply with other requirements of the regulations when transporting children enrolled in home-based programs. We also expect that as more grantees acquire school buses and allowable alternate vehicles for use in transporting children enrolled in other program options, they will make available to children enrolled under the home-based option the same transportation services provided to children enrolled under other program options. We are, however, reluctant at this time to apply the same requirements under the home-based option as other options because local circumstances may at times make it impossible to comply fully with the requirements of the regulations. There may be situations, for example, in rural communities with widely dispersed populations when it will not be possible for a grantee to coordinate its use of vehicles to provide the necessary services using school buses or allowable alternate vehicles to meet the needs of children enrolled in the home-based option as well as those enrolled under the other options that it operates.

It should be noted that the requirements in the regulation which are generally applicable to Head Start, Early Head Start and delegate agencies, such as the requirements for safety education in 45 CFR 1310.21, the requirement for release of a child to a parent, legal guardian, or other individual identified in writing by the parents in 45 CFR 1310.10(g) and the use of appropriate child restraint systems in 45 CFR 1310.11, apply to services under the home-based option.

We recognize that implementing this regulation will require programs to learn its provisions and determine their application in reference to existing State regulations. There are a variety of resources available to support agencies. The Head Start Act requires that an allotment of Head Start and Early Head Start funding be dedicated to training and technical assistance for staff and parents. This is accomplished through a variety of avenues, many of which will be instrumental in supporting grantees as they adopt the provisions of the transportation regulation. The training and technical assistance network consists of local, regional, and national resources. Each region has a Quality Improvement Center (QIC) which supplies the Head Start and Early Head Start programs in its region with a variety of training opportunities that are responsive to program needs and emerging issues. Several of the QIC staff have become experts in transportation issues based on the current needs of grantees they serve. The Head Start Publications Management Center provides the vehicle for distributing information material to all of the Head Start and Early Head Start Grantees and delegate agencies. Materials offered by the Publications Center include the ''Transportation Tool Kit'' which was developed to provide Head Start programs with resources and information related to transportation services. There are also various training opportunities available through each State's Department of Transportation and several national organizations, including the International Center for Injury Prevention and the Community Transit Assistance Program, have volunteered to participate in providing training to Head Start programs. The National Highway Traffic Safety Program offers extensive training resources and has already been involved in providing materials to Head Start programs. The NHTSA document entitled ''Guideline for the Safe Transportation of Pre-school Age Children in School Buses'' was distributed to all grantee and delegate agencies in 1999.

III. Summary of the Major Provisions of the Rule

A summary of the major provisions of the final rule follows. The rule:

- Establishes requirements for transportation services for all Head Start, Early Head Start and delegate agencies that transport children to and from program activities;
- Requires that, beginning five years from the publication of the regulation, vehicles used to provide transportation services to Head Start, Early Head Start, and delegate agency program activities be either ''school buses'' or ''allowable alternate vehicles'' as those terms are defined in the regulation;
- Requires that children receiving Head Start, Early Head Start and delegate agency transportation services be seated in height and weight-appropriate child restraint systems when the vehicle is equipped for use of such devices.
- Describes the minimum qualifications for operators of vehicles that are used to provide transportation services to children enrolled in Head Start, Early Head Start and delegate agency program activities;
- Describes the training requirements for operators of vehicles that are used to provide transportation service to children enrolled in Head Start, Early Head Start and delegate agencies;
- Describes the vehicle and pedestrian safety training requirements for parents and children;
- Describes the requirements for transportation of children with disabilities; and
- Defines the role of Head Start, Early Head Start and delegate agencies in local efforts to plan and implement coordinated transportation systems in order to achieve greater overall cost effectiveness in providing safe transportation.

The contents of this rule include aspects of the following Department of Transportation guidelines and standards:

- Highway Safety Program Guideline No. 17, ''Pupil Transportation Safety,'' referred to in this text as Guideline 17, published in the **Federal Register** (56 FR 19270, April 26, 1991) and (57 FR 56991, December 2, 1992);
- 49 CFR part 571—Federal Motor Vehicle Safety Standards;
- 49 CFR part 383—Commercial Driver's License Standards: Requirements and Penalties; 49 CFR part 391—Qualifications of Drivers;
- 1990 National Standards for School Buses and School Bus Operations, National Safety Council; and
- Special Report 222, ''Improving School Bus Safety,'' Transportation Research Board, National Research Council, 1989.

We also reviewed the National Highway Traffic Safety Administration's ''1999 Guideline for the Safe Transportation of Pre-school Age Children in School Buses.'' This document confirms that, based on conclusive crash testing research results, preschool age children are most safely transported on school buses when seated using weight-appropriate child safety restraint systems.

IV. Rulemaking History

On June 15, 1995, the Department published a Notice of Proposed Rule Making (NPRM) in the **Federal Register** (60 FR 31612), proposing regulations establishing requirements for the safety features and the safe operation of vehicles used by Head Start agencies to transport enrolled children, safety education, and transportation coordination. Copies of the proposed rule were mailed to all Head Start grantee and delegate agencies. Interested individuals were given 60 days in which to comment on the proposed rule. During the 60-day comment period the Department received more than 800 comments from more than 300 respondents. The respondents included Head Start grantees and public and private agencies and individuals

interested in Head Start transportation services.

V. Section-by-Section Discussion of Comments

The comments were analyzed and categorized according to regulatory section and again by nature of comment. Only those sections for which comments were made or to which changes were made are discussed below. The discussion of the sections follows the order of the NPRM table of contents and a notation is made wherever the section designations have been changed or deleted from the final rule.

Subpart A—General

Section 1310.1—Purpose

There were no significant comments submitted in response to this section. Language was added to the final rule to clarify that training in pedestrian safety is an included element of the regulation. Language was also added to the effect that agencies must make reasonable efforts to coordinate resources in order to control costs and improve the quality and availability of transportation services.

Section 1310.2—Applicability

Section 1310.2(a) (re-designated as Section 1310.2(c) in the final rule)

This section described the rule's applicability to all Head Start grantees, Early Head Start grantees and delegate agencies.

Comments. Paragraph (a) in the proposed rule specified the rule's applicability to all Head Start grantees and delegate agencies that provide transportation to children. Several respondents objected on the grounds that a school bus would not be able to safely navigate the challenging terrain encompassed within their program area.

Response. We recognize that there are rare circumstances when programs may use non-traditional forms of transportation (*e.g.,* boats for some island programs) to bring children to and from the program. Waiver authority has been added to the final rule under Section 1310.2(c) so that, on a case-by-case basis, the Department of Health and Human Services official may permit exclusion from one or more requirements of the final rule based on ''good cause''. Good cause will exist only if adherence to a requirement of the Part itself causes a safety hazard in the circumstances faced by the Head Start, Early Head Start or delegate agency. The waiver provision will take effect 30 days after publication of the regulation.

We have excluded home-based program transportation from the vehicle, drive qualification, and bus monitor provisions of the regulation. Home-based Head Start programs may provide transportation to small groups of children and their parents twice per month. Many home-based programs currently use school buses for such transportation and home-based programs are strongly encouraged to use school buses or allowable alternate vehicles whenever possible. When the State in which a Head Start or Early Start program operates sets a higher standard than this regulation, agencies shall comply with the State regulation.

The rule is applicable to all Head Start and Early Head Start grantees and delegate agencies regardless of whether they offer transportation services or not. Some provisions are not applicable if an agency does not provide any transportation services, either directly of through another organization. This includes sub-parts related to vehicles, drivers and trip routing. Other sections are applicable regardless of whether the program provides transportation services or not. Sections which provide requirements for all grantees and delegate agencies include, Section 1310.10(a), (b) and (g), Section 1310.21(a), (c)(2), and (e) and Section 1310.22(c).

Section 1310.3 Definitions

This section supplied definitions for the relevant terms used in the regulation. There were no comments submitted in response to this section of the proposed rule. We have deleted several definitions for terms that were either deleted from the regulation or are self-explanatory and added clarifying language to several others. The term ''Transportation'' is redefined under ''Transportation Services'' in the final rule. We added definitions for the terms ''Agency'', ''Agency Providing Transportation Services'', ''Delegate Agency'', ''Early Head Start Agency'', ''Early Head Start Program'', ''Head Start Agency'', ''Head Start Program'' and ''seat belt cuter'' to clarify the use of these terms in the regulation. We also added a definition of the ''Allowable Alternate Vehicle'' because it is a term used in the final rule. We added a definition for ''school bus'' as the term is used throughout the regulation. Deleted definitions were: ''coordinated transportation'', ''crossing control arm'', ''stop signal arm'', ''driver'', ''winter packs'', ''driver qualifications'', ''Guideline 17'', ''transportation supervisor'', ''training'', ''school bus loading zone'', and ''vehicle''. The remaining terms are listed alphabetically in the final rule.

Subpart B—Transportation Requirements

Section 1310.10 General

Section 1310.10(a) (re-designated in the final rule as Section 1310.10(c))

This section required that programs providing transportation to Head Start children comply with the applicable requirements of this Part.

Comments. The majority of letters were supportive and indicated that adoption of the NPRM would yield safer and higher quality transportation services for children in Head Start. Some other respondents expressed concern that the requirement jeopardizes some transportation services provided for Head Start children by public school districts, regional transit authorities and contractors. Many writers expressed support for the increased safety the regulation affords, but are concerned about the cost of compliance. For example, respondents wrote that the increased costs associated with bus monitors, driver certification and training, child safety restraints, using vehicles that meet the identified safety standards, and providing communication equipment would be prohibitive without additional grant funds. Several also objected that the three-year phase in period was unrealistic with respect to replacement of existing vehicles. Some respondents recommended that waivers be allowable for all or most of the rule's requirements.

Response. The requirements of the regulation are essential in assuring the safe transportation of preschool age children. However, waivers under section 1310.2(c) of the final rule shall be granted on a case-by-case basis where adherence to a specific provision would cause a safety hazard in the circumstances faced by the Head Start, Early Head Start, or delegate agency. Requests for waivers should be made to the responsible official of the Department of Health and Human Services.

In response to comments that three years is not a reasonable period for replacement of existing vehicles in order to comply with the regulations, the effective date of sections 1310.12(a) and 1310.22(a), which now provide that children enrolled in Head Start agencies be transported in either school buses or allowable alternate vehicles, will be five years from the date of publication of this part in the **Federal Register**. This change will provide additional time for

necessary financial planning and upgrading and replacing vehicles.

The requirement which appeared in the NPRM at section 1310.11(i) that children are seated in child safety restraint systems is addressed in the final regulation sections 1310.11 and 13.10.15(a) and (d). Those provisions require that beginning on the date three years from publication in the **Federal Register**, each vehicle used to transport children enrolled in Head Start must be equipped for use of height and weight appropriate child restraint systems which conform to the performance requirements (49 CFR 571.213) for use by children weighing fifty pounds or less who will be transported in the vehicle. This requirement can be met either by retrofitting vehicles already in service or by acquiring new vehicles. For an additional explanation of the reasons for the change in the requirements regarding child safety restraint systems, see the discussion of section 1310.11 in this preamble.

Section 1310.10(b)

Paragraph (b) required that Head Start programs assess and document annually decisions about providing transportation to some, all, or none of the enrolled children.

Comments. Several respondents interpreted the requirement to mean programs are required to transport all children. Others feared they would not be allowed to enroll children they could not transport. Respondents objected to the requirement on the basis that additional transportation requirements are too expensive and they would need to reduce their enrollment to meet the transportation requirements.

Response. The requirement's intent is that programs provide transportation services to the degree possible when the lack of such services would preclude an eligible child from participating in Head Start. It requires programs to consider the most efficient and appropriate service provision. The language in the final rule was clarified to make sure that Head Start agencies assist as many children as possible to obtain transportation, either by providing it directly or through some other means, but are not required to transport every child in the program. We deleted the requirement for specified documentation of Head Start agencies' efforts under this section as unnecessarily burdensome.

Section 1310.10(c) (re-designated as Section 1310.10(a) in the final rule)

The section required Head Start agencies that do not provide transportation to some or all of the enrolled children to provide reasonable assistance to help families arrange transportation for their children to and from the program.

Comments. One respondent expressed concern that an implied liability would exist for a Head Start agency that recommended or arranged child transportation services.

Response. We agree that child safety is a primary concern and that programs must be cautious in assisting families in making alternative transportation arrangements. The regulation requires Head Start agencies to assist as many children as possible who need transportation to attend the program to get that transportation. Parents and guardians are responsible for the safety of children in their care when they bring those children to or from Head Start program activities. When the grantee or delegate agency cannot provide transportation services, possible alternative arrangements may be suggested to parents. This is consistent with Head Start Performance Standard 1304.41(a)(2) which requires grantees and delegates agencies to support collaborations that promote the access of children and families to resources that are responsive to their needs.

Section 1310.10(d) (deleted from the final rule)

Paragraph (d) required each Head Start program providing transportation services to have designated full or part-time transportation supervisor to ensure compliance with the requirements of this Part.

Comments. Some respondents objected that if the transportation services are provided contractually or via a school district, a Head Start employed transportation supervisor is not necessary. The objection most frequently cited was that an additional staff position could not be accommodated through existing grant funds.

Response. The requirement for a designated transportation supervisor reflected recognition of the critical nature of safe transportation services and the time and expertise required to ensure safety. Upon consideration of the comments and given the variety of Head Start staffing patterns, we determined that a separate dedicated staff position may not always be necessary to ensure safe and effective transportation services. The language in the final rule specifies transportation regulation oversight and compliance with he applicable requirements of this part in section 1310.10(c). Head Start agencies providing transportation through another organization or individual must monitor the compliance of the transportation provider with the requirements of this part.

Section 1310.10(e) (re-designated as Section 1310.15(c) in the final rule)

Paragraph (e) required vehicles providing Head Start transportation be staffed with at least one bus monitor in addition to the driver.

Comments. The objections to this paragraph related mainly to the cost of employing bus monitors or the belief that monitors are not necessary for small groups of children. Some respondents indicated that finding volunteer monitors is too difficult. Several writers objected to requiring bus monitors to wear seatbelts as they felt this would negatively impact the monitor's ability to assist children during the ride. Several writers recommended additional monitors for larger groups of children.

Response. The final rule maintains the requirement of at least one bus monitor on vehicles transporting Head Start children. Preschool children require adult supervision and assistance to safely board and exit the vehicle, fasten safety restraints, and to evacuate the vehicle in the event of emergencies. The driver's attentions must be primarily focused on safe operation of the vehicle. The final regulations provide in section 1310.15(d) that, except for bus monitors while they are assisting children, all occupants of the vehicle must be seated and wearing seat belts while the vehicle is in motion. As necessary based on passenger needs, programs may elect to assign more than one monitor to a vehicle. Although the term ''bus monitor'' is being used in the regulations, the requirement in 45 CFR 1310.15(c) applies to all vehicles, except for those used to transport children served under the home-based option, used to provide transportation services after the effective date of the provision.

Section 1310.10(f)

Paragraph (f) required that all accidents involving Head Start vehicles, with or without children on board, must be reported in accordance with State regulations for reporting school bus accidents. There were no specific comments to this section. The language in the final rule was changed to reference ''applicable State requirements'' to improve clarity.

Section 1310.10(g) (re-designated as Section 1310.10(d)(1) in the final rule)

Paragraph (g) required that vehicles transportation Head Start children be equipped with a communication system for use in the event of emergencies. The

NPRM referenced a citizen band radio as an example of a communication system.

Comment. Many writers understood the NPRM to require citizen band radios on vehicles that transport Head Start children and objected on several grounds. Notably, some State police departments have advised against this device fearing it could inform potential criminals of the location of a stranded bus load of children and staff. Most respondents were supportive of equipping vehicles that transport Head Start children with communication capacity.

Response. The final rule continues to require a communication system on vehicles, but defers to grantees to select the most appropriate equipment.

Section 1310.10(h) (deleted from the final rule)

Paragraph (h) required the use of special equipment (*e.g.,* winter packs and air conditioning) as necessary for vehicles transporting Head Start children in extreme climatic conditions.

Comments. Some writers requested a definition ''extreme climatic conditions.'' Others stated that the approporiate outfitting of buses should be a local decision.

Response. It was not our intent that this section be prescriptive. We agreed with the respondents who stated that the appropriate outfitting of vehicles should be a local decision and have deleted the special equipment for climate extremes from the final rule.

Section 1310.10(i) (re-designated as Section 1310.10(g), in the final rule)

Paragraph (i) specified that children must be released only to authorized individuals.

Comments. There were few comments in response to this section of the proposed regulation. Two writers recommended clarifying the section to stipulate that child release procedures be required even if the Head Start program is not directly providing the transportation services. One respondent was concerned that a parent with a disability might be unable get outside to put their child on the vehicle and meet the child at the end of the day.

Response. The language in the final rule contains clarification to reinforce that all providers of Head Start, Early Head Start and delegate agency services, including transportation services, must abide by the child release regulation. The provision allows for a child's parent or legal guardian to designate, in writing, other individuals authorized to pick up the child.

Section 1310.11—Vehicles (re-designated as Sections 1310.12–1310.15 in the final rule)

Section 1310.11(a) (re-designated as Section 1310.12(a) in the final rule)

Paragraph (a) specified that vehicles used to transport Head Start children must comply with the recommendations regarding ''school buses'' as provided in Guideline 17 and prohibited the use of vans in transporting Head Start children.

Comments. This NPRM section elicited the largest number of comments. A number of respondents strongly objected to the prohibition against using vans. While a few writers advocated the use of buses over vans for safety advantages, most stated that programs would not be able to afford to replace vans with school buses and that buses are an inefficient method to transport individual or small groups of children. There were also comments that in some regions of the country, roads are unpaved and require four wheel drive vehicles. Many individuals cited very geographically large service areas as an impediment to reasonably efficient school bus use. One writer cited a State rule permitting the use of qualified vans and drivers if the number of children is fewer than ten and the route would be excessively long if a regular school bus was used.

Response. Substantial effort was devoted to creating a solution that would both improve the safety of vehicles providing Head Start transportation services, not contradict existing State regulations, and be reasonable for use by various transportation providers. The solution provides for the use of either a vehicle that qualifies as a ''school bus'' or an ''Allowable Alternate Vehicle'' which is not a school bus but does meet the structural, or crash protection, standards of a school bus. This decision to require that Head Start transportation service providers only use vehicles with the interior safety features required for school buses reflects the research demonstrating that school buses are safer than other vehicles.

The National Highway Traffic Safety Administration confirms that based on research, ''school buses have been and remain the safest form of highway transportation'' *(School Bus Safety: Safe Passage for America's Children* (1998), p. 5). NHTSA based its conclusion in part on data documenting that the school bus occupant fatality rate of 0.2 fatalities per 100 million vehicle miles traveled (VMT) is much lower than the rates for passenger cars (1.5 per 100 million VMT) or light trucks and vans (1.3 per hundred million VMT). NHTSA established the Federal Motor Vehicle Safety Standards (FMVSS) to make school buses stronger and to provide improved occupant protection (p. 7).

Further evidence of serious safety hazards posed by the use of vans is provided by the National Transportation Safety Board's Highway Special Investigation report titled ''Pupil Transportation In Vehicles Not Meeting Federal School Bus Standards'' (June 1999). The report's findings are based on the investigation of child fatalities in four accidents where children were being transported in vehicles that did not meet the crash protection standards of school buses. One of the accidents involved children being transported to a Head Start program. The report includes detailed analysis of the crashworthiness of the nonconforming vehicles and provides a table describing the crash protection attributes of different vehicle types. Fifteen-passenger vans do not possess the joint strength or roof rollover protection provided by school buses. Federal school bus standards require that body panel joints be strong enough to resist separation during a crash that can cause sharp cutting edges and openings through which children can be ejected. The Safety Board included a comparison of two accidents, one involving a school bus and one involving a fifteen-passenger van. Although the bus was struck by a much larger, heavier truck it suffered far less intrusion damage than the fifteen-passenger van. The Board found that if the children involved in the van accident had been on a bus, they would have had more ''survivable space.'' The report concludes that ''given their better crashworthiness and occupant protection, had school buses or buses providing equivalent occupant crash protection been used in the four accidents * * * the vehicles probably would have suffered less damage and the passengers may have suffered fewer and less severe injuries.''

Based on its report, the National Transportation Safety Board issued a letter to the Department of Health and Human Services (July, 1999) recommending the expedition of the rule requiring that Head Start Children be transported in vehicles built to Federal school bus structural standards or the equivalent and that the guidelines from the National Highway Safety Administration's Guideline for the safe Transportation of Preschool Age Children in School Buses regarding child passenger restraint systems be incorporated in the regulation. Both of the Safety Board's recommendations are reflected in the final rule.

Because all children attending Head Start must be accompanied by an adult if they cross a street or highway to board or exit a vehicle, the final regulation permits the use of an ''Allowable Alternate Vehicle'' which would not be identified as a ''school bus,'' be painted yellow or equipped with flashing lights and a stop arm. The final regulation provides for waiver of one or more of its specific requirements when adherence to a requirement of this part would itself create a safety hazard in the circumstances faced by the Head Start, Early Head Start, or delegate agency, such as when use of a school bus or allowable alternate vehicle is ruled out because of terrain in the area served by the grantee or some other safety factor. In response to the concern about navigating unpaved roads, it should be noted that four wheel drive school buses are currently available.

Section 1310.11(b) (re-designated as Section 1310.12(a) in the final rule)

Section 1310.11(b)(1)(deleted from the final rule)

Paragraph (b)(1) stated that vehicles used for Head Start transportation must comply with all of the Federal Motor Vehicle Safety Standards (FMVSS) for school buses.

Comments. Some respondents objected that Head Start should not be required to use vehicles meeting the FMVSS if Head Start is not included in the State's pupil transportation regulations. Many people asked for additional clarification regarding the definition of allowable exceptions. For example, are medical visits considered incidental and do they require a vehicle complying with the FMVSS for school buses? Cost was again a major topic and several writers suggested a gradual implementation period to reasonably replace existing vehicles with school buses. One writer was concerned that school buses do not include the proper safety restraint systems for young children. Again, several respondents said that school buses cannot navigate rural roadways, which may be unpaved, or very narrow. One comment noted that some States prohibit transit authorities from using school buses and the rule would effectively prevent those agencies from providing Head Start transportation services.

Response. Under section 1310.12(a) the final rule requires that when school buses, as defined in the rule, are used for the planned transportation of Head Start children, they must comply with the FMVSS for school buses, including both crash prevention and crash survivability standards.

In response to the concern that school buses may not be the most practical vehicle to provide transportation in certain circumstances, an alternative acceptable vehicle has been defined in the rule for the purpose of Head Start transportation. The alternative vehicle, called the ''allowable alternate vehicle,'' is defined in these regulations as one which must meet the FMVSS applicable to school buses for crash survivability and mirrors (49 CFR part 571), but is not required by these regulations to meet the standards related to visibility and traffic control. The latter are collectively called crash prevention standards and they include the color of the vehicle, flashing school bus lights, and a stop arm. Crash prevention standards are related to the appearance of vehicles. They include FMVSS 49 CFR 571.108 and 571.131. Requiring the allowable alternate vehicle to meet the crash survivability standards, but not the crash prevention standards, permits greater flexibility in vehicle appearance while maintaining the structural safety features afforded by school buses.

Because Head Start children must be accompanied by an audit when they must cross the street before boarding or after exiting the vehicle, the crash avoidance features are not required for allowable alternate vehicles.

Incidental transportation, which is the unplanned, necessary, transportation of a single child or small group of children for some exceptional purpose, is not required to meet the requirements of the rule relating to transportation services. The distinction between planned and unplanned transportation is designed to allow transportation of children to occur as necessary in unanticipated or exceptional situations. Programs should make every effort to use school buses or allowable alternate vehicles whenever possible. Section 1310.11(b)(1) was deleted in the final rule as it duplicated provisions already specified.

Section 1310.11(b)(2) (re-designated as Section 1310.10(d)(2) and (3) in the final rule)

Proposed paragraph (b)(2) described the requirement that vehicles that transport Head Start children be properly equipped with a fire extinguisher and a first aid kit with location signs for both visibly posted.

Comment. One comment was submitted suggesting most standard first aid kits do not contain adequate supplies for conditions such as shock or severe bleeding.

Response. The final rule maintains the requirement that vehicles transporting Head Start children must be equipped with a fire extinguisher and first aid kit. Seat belt cutters were added to the required safety devices in response to concerns that child safety restraints might slow evacuation of children in an emergency. Grantees are reminded to follow applicable State agency guidelines concerning contents of first aid kit.

Section 1310.11(b)(3) (re-designated under Section 1310.12(a) in the final rule)

Paragraph (b)(3) required that vehicles used to transport Head Start children be equipped with mirrors complying with 49 CFR 571.111.

Comments. There were not comments in response to this section of the proposed regulation.

Response. The specific provision regarding mirrors was deleted as its content is included within the definitions for school buses and allowable alternate vehicles.

Section 1310.11(b)(4) (deleted from the final rule)

Paragraph (b)(4) required that bus steps be equipped with a lower step panel at the primary access point to permit children to step on and off the bus unassisted.

Comments. Several respondents objected to the lower step panel on the grounds that it is too prescriptive and may be unsafe on certain terrain. Further, it was noted that Head Start children vary in size and physical ability and are expected to always have adult assistance when boarding or exiting a Head Start vehicle.

Response. The requirement was deleted from the final rule because we agree with comments that it was more prescriptive than necessary.

Section 1310.11(b)(5) (re-designated as Section 1310.12(a) and (b)(2) in the final rule)

Proposed paragraph (b)(5) stated that vehicles providing Head Start transportation services must be equipped with reverse beepers.

Comments. Writers regarded the reverse beepers as unnecessary because the proposed rule prohibited backing up.

Response. The rule specifies that ''vehicles must not be required to back up * * * [on their routes] except when necessary for reasons of safety or because of physical barriers.'' This requirement reflects that it is not safe for school bus routes to be mapped so that backing up is necessary. A bus, however, may need to back up for reasons of safety or physical barrier. In either instance the reverse beepers notify pedestrians of the driver's

intention and could prevent accidents and injury. Therefore, the provision was retained.

Section 1310.11(b)(6) (provision addressed in Section 1310.22 in the final rule)

Paragraph (b)(6) specified that vehicles that transport Head Start children must be equipped to accommodate children's special needs (*e.g.,* wheelchair lifts).

Comments. Many respondents interpreted the section to mean that every Head Start vehicle must be equipped to meet the potential needs of children with disabilities and were concerned about unnecessary effort and prohibitive expense. Several respondents asked for clarification regarding the definition of ''special equipment'' and the portion of an agency's fleet that should be so equipped.

Response. The language in the final rule, section 1310.22(b), specifies that Head Start agencies must meet the requirements of the Americans with Disabilities Act, section 504 of the Rehabilitation Act of 1973, and the Head Start Performance Standards for Children with Disabilities. It is not necessary, or advisable, that every vehicle transporting Head Start children be equipped with a wheelchair lift. We emphasize that Head Start programs must be prepared to meet the special transportation needs of children with disabilities who enroll in the program. Agencies must consider the needs of children with disabilities when arranging for transportation services using school buses or allowable alternate vehicles. Whenever possible, children with disabilities must be transported along with their peers who do not have disabilities.

Section 1310.11(c) (deleted from the final rule)

Paragraph (c) specified that, to the extent allowable within State requirements, vehicles that transport Head Start children must comply with the following recommendations for identification and equipment of a school bus contained in Guideline 17: (1) Be identified with the words ''School Bus'' printed in letters not less than eight inches high, located between the warning signal lamps as high as possible without impairing visibility of the lettering from both front and rear, and have no other lettering on the front or rear of the vehicle except as required by Federal Motor Vehicle Safety Standards (FMVSS), 49 CFR part 571; (2) be painted National School Bus Glossy Yellow, in accordance with the specification of National Institute of Standards and Technology (NIST) Federal Standard No. 595a, Color 13432, except that the hood should be either that color or lusterless black, matching Nist Federal Standard No. 595a, Color 37038; (3) have bumpers of glossy back, matching NIST Federal Standard 595a, Color 17038, unless, for increased visibility, they are covered with a reflective material; (4) be equipped with a stop signal arm as specified in FMVSS No. 131 (49 CFR 571.131) and a crossing control arm; and (5) be equipped with a system of signal lamps that conforms to the performance requirements of FMVSS No. 108 (49 CFR 571.108).

Comments. No significant comments were received in response to paragraphs (c)(1)–(2). There were, however, a few respondents objecting to the bumper color requirement on the grounds it would require expensive retrofitting of existing vehicles. There were also respondents who objected to paragraphs (c)(4) and (5) which required that vehicles comply with the FMVSS for stop signal arms, crossing control arms, and signal lamps. Several respondents indicated that crossing control arms are unnecessary because Head Start children should only enter or exit buses curbside. There were objections to increased costs for all safety features.

Response. The safety features that would have been required by the proposed Section 1310.11(c)(1)–(5) were deleted from the final regulations because they are not necessary in view of the requirement that children using Head Start vehicles be accompanied by a bus monitor or other adult when they must cross the street before boarding or after exiting the vehicle. The final rule identified the required features for allowable alternate vehicles and school buses under its definitions, Section 1310.3.

Section 1310.11(d) (re-designated as Section 1310.14 in the final rule)

Section 1310.11(d)(1) (re-designated as Section 1310.14 in the final rule)

Paragraph (d)(1) required Head Start agencies to assure that vehicle specifications are correctly provided and that the intended use is identified in bid announcements.

Comments. Respondents requested that bus specifications and purchase procedures be provided by the Head Start Bureau.

Response. Requirements for vehicles to be used in Head Start transportation services are defined in the final rule either explicitly or through reference to other requirements, such as provisions of the FMVSS. Grantees can comply with the requirement to ensure that bid solicitations include correct vehicle specifications by citing or restating the relevant requirements of these regulations, as well as any applicable State requirements. Since the relevant Federal specifications are set forth in the regulations, no changes were made to the final rule.

Section 1310.11(d)(2) (re-designated as Section 1310.14 in the final rule)

Section 1310.11(e) (re-designated as Sections 1310.12(a) and (b) in the final rule)

Paragraph 1310.11(e) specified that existing vehicles not compliant with the FMVSS and the minimum capacity requirement must be replaced within a three-year period. It also reminded readers that, in accordance with 42 U.S.C. 9839(g)(2)(c), Head Start funds may be used for capital expenditures to purchase buses.

Comments. Many respondents objected to the three-year phase in period as far shorter than the useful life of some vehicles. Several individuals suggested periods between five and ten years as more accomplishable and reasonable.

Response. Head Start agencies that are transporting children enrolled in their programs in vehicles which do not meet the requirements under Section 1310.12 should consider replacing those vehicles with compliant vehicles as soon as possible. The allowable limit for vehicle replacement has been extended to five years in order to accommodate the useful life of vehicles that are relatively new at the time the rule is published. Also, the wording of the final regulation has been changed to require that each agency providing transportation services must transport children enrolled in its programs in school buses or allowable alternate vehicles that are equipped for use of height and weight appropriate child restraint systems, and that have reverse beepers. It should be noted that existing vehicles which cannot be equipped to safely accommodate child restraint systems must be replaced within three years of publication of the final rule. We recognize that in a minority of cases this could necessitate vehicle replacement before the full five year period expires or the vehicle's useful like is completely exhausted. This constitutes a reasonable compromise because it will affect relatively few vehicles, three years is an adequate amount of planning time, and restraint systems are essential to child passenger safety. The implementation of child restraint systems should occur as quickly as is reasonably possible.

Paragraph (b) was added to the final rule to clarify that, beginning thirty days after publication of the rule, vehicles purchased with Head Start funds for use transporting children must meet the requirements of paragraph (a).

The language reminding readers that Head Start funds may be used for capital expenditures including buses was deleted as it appears elsewhere (as referenced above) and it is not directly a part of this regulation.

Section 1310.11(f) and (h) (combined and re-designated as Section 1310.15(a) in the final rule)

Paragraph (f) proposed that all passengers on a Head Start vehicle be seated while it is in motion. Paragraph (h) proposed that bus drivers, monitors and other passengers must wear seat belts when the vehicle is in motion.

Comments. Two respondents stated that bus monitors may need to attend to children while the bus is moving and therefore might not be able to remain seated.

Response. While the vehicle is in motion, all children and adults must be wearing appropriate safety restraints. In the event of an emergency while the bus is moving, the monitor may need to unfasten his or her seatbelt and move to assist a child. The language in the final rule was changed slightly to require that, other than a monitor assisting a child, all passengers must remain seated and use appropriate safety restraints while the vehicle is in motion.

Section 1310.11(g) (re-designated as Section 1310.10(e) in the final rule)

Paragraph (g) stated that the use of auxiliary seating was prohibited.

Comments. Several respondents objected to the prohibition against auxiliary seating in wheelchair lift equipped vehicles or adjacent to an emergency door.

Response: The NPRM did to intend to prohibit correctly installed auxiliary seating. The final rule clarifies that all seats must be permanent and pass inspection.

Section 1310.11(i) (re-designated as Section 1310.15(a) in the final rule)

The NPRM indicated that children weighing less than 50 pounds should be seated using child safety restraint seats.

Comments. There were few responses to this item. One respondent objected to the cost and space implications of child safety seats, saying that installing the seats would reduce seating capacity by a third. Another respondent suggested that transportation staff training in the correct use of transportation safety seat use be required in the final rule. A final respondent expressed concern that use of child restraint systems would delay the evacuation of children in an emergency.

Response. Because the National Highway Traffic Safety Administration Guideline for the Safe Transportation of Preschool Children in School Buses concludes that children weighing 50 pounds or less are most safely transported on school buses when they are seated in age- and weight-appropriate restraint systems, this requirement was retained with explicit reference to the 50-pound requirement (National Highway Traffic Safety Administration, 1999). It is expected that programs will make sure transportation staff receive instruction in the correct use of the child restraint system. There are more child restraint systems and more vehicle configurations than were available when the NPRM was published in 1995. The three year implementation period for child safety seats and the five year period for vehicle implementation was designed to provide planning time for grantees with regard to issues such as seat spacing. The final rule requires vehicles transporting Head Start children to be equipped with seat belt cutters which could be used to speed the evacuation of children in an emergency.

Section 1310.11(j) (re-designated as Section 1310.15(b) in the final rule)

Section 1310.11(k) (re-designated as Section 1310.13 in the final rule)

Section 1310.11(k)(1) (re-designated as Section 1310.13(a) in the final rule)

This standard proposed a thorough safety inspection of each vehicle at least annually through a State licensed or operated inspection system.

Comments. One response objected that the requirement is too prescriptive, another suggested it should specifically identify inspection components, a third voiced concern that the rule would conflict with State regulations and a final respondent stated unconditional support.

Response. Regular vehicle inspections are an integral element of safe transportation services. As provided in section 1310.2(a) of the final rule, this provision will apply except when there is an applicable State or local requirement that sets a higher standard.

Section 1310.11(k)(2) (re-designated as Section 1310.13(b) in the final rule)

Section 1310.11(k)(3) (re-designated as Section 1310.13(c) in the final rule)

Section 1310.12—Driver Qualifications (re-designated as Section 1310.16 in the final rule)

Section 1310.12(a) (re-designated as Section 1310.16(a) in the final rule)

Section 1310.12(a)(1) (deleted from the final rule)

Paragraph (a)(1) addressed Head Start transportation service driver qualifications. The proposed requirement was that drivers be at least 21 years of age.

Comments. Several people wrote that they currently use drivers who are eighteen or nineteen years and older as is allowable in their States. Others strongly supported that drivers be at least 21 years old.

Response. The minimum age requirement was removed from the final rule. The final regulation requires that all drivers of vehicles providing Head Start transportation possess Commercial Drivers Licenses and meet physical and other requirements.

Section 1310.12(a)(2) (re-designated as Section 1310.16(a)(1) in the final rule)

Paragraph (a)(2) listed the requirement that drivers providing Head Start transportation possess a Commercial Driver's License (CDL).

Comments. The majority of objections were to the cost implications of having current drivers obtain and meet the ongoing requirements for the CDL. Several respondents were also concerned that the wages paid to Head Start drivers are not competitive with public school bus drivers or commercial truck drivers. One writer objected that the CDL requirement is ''just a way to ensure that all Head Start drivers are drug and alcohol tested.'' A few respondents were concerned about the implications of the CDL requirement for the Home-based program option.

Response. The Commercial Driver's License requirements establish a driver's qualifications to operate the appropriate class of passenger vehicle. The CDL is viewed as the best assurance that drivers will meet essential minimum standards. The final rule retains the CDL requirement in States where such licenses are granted. All operators of commercial motor vehicles are required to have CDLs. Commercial motor vehicles include vehicles designed to carry 16 or more passengers, including the driver. Many States have extended the inclusion to all vehicles used to provide pupil transportation. To

obtain a CDL, vehicle operators must pass written and driving tests in accordance with Federal Standards for the vehicle the person intends to operate. The knowledge test includes such topics as proper procedures for loading and unloading passengers, proper response to emergencies, proper response at railroad crossings and proper braking procedures. The skills test requires applicants to demonstrate basic vehicle control, safe driving, and air brake skills. The topics addressed by the CDL tests are deemed essential for operators of vehicles transporting children. The cost of transportation services may increase as current transportation providers employ drivers with CDLs to meet the requirements of this part. However, many providers already employ CDL drivers as is required by their State. Grantees and delegate agencies will need to assess current practice and make training and budget plans accordingly.

Home-based programs are encouraged to use drivers with CDL's to provide child transportation services, however, home-based programs are excluded from the vehicle type, driver qualification and bus monitor provisions of this regulation. Incidental transportation is not included under the provisions of this Part.

Section 1310.12(a)(3) (re-designated as Section 1310.16(a)(2) in the final rule)

Paragraph (a)(3) proposed that drivers meet physical, mental, moral, and other requirements established by Federal and State regulations, including rules regarding drug and alcohol use.

Comments. The majority of respondents emphasized the importance of drug and alcohol testing. Some objected to the term ''moral requirements'' as too subjective.

Response. We agreed with writers that the word ''moral'' is subject to variable interpretation and it was deleted from the final rule.

Section 1310.12(b) (re-designated as Section 1310.16(b) in the final rule)

Paragraph (b) proposed that each Head Start agency establish its own applicant screening procedure and system for informing applicants of required background checks. Criteria for the rejection of applicants not meeting the requirements would also be established.

Comments. There were two respondents who indicated that their current background check procedures are adequate. Several comments supported the importance of background checks as part of applicant screening.

Response. Driver background checks are an important element of safe transportation services. Some agencies will find that they already meet the requirements of the rule and others will need to establish or improve their systems. This section remains unchanged in the final rule.

Section 1310.12(c) (re-designated as Section 1310.16(b)(1) in the final rule)

Section 1310.12(c)(1) (re-designated under Section 1310.16(b) in the final rule)

Paragraph (c)(1) proposed that applicant screening procedures include an application that provides employment history, educational background, and personal references. There were no significant comments to this section. However, paragraph (c)(1) was removed and the introductory language in (c) edited to include a reference to 45 CFR 1304.52(b)(1), which contains requirements for staff recruitment and selection.

Section 1310.12(c)(2) (re-designated under Section 1310.16(b) in the final rule)

This paragraph required an interview and screening procedure to help establish that an applicant is ''of good moral character'' and does not abuse drugs or alcohol.

Comments. Writers objected to the phrase ''good moral character'' as subjective and ambiguous.

Response. We agree that the term ''good moral character'' is difficult to define and it was deleted from the final rule. The required physical, interviews and background checks will help identify any candidate who fails to meet established employment criteria. In the interest of accuracy and inclusiveness, the term ''State Department of Motor Vehicles'' was changed to the final rule to ''appropriate State agency.''

Section 1310.12(c)(4) (re-designated as Section 1310.16(b)(3) in the final rule.)

This section proposed that drivers have physical examinations.

Comments. Writers were generally supportive of physical examinations for bus drivers.

Response. This provision has been rewritten to require that after a conditional offer of employment and before the applicant begins work as a driver, a medical examination must be performed by a licensed doctor of medicine or osteopathy to establish that the individual possesses the physical ability to perform any job-related functions with any necessary accommodations. The wording of the provision was changed to make the provision consistent with the requirements of the Americans with Disabilities Act.

Section 1310.13—Driver Training (re-designated as Section 1310.17 in the final rule)

Section 1310.13(a) (re-designated as Section 1310.17(a) in the final rule)

Paragraph (a) in the NPRM required that driver training plans include both pre-service and annual in-service training programs.

Comments. There were not comments specifically applicable to paragraph (a). Comments on other sections reflected a need to clarify the requirements in this section.

Response. The provision was re-worded in the final rule to clarify that drivers must receive training prior to operating a vehicle and annually thereafter. The words ''pre-service'' and ''in-service'' were replaced to reflect the growing number of twelve month programs.

Section 1310.13(b)(1) (re-designated as Section 1310.17(b) in the final rule).

The section proposed that drivers transporting Head Start children receive a minimum of 40 hours of skills training prior to providing transportation and outlined specific skill areas.

Comments. This area attracted multiple comments objecting to the 40 hour pre-service requirement on the grounds it is excessive and unreasonable. Others stated that the pre-service training regulation is substantially more than their State requires for public school drivers. Another respondent raised the practical difficulty of providing 40 hours of pre-service training to a driver hired during the program year, rather than at the beginning.

Response. We agree with the respondents who wrote the 40 hours of pre-service training may, in some cases, be more than necessary. Per respondent recommendation, the language in the final rule has been changed to require training topics, rather than hours. Each program will decide on the number of hours necessary to effectively cover the required material. The required content of training remains unchanged and programs are expected to design training plans that will include the required skill areas.

Section 1310.13(b)(1)(i)–(vii) (re-designated as Section 1310.17(b)(1)–(7) in the final rule)

Section 1310.13(b)(2)(i)–(iii) (re-designated as Section 1310.17(b)(2) and (c) in the final rule)

Paragraphs (b)(2)(i)–(iii) specified pre-service training in addition to the previously listed skills training.

Comments. Respondents again objected to the time requirement for pre-service training.

Response. The final rule has been modified to allow the non-skills based training to occur in accordance with the agency's driver training plan. This allows programs to design and deliver training that is effective and efficient in meeting individual program needs.

Section 1310.13(c)(2) (re-designated under Section 1310.17 in the final rule)

Section 1310.13(c)(1) and (2) (deleted from the final rule)

These items proposed eight hours of in-service training annually to maintain and enhance driver skills.

Comments. Respondents were evenly split on whether eight hours would constitute too much or too little in-service driver training.

Response. The final rule specifies content requirements for in-service training and leaves decisions concerning the number of hours of training to individual Head Start agencies. Sections 1310.13(c)(1) and (2) were deleted from the final rule.

Section 1310.13(d) (re-designated as Section 1310.17(e) in the final rule)

Section 1310.13(e) (re-designated as Section 1310.17(f) in the final rule)

Section 1310.13(f) (Re-designated as Section 1310.17(a) in the final rule)

Paragraph (f) stated that drivers of vehicles that transport Head Start children employed on the effective date of this regulation must meet the pre-service training as new drivers within three months of that date.

Comments. There were several comments suggesting that three months is insufficient to provide the required training for existing drivers.

Response. There are two changes in the final rule that address the above concerns and provide time requirement relief. The first is that the rule identifies training topic requirements, but leaves decisions about the amount of training time necessary to the grantee. The second is that the time to train currently employed drivers has been extended from three months from the provisions' effective date to one year and 90 days from that date. This change will allow agencies to use their regularly scheduled staff training to provide the required driver training. Programs are expected to provide the required training to drivers as quickly as possible.

Section 1310.13(g) (re-designated as Section 1310.17(f)(1) in the final rule)

Paragraph (g) specified that Head Start drivers must be evaluated annually by the transportation supervisor and that the evaluation must include an on-board observation of driving performance.

Comments. Respondents requested that the wording be changed from ''transportation supervisor'' to ''supervisor'' to allow local flexibility in performing this function.

Response. While the supervisory functions outlined for transportation services in the NPRM remain, the requirement for a ''transportation supervisor'' has been deleted. We anticipate that most programs directly providing transportation services will employ a full- or part-time person to supervise transportation services. Some programs may elect to assign the supervisory responsibilities to an existing position. Agencies that use another organization or an individual for transportation services will monitor a contract or agreement that requires the contractor to perform driver supervision.

Section 1310.13(h) (re-designated as Section 1310.17(f)(2) in the final rule)

Paragraph (h) proposed that programs should provide the same pre- and in-service training to bus monitors that they provide for drivers.

Comments. Many respondents objected to this requirement on the basis that bus monitors are often volunteers who would not be amenable or available for this training. Some respondents also indicated that it is not necessary that bus monitor training be as rigorous as driver training.

Response. The final rule was changed to state that programs must specifically provide bus monitors with training in the areas of: child boarding and exiting procedures, use of child restraint systems, responding to emergencies, emergency evacuation procedures, use of special equipment, required paperwork, child pick up and release procedures and pre- and post-trip vehicle checks (*e.g.,* ensure that there are no safety hazards and that no child is left on the bus). The burden of the requirement has been eased by eliminating the requirement that monitors receive exactly the same training as drivers. The provisions identifies types of training that monitors must receive to ensure that safety-related topics are included.

Section 1310.20—Trip Routing

Section 1310.20(b)(1)

This paragraph proposed limiting the transit time for a child to or from Head Start to no more than one-hour unless there is express written approval from the Regional Office.

Comments. Several writers stated that the one-hour limit is unrealistic or even impossible in rural areas.

Response. We acknowledge that limiting bus routes to one-hour is problematic in some areas. We wish to stress that children should spend the shortest amount of time possible on the Head Start vehicle given the routing safety parameters outlined in Section 1310.20(a) and the geography of the service area. The language in the final rule has been modified to allow greater flexibility.

Section 1310.20(b)(2)

The NPRM proposed that vehicles transporting Head Start children may not be loaded beyond capacity at any time.

Comments. A few respondents proposed that, because preschool children are ''small,'' three could be seated per bench even though this exceeds the vehicle's posted capacity.

Response. All children receiving Head Start transportation must be seated with a size-appropriate safety restraint in a manufacturer designated seat. The final rule retains the stipulation that at no time may vehicle capacity be exceeded. The wording of the provision has been changed by eliminating the first sentence of the proposed rule to clarify the requirement.

Section 1310.20(b)(3)

The proposed rule stated that vehicles should not be required to back up or perform ''U'' turns during routes.

Comments. Some respondents objected on the grounds that there may be situations (*e.g.,* roads with no outlet) when a three-point or ''U'' turn is required. It as noted that prohibiting ''U'' turns could result in more need for children to cross the street. Finally, a contradiction between the preamble's prohibition of ''U'' turns and this section's use of the term ''should not'' was identified.

Response. The final rule emphasizes that vehicles must not be required to back up on their routes or make ''U'' turns, except when necessary for reasons of safety or because of physical barriers. Every effort to avoid these maneuvers must be made through route planning. Extreme caution must be used

in negotiating ''U'' turns, backing up, or three point turns.

Section 1310.20(b)(4)–(6)

These paragraphs proposed that Head Start vehicle stops should: be located to minimize traffic disruptions and allow the driver a good field of view in front of and behind the vehicle; and minimize the need for children to cross the street to board or leave the vehicle. In addition, the section proposed that if children must cross the street or highway after boarding or exiting the vehicle, they must be escorted across the street by the driver, bus monitor, or another adult, and that under no circumstances may a school bus stop be located in a way that children must cross the street or highway unless the vehicle is equipped to stop traffic as described in the proposed section 1310,.11(c)(1)–(5).

Comments. Respondents strongly objected to a driver leaving the vehicle to accompany a child across the street. It was also noted that some States prohibit flashing red lights in urban areas.

Response. We agree that under no circumstance should a driver leave the vehicle to escort a child across the street and have changed the final rule to so state. The requirement for equipping school buses with flashing red lights and other exterior features proposed in section 1310.11(c)(1)–(5) has been withdrawn from the final regulation. The bus monitor or another adult must accompany every child boarding or exiting the bus. The word ''should'' which appeared in the NPRM was changed to ''must'' to clarify that this is a requirement and not a recommendation.

Section 1310.20(b)(7)

The section proposed establishment of specific procedures in the event alternate routes are required by hazardous weather or other situations.

Comments. Respondents requested clarification of the NPRM phrase ''or other situations which may arise that could affect the safety of the children en route.''

Response. The final rule, while recognizing that every contingency cannot be anticipated, has listed several events that could lead to the need to find a different route. The intent is to assure that there are specific procedures in place in the event unplanned re-routing is required by any situation. Possible hazards, in addition to weather conditions such as ice or water build up, include water or natural gas line breaks, emergency road repair, natural disaster damage caused by earthquake, tornado, or flood, a motor vehicle accident, a building fire, or a crime scene.

Section 1310.21—Safety Education

Section 1310.21(a)

This requirement proposed that Head Start programs should provide pedestrian safety training to caregivers and children who do not receive Head Start transportation.

Comments. All respondents supported this section. It was noted that programs will need to use careful practices to emphasize that preschool age children should not be crossing the street alone. Also, there was a suggestion that the phrase ''as developmentally appropriate'' be included in the section.

Response. We have re-worded the final rule slightly to emphasize that preschool children must not cross the street alone. We have also specified that pedestrian safety teaching must be appropriate for each child's development. Finally, we removed specific content requirements so grantees may design training to meet individual community needs and conditions.

Section 1310.21(b)(1)–(5)

Paragraph (b) identified the safety instruction that Head Start programs would be required to provide to children transported to and from the program.

Comments. Comments were submitted suggesting the safety education be included in the daily lesson plan and that nationally produced videos be supplied for programs to use for safety instruction.

Response. The final rule remains unchanged except that the term ''bus'' is changed to ''vehicle'' to clarify applicability to various transportation possibilities. The rule defines the content safety teaching must include, but leaves the method to the local program.

Section 1310.21(c) (re-designated Section 1310.21(c)(1) in the final rule)

Section 1310.21(e) (re-designated as Section 1310.21(c)(2) in the final rule)

Paragraph (e) proposed that child and caregiver safety training should occur within the first five days of the program year.

Comments. There were many objections that the five-day time limit is unreasonable and, in some cases, impossible.

Response. As suggested by respondents, the final rule was modified to allow that safety instruction must occur within the first thirty days of the program year.

Section 1310.21(f) (re-designated as Section 1310.21(d) in the final rule)

This section proposed that a minimum of two bus evacuation drills per year in addition to the one required under section 1310.21 (b)(5) be required.

Comments. The comments ranged from recommending monthly evacuation drills to suggesting that the drills themselves could pose a safety risk and are unnecessary.

Response. The requirement is consistent with the pupil transportation regulations in many States and, therefore, remains unchanged in the final rule.

Section 1310.21(g) (re-designated as Section 1310.21(e) in the final rule)

Paragraph (g) proposed that teachers should develop daily activities to remind children of the safety procedures.

Comments. Some respondents questioned the need for daily lessons.

Response. The final rule requires staff to make safety reminders an integral, developmental and individualized part of program experiences rather than a discrete, daily, directly instructed lessons. The word ''should'' was replaced by ''must'' because passenger and pedestrian safety awareness are essential elements of safe transportation service. Based on data indicating that most school bus related fatalities occur when a child is in the loading zone, NHTSA states that ''educating children on how to be safe pedestrians is fundamental to school bus safety'' (*School Bus Safety: Safe Passage for America's Children,* p.7)

Section 1310.22—Children With Disabilities

This section of the NPRM specified that transportation services to children with disabilities enrolled in Head Start comply with the Head Start performance Standards on Service for Children with Disabilities.

Comments. There were no significant comments to this section of the regulation. Other sections provoked concerns that the proposed rule would require all vehicles used for Head Start transportation be wheelchair accessible.

Response. Head Start and Early Head Start programs are currently obligated to meet the requirements of the Americans with Disabilities Act, Head Start Performance Standards on Services for Children with Disabilities and Section 504 of the Rehabilitation Act of 1973. Under these regulations they must accommodate the special needs of

children with disabilities. Paragraph (a) of this section in the final rule was amended to clarify that Head Start transportation services must be accessible and that children with disabilities should be transported on vehicles that meet the requirements for school buses or allowable alternate vehicles. Transportation provided under the home-based option is excepted from this provision unless the agency uses school buses or allowable alternate vehicles to transport other children enrolled in the home-based option. This exception has been created because it may not always be possible to ensure that when the agency does not regularly use school buses or allowable alternate vehicles to transport children receiving home-based services that an accessible school bus or allowable alternate vehicle will be available from another source when needed. The rule also specifies that, whenever possible, children with disabilities should be transported on the same vehicles used to transport other children in the program.

Section 1310.23—Coordinated Transportation

Section 1310.23 (a)(1) (re-designated under Section 1310.23(a) and 1310.23(b)(1) in the final rule)

Paragraphs (a) and (a)(1) proposed that Head Start grantees coordinate transportation resources with other human service agencies whenever possible to maximize access and efficiency. Agencies would be required to provide an analysis of the cost of providing transportation directly versus contracting for the service.

Comments. Many respondents cited examples of difficulties obtaining transportation services from other providers. In particular, it was noted that while public schools might like to transport Head Start children, they rarely have space available on their buses. Finally, respondents noted that the vehicles used by other human service agencies would likely not meet Head Start vehicle requirements.

Response. The NPRM was prefaced with the phrase ''whenever possible and to the extent feasible.'' It is understood that the opportunities for coordinated transportation services will vary across communities. The final rule was changed to clarify transportation coordination activities in which Head Start transportation providers will participate whenever possible. The phrase ''coordinate transportation services as follows'' was deleted from the final rule as it is unnecessary.

Section 1310.23(a)(3) (re-designated as § 1310.23(b)(3) in the final rule)

The NPRM stated that where no coordinated transportation system exists in a community, the Head Start grantee should make every effort to provide the impetus for the formation of a transportation coordinating council.

Comments. Respondents suggested that the language needs to more strongly emphasize recognition that, with the exception of the local education agency (LEA), Head Start may be the only transportation service provider operating in some communities.

Response. The phrases ''make every effort'' and ''where feasible'' in the NPRM were intended to reflect responsiveness to individual community needs. The requirement in the final rule specifies that when there is no coordinated transportation system, Head Start agencies will identify any other agencies providing transportation and support the establishment of a local transportation coordinating council where reasonable.

Section 1310.23(a)(4) (deleted from the final rule)

This item specified that records be maintained to document compliance with the coordination requirements.

Comments. Respondents objected to keeping additional records.

Response. We agree with the respondents that this paragraph posed an unnecessary burden and have deleted it from the final rule. However, programs are expected to support the continuity and efficiency of community transportation whenever possible.

VI. Impact Analysis

Executive Order 12866

Executive Order 12866 requires that regulations be drafted to ensure that they are consistent with the priorities and principles set forth in this Executive Order. The Department has determined that this rule is consistent with these priorities and principles. This final rule implements the statutory authority to promulgate regulations for the safe transportation of Head Start children.

Congress made no additional appropriation to fund this new authority, however, and so any money spent toward the purchase of vehicles, additional personnel, training or other purposes related to this regulation is money that would have been spent otherwise by the program or other programs from the same appropriation amount. We believe that we have focused these rules in ways that encourage maximum cost-effectiveness in transportation spending decisions.

Executive Order 13132

Executive Order 13132 on Federalism applies to policies that have federalism implications, defined as ''regulations, legislative comments or proposed legislation, and other policy statements or actions that have substantial direct effects on the States, on the relationship between the national government and the States, or on the distribution of power and responsibilities among the various levels of government.'' This rule does not have federalism impacts as defined in the Executive Order.

The Head Start Bureau surveyed the States to determine the applicability of State pupil transportation regulations to the Head Start program and learn about each States pupil transportation system. The Bureau also consulted extensively with Head Start programs and the Department of Transportation in the development of the regulation.

Family Well-Being Impact

As required by Section 654 of the Treasury and General Government Appropriation Act of 1999, we have assessed the impact of this final rule on family well-being. This rule will improve the safety of preschool children being transported to and from Head Start programs and promote pedestrian and passenger safety training to adults and children.

Regulatory Flexibility Act of 1980

The Regulatory Flexibility Act (5 U.S.C. 601 *et seq.*) requires the Federal government to anticipate and reduce the impact of rules and paperwork requirements on small businesses. For each rule with a ''significant economic impact on a substantial number of small entities'' an analysis must be prepared describing the rule's impact on small entities. Small entities are defined by the Act to include small businesses, small non-profit organizations and small governmental entities. These regulations would affect small entities. However, it should be noted that many Head Start agencies already provide transportation services in accordance with State and local requirements. Furthermore, the increased costs associated with implementing this regulation's provisions are small and well within grantees' capacity to manage. The total estimate of $18.9 million, less than one-third of one-percent of Head Start's annual budget, is comprised of three requirements. These are: $4.8 million to employ additional bus monitors for those relatively few programs currently operating vehicles without monitors;

$10 million to recruit and retain qualified bus drivers with Commercial Driver's Licenses for programs currently using drivers without the credential; and $4.1 million to purchase child safety restraint systems. ACF acknowledges that compliant vehicles can, in some cases, be more costly than non-compliant vehicles. However, these additional costs are generally offset by the fact that compliant vehicles may last longer, accommodate more children, and incur lower insurance costs than non-compliant vehicles.

Currently, approximately 75 percent of all programs offer transportation services to some or all of their enrolled children and about 53 percent of all Head Start enrolled children receive transportation services. It is not anticipated that the implementation of the rule will cause any significant change in the numbers of children being transported.

We believe that meeting the requirements of this regulation is feasible and will not impose excessive burden because we are providing a five-year phase-in period for compliance with vehicle requirements, a three-year compliance period for child safety restraint systems, and a twelve-month compliance period for other provisions of the rule. The five-year implementation period was adopted in response to comments elicited by the NPRM indicating that the useful life of a vehicle may be longer than the three years proposed in the NPRM. Therefore, the potential financial burden posed by the regulation will be significantly offset by avoiding the premature replacement of vehicles. The five-year period is further supported by the fact that 20–30 percent of the vehicles operated by Head Start are replaced each year. The rule offers ample margins to absorb the useful life of most existing vehicles. The financial burden on Head Start agencies that acquire vehicles meeting the standards in these regulations is further eased by a provision in the Head Start Act which authorizes the Secretary to allow Head Start grantees to use grant funds to pay the cost of amortizing the principal and the interest on loans to finance the purchase of vehicles (42 U.S.C. 9839(g)(2)(C)). Finally, grantees have been instructed for several years to purchase only conforming vehicles with Federal funds, so the majority of vehicles in the existing fleet are school buses or qualify as allowable alternate vehicles. For the reasons outlined above, no additional costs are anticipated related to vehicle replacement.

The potential burden imposed by the transportation regulation's requirement for bus monitors is lessened by the fact that Head Start agencies that directly operate transportation services already employ more than 7,500 bus monitors. Many other organizations providing transportation services to children enrolled in Head Start also currently, either voluntarily or in response to State or local regulation, staff vehicles providing transportation to Head Start and Early Head Start agencies with bus monitors in addition to the driver. This part of the regulation has a three-year implementation period to ease the impact by providing planning time for transportation providers not currently employing or using volunteer bus monitors. In addition, many bus monitors fulfill dual roles, such as kitchen aide or teacher aide and bus monitor. This may be financially advantageous to both the employee and the employer and represents a mechanism to further reduce the impact of the provisions.

The regulation specifies that agencies must offer transportation assistance to families when transportation services are not provided through the Head Start program. This requirement is consistent with section 1304.41(a)(2) which directs grantee and delegate agencies to ''promote the access of children and families to community services that are responsive to their needs * * *'' Because such assistance is an integral element of the ongoing work of grantees and delegate agencies, the provision poses no additional burden.

The decision to require two-way communication capacity on vehicles was carefully weighed in consideration of both its contributions to improved safety and increased cost. Many vehicles that transport children are now supplied with two-way communication devices. While the requirement represents an expense for some operators, the flexibility regarding type of equipment and the steadily decreasing cost for communication equipment suggest a minimal financial burden.

Head Start and Early Head Start grantees and delegate agencies that currently rely on drivers who do not possess Commercial Drivers Licenses (CDLs) may find an increased cost associated with recruiting and retaining drivers with that license or retaining transportation services from another organization that supplies drivers with CDLs. However, in 1993, the Administration for Children and Families issued an Information Memorandum (ACYF–IM–9310) advising Head Start grantees and delegate agencies of the requirement that any vehicle designed to carry 16 or more passengers must be operated by a driver with a CDL. Many drivers providing Head Start transportation services currently possess CDLs and there is not an anticipated increase in the overall number of drivers, therefore; the burden of the provision is diminished.

Substantial attention was dedicated to assessing alternative methods for improving transportation safety through channels other than the provisions of this regulation. Extensive research, the strongly worded recommendations of the National Transportation Safety Board and Head Start's 35-year history providing transportation services to very young children guided development of each of the regulation's provisions.

For example, some respondents suggested that the adult-to-child ratio while children are being transported should be the same as the one required in Head Start classrooms. That would result in, depending on the children's ages, between one adult for every nine children and one adult for every four children. Another commenter indicated that bus monitors are not necessary at all as the driver can handle vehicle operation and child safety needs without assistance. The decision to require a minimum of one bus monitor per vehicle ensures that children's safety needs will be met, the driver can focus primarily on operating the vehicle, and that the burden is reasonable. One monitor is considered adequate during transportation, but not in the classroom, because children are not mobile while riding the vehicle and the space is contained. The NPRM provisions required the exclusive use of vehicles meeting the Federal standards for a school bus in providing Head Start transportation services. The provision was modified in the final rule to permit the use of an allowable alternate vehicle. The alternate vehicle provides a higher degree of flexibility for transportation providers and is responsive to many of the comments elicited by the NPRM.

We believe that as Head Start agencies become more familiar with these requirements, any additional burden will be rendered less significant through the improved transportation safety for Head Start children. For these reasons, the Secretary certifies that these rules will not have a significant impact on substantial numbers of small entities.

Unfunded Mandates Reform Act

The Unfunded Mandates Reform Act (Pub. L. 104–4) requires agencies to prepare an assessment of anticipated costs and benefits before proposing any rule that may result in an expenditure by State, local, and tribal governments,

in the aggregate, or by the private sector, of $100,000,000 or more in any one year (adjusted annually for inflation). This rule does not impose any mandates on State, local, or tribal governments, or the private sector that will result in an expenditure of $100,000,000 or more in any one year. Resources presently allocated by Head Start programs for transportation services are substantial and may be supplemented as necessary to meet additional requirements posed by the rule over the course of the implementation period.

Congressional Review

This rule is not a major rule as defined in 5 U.S.C., Chapter 8.

Paperwork Reduction Act

Under the Paperwork Reduction Act of 1980, Public Law 96–511, all Departments are required to submit to the Office of Management and Budget (OMB) for review and approval any reporting or record-keeping requirement inherent in a proposed or final rule. This final rule contains no new information collection requirements.

List of Subjects in 45 CFR Part 1310

Head Start, Reporting and recordkeeping requirements, Transportation.

(Catalog of Federal domestic Assistance Program Number 93.600, Project Head Start)

Dated: September 6, 2000.

Olivia A. Golden,

Assistant Secretary for Children and Families.

Approved: October 11, 2000.

Donna E. Shalala,

Secretary.

For the reasons set forth in the Preamble, 45 CFR Chapter XIII is amended by adding Part 1310 as follows:

PART 1310—HEAD START TRANSPORTATION

Subpart A—General

Sec.

1310.1 Purpose.
1310.2 Applicability.
1310.3 Definitions.

Subpart B—Transportation Requirements

1310.10 General.
1310.11 Child Restraint Systems.
1310.12 Required use of School Buses or Allowable Alternate Vehicles.
1310.13 Maintenance of vehicles.
1310.14 Inspection of new vehicles at time of delivery.
1310.15 Operation of vehicles.
1310.16 Driver qualifications.
1310.17 Driver and bus monitor training.

Subpart C—Special Requirements

1310.20 Trip routing.
1310.21 Safety education.
1310.22 Children with disabilities.
1310.23 Coordinated transportation.

Authority: 42 U.S.C. 9801 *et seq.*

Subpart A—General

§ 1310.1 Purpose.

Under the authority of sections 640(i) and 645A(b)(9) of the Head Start Act (42 U.S.C. 9801 *et seq.*), this part prescribes regulations on safety features and the safe operation of vehicles used to transport children participating in Head Start and Early Head Start programs. Under the authority of sections 644(a) and (c) and 645A(b)(9) of the Head Start Act, this part also requires Head Start, Early Head Start, and delegate agencies to provide training in pedestrian safety and to make reasonable efforts to coordinate transportation resources to control costs and to improve the quality and the availability of transportation services.

§ 1310.2 Applicability.

(a) This rule applies to all Head Start and Early Head Start agencies, and their delegate agencies (hereafter, agency or agencies), including those that provide transportation services, with the exceptions provided in this section, regardless of whether such transportation is provided directly on agency owned or leased vehicles or through arrangement with a private or public transportation provider. Transportation services to children served under the home-based Option for Head Start and Early Head Start services are excluded from the requirements of 45 CFR 1310.12, 1310.15(c), and 1310.16. Except when there is an applicable State or local requirement that sets a higher standard on a matter covered by this part, agencies must comply with requirements of this part.

(b) Sections 1310.12(a) and 1310.22(a) of this part are effective January 18, 2006. Sections 1310.11 and 1310.15(c) of this part are effective January 20, 2004. Paragraph (c) of this section and § 1310.12(b) of this part are effective February 20, 2001. All other provisions of this part are effective January 18, 2002.

(c) Effective February 20, 2001 an agency may request a waiver of specific requirements of this part, except for the requirements of this paragraph. Requests for waivers must be made in writing to the responsible Health and Human Services (HHS) official, as part of an agency's annual application for financial assistance or amendment thereto, based on good cause. ''Good cause'' for a waiver will exist when adherence to a requirement of this part would itself create a safety hazard in the circumstances faced by the agency. Under no circumstance will the cost of complying with one or more of the specific requirements of this part constitute good cause. The responsible HHS official is not authorized to waive any requirements of the Federal Motor Vehicle Safety Standards (FMVSS) made applicable to any class of vehicle under 49 CFR part 571. The responsible HHS official shall have the right to require such documentation as the official deems necessary in support of a request for a waiver. Approvals of waiver requests must be in writing, be signed by the responsible HHS official, and be based on good cause.

§ 1310.3 Definitions.

Agency as used in this regulation means a Head Start or Early Head Start or delegate agency unless otherwise designated.

Agency Providing Transportation Services means an agency providing transportation services, either directly or through another arrangement with a private or public transportation provider, to children enrolled in its Head Start or Early Head Start program.

Allowable Alternate Vehicle means a vehicle designed for carrying eleven or more people, including the driver, that meets all the Federal Motor Vehicle Safety Standards applicable to school buses, except 49 CFR 571.108 and 571.131.

Bus monitor means a person with specific responsibilities for assisting the driver in ensuring the safety of the children while they ride, board, or exit the vehicle and for assisting the driver during emergencies.

Child Restraint System means any device designed to restrain, seat, or position children who weigh 50 pounds or less which meets the requirements of Federal Motor Vehicle Safety Standard No. 213, Child Restraint Systems, 49 CFR 571.213.

Commercial Driver's License (CDL) means a license issued by a State or other jurisdiction, in accordance with the standards contained in 49 CFR part 383, to an individual which authorizes the individual to operate a class of commercial motor vehicles.

Delegate Agency means a local public or private not-profit or for-profit agency to which a Head Start or Early Head Start agency has delegated all or part of its responsibility for operation of a Head Start program.

Early Head Start Agency means a public or private non-profit or for-profit agency or delegate agency designated to operate an Early Head Start program

pursuant to Section 645A of the Head Start Act.

Early Head Start Program means a program of services provided by an Early Head Start Agency funded under the Head Start Act.

Federal Motor Vehicle Safety Standards (FMVSS) means the National Highway and Traffic Safety Administration's standards for motor vehicles and motor vehicle equipment (49 CFR part 571) established under section 30111 of Title 49, United States Code.

Fixed route means the established routes to be traveled on a regular basis by vehicles that transport children to and from Head Start or Early Head Start program activities, and which include specifically designated stops where children board or exit the vehicle.

Head Start Agency, means a local public or private non-profit or for-profit agency designated to operate a Head Start program pursuant to Section 641 of the Head Start Act.

Head Start Program means a program of services provided by a Head Start agency or delegate agency and funded under the Head Start Act.

National Driver Register means the National Highway Traffic Safety Administration's automated system for assisting State driver license officials in obtaining information regarding the driving records of individuals who have been denied licenses for cause; had their licenses denied for cause, had their licenses canceled, revoked, or suspended for cause, or have been convicted of certain serious driving offenses.

National Standards for School Buses and School Bus Operations means the recommendations resulting from the Eleventh National Conference on School Transportation, May 1990, published by the National Safety Council, Chicago, Illinois.

Reverse beeper means a device which automatically sounds an intermittent alarm whenever the vehicle is engaged in reverse.

School Bus means a motor vehicle designed for carrying 11 or more persons (including the driver) and which complies with the Federal Motor Vehicle Safety Standards applicable to school buses.

Seat Belt Cutter means a special device that may be used in an emergency to rapidly cut through the seat belts used on vehicles in conjunction with child restraint systems.

State means any of the several States of the United States, the District of Columbia, the Commonwealth of Puerto Rico, any territory or possession of the United States, or any agency or instrumentality of a State exclusive of local governments.

Transportation Services means the planned transporting of children to and from sites where an agency provides services funded under the Head Start Act. Transportation services can involve the pick-up and discharge of children at regularly scheduled times and pre-arranged sites, including trips between children's homes and program settings. The term includes services provided directly by the Head Start and Early Head Start grantee or delegate agency and services which such agencies arrange to be provided by another organization or an individual. Incidental trips, such as transporting a sick child home before the end of the day, or such as might be required to transport small groups of children to and from necessary services, are not included under the term.

Trip routing means the determination of the fixed routes to be traveled on a regular basis for the purpose of transporting children to and from the Head Start or Early Head Start program or activities.

Subpart B—Transportation Requirements

§ 1310.10 General.

(a) Each agency must assist as many families as possible who need transportation in order for their children to attend the program in obtaining that transportation.

(b) When an agency has decided not to provide transportation services, either for all or a portion of the children, it must provide reasonable assistance to the families of such children to arrange transportation to and from its activities. The specific types of assistance being offered must be made clear to all prospective families in the program's recruitment announcements.

(c) Each agency providing transportation services is responsible for compliance with the applicable requirements of this Part. When an agency provides transportation through another organization or an individual, the agency must ensure the compliance of the transportation provider with the requirements of this part.

(d) Each agency providing transportation services, must ensure that each vehicle used in providing such services is equipped with:

(1) a communication system to call for assistance in case of an emergency:

(2) safety equipment for use in an emergency, including a charged fire extinguisher that is properly mounted near the driver's seat and a sign indicating its location;

(3) a first aid kit and a sign indicating the location of such equipment; and

(4) a seat belt cutter for use in an emergency evacuation and a sign indicating its location.

(e) Each agency providing transportation services must ensure that any auxiliary seating, such as temporary or folding jump seats, used in vehicles of any type providing such services are built into the vehicle by the manufacturer as part of its standard design, are maintained in proper working order, and are inspected as part of the annual inspection required under § 1310.13(a) of this subpart.

(f) Each agency providing transportation services must ensure that all accidents involving vehicles that transport children receiving such services are reported in accordance with applicable State requirements.

(g) Each agency must ensure that children are only released to a parent or legal guardian, or other individual identified in writing by the parent or legal guardian. This regulation applies when children are not transported and are picked up from the classroom, as well as when they are dropped off by a vehicle Agencies must maintain lists of the persons, including alternates in case of emergency, and up-to-date child rosters must be maintained at all times to ensure that no child is left behind, either at the classroom or on the vehicle at the end of the route.

§ 1310.11 Child Restraint Systems.

Effective January 20, 2004, each agency providing transportation services must ensure that each vehicle used to transport children receiving such services is equipped for use of height- and weight-appropriate child safety restraint systems.

§ 1310.12 Required use of School Buses or Allowable Alternate Vehicles.

(a) Effective January 18, 2006, each agency providing transportation services must ensure that children enrolled in its program are transported in school buses or allowable alternate vehicles that are equipped for use of height- and weight-appropriate child restraint systems, and that have reverse beepers. As provided in 45 CFR 1310.2(a), this paragraph does not apply to transportation services to children served under the home-based option for Head Start and Early Head Start.

(b) Effective February 20, 2001, each Head Start and Early Head Start agency receiving permission from the responsible HHS official to purchase a vehicle with grant funds for use in

providing transportation services to children in its program or a delegate agency's program must ensure that the funds are used to purchase a vehicle that is either a school bus or an allowable alternate vehicle and is equipped

(1) for use of height- and weight-appropriate child restraint systems; and

(2) with a reverse beeper.

(c) As provided in 45 CFR 1310.2(a), paragraph (b) of this section does not apply to vehicles purchased for use in transporting children served under the home-based option for Head Start and Early Head Start.

§ 1310.13 Maintenance of vehicles.

Each agency providing transportation services must ensure that vehicles used to provide such services are maintained in safe operating condition at all times. The organization operating the vehicle must establish and implement procedures for:

(a) a thorough safety inspection of each vehicle on at least an annual basis through an inspection program licensed or operated by the State;

(b) systematic preventive maintenance on such vehicles; and

(c) daily pre-trip inspection of the vehicles by the driver.

§ 1310.14 Inspection of new vehicles at the time of delivery.

Each agency providing transportation services must ensure that bid announcements for school buses and allowable alternate vehicles for use in transporting children in its program include the correct specifications and a clear statement of the vehicle's intended use. Such agencies must ensure that there is a prescribed procedure for examining such vehicles at the time of delivery to ensure that they are equipped in accordance with the bid specifications and that the manufacturer's certification of compliance with the applicable FMVSS is included with the vehicle.

§ 1310.15 Operation of vehicles.

Each agency providing transportation services, either directly or through an arrangement with another organization or an individual, to children enrolled in its program must ensure that:

(a) On a vehicle equipped for use of such devices, any child weighing 50 pounds or less is seated in a child restraint system appropriate to the height and weight of the child while the vehicle is in motion.

(b) Baggage and other items transported in the passenger compartment are properly stored and secured and the aisles remain clear and the doors and emergency exits remain unobstructed at all times.

(c) Effective January 20, 2004, there is at least one bus monitor on board at all times, with additional bus monitors provided as necessary, such as when needed to accommodate the needs of children with disabilities. As provided in 45 CFR 1310.2(a), this paragraph does not apply to transportation services to children served under the home-based option for Head Start and Early Head Start.

(d) Except for bus monitors who are assisting children, all vehicle occupants must be seated and wearing height- and weight- appropriate safety restraints while the vehicle is in motion.

§ 1310.16 Driver qualifications.

(a) Each agency providing transportation services must ensure that persons who drive vehicles used to provide such services, at a minimum:

(1) in States where such licenses are granted, have a valid Commercial Driver's License (CDL) for vehicles in the same class as the vehicle the driver will operating; and

(2) meet any physical, mental, and other requirements established under applicable law or regulations as necessary to perform job-related functions with any necessary reasonable accommodations.

(b) Each agency providing transportation services must ensure that there is an applicant review process for use in hiring drivers, that applicants for driver positions must be advised of the specific background checks required at the time application is made, and that there are criteria for the rejection of unacceptable applicants. The applicant review procedure must include, at minimum:

(1) all elements specified in 45 CFR 1304.52(b), with additional disclosure by the applicant of all moving traffic violations, regardless of penalty;

(2) a check of the applicant's driving record through the appropriate State agency, including a check of the applicant's record through the National Driver Register, if available in the State; and

(3) after a conditional offer of employment to the applicant and before the applicant begins work as a driver, a medical examination, performed by a licensed doctor of medicine or osteopathy, establishing that the individual possesses the physical ability to perform any job-related functions with any necessary accommodations.

(c) As provided in 45 CFR 1310.2(a), this section does not apply to transportation services to children served under the home-based option for Head Start and Early Head Start.

§ 1310.17 Driver and bus monitor training.

(a) Each agency providing transportation services must ensure that persons employed to drive vehicles used in providing such services will have received the training required under paragraphs (b) and (c) of this section no later than 90 days after the effective date of this section as established by § 1310.2 of this part. The agency must ensure that drivers who are hired to drive vehicles used in providing transportation services after the close of the 90 day period must receive the training required under paragraphs (b) and (c) prior to transporting any child enrolled in the agency's program. The agency must further ensure that at least annually after receiving the training required under paragraphs (b) and (c), all drivers who drive vehicles used to provide such services receive the training required under paragraph (d) of this section.

(b) Drivers must receive a combination of classroom instruction and behind-the-wheel instruction sufficient to enable each driver to:

(1) operate the vehicle in a safe and efficient manner;

(2) safely run a fixed route, including loading and unloading children, stopping at railroad crossings and performing other specialized driving maneuvers;

(3) administer basic first aid in case of injury;

(4) handle emergency situations, including vehicle evacuation procedures;

(5) operate any special equipment, such as wheelchair lifts, assistance devices or special occupant restraints;

(6) conduct routine maintenance and safety checks of the vehicle; and

(7) maintain accurate records as necessary.

(c) Drivers must also receive instruction on the topics listed in 45 CFR 1304.52(k)(1), (2) and (3)(i) and the provisions of the Head Start Program Performance Standards for Children with Disabilities (45 CFR 1308) relating to transportation services for children with disabilities.

(d) Drivers must receive refresher training courses including the topics listed in paragraphs (b) and (c) of this section and any additional necessary training to meet the requirements applicable in the State where the agency operates.

(e) Each agency providing transportation services must ensure that drivers who transport children receiving

the services qualify under the applicable driver training requirements in its State.

(f) Each agency providing transportation services must ensure that:

(1) the annual evaluation of each driver of a vehicle used to provide such services includes an on-board observation of road performance; and

(2) before bus monitors assigned to vehicles used to provide such services begin their duties, they are trained on child boarding and exiting procedure, use of child restraint systems, any required paperwork, responses to emergencies, emergency evacuation procedures, use of special equipment, child pick-up and release procedures and pre- and post-trip vehicle check.

Subpart C—Special Requirements

§ 1310.20 Trip routing.

(a) Each agency providing transportation services must ensure that in planning fixed routes the safety of the children being transported is the primary consideration.

(b) The agency must also ensure that the following basic principles of trip routing are adhered to:

(1) The time a child is in transit to and from the Head Start or Early Head Start program must not exceed one hour unless there is no shorter route available or any alternative shorter route is either unsafe or impractical.

(2) Vehicles must not be loaded beyond the maximum passenger capacity at any time.

(3) Vehicles must not be required to back up or make ''U'' turns, except when necessary for reasons of safety or because of physical barriers.

(4) Stops must be located to minimize traffic disruptions and to afford the driver a good field of view in front of and behind the vehicle.

(5) When possible, stops must be located to eliminate the need for children to cross the street or highway to board or leave the vehicle.

(6) If children must cross the street before boarding or after leaving the vehicle because curbside drop off or pick up is impossible, they must be escorted across the street by the bus monitor or another adult.

(7) Specific procedures must be established for use of alternate routes in the case of hazardous conditions that could affect the safety of the children who are being transported, such as ice or water build up, natural gas line breaks, or emergency road closing. In selecting among alternatives, transportation providers must choose routes that comply as much as possible with the requirements of this section.

§ 1310.21 Safety education.

(a) Each agency must provide training for parents and children in pedestrian safety. The training provided to children must be developmentally appropriate and an integral part of program experiences. The need for an adult to accompany a preschool child while crossing the street must be emphasized in the training provided to parents and children. The required transportation and pedestrian safety education of children and parents, except for the bus evacuation drills required by paragraph (d) of this section, must be provided within the first thirty days of the program year.

(b) Each agency providing transportation services, directly or through another organization or an individual, must ensure that children who receive such services are taught:

(1) safe riding practices;

(2) safety procedures for boarding and leaving the vehicle;

(3) safety procedures in crossing the street to and from the vehicle at stops;

(4) recognition of the danger zones around the vehicle; and

(5) emergency evacuation procedures, including participating in an emergency evacuation drill conducted on the vehicle the child will be riding.

(c) Each agency providing transportation services must provide training for parents that:

(1) emphasizes the importance of escorting their children to the vehicle stop and the importance of reinforcing the training provided to children regarding vehicle safety; and

(2) complements the training provided to their children so that safety practices can be reinforced both in Head Start and at home by the parent.

(d) Each agency providing transportation services must ensure that at least two bus evacuation drills in addition to the one required under paragraph (b)(5) of this section are conducted during the program year.

(e) Each agency providing transportation services must develop activities to remind children of the safety procedures. These activities must be developmentally appropriate, individualized and be an integral part of the Head Start or Early Head Start program activities.

§ 1310.22 Children with disabilities.

(a) Effective January 18, 2006 each agency must ensure that there are school buses or allowable alternate vehicles adapted or designed for transportation of children with disabilities available as necessary to transport such children enrolled in the program. This requirement does not apply to the transportation of children receiving home-based services unless school buses or allowable alternate vehicles are used to transport the other children served under the home-based option by the grantee. Whenever possible, children with disabilities must be transported in the same vehicles used to transport other children enrolled in the Head Start or Early Head Start program.

(b) Each Head Start, Early Head Start and delegate agency must ensure compliance with the Americans with Disabilities Act (42 U.S.C. 12101 *et seq.*), the HHS regulations at 45 CFR part 84, implementing Section 504 of the Rehabilitation Act of 1973 (29 U.S.C. 794), and the Head Start Program Performance Standards on Services for Children with Disabilities (45 CFR part 1308) as they apply to transportation services.

(c) Each agency must specify any special transportation requirements for a child with a disability when preparing the child's Individual Education Plan (IEP) or Individual Family Service Plan (IFSP), and ensure that in all cases special transportation requirements in a child's IEP or IFSP are followed, including:

(1) special pick-up and drop-off requirements;

(2) special seating requirements;

(3) special equipment needs;

(4) any special assistance that may be required; and

(5) any special training for bus drivers and monitors.

§ 1310.23 Coordinated transportation.

(a) Each agency providing transportation services must make reasonable efforts to coordinate transportation resources with other human services agencies in its community in order to control costs and to improve the quality and the availability of transportation services.

(b) At a minimum, the agency must:

(1) identify the true costs of providing transportation in order to knowledgeably compare the costs of providing transportation directly versus contracting for the service;

(2) explore the option of participating in any coordinated public or private transportation systems existing in the community; and

(3) where no coordinated public or private non-profit transportation system exists in the community, make every effort to identify other human services agencies also providing transportation services and, where reasonable, to participate in the establishment of a

local transportation coordinating council.

[FR Doc. 01–1123 Filed 1–17–01; 8:45 am]

BILLING CODE 4184–01–M

Federal Register

Thursday,
January 18, 2001

Part IX

Department of Labor

Occupational Safety and Health Administration

29 CFR Part 1910

Occupational Exposure to Bloodborne Pathogens; Needlesticks and Other Sharps Injuries; Final Rule

DEPARTMENT OF LABOR

Occupational Safety and Health Administration

29 CFR Part 1910

[Docket No. H370A]

RIN 1218–AB85

Occupational Exposure to Bloodborne Pathogens; Needlestick and Other Sharps Injuries; Final Rule

AGENCY: Occupational Safety and Health Administration (OSHA), Department of Labor

ACTION: Final Rule; Request for Comment on the Information Collection (Paperwork) Requirements

SUMMARY: The Occupational Safety and Health Administration is revising the Bloodborne Pathogens standard in conformance with the requirements of the Needlestick Safety and Prevention Act. This Act directs OSHA to revise the Bloodborne Pathogens standard to include new examples in the definition of engineering controls along with two new definitions; to require that Exposure Control Plans reflect how employers implement new developments in control technology; to require employers to solicit input from employees responsible for direct patient care in the identification, evaluation, and selection of engineering and work practice controls; and to require certain employers to establish and maintain a log of percutaneous injuries from contaminated sharps.

DATES: Effective Date: The effective date is April 18, 2001. Written comments: Written comments on the Information Collection Requirements must be submitted on or before March 19, 2001.

ADDRESSES: Copies of materials in the docket may be obtained from the OSHA Docket Office, Room N–2625, U.S. Department of Labor, 200 Constitution Avenue, NW., Washington, DC 20210, Telephone (202) 693–2350. Referenced documents are included in Docket H370A and are identified by the exhibit number indicated.

Submit written comments on the Information Collection Requirements to the Docket Office, Docket No. ICR–0180 (2001), OSHA, U.S. Department of Labor, Room N–2625, 200 Constitution Avenue, NW., Washington, DC 20210; telephone: (202) 693–2350. Commenters may transmit written comments of 10 pages or less in length by facsimile to (202) 693–1648.

In compliance with 28 U.S.C. 2112(a), the Agency designates the Associate Solicitor for Occupational Safety and Health, Office of the Solicitor, Room S–4004, U.S. Department of Labor, 200 Constitution Avenue, NW., Washington, DC 20210, as the recipient of petitions for review of the standard.

FOR FURTHER INFORMATION CONTACT: Bonnie Friedman, Director, OSHA Office of Public Affairs, Room N–3647, U.S. Department of Labor, 200 Constitution Avenue, NW., Washington, DC 20210. Telephone: (202) 693–1999.

SUPPLEMENTARY INFORMATION:

I. Events Leading to the Amended Final Rule

Blood and other potentially infectious materials have long been recognized as a potential threat to the health of employees who are exposed to these materials by percutaneous contact (penetration of the skin). Injuries from contaminated needles and other sharps have been associated with an increased risk of disease from more than 20 infectious agents (Exs. 3–172GG, 3–274C). The primary agents of concern in current occupational settings are the human immunodeficiency virus (HIV), hepatitis B virus (HBV), and hepatitis C virus (HCV).

To reduce the health risk to workers whose duties involve exposure to blood or other potentially infectious materials, OSHA promulgated the Bloodborne Pathogens (BBP) standard (29 CFR 1910.1030) on December 6, 1991 (56 FR 64004). The provisions of the standard were based on the Agency's determination that a combination of engineering and work practice controls, personal protective equipment, training, medical surveillance, hepatitis B vaccination, signs and labels, and other requirements would minimize the risk of disease transmission.

Needlesticks and other percutaneous injuries resulting in exposure to blood or other potentially infectious materials continue to be of concern due to the high frequency of their occurrence and the severity of the health effects associated with exposure. The Centers for Disease Control and Prevention has estimated that healthcare workers in hospital settings sustain 384,325 percutaneous injuries involving contaminated sharps annually (Ex. 5–4). When non-hospital healthcare workers are included, the best estimate of the number of percutaneous injuries involving contaminated sharps is 590,164 per year (Ex. 3–172V). When these injuries involve exposure to infectious agents, the affected workers are at risk of contracting disease. Workers may also suffer from adverse side effects of drugs used for post-exposure prophylaxis and from psychological stress due to the threat of infection following an exposure incident.

Since publication of the BBP standard, a wide variety of medical devices have been developed to reduce the risk of needlesticks and other sharps injuries. These ''safer medical devices'' replace sharps with non-needle devices or incorporate safety features designed to reduce the likelihood of injury. In a September 9, 1998, Request for Information (RFI), OSHA solicited information on occupational exposure to bloodborne pathogens due to percutaneous injury (63 FR 48250). Based in part on the responses to the RFI, the Agency has pursued an approach to minimize the risk of occupational exposure to bloodborne pathogens that involves three components. First, the Agency proposed that the revised Recordkeeping standard (29 CFR 1904) include a requirement that all percutaneous injuries from contaminated needles and other sharps be recorded on OSHA logs (61 FR 4030). Second, OSHA issued a revised compliance directive for the BBP standard on November 5, 1999, to reflect advances made in medical technology and treatment. The directive guides OSHA's compliance officers in enforcing the standard and ensures that consistent inspection procedures are followed. Third, the Agency placed amendment of the bloodborne pathogens standard on its regulatory agenda to more effectively address sharps injuries.

Congress was prompted to take action in response to growing concern over bloodborne pathogen exposures from sharps injuries and in response to recent technological developments that increase employee protection. On November 6, 2000, the Needlestick Safety and Prevention Act was signed into law. The Act directs OSHA to revise the BBP standard in accordance with specific language included in the Act.

II. Statutory Authority

On November 6, 2000, President Clinton signed the Needlestick Safety and Prevention Act, Pub. L. 106–430. The Act requires OSHA to revise the BBP standard within six months of the Act's enactment. To facilitate expeditious completion of this directive, Congress explicitly exempted OSHA from procedural requirements generally attending rulemaking under OSH Act 6(b) and from the procedural requirements of the Administrative Procedure Act (5 U.S.C. 500 *et seq.*).

III. Summary and Explanation

The revisions to OSHA's BBP standard required under the Needlestick Safety and Prevention Act can be broadly categorized into four areas: modification of definitions relating to engineering controls; revision and updating of the Exposure Control Plan; solicitation of employee input; and recordkeeping.

The revised standard adds two additional terms to the definition section found in paragraph (b) and alters the definition of one other term. It adds ''Sharps with Engineered Sharps Injury Protections'' and defines this term as ''a nonneedle sharp or a needle device used for withdrawing body fluids, accessing a vein or artery, or administering medications or other fluids, with a built-in safety feature or mechanism that effectively reduces the risk of an exposure incident.'' This term encompasses a broad array of devices that make injury involving a contaminated sharp less likely, and includes, but is not limited to, syringes with a sliding sheath that shields the attached needle after use; needles that retract into a syringe after use; shielded or retracting catheters used to access the bloodstream for intravenous administration of medication or fluids; and intravenous medication delivery systems that administer medication or fluids through a catheter port or connector site using a needle that is housed in a protective covering.

The revised standard also adds the term ''Needleless Systems,'' which is defined as ''a device that does not use needles for: (A) The collection of bodily fluids or withdrawal of body fluids after initial venous or arterial access is established; (B) the administration of medication or fluids; or (C) any other procedure involving the potential for occupational exposure to bloodborne pathogens due to percutaneous injuries from contaminated sharps.'' ''Needleless Systems'' provide an alternative to needles for the specified procedures, thereby reducing the risk of percutaneous injury involving contaminated sharps. Examples of needleless systems include, but are not limited to, intravenous medication delivery systems that administer medication or fluids through a catheter port or connector site using a blunt cannula or other non-needle connection, and jet injection systems that deliver subcutaneous or intramuscular injections of liquid medication through the skin without use of a needle.

The definition of ''Engineering Controls'' has been modified to include as examples ''safer medical devices, such as sharps with engineered sharps injury protections and needleless systems.'' This change clarifies that safer medical devices are considered to be engineering controls under the standard. The term ''Engineering Controls'' includes all control measures that isolate or remove a hazard from the workplace, encompassing not only sharps with engineered sharps injury protections and needleless systems but also other medical devices designed to reduce the risk of percutaneous exposure to bloodborne pathogens. Examples include blunt suture needles and plastic or mylar-wrapped glass capillary tubes, as well as controls that are not medical devices, such as sharps disposal containers and biosafety cabinets.

The expanded definitions reflect the intent of Congress to have OSHA amend the BBP standard to clarify

> * * * the direction already provided by OSHA in its Compliance Directive; namely, that employers who have employees with occupational exposure to bloodborne pathogens must consider and, where appropriate, use effective engineering controls, including safer medical devices, in order to reduce the risk of injury from needlesticks and from other sharp medical instruments * * * (Ex. 5–3).

Thus, the revised definitions do not reflect any new requirements being placed on employers with regard to protecting workers from sharps injuries, but are meant only to clarify the original standard, and to reflect the development of new safer medical devices since that time.

Paragraph (c)(1)(iv) of the standard is revised to add new requirements to the annual review and update of the Exposure Control Plan. The review and update of the plan is now required to ''(A) reflect changes in technology that eliminate or reduce exposure to bloodborne pathogens; and (B) document annually consideration and implementation of appropriate commercially available and effective safer medical devices designed to eliminate or minimize occupational exposure.'' Thus, the additional provisions require that employers, in their written Exposure Control Plans, account for innovations in procedure and technological developments that reduce the risk of exposure incidents. This would include, but would not be limited to, newly available medical devices designed to reduce the risk of percutaneous exposure to bloodborne pathogens. Consideration and implementation of safer medical devices could be documented in the Exposure Control Plan by describing the safer devices identified as candidates for adoption; the method or methods used to evaluate devices and the results of evaluations; and justification for selection decisions. This information must be updated at least annually.

The revised Exposure Control Plan requirements make clear that employers must implement the safer medical devices that are appropriate, commercially available, and effective. No one medical device is appropriate in all circumstances of use. For purposes of this standard, an ''appropriate'' safer medical device includes only devices whose use, based on reasonable judgment in individual cases, will not jeopardize patient or employee safety or be medically contraindicated. Although new devices are being continually introduced, OSHA recognizes that a safer device may not be available for every situation. If a safer device is not available in the marketplace, the employer is not required to develop any such device. Furthermore, the revised requirements are limited to the safer medical devices that are considered to be ''effective.'' For purposes of this standard, an ''effective'' safer medical device is a device that, based on reasonable judgment, will make an exposure incident involving a contaminated sharp less likely to occur in the application in which it is used.

Paragraph (c)(1)(v) of the revised standard now requires that ''An employer, who is required to establish an Exposure Control Plan shall solicit input from non-managerial employees responsible for direct patient care who are potentially exposed to injuries from contaminated sharps in the identification, evaluation, and selection of effective engineering and work practice controls and shall document the solicitation in the Exposure Control Plan.'' This change represents a new requirement, which is performance-oriented. No specific procedures for obtaining employee input are prescribed. This provides the employer with flexibility to solicit employee input in any manner appropriate to the circumstances of the workplace. A dental office employing two hygienists, for example, may choose to conduct periodic conversations to discuss identification, evaluation, and selection of controls. A large hospital, on the other hand, would likely find that an effective process for soliciting employee input requires the implementation of more formal procedures. The solicitation of input required by the standard requires employers to take reasonable steps to obtain employee input in the identification, evaluation, and selection of controls. Methods for soliciting employee input may include

involvement in informal problem-solving groups; participation in safety audits, worksite inspections, or exposure incident investigations; participation in analysis of exposure incident data or in job or process hazard analysis; participation in the evaluation of devices through pilot testing; and involvement in a safety and health committee properly constituted and operated in conformance with the National Labor Relations Act.

Employee input can serve to assist the employer in overcoming obstacles to the successful implementation of control measures. A number of respondents to the RFI indicated that they encountered some resistance when new devices required staff members to adopt new techniques, or when staff members perceived that use of the device might have an adverse effect on the patient (*e.g.,* Exs. 3–50, 3–79, 3–99, 3–133). As a way of addressing this resistance, staff involvement in the selection process can play an important role in the acceptance and proper use of safer medical devices (*e.g.,* Exs. 3–18, 3–42, 3–56, 3–88, 3–324, 3–355). According to their experience, the participation of frontline workers can help to overcome the following barriers:

- Safer medical devices often require adjustments in technique, and a number of respondents noted that staff members are often reluctant to revise practices to which they have become accustomed.
- Equipment compatibility problems. With the broad array of devices being used in healthcare settings, it is critical to ensure that devices will work together when necessary.
- The need for continued evaluation of devices and the allotment of sufficient time for adequate device evaluation. After initial use by employees, some facilities found it necessary to replace the device originally selected with a more suitable device.

The Community Health Network (CHN) of San Francisco provides an example of a safety and health committee with responsibility for sharps injury prevention (Ex. 5–5). Representatives of both labor and management serve on the committee, and are provided with access to non-confidential information regarding bloodborne pathogen exposure incidents at CHN facilities. The committee is responsible for establishing criteria for safer devices; overseeing device evaluation by representative groups of device users; and selecting preferred devices for purchase. The committee is also responsible for developing safer alternatives to work practices that are associated with exposure incidents.

The concept of involving a team in sharps injury prevention programs is supported by the American Hospital Association (AHA) in guidelines to assist hospitals and health systems in developing such programs (Ex. 5–1). According to AHA, a successful program revolves around communication, education, training, and collaboration. Among the specific steps recommended are assembling a multidisciplinary team that includes representation of frontline workers and departments using devices; selecting targeted devices for evaluation; pilot-testing of devices; and collecting data after a device is adopted to evaluate its impact.

The standard requires that employers seek input from non-managerial employees responsible for direct patient care who are potentially exposed to injuries from contaminated sharps. Employees involved in administering treatment or performing any procedure in the presence of an individual receiving care are considered to be involved in direct patient care. For example, an employee who uses a needled syringe to collect blood from patients in a nursing home, or an employee who administers flu vaccinations in a factory employee health unit, would both be considered to be involved in direct patient care and engaged in activities that put them at risk of direct exposure due to needlestick injuries. Employers may also choose to include other employees in the request for input, such as lab technicians, housekeeping staff, maintenance workers, and management-level personnel who may be at risk of injury involving contaminated sharps. An employer who is otherwise required to establish an Exposure Control Plan under the standard, but does not have any non-managerial employees responsible for direct patient care who are potentially exposed to injuries from contaminated sharps, is not required to solicit employee input with respect to this provision.

The revised standard does not require employers to request input from all potentially exposed employees involved in direct patient care; however, the employees involved by the employer should represent the range of exposure situations encountered in the workplace. Input from employees covered by a collective-bargaining agreement may also be requested through their authorized bargaining agent.

The revised standard requires that solicitation of input from employees be documented in the Exposure Control Plan. Employers can meet this obligation by identifying the employees who were involved and describing the process by which input was requested. Employers should also describe the input obtained with regard to identification, evaluation, and selection of controls. Evidence that employee input has been sought can include, for example, meeting minutes, copies of documents used to request employee participation, or records of responses received from employees such as reports evaluating the effectiveness of a safer medical device in trial applications.

The requirement for solicitation of input from employees has been designated as paragraph (c)(1)(v) in the revised standard. The requirement that the Exposure Control Plan be made available to the Assistant Secretary of Labor for Occupational Safety and Health and the Director of the National Institute for Occupational Safety and Health upon request, previously designated as paragraph (c)(1)(v), has been moved and is now paragraph (c)(1)(vi) in the revised standard.

The recordkeeping requirements of the standard at paragraph (h) have been amended by adding paragraph (h)(5) to require that employers maintain a sharps injury log to serve as a tool for identifying high risk areas and evaluating devices. Paragraph (h)(5)(i) now states, ''The employer shall establish and maintain a sharps injury log for the recording of percutaneous injuries from contaminated sharps. The information in the sharps injury log shall be recorded and maintained in such manner as to protect the confidentiality of the injured employee. The sharps injury log shall contain, at a minimum: (A) The type and brand of device involved in the incident, (B) the department or work area where the exposure incident occurred, and (C) an explanation of how the incident occurred.'' The sharps injury log must be maintained for the period required by 29 CFR 1904. The requirement to establish and maintain the log only applies to employers who are otherwise required to maintain a log of occupational injuries and illnesses under 29 CFR 1904 (OSHA's Recordkeeping rule).

The sharps injury log must include the specified minimum information regarding the device involved (if known), the location of the incident, and the description of the events that resulted in the injury. The level of detail presented should be sufficient to allow ready identification of the device, location, and circumstances surrounding an exposure incident (*e.g.,*

the procedure being performed, the body part affected, objects or substances involved and how they were involved) so that the intended evaluation of risk and device effectiveness can be accomplished.

Information in the sharps injury log must be recorded and maintained in a manner that protects the privacy of the injured employee. If data from the log are made available to other parties, any information that directly identifies an employee (e.g., name, address, social security number, payroll number) or information that could reasonably be used to identify indirectly a specific employee (*e.g.,* exact age, date of initial employment) must be withheld.

The format of the sharps injury log is not specified. The employer is permitted to determine the format in which the log is maintained (*e.g.,* paper or electronic), and may include information in addition to that required by the standard, so long as the privacy of injured workers is protected. The Agency recognizes that many employers already compile reports of percutaneous exposure incidents in a variety of ways. Existing mechanisms for collecting these reports will be considered sufficient to meet the requirements of the standard for maintaining a sharps injury log, provided that the information gathered meets the minimum requirements specified in the standard, and the confidentiality of the injured employee is protected.

Under newly published revisions to OSHA's Recordkeeping rule (29 CFR 1904), employers are required to record sharps injuries involving contaminated objects on the OSHA 300 Log of Work-Related Injuries and Illnesses and the OSHA 301 Injury and Illness Incident Report (the new forms replace the current 200 and 101 forms). When the revisions become effective, employers may elect to use the OSHA 300 and 301 forms to meet the sharps injury log requirements, provided two conditions are met. First, the employer must enter the type and brand of the device on either the 300 or 301 form. Second, the employer must maintain the records in a way that segregates sharps injuries from other types of work-related injuries and illnesses, or allows sharps injuries to be easily separated. For example, if OSHA 300 and 301 records are maintained on a computer, the employer must ensure that the computer is able to produce a record of sharps injuries that does not include other types of work-related injuries and illnesses (*i.e.,* through using a program that allows for sorting of entries by injury type). If records are kept on paper forms, the employer would need to use a separate page of the 300 Log for sharps injuries.

The revisions to the Recordkeeping rule will not become effective until January 1, 2002, at the earliest, and until then many sharps injuries involving contaminated objects will not be recordable on the OSHA log. Therefore, employers must keep a separate sharps log from the effective date of this rule until the revised Recordkeeping rule becomes effective.

These revisions to the BBP standard become effective April 18, 2001. Exposure Control Plans that are reviewed and updated on or after this effective date must reflect the requirements of the revised standard. Percutaneous exposure incidents that occur on or after this effective date must be recorded on the sharps injury log.

OSHA's BBP standard, including the amendments herein promulgated, is applicable to general industry and shipyard employment (as referenced in 29 CFR 1915.1030).

IV. Economic Analysis

Incremental Costs of the Mandated Revisions to the Standard

OSHA has determined that the total cost of this action is $33,814,991 per year, and thus, that it is not an economically significant regulatory action within the meaning of Executive Order 12866. However, the rule is defined as a significant rule under the Executive Order, and has been reviewed by the Office of Management and Budget. This amendment to the final standard does not involve any new engineering requirements to protect workers from sharps injuries, but it does include two new recordkeeping requirements: First, the amended standard requires employers to ''establish and maintain a sharps injury log for the recording of percutaneous injuries * * *'' However, for recordable needlestick incidents, OSHA already requires employers to collect much of the information needed for developing such a log under other rules, the Recording and Reporting Occupational Injuries and Illnesses regulation (29 CFR 1904) in particular. Moreover, OSHA has recently published revisions to 29 CFR 1904 that would cover the remaining, previously nonrecordable needlestick injuries. Second, the current action requires any employer ''who is required to establish an Exposure Control Plan'' to ''solicit input from non-managerial employees responsible for direct patient care who are potentially exposed to injuries from contaminated sharps in the identification, evaluation, and selection of effective engineering and work practice controls and shall document the solicitation in the Exposure Control Plan.'' The methodology OSHA has used for computing costs for each requirement of the amended standard is presented in the next two sections.

Cost of Establishing and Maintaining a Sharps Injury Log

The rule requires employers to maintain a log for all needlestick and sharps injuries. At a minimum, the sharps injury log must contain: ''(A) The type and brand of device involved in the incident, (B) the department or work area where the exposure incident occurred, and (C) an explanation of how the incident occurred.'' The costs attributable to the log correspond directly to the number of needlestick and sharps injuries. The International Health Care Worker Safety Center (IHCWSC) provides the best available estimate of the number of needlestick injuries (Ex. 3–172V). IHCWSC has computed that 590,164 needlestick and sharps injuries occur annually.

Needlestick and sharps injury cases will require an effort pertaining to collection of data on the type and brand of device, the department or work area where the incident occurred, and an explanation of how the incident occurred. Because the amount of information required to be collected is limited, OSHA estimates that it will require an average of five minutes per case (0.08 hours) to collect the data and enter it onto the separate log. Assuming that the task of collecting information related to the incident and entry onto the log will be conducted by an individual with the skill level of a Personnel Training and Labor Relations Specialist, an hourly wage of $26.32 is used to compute cost. (The hourly wage for Personnel Training and Labor Relations Specialist as reported in the Bureau of Labor Statistics Occupational Employment Statistics Survey is $19.03; benefits are computed at 38.3 percent of the hourly wage.) Thus, the incremental annual cost of the separate sharps injury log is:

$$(590{,}164 \text{ cases}) \times (0.08 \text{ hours/case}) \times (\$26.32/\text{hour}) = \$1{,}294{,}352.$$

In summary, OSHA estimates that the total annual cost of maintaining a sharps injury log will be $1,294,352. This estimate is likely to overstate true costs for at least three reasons. First, for already recordable incidents, the data needed to maintain a separate sharps injury log are already collected and entered into a log format for other purposes, namely for the requirements set forth by 29 CFR Part 1904. It is unlikely that the data will need to be ''re-entered.'' Instead, businesses are likely to develop procedures for automating the process or for organizing log information, thereby significantly reducing the incremental costs associated with this incremental action. For nonrecordable cases, the data collection required by the Needlestick Safety and Prevention Act and this revision to the BBP standard will be required under 29 CFR Part 1904 (once revisions to Part 1904 become effective), so that the incremental costs associated with the separate sharps injury log are short-term in nature. Finally, and perhaps most importantly, the above cost estimate significantly overstates costs because it includes costs for all establishments in SIC 80. Under revisions to 29 CFR Part 1904, SICs 801, 802, 803, 804, 807, and 809 are exempted from recordkeeping requirements under Part 1904 and will thus not be required by this amendment to the BBP standard to keep a needlestick and sharps injury log. This is potentially significant because SICs 801, 802, 803, 804, 807, and 809 constitute 31 percent of employment for SIC 80, though not necessarily 31 percent of sharps injuries.

Cost of Solicitation of Employee Input

The cost associated with solicitation of employee input is comprised of three components: (1) The initial solicitation, conducted by a manager; (2) the employee response; and (3) documentation of the solicitation in the Exposure Control Plan.

The cost of the initial solicitation is likely to vary with establishment size, number of incidents, and employee interest. The establishments that will be affected are those that are: (1) Required to develop an Exposure Control Plan, and (2) have employees who are involved in direct patient care and who are potentially exposed to needlestick injuries. The overwhelming majority of such establishments are in SIC 80, Health Services. County Business Patterns reports that in 1997 (1997 data are used as the most recent year for which data are available using the SIC reporting system), there were 502,724 establishments in SIC 80. OSHA estimates that the initial solicitation or call for employee input will require an average of 15 minutes (0.25 hours) of managerial time. The wage rate of a Medicine and Health Care Manager is $33.22 per hour, including fringe benefits. (The hourly wage for a Medicine and Health Care Manager reported in the Bureau of Labor Statistics Occupational Employment Statistics Survey is $24.02; benefits are computed at 38.3 percent of the hourly wage.) The estimated cost of the initial solicitation is:

$$(502{,}724 \text{ establishments}) \times (0.25 \text{ hours/establishment}) \times (\$33.22/\text{hour}) = \$4{,}175{,}080.$$

The cost associated with the employee response varies with the number of employees and the response rate to the initial solicitation. According to County Business Patterns, there were 11,348,141 individuals employed in SIC 80 in 1997. OSHA estimates that it will require 15 minutes (0.25 hours) of employee time to respond to the solicitation and that approximately 33 percent of employees will respond. Using a wage rate of $25.90 (which is the total hourly compensation in 1998 for professional specialty and technical employees in Health Services reported in the Bureau of Labor Statistics publication Employer Costs for Employee Compensation, 1986–1988), the estimated costs associated with employee response are:

$$(11{,}348{,}141 \text{ employees}) \times (33\% \text{ response rate}) \times (0.25 \text{ hours/employee}) \times (\$25.90/\text{hour}) = \$24{,}248{,}140.$$

Note that it is implicitly assumed that input is solicited from *all* employees. This assumption will result in an overstatement of costs because the standard requires that input be solicited only from the fraction of employees who are involved in direct patient care and who are potentially exposed to needlestick injuries.

Finally, the revised standard requires that the employer document the solicitation in the Exposure Control Plan. Because the affected employers are already required to establish a Plan, the incremental effort associated with this documentation will be small. OSHA estimates that it will require only 15 minutes (0.25 hours) of managerial time. Thus, the total annual cost of documenting the solicitation in the Exposure Control Plan is estimated to be:

$$(502{,}724 \text{ establishments}) \times (0.25 \text{ hours/establishment}) \times (\$33.22/\text{hour}) = \$4{,}175{,}080.$$

In summary, OSHA has estimated the total cost of the solicitation to be $32,598,300 ($4,175,080 + $24,248,140 + $4,175,080). This estimate is likely to overstate the cost because employers have several avenues for achieving this requirement of the standard, many of which will reduce costs. For example, employers are not required to solicit input from all employees and could meet the requirement by, for example, consulting a properly constituted safety committee consisting of a subset of employees. In fact, recent state legislation has mandated sharps safety committees in a number of states. In these situations, the only incremental cost associated with the solicitation mandated by this amendment to the BBP standard will be documentation of the solicitation in the Exposure Control Plan.

Total Cost and Cost Per Establishment

According to the above analysis, the maximum total annual cost of this action is $33,892,653, consisting of $1,294,352 associated with maintaining a sharps injury log and $32,598,300 associated with soliciting and documenting employee input into the Exposure Control Plan. This amounts to $67 per establishment, per year, which will not cause significant economic impact on either large or small affected establishments.

V. Unfunded Mandates

OSHA has determined that, for the purposes of section 202 of the Unfunded Mandates Reform Act of 1995 (2 U.S.C. 1532), this rule does not include any

federal mandate that may result in increased expenditures by state, local, or tribal governments in the aggregate of more than $100 million, or increased expenditures by the private sector of more than $100 million. Moreover, the Agency has determined that for purposes of section 203 of the Act, this rule does not significantly or uniquely affect these entities.

Background

The Unfunded Mandates Reform Act was enacted in 1995. While much of the Act is designed to assist the Congress in determining whether its actions will impose costly new mandates on state, local, and tribal governments, the Act also includes requirements to assist federal agencies to make this same determination with respect to regulatory actions.

Analysis

As discussed in Section IV, Economic Analysis, this rule will have incremental costs of $34 million per year, all of which are associated with maintaining the sharps injury log and soliciting and documenting employee information. These total costs represent an average cost of $67 per year per affected establishment. OSHA does not anticipate any disproportionate budgetary effects upon any particular region of the nation, or particular state, local or tribal governments, or urban or rural communities.

VI. Environmental Impacts

The National Environmental Policy Act requires that ''major Federal actions significantly affecting the quality of the human environment'' be accompanied by a statement addressing the environmental impact of the proposed action. (42 U.S.C. 4332(C)) Department of Labor regulations establish a criteria for determining when an environmental impact statement is required in a rulemaking proceeding:

> Preparation of an environmental impact statement will always be required for proposals for promulgation, modification or revocation of health standards which will significantly affect air, water or soil quality, plant or animal life, the use of land or other aspects of the human environment.

29 CFR 11.10 (a)(3)

OSHA has concluded that no significant environmental impacts would result from this rulemaking. This final standard expands the universe of engineering controls permissible for reducing occupational exposure to bloodborne pathogens. It also widens the scope of Exposure Control Plan review, requires maintenance of a sharps injury log, and mandates the solicitation of input from employees on the identification, evaluation, and selection of effective engineering and work practice controls. The Agency has not identified any impacts of these requirements on the environment.

VII. Federalism

This standard has been reviewed in accordance with the Executive Order on Federalism (Executive Order 13132, 64 FR 43255, Aug. 10, 1999). The order requires that agencies, to the extent possible, refrain from limiting state policy options; consult with states prior to taking actions that would restrict state policy options; and take such action only when there is clear constitutional authority and the presence of a problem of national scope. Executive Order 13132 also provides that agencies shall not promulgate regulations that have significant Federalism implications and impose substantial direct compliance costs on state or local governments, unless the agency consults with state and local officials early in the process of developing the proposed regulation and provides a summary Federalism impact statement in the preamble of the final rule. Finally, the Order provides for preemption of state law only if there is a clear Congressional intent for the agency to do so, and provides that any such preemption is to be limited to the extent possible.

Under Section 6(b) of the Executive Order, an agency is exempt from state consultation requirements if it is promulgating a regulation that is required by statute. The amendments to OSHA's BBP standard codified in this rule were explicitly written by Congress and enacted as Public Law 106–430. Moreover, Congress clearly intended the revised BBP standard to have the same legal effect as other standards issued under 6(b) of the Occupational Safety and Health Act of 1970. Nonetheless, OSHA has consulted extensively with those 25 States and territories that operate OSHA-approved State plans with regard to OSHA policy on safe needle devices and the requirements of the subject legislation.

Section 18 of the OSH Act expresses Congress' intent to preempt state laws relating to issues on which Federal OSHA has promulgated occupational safety and health standards. Under the OSH Act, a state can avoid preemption only if it submits, and receives Federal approval for, a State plan for the development and enforcement of standards. OSHA-approved State plans operate under authority of State law and must adopt occupational safety and health standards which, among other things, must be at least as effective in providing safe and healthful employment and places of employment as Federal standards.

In *Gade* v. *National Solid Wastes Management Assoc.,* the U.S. Supreme Court reaffirmed the view that Section 18 of the OSH Act effectively preempts states without approved plans from adopting or enforcing any laws that directly, substantially, and specifically regulate occupational safety and health. 505 U.S. 88, 107 (1992). However, needlestick laws in states without an OSHA-approved State plan would not be affected to the extent to which they regulate the occupational safety and health conditions of state or local government employees (see Section 3(5) of the OSH Act).

VIII. State Plan States

The 23 states and 2 territories that operate their own federally approved occupational safety and health plans must adopt a comparable amended standard within six months of the publication date of a final Federal OSHA standard. The States and territories with this obligation include: Alaska, Arizona, California, Connecticut (for State and local government employees only), Hawaii, Indiana, Iowa, Kentucky, Maryland, Michigan, Minnesota, Nevada, New Mexico, New York (for State and local government employees only), North Carolina, Oregon, Puerto Rico, South Carolina, Tennessee, Utah, Vermont, Virginia, Virgin Islands, Washington, and Wyoming. Until such time as state and territorial standards are amended, Federal OSHA will provide interim enforcement assistance, as appropriate.

IX. Paperwork Reduction Act

This final rule contains new collection of information (paperwork) requirements in revisions to the Bloodborne Pathogen Standard (1910.1030 and 1915.1030) made as a result of the Needlestick Safety and Prevention Act (Pub. L. 106–430). These new paperwork requirements are subject to review by the Office of Management and Budget (OMB) under the Paperwork Reduction Act of 1995 (PRA 95), 44 U.S.C. 3501 *et seq.*, and its regulation at 5 CFR Part 1320. OSHA solicits public comments concerning its estimate of the burden hours and costs for the revised paperwork requirements. The Agency will summarize the comments received and include a summary of them in its request to OMB to approve the information collection requirements; they will also become a matter of public record. OSHA seeks this information as part of its continuing effort to reduce

paperwork and respondent burden. The information helps to ensure that requested data can be provided in the desired format, reporting burden (time and financial resources) is minimized, collection instruments are clearly understood, and the impact of collection requirements on respondents can be properly assessed.

The Needlestick Safety and Prevention Act requires employers, who have exposure control plans in accordance with § 1910.1030 (c)(1)(iv), ''to review and update such plans to reflect changes in technology that eliminate or reduce exposure to bloodborne pathogens.'' The exposure control plan must also ''document consideration and implementation of appropriate commercially available and effective safer medical devices designed to eliminate or minimize occupational exposure.'' Employers required to have exposure control plans must also ''solicit input from non-managerial employees responsible for direct patient care who are potentially exposed to injuries from contaminated sharps in the identification, evaluation, and selection of effective engineering and work practice controls and shall document the solicitation in the Exposure Control Plan.''

The Needlestick Safety and Prevention Act also requires employers, who currently maintain a log of occupational injuries and illnesses under 29 CFR 1904, to ''establish and maintain a sharps injury log for the recording of percutaneous injuries from contaminated sharps.'' The information in the sharps injury log must be recorded and maintained so that the confidentiality of the injured worker is protected. The log must contain at least the following information: ''(A) the type and brand of device involved in the incident; (B) the department or work area where the exposure incident occurred; and (C) an explanation of how the incident occurred.''

Respondents are not required to comply with collection of information (paperwork) requirements unless a currently valid OMB control number is displayed (§ 1320.5 (b)(2)(i)). OSHA will publish the OMB control number as soon as it receives approval on its ICR for the revised collections. A copy of the Agency's revised ICR for the BBP standard is available for inspection and copying as part of Docket ICR1218–0180(2000) in the OSHA Docket Office, U.S. Department of Labor, Room N–2625, 200 Constitution Avenue, NW., Washington, DC 20210, or you may request a mailed copy by telephoning Todd Owen at (202) 693–2444.

Comments on the ICR should be submitted to the Docket Office, Docket Number ICR–0180 (2001), OSHA, U.S. Department of Labor, Room N–2625, 200 Constitution Avenue, NW., Washington, DC 20210, telephone: (202) 693–2350. Commenters may transmit written comments of 10 pages or less in length by facsimile to (202) 693–1648.

The Department and OMB are particularly interested in comments that

- Evaluate whether the proposed collection of information is necessary for the proper performance of the functions of the agency, including whether the information will have practical utility;
- Evaluate the accuracy of the Agency's estimate of the burden of the proposed collection of information, including the validity of the methodology and assumptions used;
- Enhance the quality, utility, and clarity of the information to be collected; and
- Minimize the burden of the collection of information on those who are to respond, including through the use of appropriate automated, electronic, mechanical, or other technological collection techniques or other forms of information technology, *e.g.,* permitting electronic submission of responses.

Title: Bloodborne Pathogens standard (29 CFR 1910.1030).

OMB Number: 1218–0180 (Revision).

Frequency: Employers must: annually review their exposure control plans; initially establish and maintain a sharps injury log; as necessary, make injury recordings in the log; and solicit input from non-managerial employees.

Affected Public: The respondents are those employers that must maintain an exposure control plan, and employers who are required to maintain a log of occupational injuries and illnesses under 29 CFR part 1904.

Total Respondents: 502,724 establishments.

Average time per response: Three to five minutes for employers to record needlestick incidents; fifteen minutes for employers to solicit non-managerial employees on effective engineering and work practice controls; fifteen minutes for employers to modify their existing exposure control plans.

Estimated Burden Hours: 49,180 hours for employers to log needlestick incidents; 125,681 hours for employers to solicit non-managerial employees; and 125,681 hours for employers to update existing exposure control plans.

Estimated Cost (Operation and Maintenance): 0.

X. Authority and Signature

This document was prepared under the direction of Charles N. Jeffress, Assistant Secretary of Labor for Occupational Safety and Health, U.S. Department of Labor, 200 Constitution Avenue, NW., Washington, DC 20210.

Accordingly, pursuant to sections 4, 6, and 8 of the Occupational Safety and Health Act of 1970 (29 U.S.C. 653, 655, 657) and the Needlestick Safety and Prevention Act (Pub. L. 106–430, 114 Stat. 1901, November 6, 2000); and Secretary of Labor's Order No. 3–2000 (65 FR 50017), 29 CFR part 1910 is amended as set forth below.

List of Subjects in 29 CFR Part 1910

Blood, Blood diseases, Health, Healthcare, Hepatitis B virus, Hepatitis C virus, Hospitals, Human immunodeficiency virus, Needlestick, Occupational safety and health, Sharps injury.

Signed at Washington, DC, this 10th day of January 2001.

Charles N. Jeffress,

Assistant Secretary of Labor for Occupational Safety and Health.

XI. Amended Final Rule and Appendix

The Occupational Safety and Health Administration is amending part 1910 of title 29 of the Code of Federal Regulations as follows:

PART 1910—OCCUPATIONAL SAFETY AND HEALTH STANDARDS

1. The authority citation for 29 CFR part 1910, subpart Z, is revised to read as follows:

Authority: Sections 4, 6, and 8 of the Occupational Safety and Health Act of 1970 (29 U.S.C. 653, 655, 657); Secretary of Labor's Order No. 12–71 (36 FR 8754), 8–76 (41 FR 25059), 9–83 (48 FR 35736), 1–90 (55 FR 9033), 6–96 (62 FR 111), or 3–2000 (65 FR 50017), as applicable; and 29 CFR part 1911.

All of subpart Z issued under Sec. 6(b) of the Occupational Safety and Health Act, except those substances that have exposure limits listed in Tables Z–1, Z–2, and Z–3 of 29 CFR 1910.1000. The latter were issued under Sec. 6(a) (29 U.S.C. 655(a)).

Section 1910.1000, Tables Z–1, Z–2 and Z–3 also issued under 5 U.S.C. 553, Section 1910.1000 Tables Z–1, Z–2, and Z–3 not issued under 29 CFR part 1911 except for the arsenic (organic compounds), benzene, and cotton dust listings.

Section 1910.1001 also issued under section 107 of the Contract Work Hours and Safety Standards Act (40 U.S.C. 333) and 5 U.S.C. 553.

Section 1910.1002 not issued under 29 U.S.C. 655 or 29 CFR part 1911; also issued under 5 U.S.C. 553.

Sections 1910.1018, 1910.1029 and 1910.1200 are also issued under 29 U.S.C. 653.

Section 1910.1030 is also issued under Pub. L. 106–430, 114 Stat. 1901.

* * * * *

2. Section 1910.1030 is amended as follows:

A. In § 1910.1030, paragraph (b), the definition for ''Engineering Controls'' is revised and definitions are added in alphabetical order to read as set forth below:

B. Paragraph (c)(1)(iv) is revised to read as set forth below:

C. Paragraph (c)(1)(v) is redesignated paragraph (c)(1)(vi), and a new paragraph (c)(1)(v) is added to read as set forth below:

D. A new paragraph (h)(5) is added to read as set forth below:

§ 1910.1030 Bloodborne pathogens.

* * * * *

(b) * * *

Engineering controls means controls (e.g., sharps disposal containers, self-sheathing needles, safer medical devices, such as sharps with engineered sharps injury protections and needleless systems) that isolate or remove the bloodborne pathogens hazard from the workplace.

* * * * *

Needleless systems means a device that does not use needles for:

(1) The collection of bodily fluids or withdrawal of body fluids after initial venous or arterial access is established;

(2) The administration of medication or fluids; or

(3) Any other procedure involving the potential for occupational exposure to bloodborne pathogens due to percutaneous injuries from contaminated sharps.

* * * * *

Sharps with engineered sharps injury protections means a nonneedle sharp or a needle device used for withdrawing body fluids, accessing a vein or artery, or administering medications or other fluids, with a built-in safety feature or mechanism that effectively reduces the risk of an exposure incident.

* * * * *

(c) * * *

(1) * * *

(iv) The Exposure Control Plan shall be reviewed and updated at least annually and whenever necessary to reflect new or modified tasks and procedures which affect occupational exposure and to reflect new or revised employee positions with occupational exposure. The review and update of such plans shall also:

(A) Reflect changes in technology that eliminate or reduce exposure to bloodborne pathogens; and

(B) Document annually consideration and implementation of appropriate commercially available and effective safer medical devices designed to eliminate or minimize occupational exposure.

(v) An employer, who is required to establish an Exposure Control Plan shall solicit input from non-managerial employees responsible for direct patient care who are potentially exposed to injuries from contaminated sharps in the identification, evaluation, and selection of effective engineering and work practice controls and shall document the solicitation in the Exposure Control Plan.

* * * * *

(h) * * *

(5) *Sharps injury log.* (i) The employer shall establish and maintain a sharps injury log for the recording of percutaneous injuries from contaminated sharps. The information in the sharps injury log shall be recorded and maintained in such manner as to protect the confidentiality of the injured employee. The sharps injury log shall contain, at a minimum:

(A) The type and brand of device involved in the incident,

(B) The department or work area where the exposure incident occurred, and

(C) An explanation of how the incident occurred.

(ii) The requirement to establish and maintain a sharps injury log shall apply to any employer who is required to maintain a log of occupational injuries and illnesses under 29 CFR 1904.

(iii) The sharps injury log shall be maintained for the period required by 29 CFR 1904.6.

* * * * *

[FR Doc. 01–1207 Filed 1–17–01; 8:45 am]

BILLING CODE 4510–26–P

Federal Register

Thursday,
January 18, 2001

Part X

Department of Labor

Office of the Secretary

29 CFR Part 4

Service Contract Act; Labor Standards for Federal Service Contracts; Final Rule

DEPARTMENT OF LABOR

Office of the Secretary

29 CFR Part 4

RIN 1215–AB26

Service Contract Act; Labor Standards for Federal Service Contracts

AGENCY: Wage and Hour Division, Employment Standards Administration, Labor.

ACTION: Final rule.

SUMMARY: This document adopts as a final rule an amendment to the regulations exempting certain contracts for commercial services meeting specific criteria from coverage under the McNamara-O'Hara Service Contract Act (SCA). The proposed regulation was issued based on a request by the Administrator for Federal Procurement Policy, Office of Federal Procurement Policy (OFPP), in a May 12, 1999, letter to the Secretary of Labor, representing that the requested exemptions were both necessary and proper in the public interest, and in accord with the remedial purpose of the SCA to protect prevailing labor standards. Amendments/modifications were made to the OFPP-requested exemptions based on the written comments submitted in response to the proposed rule.

EFFECTIVE DATE: March 19, 2001.

FOR FURTHER INFORMATION CONTACT: William W. Gross, Director, Office of Wage Determinations, Wage and Hour Division, Employment Standards Administration, U.S. Department of Labor, Room S–3028, 200 Constitution Avenue, NW., Washington, DC 20210; telephone (202) 693–0062. This is not a toll-free number.

SUPPLEMENTARY INFORMATION:

I. Paperwork Reduction Act

This rule contains no reporting or recordkeeping requirements subject to the Paperwork Reduction Act of 1980 (Pub. L. 96–511). The existing information collection requirements contained in Regulations, 29 CFR part 4 were previously approved by the Office of Management and Budget under OMB control number 1215–0150.

II. Background

On October 1, 1995, the Federal Acquisition Regulations were amended to implement provisions of the Federal Acquisition Streamlining Act (FASA). One provision of the final regulation, 48 CFR 12.504(a)(10), provided that the requirements of the McNamara-O'Hara Service Contract Act (SCA) are not applicable to subcontracts at any tier for the acquisition of commercial items or services. This provision of the final rule had not been included in the proposed regulation. When the Department of Labor became aware of the regulation, the Administrator of the Wage and Hour Division wrote to the Administrator for Federal Procurement Policy, OFPP, questioning the appropriateness of the FAR regulation. The Department of Labor stated its view that questions of coverage and exemptions under the SCA were properly within the purview of the Secretary of Labor pursuant to section 4 of SCA. After a review of the issue by the FAR Council the Administrator for Federal Procurement Policy wrote to the Secretary of Labor and requested that the Department propose an exemption for a more limited group of commercial service contracts (both prime contracts and subcontracts). The Administrator stated that the FAR Council had concluded that a blanket exemption of all subcontracts for commercial items may not adequately serve the Administration's policy of supporting exemptions of the SCA only where they do not undermine the purposes for which the SCA was enacted. In addition, the FAR Council recognized the Department's authority to exempt contracts as well as subcontracts on all types of contracts. Therefore the FAR Council agreed that any exemption from the coverage of SCA for subcontracts for the acquisition of commercial items or components should be accomplished under the Secretary of Labor's authority in the SCA, and stated that it would withdraw the FAR provision.

The FAR Council indicated that the adoption of their recommendations would further the commitment of the Administration to be more commercial-like, encourage broader participation in government procurement by companies doing business in the commercial sector, and reinforce their commitment to reduce government-unique terms and conditions from their contracts. Furthermore, the FAR Council represented that the limited exemptions that it proposed could be accomplished without compromising the remedial purpose of the SCA to protect prevailing labor standards.

On July 26, 2000, the Department of Labor published an NPRM, proposing the limited exemption from the SCA recommended by the FAR Council. On the same date, the FAR Council published a final rule in the **Federal Register** removing SCA from the list of laws inapplicable to subcontracts for commercial items, previously at FAR at 48 CFR 12.504(a)(10). The FAR final rule became effective August 25, 2000. As a result, a small group of commercial subcontracts that were previously exempted under the FAR rule and that also meet the requirements of DOL's proposed rule could change from exempt to nonexempt and back to exempt if the DOL proposal becomes final as it was proposed. Therefore, to prevent the disruption that could be caused by such changes, including the possible disruption of services if the current subcontractor did not agree to continue the subcontract services under the requirements of SCA, the Department also published a final rule in the same **Federal Register**, temporarily exempting from the SCA those commercial subcontracts which met the criteria of the proposed rule. The rule was to remain in effect for one year, or until final action was taken on the NPRM, whichever occurred first. With the publication of this final rule, the final rule for commercial subcontracts is superceded and is withdrawn.

The NPRM addressed two separate but somewhat related issues. First, the NPRM proposed to modify the current exemption for the maintenance and repair of Automated Data Processing (ADP) equipment, 29 CFR 4.123(e)(1), to reflect terminology changes in law that have occurred since the exemption was originally established; broaden the exemption to cover information technology as currently defined; apply the exemption to installation services; and apply the exemption to subcontracts as well as prime contracts. Second, a new exemption was proposed, similar to the current ADP exemption, to exempt both prime contractors and subcontractors for a specified subset of commercial services that meet certain criteria.

III. Summary/Analysis of the Comments

A total of eleven comments were received. Three comments from contractor associations are generally supportive of but recommend certain changes to the proposed exemption. Eight comments—one from a contractor association and seven from union organizations—are generally opposed to all or specific portions of the proposed exemption. Since most of the comments focus on the proposed services or the proposed criteria for exemption, this summary also is organized on the basis of individual services and criteria.

Before addressing the individual services, however, several commenters raise an overarching issue regarding the statutory and regulatory requirements for exemption under the Service Contract Act. The American Federation

of Labor—Congress of Industrial Organizations (AFL–CIO), the Laborers' International Union of North America (LIUNA), and the Building and Construction Trades Department, AFL–CIO (Building Trades), note that section 4(b) of SCA limits the Secretary of Labor the authority to grant exemptions from SCA to those situations where the exemption is ''necessary and proper in the public interest or to avoid the serious impairment of government business, and is in accord with the remedial purpose of this Act to protect prevailing labor standards.'' The AFL–CIO and LIUNA further note that 29 CFR 4.123, the Department's regulation implementing section 4(b) of SCA, provides that ''a request for exemption from the Act's provisions will be granted upon a strong affirmative showing'' that the statutory requirements for exemption are met. They argue that the reasons proffered are inadequate as a matter of law. The AFL–CIO further states that the FAR Council offers no factual support for its requested exemption, and that ''the Department cannot defer to the FAR Council's unsupported 'representations' as to whether the exemptions satisfy the 'public interest' and serious impairment' standards.''

The Department agrees that exemptions from the SCA may only be granted upon a strong affirmative showing that the statutory requirements for exemption are met. This does not mean, however, that the Department cannot or should not give great weight to the representations of the FAR Council. The FAR Council's experience with and knowledge of the Federal procurement process is clear, and we believe it is appropriate to give the FAR Council's representations due consideration. Absent evidence or arguments to the contrary, a representation by the FAR Council may constitute a ''strong affirmative showing'' that the requirements for exemption are met. Therefore, on the one hand, we did not summarily reject the FAR Council's request, and on the other hand, the FAR Council's representations have not been accepted without question. They have been evaluated in light of the comments received.

The AFL–CIO also argues that there is no basis for the proposal to expand the FAR exemption for subcontracts to both prime contracts and subcontracts. The Department disagrees with this comment. The Department notes that SCA coverage and exemptions are commonly applicable to both prime contracts and subcontracts, and the Department sees no basis for limiting the exemption for certain commercial services to subcontracts, provided the required showing is met.

A. Expansion of the current ADP exemption

Based upon the recommendation of the FAR Council, the Department proposed that the current ADP maintenance exemption be updated to reflect the current statutory definition of ''information technology'' and be consistent with other regulations. Further, the proposal added installation services to the current regulatory exemption where those services are not subject to the Davis-Bacon Act. The FAR Council noted that service contracts often involve installation of information technology (IT) equipment, for example installing and maintaining a local area network, or installing and maintaining new telephones or a telephone system. The same employees are performing installation as are performing maintenance and repair services. Thus, the FAR Council argued that the same conditions supporting the exemption for the maintenance services also support an exemption for installation services. Finally, the FAR Council recommended that the exemption be made applicable to subcontracts as well as prime contracts.

The Council of Defense and Space Industry Associations (CODSIA) and the Contract Services Association (CSA) support the expansion of the current ADP exemption to a broader IT definition. CODSIA states that it is ''pleased that the Department of Labor has virtually exempted all IT prime and subcontracts from the Service Contract Act.'' CSA states that the ''new 'ADP' exemption has been significantly enlarged to a new definition of IT.'' Both CODSIA and CSA state that the proposed rule recognizes that ''the IT marketplace provides a vibrant and effective guarantor of fair wage practices for virtually all IT workers.''

The AFL–CIO, LIUNA and the Building Trades all oppose changing the current ADP exemption to adopt a new information technology definition. The unions also oppose the addition of installation services. The AFL–CIO states that the ''growth of data networks does not change the fundamental distinction between the manipulation of data by computers—which is automated data processing—and the transmission of data over telecommunications networks—which is a telecommunications service.'' The AFL–CIO further states that installing and maintaining new telephone lines or a telephone system is not automated data processing. The AFL–CIO states that the proposal ''inappropriately extends the ADP exemption to service work that involves the 'switching, interchange, transmission, or reception of data or information.' ''

It goes on to note:

> ''Installation and maintenance of telephone lines (where unregulated) has historically been covered by the SCA. The service work has not changed substantially even when installation and maintenance involves data rather than voice networks. The service work involved in the installation and maintenance of a local area data network is comparable to the service work involved in the installation and maintenance of a voice PBX or Centrex system, work which is currently covered by the SCA.''

The FAR Council's request to change the current ADP definition was made primarily to reflect the current statutory definition of information technology and be consistent with other regulations. The FAR Council did not indicate that the definition needed to be expanded because it was having difficulty procuring telecommunications services. With respect to the addition of installation services, the FAR Council indicated only that the same employees are performing installation services as are performing maintenance and repair services. Thus, the FAR Council concluded that the same conditions supporting the exemption for maintenance services also support an exemption for installation services.

Based upon this description, the Department did not view the change in definition to ''information technology'' and the addition of installation services to be a significant expansion to the ADP exemption. Rather, the Department considered these changes to be mostly language changes to reflect other statutory terminology changes. The comments—both for and against the proposed change—clearly indicate that the proposed change is a significant expansion of the current exemption. In this light, we have concluded that the present record does not constitute a ''strong affirmative showing'' that the proposed exemption meets the requirements for exemption in section 4(b) of the Act. Therefore, the current ADP definition will be retained and installation services will not be added to the scope of exempt ADP maintenance services.

With respect to applying the ADP exemption to subcontracts, the Department specifically asked ''whether there is any reason that the exemption at the prime contract level should not be applied equally to subcontracts that meet the criteria.'' As mentioned above, SCA coverage and exemptions ordinarily apply to both prime and

subcontracts, where the criteria are met. There were no substantive comments against the application of the ADP exemption to both prime and subcontracts. That aspect of the proposed change will be retained. However, the certification requirement is modified to make it clear that a certification by a prime contractor that it meets the criteria also constitutes a certification that if it subcontracts the services, the subcontractor in turn will meet the criteria.

CODSIA and CSA also express concern that the NPRM apparently eliminated ''scientific equipment and medical apparatus equipment'' from the exemption. To the contrary, the Department did not propose to eliminate such equipment. Rather, the NPRM simply did not reprint those portions of the regulation that were not affected by the proposal. The final regulation reprints the exemption in its entirety, with the clarification that in order to be exempt, a contract or subcontract must be principally for the services in question.

B. New exemptions for Commercial Services

The NPRM was intended to address certain situations where an employee's work on a government contract represents a small portion of his or her time and the balance of the time is spent on commercial work. In such cases, the FAR Council represented that the Government loses the full benefits of competition for its service contracts because some contractors decline to compete for Government work due to specific government requirements. To remedy this situation, the FAR Council recommended an exemption framework that it believed would protect prevailing labor standards and avoid the undercutting of such standards by contractors. The proposed exemption would apply only to a specified list of commercial services for which the FAR Council has found a particular need for an SCA exemption. In addition, in order that the exemption comport with the statutory requirement that it be in accord with the remedial purposes of the Act to protect prevailing labor standards, the proposed regulation provided a number of criteria which must be satisfied.

In selecting the services to which it believed the new exemption should apply, the FAR Council focused on services which the Government is having difficulty acquiring or for which the Government is getting limited competition, or where the Government is unable to acquire the quality of services needed because commercial sources are reluctant to do business with the Government, thereby causing impairment to Government business. The FAR Council stated that it avoided selecting services where the Government may be in a position to motivate the payment of less than prevailing wages by contractors striving to win Government contracts. The factual basis for the FAR Council's view that the proposed exemption for each of the specified services is necessary and proper in the public interest or to avoid the serious impairment of Government business was set forth in the NPRM.

1. Proposed Exempt Services

a. Automated data processing and telecommunication services. Unlike the current exemption for ADP equipment, which applies to maintenance and service of ADP hardware, the new proposed exemption for ADP and telecommunications services would have exempted a broad range of software-type services within the information technology industry. The FAR Council explained that in this information age, the Federal Government is contracting for more and more information technology (IT) services. This is driven by the need to maximize the use of technology to improve the efficiency and effectiveness of agency performance. However, increasingly the Government is less of a player in the IT marketplace in terms of market share (less than 3%). IT providers have an abundance of work in an industry with a tight labor market. The FAR Council stated that IT providers are often reluctant or unwilling to deal with Government unique requirements such as the Service Contract Act when they have an abundance of work available and are experiencing difficulty keeping pace with their commercial work. The FAR Council further represented that unless the Federal Government can more closely align the Government's contracting practices and requirements with commercial practice, it will not be able to generate enough interest to permit the Federal Government to take full advantage of the opportunities to use information technology and to obtain the requisite quality of services needed to satisfy critical agency mission needs.

Many of the comments group this new proposed exemption for software services with the ADP maintenance services and the comments clearly address both proposed exemptions. For example, CODSIA and CSA are ''pleased that the Department of Labor has virtually exempted all IT prime and subcontracts.'' Other than this broad reference to IT, CODSIA and CSA do not separately comment on the individual services on the proposed list. With respect to the new list of services, both CODSIA and CSA primarily express concern that this list is too limited.

Similarly, most of the union commenters comment together on both the new ADP/telecommunications exemption and the expansion of the current ADP exemption. In commenting on the proposed new exemption for ADP and telecommunication services, the AFL–CIO states that ''one of the predominant purposes and effect of the proposed rule is to eliminate coverage in one of the largest growth sectors of the Nation's economy, the ADP, IT and telecommunications industry.'' The AFL–CIO and the Building Trades contend that the services within the scope of this proposed new exemption ''are performed by many employees enjoying the protection of prevailing wage standards under the SCA. There is no guarantee that these service employees will not experience a reduction in wages and benefits or lose their jobs as a result of application of the exemption in the proposed rule.''

These union commenters also challenge the FAR Council's justification for the proposed exemption. In addition to the comments on telecommunications, summarized above, the AFL–CIO states that the Communications Workers of America (CWA) (one of its member unions) represent employees performing ''network integration'' services for several large companies, and that these firms would be at a disadvantage in bidding for government contracts under the proposed exemption. They also state that the International Brotherhood of Teamsters (IBT) perform ''a multitude of very technical work with regard to data collection and distribution for the Department of Defense'' in Alaska. LIUNA states that the FAR Council stated that the Government ''is contracting for more and more information (IT) services * * * [but n]owhere has the FAR Council stated that it cannot obtain these services or that there are actual instances where this has occurred.'' The union commenters also state that the proposed ADP exemption is contrary to Congressional intent, as expressed in the 1976 amendments to the SCA, to comprehensively cover white collar service workers.

Based upon the comments, it is clear that all parties—those in favor of the proposal as well as those opposed—view the combined expansion of the current ADP exemption and the addition of ADP and telecommunication

services to the proposed additional list of exempt services as an intent to exempt virtually the entire ADP, IT and telecommunications industry. While the Department still believes that the additional criteria would limit the proposed exemption to a smaller set of contracts than those apparently envisioned by the commenters, the Department also recognizes that the scope of the new ADP and telecommunications exemption is broadly defined. Compared with the other exemptions proposed, the proposed ADP exemption is not as tightly focused on an area where the Government has been having trouble obtaining bidders. In light of the comments and representations challenging the need for a broad-based ADP and telecommunications exemption, the Department has concluded that the record does not adequately demonstrate that the statutory requirements for exemption have been met for this broad classification of ADP and telecommunication services. If at some future time the FAR Council or an individual agency can demonstrate that the statutory requirements for exemption are met for a more specific type of ADP or telecommunications service, then the Department will consider such a request based upon the facts applicable to that specific type of procurement or specific service.

b. Automotive or other vehicle maintenance services. Federal agencies that maintain a fleet of automobiles have a need for services such as normal maintenance (*e.g.,* changing oil and filters, rotating tires, etc.), mechanical repairs, paint and body work, glass replacement, and other repairs needed to maintain the automobile or other vehicle. Unless the agency has a dedicated Government facility for such work, it is contracted out to commercial firms. The FAR Council stated that the General Services Administration (GSA), which is responsible for providing Interagency Fleet Management Services, has been unsuccessful in contracting for these services because of the unwillingness of commercial sources to deal with Government unique requirements such as the Service Contract Act for the small amount of Government work involved. As a result, GSA and other agencies often acquire these services on an as needed basis using micro-purchase procedures and the Government Purchase Card. The FAR Council stated that unless GSA and other agencies can more closely align the Government's contracting practices and requirements with commercial practice, it will not be able to generate enough interest or business to permit the Federal Government to take advantage of the quality improvements and lower prices that will likely result from establishing contractual relationships with commercial service centers. While the individual transactions are small (typically under $2,500), the aggregate volume and dollar value of transactions across the nation is substantial. The Federal Government would benefit from the lower prices it can negotiate for parts and supplies used to service vehicles if it were able to contract for services rather than treat each transaction individually. Additionally, the Federal Government could expect to receive better service because it will be viewed as a ''corporate'' customer who gives its business to a particular contractor(s) in a certain location. The FAR Council stated that an exemption is necessary to permit the Government to enhance the quality of service while reducing its cost through leveraging the Federal Government's collective buying power.

The FAR Council provided the following specific example: The Department of Interior's Office of Aircraft Services in Boise, ID, contracts for maintenance of about 100 of its own aircraft and also provides contract support for other agencies such as the U.S. Forest Service. The Office of Aircraft Services reports that it has about a dozen contracts at various locations around the country. These are commercial services procured from commercial sources where the maintenance of Government aircraft is performed alongside regular non-government aircraft. Contractors' work is predominantly non-government. Some commercial contractors have refused to do work for the Government because of concerns with the SCA requirements. The result has been limited competition for such contracts.

Only a few comments were received regarding this service, and none of those comments provide any detailed information. The AFL–CIO states that contractors supplying ''automotive and other vehicle maintenance services to the government often subcontract these services, and members of IBT perform this work for both prime contractors and subcontractors and enjoy SCA protection. An exemption for this work risks a loss of that protection, particularly under fixed price contracts where there may be an incentive to cut employment costs.'' This comment, however, does not address the limiting effect that the application of the required criteria will have on the application of the exemption to these services. As noted in the proposal, the exemption would not apply to contracts for the operation of a Government motor pool or similar facility. Further, the exemption would not apply where the volume of the government work is such that the contractor could perform the work with a workforce dedicated to the government contract. As noted in the FAR Council's request, GSA and other government agencies often acquire these services on an as needed basis using micro-purchase procedures and the Government Purchase Card. Thus, in many cases the services that would be covered by this exemption are not now subject to the prevailing wage requirements of SCA, and in these cases the exemption would not result in loss of SCA protection for employees currently working on SCA covered contracts. Furthermore, under the criteria discussed below, the exemption would not be available unless price is equal to or less important than the combination of other non-price or cost factors in selecting the contractor. Therefore, the Department has concluded that the statutory requirements for exemption are met for this narrow vehicle maintenance service category.

c. Financial services. Increasingly, the Government is contracting for and using the services of financial institutions that provide credit, debit, or purchase cards. These cards are used by Federal employees while traveling or to make small purchases for commercial items to meet the day-to-day needs of their organizations. The providers of these services use the financial networks of firms like VISA, MASTERCARD, and American Express to provide the services. The FAR Council stated that while the Federal Government's use of these services is significant, it represents a small fraction of the transactions that flow through the financial infrastructure. Transactions flowing through the networks are processed in the same fashion and by the same workforce regardless of the ultimate user of the cards. As a result, the FAR Council stated that it is very difficult to get competition for these services when the Federal Government imposes unique requirements on the contractors. It stated that contractors will not change their way of doing business to accommodate a customer that represents a small portion of their business; it is impossible for them to segregate what is done for the Federal Government from commercial activity.

None of the comments specifically opposes this category of services. Therefore, based upon the FAR Council's recommendation, this

exemption for financial services meeting the specified criteria is adopted.

d. Lodging at hotels/motels. Agencies of the Federal Government often contract with hotels/motels for meeting rooms for conferences of limited duration (*e.g.,* one to five days). These contracts may be for conferences where attendance is limited to Government employees or may involve attendance by other organizations and/or the public. These contracts may also involve furnishing lodging and meals to those participating in the conference. In other cases, agencies establish contractual arrangements with hotels/motels to obtain special rates for lodging when the agency has a large number of employees that frequently travel to a particular location. The hotel/motel agrees to special reduced rates in exchange for being designated a preferred provider for the agency travelers to that city/location. In both of these cases, the FAR Council stated that hotels/motels are unwilling to agree to contract with the Government when it would mean they would have to pay different rates to employees as a result of a Service Contract Act wage determination or would have to keep special/different payroll or other records. Typically these contracts are for relatively small dollar amounts (less than $25,000). The FAR Council stated that this severely limits the Governments ability to contract for these services when needed.

Several union commenters oppose the inclusion of this service category. The Hotel Employees and Restaurant Employees International Union (HERE) state that this exemption ''clearly disadvantages hotels/motels which are unionized or paying prevailing wages as compared to the status quo existing under the SCA.'' HERE states that if ''certain hotels/motels are unwilling to contract with the Government, the Government can simply contract with unionized hotels/motels, which * * * will have no problem fulfilling the requirements of the SCA without paying different rates to employees just for Government events.'' HERE's comments also focus on the prevailing fringe benefit requirements of SCA, and it notes that maintaining the level of benefits is particularly important in a low-wage industry such as the hotel/motel industry. HERE also states that there is no justification for eliminating the protections of section 4(c), which it considers an ''integral aspect of the SCA's attempt to protect prevailing wages and fringe benefits.'' The AFL–CIO makes very similar comments regarding this service category, and points out that the FAR Council does not assert that it has been unable to contract for its required services, but just that ''certain hotels/motels'' have refused to enter into contracts.

The Department has considered these comments within the context of the types of lodging services outlined in the proposal. With respect to conferences, the Government does not always contract for these services in the same manner. In some cases, the Government may simply have the hotel/motel hold a block of rooms for conference participants. The rooms are then reserved and paid for by the participants. In these situations the Government may also reserve and pay for meeting rooms. In other cases, especially if the conference participants are all from the same agency and the number of participants is known, the agency may award a contract not only for meeting rooms but also for lodging. In the first situation, the contract is typically less than $2500 and SCA prevailing wage requirements would not be applicable; however, in the latter situation SCA would apply. Under the proposal, both types of contracts would be treated the same and neither would be covered by SCA where the regulatory criteria are met.

The Department is sympathetic to the issues raised by the union commenters, especially their comments relative to fringe benefits. However, as the above examples demonstrate, even if this proposal were not adopted, SCA still would not apply to a large number of Government meetings and conferences at private hotels/motels. Furthermore, while the comments regarding the availability of union hotels/motels willing to accept the application of SCA might be true in large cities with a substantial number of union establishments, that scenario might not always be the case for meetings in smaller metropolitan or nonmetropolitan areas. While government meetings and conferences may be frequent in cities such as Washington, DC, they would not be frequent in small metropolitan areas. As HERE acknowledges, hotels/motels are not likely to change their pay practices simply to attract Government conferences or meetings.

With respect to other types of lodging contracts, these are ordinarily long-term contracts where the Government has a continuing need for a block of rooms, *e.g.,* lodging for military recruits or government employees attending training at an agency training center, and the agency enters into a contract with a hotel/motel for number of rooms over a longer period of time. The application of SCA to this type of contract is more direct, and determining compliance with SCA is simpler. Unlike conferences or meetings that are one-time contracts, these lodging contracts fulfill a continuing lodging need. Furthermore, contrary to the comments of HERE, section 4(c) provisions would apply to options, and to renewals for services currently subject to section 4(c).

Based upon the foregoing, the Department has determined that it will revise the proposed exemption for lodging services and apply the exemption only to contracts for meetings or conferences. Contracts for a block of rooms on a continuing basis would be outside the scope of the exemption. As already noted, the application of SCA to contracts with hotels/motels for conferences currently varies depending upon the form of the contract. Further, it is the Department's view that the application or non-application of SCA to these contracts does not impact the remedial purpose of the Act to protect prevailing labor standards. On the other hand, contracts for a block of rooms on a continuing basis are different. Regardless of their form, these contracts should all be subject to SCA at the present time, and the record does not provide adequate support for extending the exemption to this type of lodging contract.

e. Maintenance services for all types of specialized building or facility equipment. Agencies that operate and maintain Government owned and/or operated buildings often contract for operation and maintenance of the building or facility and the prime contractor will then typically subcontract for services related to specialized equipment. In other cases, the Government will contract directly for the maintenance and servicing of such equipment. In either case, the FAR Council reported that it is very difficult to acquire the quality of service needed from contractors who are not authorized representatives of the manufacturer and therefore do not have access to parts needed for repairs and training that is essentially only available from the original equipment manufacturer. While there may be other contractors who indicate they have the capability to provide the service, the FAR Council states that experience often shows that the quality of service obtained from such sources is not satisfactory. The FAR Council stated that the Government, as a result of the reluctance of some of the best contractors to accept Government unique requirements such as those related to the Service Contract Act, is deprived of the opportunity to improve the quality of service for the

maintenance and servicing of critical building equipment and systems.

The Mechanical Contractors Association of America (MCAA), AFL–CIO, LIUNA, International Union of Elevator Constructors (IUEC), United Association of Journeymen and Apprentices of the Plumbing and Pipe Fitting Industry of the United States and Canada (UA), International Union of Operating Engineers (IUOE), and Building Trades all strongly oppose the proposed exemption for this category. Although the comments all provide slightly different individual perspectives, the thrust of these comments is similar: (1) qualified contractors and employees can and do perform these services with the application of SCA; and (2) this exemption would have a negative impact upon workers currently covered by SCA.

Several commenters challenge the FAR Council statement that the exemption is needed because ''some of the best contractors'' are reluctant to accept government unique requirements such as SCA. MCAA—a mechanical construction industry trade association with about 2,000 member firms—states that its member firms compete for federal agency building systems contracts that are the subject of the NPRM. It also asserts that alternate procurement and contracting planning would be a better way to address any problems with lack of offerors or diminished contracting leverage. MCAA states that ''[c]ompetent firms will compete for federal contract opportunities when those contracts are fairly awarded and administered and are performed with high business and labor standards applied to all contractors.'' The AFL–CIO, and others contend that the ''best'' contractors do not have a problem paying prevailing wages, and this exemption would ''attract lower quality contractors that pay lower wages, hire less skilled and less productive employees and perform less well.'' Several commenters note that the proposed exemption would encourage agencies to replace on-site stationary engineers employed by SCA covered contractors with employees assigned to a number of buildings on a service route. To the extent that a legitimate problem exists, the commenters contend that it is not caused by the application of SCA and the FAR Council should seek other solutions. The IUOE stated that it has 120,000 members who are stationary engineers employed in the field of operations and maintenance of mechanical, electrical, electronic and plumbing systems, including computer-operated HVAC systems and/or automated building control systems, fire life safety systems, elevators, and escalators. The IUOE expressed its concern that the proposed rule would have the potential to replace more highly skilled stationary engineers in Government facilities with entry level workers. They also state that there are very few HVAC applications where ''a manufacturer or original equipment supplier can validate that only their mechanics or technicians can properly service the equipment in question. If that were true, the commercial facilities that exist in the United States would not be able to function without constant interaction and a mandatory lifetime service agreement from the manufacturer.'' The IUEC notes that the proposed exemption does not ''make any sense'' in the context of the elevator industry. The IUEC states that ''in the elevator industry, the lead, national manufacturing companies * * * are all signatory to collective bargaining agreements with the IUEC under which they are obligated to pay contractual rates that are tantamount to prevailing wages. Thus, if there is in fact reluctance on the part of these manufacturers to bid on federal maintenance, it is not because they do not want to pay prevailing wages, because they are doing that already.''

Based upon the comments, the record does not support the conclusion that the statutory requirements for exemption are met, and this category of service will be deleted from the final rule. It is evident that this work is currently performed under SCA contracts. Furthermore, as discussed below, if the Government needs to contract only with the original manufacturer or supplier, that exemption remains available.

f. Installation, maintenance, calibration or repair services for all types of equipment where services are obtained from the equipment manufacturer or supplier of the equipment. Agencies acquire a wide range of equipment and often have a need to acquire services to install, maintain, calibrate, service or repair the equipment from the manufacturer or original supplier in order to avoid compromising a warranty or because proprietary information needed to perform the work is only available from the manufacturer, an authorized representative of the manufacturer or the supplier of the equipment. Typically, these contracts involve sophisticated equipment that requires access to proprietary information or requires employees involved in performing the work to have extensive training that is often only available through the manufacturer or equipment supplier. In such cases, the Government's need to contract with a particular source or a limited number of sources must be properly justified and approved, if applicable, under the statutory competition requirements outlined in 48 CFR part 6 of the Federal Acquisition Regulation. Examples of the types of equipment include automated building control systems, HVAC equipment, building security systems, and elevators or escalators. The FAR Council reported that in many of these cases, the Government has limited leverage to negotiate with the contractor to accept Government unique requirements such as those related to the Service Contract Act and has had great difficulty obtaining services from commercial sources who are unwilling to accommodate such requirements.

The commenters that oppose the exemption for specialized building or facility equipment also oppose the exemption for other equipment services obtained from the manufacturer of supplier of the equipment. Many of their comments apply equally to both service categories. For example, IUEC notes that the major elevator manufacturers are already paying prevailing wages pursuant to their collective bargaining agreements. Therefore, any reluctance to contract with the Government on the part of these companies should not be caused by a concern with the SCA.

The Department believes, however, that there is an important difference between the proposed exemptions. While the services for specialized building or facility equipment could be performed by the manufacturer or supplier of the equipment, the services relative to this category must be performed by the manufacturer or supplier. Further, this exemption was not intended to provide an exemption for the manufacturer or supplier when they are competing with other service providers, but to limit the exemption to situations where the manufacturer or supplier is the only source for the services. In a sole source situation, as set forth in the FAR at 48 CFR 6302–1, other contractors are not disadvantaged because there are not other contractors available to perform the services. Therefore the Department believes that the statutory requirements for exemption are met for this narrow sole source exemption. The Department notes that the sole source aspect of this exemption was discussed in the preamble, but was not set forth in the regulatory language. The regulatory language of the final rule has been clarified to specify that the exemption

shall only apply when the contract is awarded on a sole source basis.

g. Transportation of persons by air, motor vehicle, rail, or marine on regularly scheduled routes or via standard commercial services (not including charter services) The General Services Administration (GSA) enters into contracts with airlines called ''City Pairs'' so that Federal employees traveling on Government business can get discount air fares.

Under these contracts, Federal employees typically obtain tickets through travel management contracts awarded by GSA or other agencies and the Federal employee travels on regularly scheduled routes of commercial airlines but receive tickets at a substantial discount. While the Federal Government's use of these services is significant, it represents a small fraction of the transactions that flow through the airlines. Tickets that are issued to Federal travelers flow through the same networks and are processed in the same fashion as other travelers. As a result, the FAR Council reported that it is very difficult to get competition for these services if the Federal Government imposes unique requirements like those in the Service Contract Act on the contractors. The airlines will not change their way of doing business to accommodate a customer that represents a small portion of their business. It is impossible for them to segregate what is done for the Federal Government from commercial activity. The Federal Government also enters into similar contracts for the carriage of passengers by other modes of transportation.

The AFL–CIO and LIUNA both oppose this exemption. The AFL–CIO states that ''[m]any IBT members work in the industries covered by this proposed exemption. The FAR Council's rationale for this exemption is unpersuasive and it could have a serious detrimental impact on service workers.'' LIUNA comments that the ''FAR Council nowhere states that it cannot obtain these services or that any contractor has refused to bid in these categories of services.''

The proposed exemption mirrors an exemption for the carriage of mail that was granted prior to the 1972 amendments to SCA. The exemption was necessary because mail is not considered to be freight and the transportation of mail did not fall within the scope of the transportation exemption in section 7(3) of SCA. Because the exemption for the carriage of mail was granted prior to the 1972 amendments, it was not accompanied by a finding that the exemption was in accord with the remedial purpose of the Act to protect prevailing labor standards. Nevertheless, the Department is not aware of any instance where the exemption for the transportation of mail has adversely impacted prevailing labor standards.

The exemption for the transportation of persons is necessary at this time because of deregulation in the transportation industry. When the ''City Pairs'' contracts were first awarded, these contracts fell within the scope of the transportation exemption in section 7(3). With deregulation, it is not clear that ''City Pair'' fares still constitute published tariffs. Since SCA has not been applied to these contracts previously, the Department has concluded that the exemption would not have a detrimental impact on service workers. In addition, the Department has concluded that the application of SCA to these contracts would seriously impair government business and would likely cause the contracts to be discontinued. Therefore, the statutory requirements for exemption are met for these transportation services. The Department wishes to emphasize that this exemption is narrow, extending only to common carriers providing the services in question to the general public, as well as the Government. It does not extend to charter services, where the Government contracts with a carrier to provide the service just to the Government, such as shuttle buses between Government buildings. The wording of the proposal has been clarified in the final rule.

h. Real estate services. Federal agencies involved in acquiring and disposing of real property often contract for real estate services, including lease acquisition, real property appraisal, broker, space planning, lease re-negotiation, tax abatement, and real property disposal services. The primary classes of workers that are involved in performing the work are appraisers, leasing specialists, brokers, space planners, interior designers, fire safety engineers, and project managers. In many cases, the employees are required by contracts with the Government to be licensed. In many cases, the Department of Labor has not established wage determinations that apply to these classes of workers. The individual requirements are typically relatively low dollar value (under $25,000) and require that services be performed in a variety of different geographic locations. Knowledge of the local real estate market is required to perform the services effectively. Therefore, individual employees, particularly in rural areas, spend only a small fraction of their time working on Government contracts.

While the Federal Government's use of these services is significant, it represents a small fraction of the transactions that flow through the industry/commercial sources. As a result, the FAR Council reported that it is very difficult to get competition for these services where the Federal Government imposes unique requirements like those in the Service Contract Act on the contractors. The contractors will not change their way of doing business to accommodate a customer that represents a small portion of their business. The FAR Council stated that as the Government continues to downsize, it must rely more and more on commercial sources for these services and it is critical that the Federal Government has access to well-qualified sources of supply for these types of services.

LIUNA opposed this exemption simply by commenting that the ''FAR Council nowhere states that it cannot obtain these services or that any contractor has refused to bid in these categories of services.'' No other comments were directed specifically at this service category. While LIUNA is correct that the FAR Council did not state that contractors had ''refused to bid,'' the FAR Council did report that it is very difficult to get competition for these services. The Department does not believe that LIUNA's comment, unsupported by factual statements as to how the work is currently done or as to how the Government could obtain the services, is of sufficient weight to counter the FAR Council's representations. Therefore the exemption for real estate services is retained in the final rule.

i. Relocation services. Employee relocation services are available for Federal employees or military personnel and their families being transferred to new duty stations anywhere within the continental United States and Puerto Rico. These contracts offer a multitude of flexible services to customize a solution that best meets the employee's needs. The contracts save time and money and reduce stress by offering Federal employees and military these services: Home marketing assistance, home sales services, destination area services, management reporting services, mortgage counseling, property management services, and other related services. The individual requirements are typically relatively low dollar value (under $25,000) and require that services be performed in a variety of different geographic locations.

Knowledge of the local real estate market is required to perform the services effectively. Therefore, individual employees, particularly in rural areas, spend a fraction of their time working on Government contracts.

While the Federal Government's use of these services is significant, the FAR Council stated that it represents a small fraction of the transactions that flow through the industry/commercial sources. As a result, it is very difficult to get competition for these services if the Federal Government imposes unique requirements like those in the Service Contract Act on the contractors. The contractors will not change their way of doing business to accommodate a customer that represents a small portion of their business. The FAR Council stated that it is in the Government's interest to maximize the availability of these services to its personnel; accordingly it is detrimental to the Government's interests when it is unable to attract commercial sources as providers of these services.

LIUNA opposed this exemption with the same comments that it made relative to real estate services. In this case also, although the FAR Council did not state that contractors had ''refused to bid,'' the FAR Council did report that it is very difficult to get competition for these services. LIUNA's comment is not sufficient to change the Department's preliminary conclusion in the NPRM that the statutory criteria for exemption have been met.

The American Moving and Storage Association (AMSA) supported the proposed exemption and stated that the term ''relocation services'' should be clarified to specifically include moving and storage services. AMSA states that its members have ''usually performed their services pursuant to FAR-exempt rate tenders rather than contracts. Formerly, the rates contained in tenders were predicated upon published tariff rates that were also filed with the Interstate Commerce Commission. Today, the rates and charges offered for Federal Government service are contained in published tariffs that must be available for inspection * * * but are not filed with a Federal regulatory agency although the tariffs are filed with contracting Government Agencies.'' AMSA notes that the Department of Defense has recently replaced rate tenders with contracts subject to SCA for several test relocation programs. AMSA analyzes moving and storage services to demonstrate how these services meet all of the proposed exemption criteria.

The application of the SCA section 7(3) exemption for transportation services is not the subject to this rulemaking. That exemption is explained in § 4.118 and the Department has not proposed any change to that section. As indicated in that section, the section 7(3) exemption has only had application to services performed under rate tenders. Even before deregulation, DOD agencies had numerous contracts for moving and storage services that have always been subject to SCA. Since deregulation, it is the Department's experience that even those previously exempt tender services are now performed pursuant to contracts subject to SCA, rather than by tender agreement, as evidenced by the DOD test relocation contracts noted in the AMSA comments.

When the Department proposed the exemption for relocation services, it never considered moving and storage services within the scope of the proposed exemption. None of the services listed in the preamble to the proposed rule—home marketing assistance, home sales services, destination area services, management reporting services, mortgage counseling, or property management services—is similar to moving and storage services. If the Department intended moving and storage to be included within the scope of this exemption, it certainly would have listed moving and storage services and not have included this dominant aspect of the relocation within the catch-all phrase ''other related services.''

Based upon the comments and the recommendation of the FAR Council, the Department has concluded that the statutory requirements for exemption are met for the relocation services described in the proposal. The final rule will be clarified, however, to indicate clearly that moving and storage services are not within the scope of this exemption.

j. Other Services. The preamble to the proposal specifically solicited comments regarding the listed services and asked whether other services should be added to that list. The Department indicated that if sufficient justification were received for any additional service, it would issue a new proposal to add the new service. As noted in the discussion of relocation services AMSA submitted comments recommending that the definition of relocation services be clarified to specifically indicate that moving and storage services would fall within the scope of that exemption. As discussed above, the Department never intended moving and storage services to be a part of relocation services and has not adopted that recommendation. The Department believes that the AMSA comment is more appropriately considered as a recommendation for the addition of a new service to the list. In that regard, while AMSA has submitted comments to show how moving and storage services typically meet the proposed criteria, it has not demonstrated that such an exemption is ''necessary and proper in the public interest or to avoid the serious impairment of government business, and is in accord with the remedial purpose of [the] Act to protect prevailing labor standards.'' Accordingly, the Department is not issuing a new proposal at this time to add moving and storage services to the list of exempt services.

CODSIA and CSA both comment that the criteria should be applied to all commercial services and should not be limited to those services listed in the proposal. CODSIA and CSA specifically identify trash pickup, pest control, and childcare as services for which an exemption would be appropriate. As with AMSA's comments regarding moving and storage services, however, CODSIA and CSA have not provided a more specific justification to demonstrate that their recommended expansion of the list of services (to either all commercial services or the three specified additional services) meets the statutory requirements for exemption, and the Department is not issuing a new proposal at this time to add these services to the list.

Finally, a clarifying revision has been made to the introductory language to the list of exempt services to make it clear that the contract must be principally for the listed service in order to be exempt.

2. Proposed Criteria

As explained above, the listed services would only be exempt if specified criteria were satisfied. The recommended criteria were intended to limit the exemption to those procurements where the services being procured are such that it would be more efficient and practical for an offeror to perform the services with a workforce that is not primarily assigned to the performance of government work. Thus, contracts for base support services where the work is performed by an on-site dedicated workforce would not meet the exemption criteria. Similarly, contracts where the services have been performed by a dedicated group of federal employees (A–76 procurements) would be unlikely to meet the exemption criterion that the workers perform only a small part of their time on the contract; however, the NPRM explained that it is possible that some

subcontracts for a portion of those services might meet the criteria for exemption.

The criteria were designed to ensure that the remedial purpose of the Act to protect prevailing labor standards is preserved. This would be accomplished in two ways. First, the proposed exemption would apply only when the contract award is not determined primarily upon the factor of cost. Therefore, the contractor providing the best service at a somewhat higher cost would not be at a competitive disadvantage. Second, the criteria would limit the application of the exemption to circumstances where the nature of the procurement dictates that the most efficient and practical performance of the workload can be accomplished with a workforce that is not dedicated to working primarily on the Government contract. Thus, the competitive pressures upon employee wages that might exist if the services were performed by a workforce dedicated to the Government contract would not come into play on the contracts within the scope of the recommended exemption. Furthermore, even if a contractor might be inclined use a dedicated workforce or to reduce wages to secure the Government contract, the criteria would forbid that practice.

Several comments were received regarding the proposed criteria for exemption. These comments will be organized and analyzed based upon each individual criterion.

(1) *The services are commercial services.* The NPRM explained that a basic underlying purpose of the proposed exemption was to permit a prospective contractor to utilize its commercial compensation practices for both Government and private commercial work. If the prospective contractor does not currently perform the solicited services, then conforming to the SCA requirements would not cause the contractor to alter its commercial compensation practices.

The AFL-CIO commented that this criterion is easily met, covering virtually all commercial contractors that do not exclusively rely upon government contracts. CODSIA commented, ''if the contracting officer is using FAR part 12, then presumption should exist that the service being solicited will be COMMERCIAL.'' CSA made comments similar to CODSIA's.

This criterion was not intended to be limiting to any considerable extent. This criterion is intended only to distinguish services that are unique or specially adapted for the government contract from those that are not provided in the commercial marketplace. The Department agrees that services of the type described in paragraph (f) of the definition of ''commercial item'' at FAR 2.101 would meet the requirements of this criterion; however, other aspects of the definition of ''commercial item'' in FAR 2.101 are not fully consistent with all aspects of this proposed exemption. Also, the definition in FAR 2.101 may change in the future. Therefore, the Department has not included any reference to FAR parts 2, 10, or 12 in the commercial service criterion, and the final rule retains the language in the proposal for this criterion.

(2) The prime or subcontract will be awarded on a sole source basis or primarily upon factors other than cost. One of the basic purposes of the Service Contract Act is to counteract the negative impact that competition based on price alone may have upon wages. If a contract is awarded on a sole source basis, there is no competition and price is clearly not the basis for awarding the contract. For the majority of other contracts that are competitively awarded, this criterion would attempt to largely remove wages from consideration by making quality of service and other non-cost factors equal to or more important than the bottom-line price. If one assumes that the best employees (contractors) are paid (pay) higher wages, then this criterion would allow these employees (contractors) to compete on the basis of the employees' increased productivity and higher quality service. These employees/contractors should not be disadvantaged even though the employee wages and possibly the resulting contract price are somewhat higher than the lowest offer.

The AFL–CIO comments that ''[e]ven in best value contracting, price will always play a critical and often decisive role. . . If the Government truly wished to obtain the best quality services at the best cost, the better approach is for agencies to fully maintain SCA rates, and then use best value contracting to hire the most qualified contractors that offer the best price.''

This criterion is not intended to imply that all best value contracts should be exempt from SCA. In fact, the opposite is true and most best value service contracts will remain subject to SCA. This criterion is intended to operate in conjunction with all of the other criteria, and help to ensure that prevailing wage and benefit rates are not adversely affected by the application of this exemption. This criterion is retained without change in the final rule.

(3) The services are furnished at catalogue or market prices. This criterion was designed to ensure that the contractor will provide the services to the Government on the same basis that the contractor services commercial accounts. Combined with the other criteria, this requirement should ensure that contractors do not decrease employee compensation as a part of the competitive contracting process.

The AFL–CIO commented that this criterion differs from § 4.123(e)(1)(ii)(B) because it contemplates that market price information could also be established by surveying firms in a particular industry or market. This additional sentence in the criterion applicable to the new services was not intended to imply that the market price would or could be determined in a manner different from the determination of market price under § 4.123(e)(1)(ii)(B). To avoid any confusion, however, this additional sentence will be deleted from the criterion in the final rule, and this criterion will be consistent with the language currently used in § 4.123(e)(1)(ii)(B).

(4) The service employees performing the exempt services will spend only a small portion of their time (a monthly average of less than 20%) servicing the government contract. The NPRM explained that if the employees spend only a small portion of their available work hours on the Government contract, the contractor would not likely be willing to alter its compensation practices simply to obtain the Government contract. (Note: Criterion 5 would also specifically preclude any such change in compensation practices.) Furthermore, the criteria for exemption would not be satisfied by rotating the workforce and having different employees work on the contract each day of the week. In the Department's experience it would be extraordinary for a contractor to staff a contract in this manner. Therefore in such a case, although each individual employee would spend less than 20% of his/her work hours on the Government contract, a contracting officer or prime contractor (in the case of a subcontract) could not certify—as required by Criterion 6—that all or nearly all offerors would staff the contract with service employees who spend only a small portion of their time on the project.

This criterion generated considerable comment on both sides of the issue. CODSIA and CSA both strongly oppose any type of hours restriction whatsoever. CODSIA notes that several of the proposed criteria have their foundation in the current ADP exemption, but it states that ''the Department has effectively eviscerated

the previous foundation by adding a new qualification that requires a potential commercial subcontractor to perform the work without being able to dedicate the company's workforce in excess of more that 20% of the service worker's annualized hours to the government contract.'' CODSIA further states that ''no commercial company would execute a government subcontract with the understanding (and obligation) that its service workers cannot be dedicated to the subcontract until completion . . . [t]herefore, no prudent company will seek to meet this qualification and the SCA will apply.'' CODSIA concludes that ''SCA wages should not be superimposed upon the commercial market place due to an artificial, ill-founded criterion,'' and ''the workforce requirement should be eliminated.''

CSA makes many of the same comments as CODSIA but focuses those comments on the application of the criterion to subcontracts. CSA also states ''no commercial service subcontractor will contract under an obligation that clearly impairs the efficient performance of its work.'' CSA concludes that ''the 20% limitation should be eliminated for commercial service subcontractors.''

On the other side of the issue, several union commenters take the position that the 20% criterion should be more limiting. The AFL–CIO comments that under the proposed rule a service contract worker could spend virtually all of his or her time performing work that has been covered by SCA, but receive no SCA protection. ''[I]f a contractor had numerous service contracts with one or more government agencies, and no employee spent more that 19.9 percent of his or her time on any one contract, the contractor could be exempt from the SCA even if one or more of its employees spent 99 percent of his or her time on five separate contracts, taken together.'' The AFL–CIO states that this criterion ''would encourage bid splitting by government agencies and contractors to avoid SCA coverage.'' Therefore, it recommends that § 4.123(e)(2)(ii)(D) require that ''contractors treat the total time spent on government contracts or subcontracts cumulatively in calculating employee time allocated to government contract work.'' Also, ''[t]o further ensure that contractors perform a significant amount of government contract work remain subject to the SCA,'' AFL–CIO recommends that ''the Department should also place a cap on the total amount of time a contractor can devote to government contracts and still be eligible for the exemption.'' AFL–CIO suggests five percent as a reasonable level. Finally, the AFL–CIO states that ''[w]ithout recordkeeping requirements, the contractor itself may not know if any employee works a monthly average of more than 20 percent of available hours on an annualized basis on a government contract or subcontract.'' ''To address the exemptions' failure to include recordkeeping requirements,'' the AFL–CIO suggests that ''the regulation define a 'small portion' of a worker's time as 'no more than 20 percent in any one month.' ''

The Department believes that these comments overlook the primary purpose of this criterion. The criterion is not designed to dictate how the contractor manages its workforce, but rather to describe the nature of the services being procured. The proposed criteria are designed to complement each other and to work as a whole. Therefore, each individual criterion must be evaluated within the context of the whole. In evaluating this criterion, therefore, it is important to remember that a subsequent criterion requires that the contracting officer (or the prime contractor in the case of a subcontract) determine in advance that all or nearly all of the prospective contractors will meet the criteria. Therefore, the 20 percent criterion should primarily serve as a guide for the contracting officer in evaluating the services to be procured. A hypothetical example might illustrate this point better. An agency is contracting for routine maintenance on a fleet of automobiles. The fleet is large enough that the agency expects to have at least five cars in the shop at all times. In this example, a contractor could clearly perform the government work with a dedicated workforce. Because it is therefore highly unlikely that all or nearly all the bidders would perform the contract in a way that would meet this criterion, the contracting officer would make the determination that the exemption would not apply to this procurement. The fact that a large repair shop could divide the work and ensure that none of its mechanics spends more than 20 percent of his or her time (on an annualized monthly basis) servicing the government vehicles would not alter the determination that SCA applies to this contract. An example of an exempt vehicle maintenance contract would be one where the government's fleet is relatively small or dispersed so that it is not likely that more than one or two vehicles per month will be serviced by one facility. In this case, the mechanics for all or nearly all of the offerors would clearly spend less than 20 percent of their time servicing the government vehicles. The contractor's certification that its employees will not spend more than 20 percent of their time servicing the government vehicles is largely a confirmation that the contracting officer's evaluation of the nature of the contract work was correct.

Because the contracting officer should have already determined that all or nearly all offerors would meet this criterion, no contractor should be required to restructure its workforce to comply with the 20 percent limitation. Furthermore, the limitation requires employees to spend no more than 20 percent of their hours on the contract on an annualized basis, thereby permitting longer hours where required by the interim exigencies of the contract or to accommodate short-term workforce fluctuations. Therefore, the underlying basis for the CODSIA and CSA recommendation to delete this criterion should not exist. If a contractor could perform the services with a dedicated workforce, then the contracting officer should not consider the exemption to be applicable.

Further, with respect to the AFL–CIO's recommendation that the 20 percent limitation be based upon all government work and not just the contract in question, this is a question for which the contracting office would not have direct knowledge, and is something that would change from one contractor to the next. If the AFL–CIO's recommendation were adopted, one company might be exempt because it only had one government contract whereas another would be subject to SCA because it had numerous contracts. This would convert the determination on application of the exemption from one based upon the overall requirements of the contract to a determination based upon the individual contractor's workforce utilization. The Department does not intend this exemption to permit the situation where an exempt contractor would compete against a nonexempt contractor, and we have not adopted the AFL–CIO recommendation. Similarly, we have not adopted the AFL–CIO recommendation to limit the overall amount of Government work that an exempt contractor would be allowed to perform.

Finally, the Department has not adopted the AFL–CIO's recommendation to apply the 20 percent limitation on a month-by-month basis rather than an annualized monthly average. As already explained, this criterion was established primarily to describe the nature of the exempt services. In the automotive maintenance example described previously, the

Department does not believe that the exemption should be denied simply because in one month the agency's entire fleet of twenty vehicles needs servicing and for the remainder of the year no more than one car per month is in the shop. While the contracting officer should have informed knowledge about the amount of work anticipated over a normal year period, the contracting officer may not always be able to predict when repairs will be needed. The application of the exemption should not be impacted by unexpected fluctuations in service needs as long as the overall nature of the contract is not changed. Accordingly, the Department has not changed this annualized monthly average concept.

The criterion is adopted with a minor wording change to make it clear that the 20% limitation applies on an employee-by-employee basis, rather than an average of all of the employees working on the contract.

(5) The contractor utilizes the same compensation plan for both contract and commercial work. This criterion would ensure that the employees servicing the government contract will be compensated exactly as they would be if they were servicing a commercial account. Thus, the prevailing labor standards for private work would not be impacted in any way by the award of the Government contract. Furthermore, because contract award is not determined primarily on the basis of cost (Criterion 2), the contractor paying the lowest wages would not have a competitive advantage over other employers who pay average or above average wages. These contractors would compete for the Government work on the same basis that they compete for private work—quality of service and overall value.

The AFL–CIO and LIUNA commented that the Department improperly substituted the term ''equivalent commercial wage'' for the statutory term ''prevailing.'' The AFL–CIO recommended that this criterion be changed to require that the contractor's compensation plan be not less than the SCA wages and benefits. If this recommendation were adopted, the exemption would serve no purpose. If the contractor is already paying SCA rates then it should not matter whether SCA is applied to the contract. This comment, however, also goes to the issue of whether the exemption is ''in accord with the remedial purpose of the Act to protect prevailing labor standards.'' The Department believes that the criteria as a whole achieve this goal. If the employer does not change its pay practices to obtain the Government contract, prevailing wages should not be affected. Furthermore, an employer would be unlikely to change its pay practices in any event where no worker spends more than 20% of his or her time on the Government contract. In addition, the criteria limit the application of the exemption to situations where employee wages are not a primary factor in deciding which company is awarded the contract. Thus, the Government contract should not serve to either increase or decrease prevailing labor standards. This recommendation, therefore, is not adopted, and the criterion is retained in the final rule as proposed.

(6) The contracting officer determines in advance that all or nearly all of the offerors will meet the requirements of the criteria. This requirement was designed to ensure that all contractors compete on an equal basis, and that a contractor subject to SCA would not be forced to compete against a contractor that would be exempt from SCA. Furthermore, as noted in the discussion of Criterion 4, this requirement—which takes into consideration not only the practices of likely offerors but also the nature of the contract requirements—is a necessary safeguard to prevent individual offerors from juggling staffing patterns simply in an effort to avoid SCA coverage. This criterion also would serve to protect those employees (either contractor or Federal employees) who might currently be engaged in performing the solicited services on a full-time basis.

The AFL–CIO noted that this criterion is designed to ensure that all contractors compete on an equal basis. The AFL–CIO questions whether the criterion accomplishes this goal since it only requires that all or ''nearly all'' of the offerors meet the requirements of the other criteria. The AFL–CIO suggests that this standard be changed to require that all offerors meet the requirements.

The Department's intention is that a contracting officer would not make this determination unless he or she has a high degree of confidence that all offerors will meet the requirements. It is unlikely that any contracting officer would feel able to determine absolutely that every offeror will qualify for the exemption. The ''or nearly all'' language therefore would permit the extraordinary situation where one bidder might not qualify as exempt. Returning to the automotive maintenance example described previously, an employer with a single employee and a relatively small number of commercial customers could bid on the contract to maintain on average a few vehicles a month. With that small volume of government work, the workforce for ''nearly all'' prospective contractors would spend less than 20 percent of their time working on the contract. The single employee working for a company with relatively few commercial accounts, however, might spend more than 20 percent of his or her time performing work on the contract. While this company's offer might be rejected for other reasons (*e.g.,* the contract might require a capacity to service more than one vehicle at a time—a capacity that the two-person shop might not possess), the fact that one non-exempt contractor might bid on the contract should not negate the application of the exemption to everyone else. The Department believes that retaining some amount of flexibility in this regard is appropriate, and the criterion is retained.

The Department would like to emphasize that ''nearly all'' does not mean most or a majority. The words ''nearly all'' are intended to recognize the possibility of exceptional circumstances where an individual offeror might not meet all of the criteria. If this offeror receives the contract, of course, the contract would be subject to SCA prevailing wage requirements. On the other hand, the Department realizes that there may be circumstances where, once bids are received, the contracting officer determines that he or she was incorrect in the determination that all or nearly all bidders would meet the exemption requirements. The regulation has therefore been revised to provide that in such circumstances SCA will apply to the procurement.

(7) The exempted contractor or subcontractor certifies to the provisions of criteria (1) and (3) through (5). This criterion would provide a mechanism for addressing and correcting situations where the exemption may have been misapplied. If the Department of Labor, in its enforcement, determines that the contract is not in fact exempt, it would require that SCA stipulations be included in the contract. In the case of a subcontract, the prime contractor, who in almost all cases would have SCA stipulations already included in its contract, would be ultimately responsible for compliance with the requirements of the Act. The Department could therefore require that the SCA requirements be effective as of the date of contract award. The Department noted in the NPRM that an exempt contractor or subcontractor would not be required to keep any particular records to meet its burden of showing that the criteria are satisfied.

CODSIA and CSA both comment that this was an unauthorized certification

requirement. They note that section 4301 of the Clinger-Cohen Act of 1996 (Pub. L. 104–106) prohibits the imposition of contractor and subcontractor certification requirements in the Federal Acquisition Regulations unless the certification is required by statute or justified in writing and approved by the FAR Council and the Administrator of the Office of Federal Procurement Policy (OFPP). While CODSIA and CSA correctly identify the procedural requirements for approval of these certifications, the Department does not consider this to be a substantive deficiency since the FAR Council and the Administrator of OFPP recommended the certifications. The Department notes that no contracting officer can be expected to know whether individual contractors in fact satisfy the exemption. Therefore the Department considers certification essential to ensure that the criteria for the exemption have been met. The FAR Council has now made the required justification, and it has been approved by the Administrator of OFPP. Therefore the certification requirement is retained, and modified to make it clear that a certification by a prime contractor that it meets the criteria also constitutes a certification that if it subcontracts the services, the subcontractor in turn will meet the criteria.

CSA also ''recommends that the Department adopt the same policy that accompanies the Buy America Act (BAA) certification. Under the BAA policy, the contracting officer is permitted to accept the contractor's self-certification.'' In considering this comment the Department notes that the contracting officer or the prime contractor has already reviewed the requirements of the proposed contract/subcontract and has determined that all or nearly all of the offerors will meet the criteria. Therefore, the contracting officer or prime contractor should have no reason to question the contractor/subcontractor's certification. Accordingly, the Department has concluded that it is not necessary for the contracting officer or prime contractor to review the contractor/subcontractor's certification and this requirement has been deleted from the final rule. The fact that the requirement for review has been eliminated, however, does not mean that the contracting officer or prime contractor may not review the certification if they choose to do so, such as where they possess information which causes them to question the validity of the certification. Further, if it is determined that the certification is not correct, then the contracting officer or the prime contractor should not proceed with award of an exempt contract or subcontract. Because the contracting officer will no longer be required to review the certification in advance, the Department has also amended the regulation to delete the language applying SCA as of the date of the Department's determination. As provided in § 4.5(c)(2) of the regulations, the Department may require retroactive application of the SCA where it determines it is appropriate under the circumstances.

The AFL–CIO, while not opposing the criterion, commented that in the absence of a formal monitoring system, it is unlikely that any misapplication of the exemption would ever be identified. The Department shares the AFL–CIO's concern that this exemption not be misapplied. Certainly, the Department expects that contracting agencies and prime contractors would exercise their responsibilities to ensure that such misapplication is minimized. At the same time, the Department recognizes that mistakes may be made; however, the Department does not believe that the mere possibility of a mistake should preclude adopting an exemption that is otherwise justified. The Department will monitor allegations of abuse to determine whether future changes in this exemption are warranted.

3. Other Issues

Several commenters raised additional issues that were not specifically related or limited to a single aspect of the proposed exemptions. Those issues are addressed separately in this section.

Several union commenters, including the AFL–CIO and LIUNA, recommended that the exclusion for contracts subject to the provisions of section 4(c) of SCA be expanded to include ''resolicitations and other successor contracts for substantially the same services.'' They also recommended that this limitation be added to contracts under the current ADP exemption. The Department agrees that the regulation should be revised to make it clear that the exemption does not apply to any contract which is subject to section 4(c), as well as all options exercised and extensions of the contract. The Department does not believe, however, that there is sufficient justification to extend this limitation to all future resolicitations for substantially the same services, where the predecessor contract was not subject to section 4(c). In addition, the Department does not believe sufficient justification has been presented to add this requirement to the existing ADP exemption. This exemption has been in existence for nearly twenty years and the Department is not aware of any problems arising from the absence of this requirement.

Several union commenters recommended that the Department promulgate a new procedure under which the contracting agency is required to demonstrate in advance of issuing the solicitation that the section 4(d) requirements are satisfied for a proposed exemption of a particular contract or subcontract. This recommendation is consistent with other union comments that the contracting officers and prime contractors should not be delegated the responsibility to decide whether a contractor is exempt from SCA coverage. The purpose of the proposed exemptions, however, is to carefully describe a class of contracts where exemption from SCA is appropriate. Every day contracting officers decide whether SCA should be applied to a particular contract, and the decisions required to be made in this case are no different. The Department does not believe that case-by-case determination is necessary where, as in the instant situation, the record supports an exemption for a particular class of contracts.

4. Conclusion

For the reasons discussed above, the Department has concluded that the exemptions as set forth in this rule are necessary and proper in the public interest or to avoid serious impairment of Government business, and are in according with the remedial purpose of the Service Contract Act to protect prevailing labor standards. The list of services is narrowly tailored to include only commercial services which the Government has had difficulty in acquiring or where the Government is getting limited competition because of unique requirements imposed by the Government. The additional criteria, when viewed as a whole, are designed to ensure that the contractor will not be motivated to change its wage practices and pay less than the prevailing wage in order to obtain the Government contract, and that the Government in turn will not be motivated to award contracts to offerors who pay less than prevailing wages.

IV. Regulatory Flexibility Act

Under the Regulatory Flexibility Act, Public Law 96–354 (94 Stat. 1164; 5 U.S.C. 601 *et seq.*), Federal Agencies are required to prepare and make available for public comment and initial regulatory flexibility analysis that describes the anticipated impact of

proposed rules on small entities. The Department received no comments regarding the Regulatory Flexibility Analysis prepared for this rule.

(1) The Need for and Objectives of the Rule

This rule was made at the request of the Administrator for Federal Procurement Policy, OFPP, in her letter of May 12, 1999. The Administrator, on behalf of the FAR Council, stated that the exemption ''will further the commitment of the Administration to be more commercial-like, encourage broader participation in government procurement by companies doing business in the commercial sector, and reinforce our commitment to reduce government-unique terms and conditions from our contracts. We believe that all of this can be accomplished without compromising the purpose of the SCA to protect prevailing labor standards.'' The FAR Council developed a short list of services to which it believed an exemption should apply in the best interest of the Government and to avoid impairment to Government business.

Pursuant to section (4)(b) of SCA, the Secretary of Labor may grant reasonable exemptions to the provisions of the Act, but only in special circumstances where the ''exemption is necessary and proper in the public interest or to avoid the serious impairment of government business, and is in accord with the remedial purpose of this Act to protect prevailing labor standards.''

After a review of the comments and the representations of the FAR Council, the Department of Labor determined that the exemption, as revised based upon the public comments, will be both ''necessary and proper in the public interest'' and will also be ''in accord with the remedial purpose of th[e] Act to protect prevailing labor standards.''

(2) Summary of Significant Issues Raised by the Public Comments in Response to the Initial Regulatory Flexibility Analysis

The Department received a number of comments regarding the proposed exemptions. Those comments are discussed in detail in the preamble to this rule. The Department did not receive separate comments concerning its initial regulatory flexibility analysis.

(3) Number of Small Entities Covered Under the Rule

The definition of ''small business'' varies considerably depending upon the policy issues and circumstances under review, the industry being studied, and the measures used. The Small Business Administration's Office of Advocacy generally uses employment data as a basis for size comparisons, with firms having fewer than 100 employees or fewer than 500 employees defined as small. The types of services covered by the proposed exemptions span a variety of industries. Based upon analyses done by the U.S. Small Business Administration, Office of Advocacy, some of the industries affected by the proposed exemptions are characterized as ''large-business-dominated industries'' (*e.g.,* air transportation and business credit institutions) and others are characterized as ''small-business-dominated industries'' (*e.g.,* automotive repair and real estate).[1] Thus, at least some of the services covered by the exemption would be performed primarily by small businesses. In fact, with the exception of those contracts for financial services involving the issuance and servicing of cards, the contracts for the transportation of persons, and contracts with equipment manufacturers, it would appear that a majority of the contracts affected by the proposed exemption likely would be performed by small businesses.

It is also difficult to determine with precision the value of Federal contracts that would be affected by the exemption. Federal Procurement Data System (FPDS) compiles and reports information on approximately 500,000 annual transactions exceeding $25,000; however, as discussed above, many of the contracts covered by the exemption (*e.g.,* food and lodging contracts for conferences) are currently or would likely be less that $25,000. Also, the criteria that must be met for the specified services to be within the scope of the exemption will limit the application of the exemptions to a relatively small subset of contracts within a specific SIC code. Thus, FPDS data does not provide an accurate estimate of the contracts potentially covered by the exemption. Nevertheless, in view of the limiting criteria for the listed services, the total value of the exempt contracts should be relatively small, and it is believed that the SCA would no longer apply to only a relatively small number of contracts that currently contain SCA wage determination provisions.

(4) Reporting, Recordkeeping and Other Compliance Requirements of the Rule

The exemption does not impose any new reporting or recordkeeping requirements. Although offerors are required to certify that the criteria for exemption are met, offerors are not required to maintain records to support the certification. The certification, which can be submitted as part of the bid package, is an important element to satisfy the statutory requirement that exemptions be ''in accordance with the remedial purpose of the Act to protect prevailing labor standards.'' Contractors and subcontractors to whom the exemption applies will not be required to comply with the wage and reporting requirements of the SCA.

(5) Description of the Steps Taken To Minimize the Significant Economic Impact on Small Entities Consistent With the Objectives of the Service Contract Act

The exemption does not contain any new reporting, recordkeeping, or other compliance requirements applicable to small business. Rather, the exemption would relieve small businesses and other contractors from the requirements of the SCA on certain contracts where the contractor certifies that the requirements of the exemption have been met. Furthermore, any contractor performing on a contract within the scope of the exemption may elect to perform the contract under the requirements of SCA rather than make the necessary certifications. Because application of the exemption will have been determined in advance by the contracting officer, the Department anticipates that questions regarding proper application of the exemption will be rare. Contractors will not be required to maintain any records to support the exemption, although they may be required to furnish payroll and other existing records to the Department in the event of an investigation.

V. Executive Order 12866 and 13132; Section 202 of the Unfunded Mandates Reform Act of 1995; Small Business Regulatory Enforcement Fairness Act

This rule is being treated as a ''significant regulatory action'' within the meaning of Executive Order 12866 because of the significant impact of this rule on other agencies. Therefore, the Office of Management and Budget has reviewed the rule. However, the Department concurs with the view of the Federal Acquisition Regulatory Council that this rule is not ''economically significant'' as defined in section 3(f)(1) of E.O. 12866, and therefore it does not require a full economic impact analysis under section 6(a)(3)(C) of the Order. Under the new exemption, contracts would not be exempt unless price is equal to or less important than the combination of other non-price or cost factors in selecting the

[1] The State of Small Business: A Report of the President, 1996 (1997).

contractor. Therefore it is not anticipated that the changed rule will have an annual effect on the economy of $100 million or more or adversely affect in a material way the economy, a sector of the economy, productivity, jobs, the environment, public health or safety, or State, local, or tribal governments or communities.

The Department has similarly concluded that this rule is not a ''major rule'' requiring approval by the Congress under the Small Business Regulatory Enforcement Fairness Act of 1996 (5 U.S.C. 801 *et seq.*). It will not likely result in (1) an annual effect on the economy of $100 million or more; (2) a major increase in costs or prices for consumers, individual industries, Federal, State or local government agencies, or geographic regions; or (3) significant adverse effects on competition, employment, investment, productivity, innovation, or on the ability of U.S.-based enterprises to compete with foreign-based enterprises in domestic or export markets.

For purposes of the Unfunded Mandates Reform Act of 1995, this rule does not include any federal mandate that may result in excess of $100 million in expenditures by state, local and tribal governments in the aggregate, or by the private sector. Furthermore, the requirements of the Unfunded Mandates Reform Act, 2 U.S.C. 1532, do not apply here because the rule does not include a ''Federal mandate.'' The term ''Federal mandate'' is defined to include either a ''Federal intergovernmental mandate'' or a ''Federal private sector mandate.'' 2 U.S.C. 658(6). Except in limited circumstances not applicable here, those terms do not include an enforceable duty which is ''a duty arising from participation in a voluntary program.'' 2 U.S.C. 658(7)(A). A decision by a contractor to bid on Federal service contracts is purely voluntary in nature, and the contractor's duty to meet Service Contract Act requirements arises ''from participation in a voluntary Federal program.''

The Department has also reviewed this rule in accordance with Executive Order 13132 regarding federalism, and has determined that it does not have ''federalism implications.'' The rule does not ''have substantial direct effects on the States, on the relationship between the national government and the States, or on the distribution of power and responsibilities among the various levels of government.''

VI. Document Preparation

This document was prepared under the direction and control of Thomas M. Markey, Deputy Administrator, Wage and Hour Division, Employment Standards Administration, U.S. Department of Labor.

List of Subjects in 29 CFR Part 4

Administrative practice and procedures, Employee benefit plans, Government contracts, Investigations, Labor, Law enforcement, Minimum wages, Penalties, Recordkeeping requirements, Reporting requirements, wages.

Accordingly, for the reasons set out in the preamble, 29 CFR part 4 is amended as set forth below:

PART 4—LABOR STANDARDS FOR FEDERAL SERVICE CONTRACTS

1. The authority citation for part 4 is revised to read as follows:

Authority: 41 U.S.C. 351 *et seq.*; 41 U.S.C. 38 and 39; 5 U.S.C. 301.

2. Section 4.123(e) is revised to read as follows:

§ 4.123 Administrative limitations, variances, tolerances , and exemptions.

* * * * *

(e) The following types of contracts have been exempted from all the provisions of the Service Contract Act of 1965, pursuant to section 4(b) of the Act, which exemptions the Secretary of Labor found are necessary and proper in the public interest or to avoid serious impairment of the conduct of Government business, and are in accord with the remedial purpose of the Act to protect prevailing labor standards:

(1)(i) Prime contracts or subcontracts principally for the maintenance, calibration, and/or repair of:

(A) Automated data processing equipment and office information/word processing systems;

(B) Scientific equipment and medical apparatus or equipment where the application of microelectronic circuitry or other technology of at least similar sophistication is an essential element (for example, Federal Supply Classification (FSC) Group 65, Class 6515, ''Medical Diagnostic Equipment''; Class 6525, ''X-Ray Equipment''; FSC Group 66, Class 6630, ''Chemical Analysis Instruments''; Class 6665, ''Geographical and Astronomical Instruments'', are largely composed of the types of equipment exempted under this paragraph);

(C) Office/business machines not otherwise exempt pursuant to paragraph (e)(1)(i)(A) of this section, where such services are performed by the manufacturer or supplier of the equipment.

(ii) The exemptions set forth in this paragraph (e)(1) shall apply only under the following circumstances:

(A) The items of equipment are commercial items which are used regularly for other than Government purposes, and are sold or traded by the contractor (or subcontractor in the case of an exempt subcontract) in substantial quantities to the general public in the course of normal business operations;

(B) The prime contract or subcontract services are furnished at prices which are, or are based on, established catalog or market prices for the maintenance, calibration, and/or repair of such commercial items. An ''established catalog price'' is a price included in a catalog, price list, schedule, or other form that is regularly maintained by the manufacturer or the contractor, is either published or otherwise available for inspection by customers, and states prices at which sales currently, or were last, made to a significant number of buyers constituting the general public. An ''established market price'' is a current price, established in the usual course of trade between buyers and sellers free to bargain, which can be substantiated from sources independent of the manufacturer or contractor; and

(C) The contractor utilizes the same compensation (wage and fringe benefits) plan for all service employees performing work under the contract as the contractor uses for these employees and equivalent employees servicing the same equipment of commercial customers;

(D) The contractor certifies to the provisions in this paragraph (e)(1)(ii). Certification by the prime contractor as to its compliance with respect to the prime contract also constitutes its certification as to compliance by its subcontractor if it subcontracts out the exempt services. The certification shall be included in the prime contract or subcontract.

(iii)(A) Determinations of the applicability of this exemption to prime contracts shall be made in the first instance by the contracting officer on or before contract award. In making a judgment that the exemption applies, the contracting officer shall consider all factors and make an affirmative determination that all of the conditions in paragraph (e)(1) of this section have been met.

(B) Determinations of the applicability of this exemption to subcontracts shall be made by the prime contractor on or before subcontract award. In making a judgment that the exemption applies, the prime contractor shall consider all factors and make an affirmative determination that all of the conditions in paragraph (e)(1) have been met.

(iv)(A) If the Administrator determines after award of the prime

contract that any of the requirements in paragraph (e)(1) for exemption has not been met, the exemption will be deemed inapplicable, and the contract shall become subject to the Service Contract Act, effective as of the date of the Administrator's determination. In such case, the corrective procedures in § 4.5(c)(2) shall be followed.

(B) The prime contractor is responsible for compliance with the requirements of the Service Contract Act by its subcontractors, including compliance with all of the requirements of this exemption (see § 4.114(b)). If the Administrator determines that any of the requirements in paragraph (e)(1) for exemption has not been met with respect to a subcontract, the exemption will be deemed inapplicable, and the prime contractor may be responsible for compliance with the Act effective as of the date of contract award.

(2)(i) Prime contracts or subcontracts principally for the following services where the services under the contract or subcontract meet all of the criteria set forth in paragraph (e)(2)(ii) of this section and are not excluded by paragraph (e)(2)(iii):

(A) Automobile or other vehicle (*e.g.,* aircraft) maintenance services (other than contracts to operate a Government motor pool or similar facility);

(B) Financial services involving the issuance and servicing of cards (including credit cards, debit cards, purchase cards, smart cards, and similar card services);

(C) Contracts with hotels/motels for conferences, including lodging and/or meals which are part of the contract for the conference (which shall not include ongoing contracts for lodging on an as needed or continuing basis);

(D) Maintenance, calibration, repair and/or installation (where the installation is not subject to the Davis-Bacon Act, as provided in § 4.116(c)(2)) services for all types of equipment where the services are obtained from the manufacturer or supplier of the equipment under a contract awarded on a sole source basis;

(E) Transportation by common carrier of persons by air, motor vehicle, rail, or marine vessel on regularly scheduled routes or via standard commercial services (not including charter services);

(F) Real estate services, including real property appraisal services, related to housing federal agencies or disposing of real property owned by the Federal Government; and

(G) Relocation services, including services of real estate brokers and appraisers, to assist federal employees or military personnel in buying and selling homes (which shall not include actual moving or storage of household goods and related services).

(ii) The exemption set forth in this paragraph (e)(2) shall apply to the services listed in paragraph (e)(2)(i) only when all of the following criteria are met:

(A) The services under the prime contract or subcontract are commercial—*i.e.,* they are offered and sold regularly to non-Governmental customers, and are provided by the contractor (or subcontractor in the case of an exempt subcontract) to the general public in substantial quantities in the course of normal business operations.

(B) The prime contract or subcontract will be awarded on a sole source basis or the contractor or subcontractor will be selected for award on the basis of other factors in addition to price. In such cases, price must be equal to or less important than the combination of other non-price or cost factors in selecting the contractor.

(C) The prime contract or subcontract services are furnished at prices which are, or are based on, established catalog or market prices. An established price is a price included in a catalog, price list, schedule, or other form that is regularly maintained by the contractor or subcontractor, is either published or otherwise available for inspection by customers, and states prices at which sales are currently, or were last, made to a significant number of buyers constituting the general public. An established market price is a current price, established in the usual course of trade between buyers and sellers free to bargain, which can be substantiated from sources independent of the manufacturer or contractor.

(D) Each service employee who will perform services under the Government contract or subcontract will spend only a small portion of his or her time (a monthly average of less than 20 percent of the available hours on an annualized basis, or less than 20 percent of available hours during the contract period if the contract period is less than a month) servicing the government contract or subcontract.

(E) The contractor utilizes the same compensation (wage and fringe benefits) plan for all service employees performing work under the contract or subcontract as the contractor uses for these employees and for equivalent employees servicing commercial customers.

(F) The contracting officer (or prime contractor with respect to a subcontract) determines in advance, based on the nature of the contract requirements and knowledge of the practices of likely offerors, that all or nearly all offerors will meet the requirements in paragraph (e)(2)(ii) of this section. Where the services are currently being performed under contract, the contracting officer or prime contractor shall consider the practices of the existing contractor in making a determination regarding the requirements in paragraph (e)(2)(ii). If upon receipt of offers, the contracting officer finds that he or she did not correctly determine that all or nearly all offerors would meet the requirements, the Service Contract Act shall apply to the procurement, even if the successful offeror has certified in accordance with paragraph (e)(2)(ii)(G) of this section.

(G) The contractor certifies in the prime contract or subcontract, as applicable, to the provisions in paragraph (e)(2)(ii)(A) and (C) through (E) of this section. Certification by the prime contractor as to its compliance with respect to the prime contract also constitutes its certification as to compliance by its subcontractor if it subcontracts out the exempt services. If the contracting officer or prime contractor has reason to doubt the validity of the certification, SCA stipulations shall be included in the prime contract or subcontract.

(iii)(A) If the Administrator determines after award of the prime contract that any of the requirements in paragraph (e)(2) for exemption has not been met, the exemption will be deemed inapplicable, and the contract shall become subject to the Service Contract Act. In such case, the corrective procedures in § 4.5(c)(2) shall be followed.

(B) The prime contractor is responsible for compliance with the requirements of the Service Contract Act by its subcontractors, including compliance with all of the requirements of this exemption (see § 4.114(b)). If the Department of Labor determines that any of the requirements in paragraph (e)(2) for exemption has not been met with respect to a subcontract, the exemption will be deemed inapplicable, and the prime contractor may be responsible for compliance with the Act, as of the date of contract award.

(iv) The exemption set forth in this paragraph (e)(2) does not apply to solicitations and contracts:

(A) Entered into under the Javits-Wagner-O'Day Act, 41 U.S.C. 47;

(B) For the operation of a Government facility or portion thereof (but may be applicable to subcontracts for services set forth in paragraph (e)(2)(ii) that meet all of the criteria of paragraph (e)(2)(ii)); or

(C) Subject to section 4(c) of the Service Contract Act, as well as any

options or extensions under such contract.

Signed at Washington, DC, on this 11th day of January, 2001.

T. Michael Kerr,

Administrator, Wage and Hour Division.

[FR Doc. 01–1337 Filed 1–17–01; 8:45 am]

BILLING CODE 4510–27–P

Federal Register

Thursday,
January 18, 2001

Part XI

Department of Defense

General Services Administration

National Aeronautics and Space Administration

48 CFR Parts 22 and 52

Federal Acquisition Regulation; Final Rules

Department of Labor

Bureau of International Labor Affairs; List of Products Requiring Federal Contractor Certification as to Forced or Indentured Child Labor; Notices

DEPARTMENT OF DEFENSE

GENERAL SERVICES ADMINISTRATION

NATIONAL AERONAUTICS AND SPACE ADMINISTRATION

48 CFR Parts 22 and 52

[FAC 97–23; FAR Case 1999–608]

RIN 9000–AI51

Federal Acquisition Regulation; Prohibition of Acquisition of Products Produced by Forced or Indentured Child Labor

AGENCIES: Department of Defense (DoD), General Services Administration (GSA), and National Aeronautics and Space Administration (NASA).

ACTION: Final rule.

SUMMARY: The Civilian Agency Acquisition Council and the Defense Acquisition Regulations Council (Councils) are issuing a final rule to amend the Federal Acquisition Regulation (FAR) to implement the specific requirements of Executive Order 13126, Prohibition of Acquisition of Products Produced by Forced or Indentured Child Labor, as well as to prescribe further appropriate actions to comply with the broad policy of the Executive Order (*i.e.,* to enforce laws prohibiting the manufacture or importation of products that have been mined, produced, or manufactured wholly or in part using forced or indentured child labor).

DATES: *Effective Date:* February 20, 2001.

Applicability Date: The FAR, as amended by this rule, is applicable to solicitations issued on or after February 20, 2001 per FAR 1.108(d).

FOR FURTHER INFORMATION CONTACT: The FAR Secretariat, Room 4035, GS Building, Washington, DC, 20405, (202) 501–4755, for information pertaining to status or publication schedules. For clarification of content, contact Ms. Linda Nelson, Procurement Analyst, at (202) 501–3775. Please cite FAC 97–23, FAR case 1999–608.

SUPPLEMENTARY INFORMATION:

A. Background

This final rule amends the FAR by adding a new FAR subpart on prohibition of acquisition of products produced by forced or indentured child labor (Subpart 22.15), adding a new certification regarding knowledge of child labor for listed end products (FAR 52.212–3 and 52.222–18), and adding a clause at 52.222–19, that requires cooperation with authorities if the solicitation included the certification provision and provides remedies for violations relating to use of forced or indentured child labor.

On June 12, 1999, the President signed Executive Order 13126, Prohibition of Acquisition of Products Produced by Forced or Indentured Child Labor (the Executive Order). The Executive Order states a broad policy that executive agencies must take appropriate actions to enforce the laws prohibiting the manufacture or importation of products mined, produced, or manufactured wholly or in part by forced or indentured child labor.

Section 2 of the Executive Order directed the Department of Labor (DoL), in consultation with the Department of Treasury and the Department of State, to publish in the **Federal Register** a list of products (the List, identified by their country of origin, for which there is a reasonable basis to believe that such product may have been mined, produced, or manufactured by forced or indentured child labor. DoL published the preliminary List in the **Federal Register** on September 6, 2000 (65 FR 54108–54112), and solicited public comment. After receipt and consideration of the public comments, DoL is publishing the final List in today's **Federal Register**.

Section 3 of the Executive Order required the Councils to issue a proposed rule, amending the FAR to implement the policy expressed in the Executive Order. Accordingly, the Councils published a proposed rule in the **Federal Register** on September 6, 2000 (65 FR 54104–54107). Public comments on the proposed rule were due by November 6, 2000.

Ten respondents submitted public comments. Most comments received did not object to the basic policy but were outside the scope of the case, because they request FAR revisions that go beyond the scope of the Executive Order or are inconsistent with the requirements of the Executive Order.

For example, some suggested expanding the scope of the mandate of the Executive Order in the regulation to address products made by convict labor and forced or indentured labor by persons 18 or older—clearly outside the purview of this rulemaking. Other respondents suggested using a different definition of ''forced or indentured child labor,'' a comment that has been addressed in the companion rule being issued simultaneously by the Department of Labor. The Councils carefully considered all comments in formulation of the final rule.

The Councils are issuing a final rule that is the same as the proposed rule, except for minor editorial changes. This is a significant regulatory action, and therefore, was subject to review under Section 6(b) of Executive Order 12866, Regulatory Planning and Review, dated September 30, 1993. This rule is not a major rule under 5 U.S.C. 804.

B. Regulatory Flexibility Act

The Department of Defense, the General Services Administration, and the National Aeronautics and Space Administration certify that this final rule will not have a significant economic impact on a substantial number of small entities within the meaning of the Regulatory Flexibility Act, 5 U.S.C. 601, *et seq.*, because only a small percentage of acquisitions are for products on the DoL List, there is minimal impact on offerors providing a listed product that originates in a country other than the corresponding countries identified on the DoL List, and not all offerors responding to solicitations for these acquisitions are small entities. With regard to the clause that requires cooperation with authorities and provides remedies for violations relating to use of forced or indentured child labor, we expect that very few contractors are furnishing end products or components produced by forced or indentured child labor. The rule does not apply to micro-purchases.

The Councils did not receive any comments regarding the Regulatory Flexibility Act as a result of publication of the proposed rule in the **Federal Register** at 65 FR 54104.

C. Nonstatutory Certification Approval

In accordance with Section 29 of the Office of Federal Procurement Policy Act, 41 U.S.C. Section 425, the FAR Council has requested approval from the Administrator for Federal Procurement Policy for inclusion of a nonstatutory certification in the Federal Acquisition Regulation. In the absence of an Administrator, that approval has been granted by the Director of the Office of Management and Budget in accordance with the Federal Vacancies Reform Act of 1998, 5 U.S.C. 3348(b)(2).

D. Paperwork Reduction Act

The Paperwork Reduction Act (Pub. L. 104–13) applies. This final rule contains information collection requirements that have been submitted to the Office of Management and Budget (OMB) which will not take effect prior to OMB approval of these provisions. Two respondents commented on the estimated burden of the information collection requirements.

The Councils note that the average response time reflects the average

burden on all contractors, including those who must simply certify that they are not supplying products that were mined, produced, or manufactured in the corresponding country identified on the DoL List. We also anticipate that, given the need to comply with the Tariff Act of 1930, many offerors would already have taken steps that would enable them to make the necessary certification, before they sought to supply a product from a country identified on the DoL List.

The proposed rule erroneously stated the estimated hours per response as .30 hours rather than .5 hours (30 minutes). This does not change the total estimate of 250 response burden hours per year. The revised annual reporting burden is estimated as follows:

Respondents: 500.
Responses per respondent: 1.
Total annual responses: 500.
Preparation hours per response: .5.
Total response burden hours: 250.

List of Subjects in 48 CFR Parts 22 and 52

Government procurement.

Dated: January 12, 2001.

Al Matera,

Acting Director, Federal Acquisition Policy Division.

Federal Acquisition Circular

Federal Acquisition Circular (FAC) 97–23 is issued under the authority of the Secretary of Defense, the Administrator of General Services, and the Administrator for the National Aeronautics and Space Administration.

All Federal Acquisition Regulation (FAR) changes and other directive material contained in FAC 97–23 are effective February 20, 2001.

Dated: January 11, 2001.

R.D. Kerrins, Jr.,
Acting Director, Defense Procurement, Department of Defense.

Dated: January 11, 2001.

David A. Drabkin,
Deputy Associate Administrator, Office of Acquisition Policy, General Services Administration.

Dated: January 12, 2001.

Anne Guenther,
Acting Associate Administrator for Procurement, National Aeronautics and Space Administration.

Therefore, DoD, GSA, and NASA amend 48 CFR Parts 22 and 52 as set forth below:

1. The authority citation for 48 CFR Parts 22 and 52 continues to read as follows:

Authority: 40 U.S.C. 486(c); 10 U.S.C. chapter 137; and 42 U.S.C. 2473(c).

PART 22—APPLICATION OF LABOR LAWS TO GOVERNMENT ACQUISITIONS

2. Add Subpart 22.15 to read as follows:

Subpart 22.15—Prohibition of Acquisition of Products Produced by Forced or Indentured Child Labor

Sec.
22.1500 Scope.
22.1501 Definitions.
22.1502 Policy.
22.1503 Procedures for acquiring end products on the List of Products Requiring Contractor Certification as to Forced or Indentured Child Labor.
22.1504 Violations and remedies.
22.1505 Solicitation provision and contract clause.

22.1500 Scope.

This subpart applies to acquisitions of supplies that exceed the micro-purchase threshold.

22.1501 Definitions.

As used in this subpart—

Forced or indentured child labor means all work or service—

(1) Exacted from any person under the age of 18 under the menace of any penalty for its nonperformance and for which the worker does not offer himself voluntarily; or

(2) Performed by any person under the age of 18 pursuant to a contract the enforcement of which can be accomplished by process or penalties.

List of Products Requiring Contractor Certification as to Forced or Indentured Child Labor means the list published by the Department of Labor in accordance with Executive Order 13126 of June 12, 1999, Prohibition of Acquisition of Products Produced by Forced or Indentured Child Labor. The list identifies products, by their country of origin, that the Departments of Labor, Treasury, and State have a reasonable basis to believe might have been mined, produced, or manufactured by forced or indentured child labor.

22.1502 Policy.

Agencies must take appropriate action to enforce the laws prohibiting the manufacture or importation of products that have been mined, produced, or manufactured wholly or in part by forced or indentured child labor (19 U.S.C. 1307, 29 U.S.C. 201, *et seq.*, and 41 U.S.C. 35, *et seq.*). Agencies should make every effort to avoid acquiring such products.

22.1503 Procedures for acquiring end products on the List of Products Requiring Contractor Certification as to Forced or Indentured Child Labor.

(a) When issuing a solicitation for supplies expected to exceed the micro-purchase threshold, the contracting officer must check the List of Products Requiring Contractor Certification as to Forced or Indentured Child Labor (the List) (www.dol.gov/dol/ilab) (see 22.1505(a)). Appearance of a product on the List is not a bar to purchase of any such product mined, produced, or manufactured in the identified country, but rather is an alert that there is a reasonable basis to believe that such product may have been mined, produced, or manufactured by forced or indentured child labor.

(b) The requirements of this subpart that result from the appearance of any end product on the List do not apply to a solicitation or contract if the identified country of origin on the List is—

(1) Canada, and the anticipated value of the acquisition is $25,000 or more (see 25.405);

(2) Israel, and the anticipated value of the acquisition is $50,000 or more (see 25.406);

(3) Mexico, and the anticipated value of the acquisition is $54,372 or more (see 25.405); or

(4) Aruba, Austria, Belgium, Denmark, Finland, France, Germany, Greece, Hong Kong, Ireland, Italy, Japan, Korea, Liechtenstein, Luxembourg, Netherlands, Norway, Portugal, Singapore, Spain, Sweden, Switzerland, or the United Kingdom and the anticipated value of the acquisition is $177,000 or more (see 25.403(b)).

(c) Except as provided in paragraph (b) of this section, before the contracting officer may make an award for an end product (regardless of country of origin) of a type identified by country of origin on the List the offeror must certify that—

(1) It will not supply any end product on the List that was mined, produced, or manufactured in a country identified on the List for that product, as specified in the solicitation by the contracting officer in the Certification Regarding Knowledge of Child Labor for Listed End Products; or

(2)(i) It has made a good faith effort to determine whether forced or indentured child labor was used to mine, produce, or manufacture any end product to be furnished under the contract that is on the List and was mined, produced, or manufactured in a country identified on the List for that product; and

(ii) On the basis of those efforts, the offeror is unaware of any such use of child labor.

(d) Absent any actual knowledge that the certification is false, the contracting officer must rely on the offerors' certifications in making award decisions.

(e) Whenever a contracting officer has reason to believe that forced or indentured child labor was used to mine, produce, or manufacture an end product furnished pursuant to a contract awarded subject to the certification required in paragraph (c) of this section, the contracting officer must refer the matter for investigation by the agency's Inspector General, the Attorney General, or the Secretary of the Treasury, whichever is determined appropriate in accordance with agency procedures, except to the extent that the end product is from the country listed in paragraph (b) of this section, under a contract exceeding the applicable threshold.

(f) Proper certification will not prevent the head of an agency from imposing remedies in accordance with section 22.1504(a)(4) if it is later discovered that the contractor has furnished an end product or component that has in fact been mined, produced, or manufactured, wholly or in part, using forced or indentured child labor.

22.1504 Violations and remedies.

(a) *Violations.* The Government may impose remedies set forth in paragraph (b) of this section for the following violations (note that the violations in paragraphs (a)(3) and (a)(4) of this section go beyond violations of the requirements relating to certification of end products) (see 22.1503):

(1) The contractor has submitted a false certification regarding knowledge of the use of forced or indentured child labor.

(2) The contractor has failed to cooperate as required in accordance with the clause at 52.222–19, Child Labor Cooperation with Authorities and Remedies, with an investigation of the use of forced or indentured child labor by an Inspector General, the Attorney General, or the Secretary of the Treasury.

(3) The contractor uses forced or indentured child labor in its mining, production, or manufacturing processes.

(4) The contractor has furnished an end product or component mined, produced, or manufactured, wholly or in part, by forced or indentured child labor. Remedies in paragraphs (b)(2) and (b)(3) of this section are inappropriate unless the contractor knew of the violation.

(b) *Remedies.* (1) The contracting officer may terminate the contract.

(2) The suspending official may suspend the contractor in accordance with the procedures in subpart 9.4.

(3) The debarring official may debar the contractor for a period not to exceed 3 years in accordance with the procedures in subpart 9.4.

22.1505 Solicitation provision and contract clause.

(a) Except as provided in paragraph (b) of 22.1503, insert the provision at 52.222–18, Certification Regarding Knowledge of Child Labor for Listed End Products, in all solicitations that are expected to exceed the micro-purchase threshold and are for the acquisition of end products (regardless of country of origin) of a type identified by country of origin on the List of Products Requiring Contractor Certification as to Forced or Indentured Child Labor, except solicitations for commercial items that include the provision at 52.212–3, Offeror Representations and Certifications—Commercial Items. The contracting officer must identify in paragraph (b) of the provision at 52.222–18, Certification Regarding Knowledge of Child Labor for Listed End Products, or paragraph (i)(1) of the provision at 52.212–3, any applicable end products and countries of origin from the List. For solicitations estimated to equal or exceed $25,000, the contracting officer must exclude from the List in the solicitation end products from any countries identified at 22.1503(b), in accordance with the specified thresholds.

(b) Insert the clause at 52.222–19, Child Labor—Cooperation with Authorities and Remedies, in all solicitations and contracts for the acquisition of supplies that are expected to exceed the micro-purchase threshold.

PART 52—SOLICITATION PROVISIONS AND CONTRACT CLAUSES

3. In section 52.212–3, revise the date of the provision; add, in alphabetical order, in paragraph (a) the definition ''Forced or indentured child labor''; and add paragraph (i) to read as follows:

52.212–3 Offeror Representations and Certifications—Commercial Items.

* * * * *

OFFEROR REPRESENTATIONS AND CERTIFICATIONS—COMMERCIAL ITEMS (February 2001)

(a) * * *

* * * * *

Forced or indentured child labor means all work or service—

(1) Exacted from any person under the age of 18 under the menace of any penalty for its nonperformance and for which the worker does not offer himself voluntarily; or

(2) Performed by any person under the age of 18 pursuant to a contract the enforcement of which can be accomplished by process or penalties.

* * * * *

(i) *Certification Regarding Knowledge of Child Labor for Listed End Products (Executive Order 13126). [The Contracting Officer must list in paragraph (i)(1) any end products being acquired under this solicitation that are included in the List of Products Requiring Contractor Certification as to Forced or Indentured Child Labor, unless excluded at 22.1503(b).*]

(1) *Listed end products.*

Listed End Product

_____

_____

Listed Countries of Origin

_____

_____

(2) *Certification.* [*If the Contracting Officer has identified end products and countries of origin in paragraph (i)(1) of this provision, then the offeror must certify to either (i)(2)(i) or (i)(2)(ii) by checking the appropriate block.*]

☐ (i) The offeror will not supply any end product listed in paragraph (i)(1) of this provision that was mined, produced, or manufactured in the corresponding country as listed for that product.

☐ (ii) The offeror may supply an end product listed in paragraph (i)(1) of this provision that was mined, produced, or manufactured in the corresponding country as listed for that product. The offeror certifies that it has made a good faith effort to determine whether forced or indentured child labor was used to mine, produce, or manufacture any such end product furnished under this contract. On the basis of those efforts, the offeror certifies that it is not aware of any such use of child labor.

3a. Effective March 12, 2001, the date of the clause at 52.212–3 is amended by removing ''(February 2001)'' and adding (MAR 2001) in its place).

4. In section 52.212–5, revise the date of the clause and the introductory text of paragraph (b); redesignate paragraphs (b)(16) through (b)(27) as (b)(17) through (b)(28), respectively, and add new paragraph (b)(16) to read as follows:

52.212–5 Contract Terms and Conditions Required to Implement Statutes or Executive Orders—Commercial Items.

* * * * *

Contract Terms and Conditions Required to Implement Statues or Executive Orders—Commercial Items (February 2001)

* * * * *

(b) The Contractor shall comply with the FAR clauses in this paragraph (b) that the Contracting Officer has indicated as being incorporated in this contract by reference to implement

provisions of law or Executive orders applicable to acquisitions of commercial items or components:

[*Contracting Officer must check as appropriate.*]

* * * * *

____(16) 52.222–19, Child Labor—Cooperation with Authorities and Remedies (E.O. 13126).

* * * * *

5. In section 52.213–4, revise the date of the clause; redesignate paragraphs (b)(1)(vii) through (xi) as (b)(1)(viii) through (xii), respectively, and add new paragraph (vii) to read as follows:

52.213–4 Terms and Conditions—Simplified Acquisitions (Other than Commercial Items).

* * * * *

Terms and Conditions—Simplified Acquisitions (Other Than Commercial Items) (February 2001)

* * * * *

(vii) 52.222–19, Child Labor—Cooperation with Authorities and Remedies (JAN 2001) (E.O. 13126). (Applies to contracts for supplies exceeding the micro-purchase threshold.)

* * * * *

5a. Effective March 12, 2001, the date of the clause at 52.213–4 is amended by removing ''February 2001'' and adding ''(MAR 2001)'' in its place).

6. Add new sections 52.222–18 and 52.222–19 to read as follows:

52.222–18 Certification Regarding Knowledge of Child Labor for Listed End Products.

As prescribed in 22.1505(a), insert the following provision:

Certification Regarding Knowledge of Child Labor for Listed End Products (February 2001)

(a) *Definition.*

Forced or indentured child labor means all work or service—

(1) Exacted from any person under the age of 18 under the menace of any penalty for its nonperformance and for which the worker does not offer himself voluntarily; or

(2) Performed by any person under the age of 18 pursuant to a contract the enforcement of which can be accomplished by process or penalties.

(b) *Listed end products.* The following end product(s) being acquired under this solicitation is (are) included in the List of Products Requiring Contractor Certification as to Forced or Indentured Child Labor, identified by their country of origin. There is a reasonable basis to believe that listed endproducts from the listed countries of origin may have been mined, produced, or manufactured by forced or indentured child labor.

Listed End Product

_____

_____

Listed Countries of Origin

_____

_____

(c) *Certification.* The Government will not make award to an offeror unless the offeror, by checking the appropriate block, certifies to either paragraph (c)(1) or paragraph (c)(2) of this provision.

☐ (1) The offeror will not supply any end product listed in paragraph (b) of this provision that was mined, produced, or manufactured in a corresponding country as listed for that end product.

☐ (2) The offeror may supply an end product listed in paragraph (b) of this provision that was mined, produced, or manufactured in the corresponding country as listed for that product. The offeror certifies that it has made a good faith effort to determine whether forced or indentured child labor was used to mine, produce, or manufacture such end product. On the basis of those efforts, the offeror certifies that it is not aware of any such use of child labor.

(End of provision)

52.222–19 Child Labor—Cooperation with Authorities and Remedies.

As prescribed in 22.1505(b), insert the following clause:

Child Labor—Cooperation With Authorities and Remedies (February 2001)

(a) *Applicability.* This clause does not apply to the extent that the Contractor is supplying end products mined, produced, or manufactured in—

(1) Canada, and the anticipated value of the acquisition is $25,000 or more;

(2) Israel, and the anticipated value of the acquisition is $50,000 or more;

(3) Mexico, and the anticipated value of the acquisition is $54,372 or more; or

(4) Aruba, Austria, Belgium, Denmark, Finland, France, Germany, Greece, Hong Kong, Ireland, Italy, Japan, Korea, Liechtenstein, Luxembourg, Netherlands, Norway, Portugal, Singapore, Spain, Sweden, Switzerland, or the United Kingdom and the anticipated value of the acquisition is $177,000 or more.

(b) *Cooperation with Authorities.* To enforce the laws prohibiting the manufacture or importation of products mined, produced, or manufactured by forced or indentured child labor, authorized officials may need to conduct investigations to determine whether forced or indentured child labor was used to mine, produce, or manufacture any product furnished under this contract. If the solicitation includes the provision 52.222–18, Certification Regarding Knowledge of Child Labor for Listed End Products, or the equivalent at 52.212–3(i), the Contractor agrees to cooperate fully with authorized officials of the contracting agency, the Department of the Treasury, or the Department of Justice by providing reasonable access to records, documents, persons, or premises upon reasonable request by the authorized officials.

(c) *Violations.* The Government may impose remedies set forth in paragraph (d) for the following violations:

(1) The Contractor has submitted a false certification regarding knowledge of the use of forced or indentured child labor for listed end products.

(2) The Contractor has failed to cooperate, if required, in accordance with paragraph (b) of this clause, with an investigation of the use of forced or indentured child labor by an Inspector General, Attorney General, or the Secretary of the Treasury.

(3) The Contractor uses forced or indentured child labor in its mining, production, or manufacturing processes.

(4) The Contractor has furnished under the contract end products or components that have been mined, produced, or manufactured wholly or in part by forced or indentured child labor. (The Government will not pursue remedies at paragraph (d)(2) or paragraph (d)(3) of this clause unless sufficient evidence indicates that the Contractor knew of the violation.)

(d) *Remedies.* (1) The Contracting Officer may terminate the contract.

(2) The suspending official may suspend the Contractor in accordance with procedures in FAR Subpart 9.4.

(3) The debarring official may debar the Contractor for a period not to exceed 3 years in accordance with the procedures in FAR Subpart 9.4.

(End of clause)

[FR Doc. 01–1503 Filed 1–17–01; 8:45 am]

BILLING CODE 6820–EP–P

DEPARTMENT OF DEFENSE GENERAL SERVICES ADMINISTRATION NATIONAL AERONAUTICS AND SPACE ADMINISTRATION

48 CFR Chapter 1

Federal Acquisition Regulation; Small Entity Compliance Guide

AGENCIES: Department of Defense (DoD), General Services Administration (GSA), and National Aeronautics and Space Administration (NASA).

ACTION: Small entity compliance guide.

SUMMARY: This document is issued under the joint authority of the Secretary of Defense, the Administrator of General Services and the Administrator for the National Aeronautics and Space Administration. This *Small Entity Compliance Guide* has been prepared in accordance with Section 212 of the Small Business Regulatory Enforcement Fairness Act of 1996 (Public Law 104–121). It consists of a summary of the rule appearing in Federal Acquisition Circular (FAC) 97–23 which amends the Federal Acquisition Regulation (FAR). Interested parties may obtain further information regarding this rule by

referring to FAC 97–23 which precedes this document. This document is also available via the Internet at http://www.arnet.gov/far.

FOR FURTHER INFORMATION CONTACT: Laurie Duarte, FAR Secretariat, (202) 501–4225. For clarification of content, contact Ralph De Stefano, Procurement Analyst, General Services Administration, at (202) 501–1758.

Prohibition of Acquisition of Products Produced by Forced or Indentured Child Labor (FAC 97–23, FAR Case 1999–608)

This final rule amends the FAR by adding a new FAR subpart on prohibition of acquisition of products produced by forced or indentured child labor (Subpart 22.15), adding a new certification regarding knowledge of child labor for listed end products (FAR 52.212–3 and 52.222–18), and adding a clause at 52.222–19, which requires cooperation with authorities if the solicitation included the certification provision and provides remedies for violations relating to use of forced or indentured child labor.

Dated: January 12, 2001.

Al Matera,

Acting Director, Federal Acquisition Policy Division.

[FR Doc. 01–1504 Filed 1–17–01; 8:45 am]

BILLING CODE 6820–EP–P

DEPARTMENT OF LABOR

Office of the Secretary

Bureau of International Labor Affairs; Procedural Guidelines for the Maintenance of the List of Products Requiring Federal Contractor Certification as to Forced or Indentured Child Labor Under 48 CFR Subpart 22.15 and E.O. 13126

AGENCY: Office of the Secretary, Labor.

ACTION: Notice of procedural guidelines.

SUMMARY: This notice sets out procedural guidelines pertaining to the submission of information, review, and reporting process utilized by the Department of Labor's International Child Labor Program in maintaining and revising the list of products requiring certification as to forced or indentured child labor, pursuant to amendments to the Federal Acquisition Regulation (FAR), 48 CFR Subpart 22.15 and Executive Order No. 13126 (''Prohibition of Acquisition of Products Produced by Forced or Indentured Child Labor'').

EFFECTIVE DATE: January 18, 2001.

FOR FURTHER INFORMATION CONTACT: Ami Thakkar, International Child Labor Program, Bureau of International Labor Affairs, Room S–5303, U.S. Department of Labor, 200 Constitution Avenue, NW., Washington, DC 20210; telephone: (202) 208–4843; fax: (202) 219–4923.

SUPPLEMENTARY INFORMATION: Executive Order No. 13126 (''Prohibition of Acquisition of Products Produced by Forced or Indentured Child Labor'') was signed by President Clinton on June 12, 1999. The Executive Order declared that it was ''the policy of the United States Government * * * that the executive agencies shall take appropriate actions to enforce the laws prohibiting the manufacture or importation of goods, wares, articles, and merchandise mined, produced, or manufactured wholly or in part by forced or indentured child labor.''

Pursuant to Section 2 of the Executive Order, and following public notice and comment (including a public hearing held on August 10, 1999), the Department of Labor is publishing in today's **Federal Register** a final list of products, identified by their country of origin, that the Department, in consultation and cooperation with the Departments of State and Treasury, has a reasonable basis to believe might have mined, produced or manufactured with forced or indentured child labor. The List can be accessed on the Internet at www.dol.gov/dol/ilab or can be obtained from: International Child Labor Program, Bureau of International Labor Affairs, Room S–5303, U.S. Department of Labor, 200 Constitution Avenue, NW., Washington, DC 20210; telephone: (202) 208–4843; fax (202) 219–4923.

Pursuant to Section 3 of the Executive Order, in today's **Federal Register**, the Federal Acquisition Regulatory Councils published a final rule, pursuant to which federal contractors who supply products which appear on the list issued by the Department of Labor must certify to the contracting officer that the contractor or, in the case of an incorporated contractor, a responsible official of the contractor has made a good faith effort to determine whether forced or indentured child labor was used to mine, produce, or manufacture any product furnished under the contract and that, on the basis of those efforts, the contractor is unaware of any such use of child labor. The regulation also imposes other requirements with respect to contracts for products on the Department of Labor's list.

The Department of Labor expects that, over time, new information may become available with respect to the use of forced or indentured child labor and that other developments relevant to the list of products requiring certification as to forced or indentured child labor may occur. For example, new instances of the use of forced or indentured child labor may be discovered. Alternatively, the practice of using forced or indentured child labor in a particular country or industry may be effectively eliminated.

Accordingly, to carry out the purposes of FAR Subpart 22.15 and Executive Order No. 13126, the Department of Labor, may be required to examine and/or revise the list originally published today. The Department of Labor believes that it would be appropriate to establish a process by which members of the public may bring relevant information to the attention of the Department of Labor.

This Notice sets out the procedural guidelines that the Department of Labor intends to follow to maintain, examine, and, as appropriate, revise the list of products required by Executive Order No. 13126 and incorporated in 48 CFR Subpart 22.15. Under the guidelines, public notice and opportunity for comment will be provided before a product is added to, or deleted from, the Department of Labor's list.

Signed at Washington, DC, this 5th day of January, 2001.

Andrew J. Samet,

Deputy Under Secretary for International Affairs.

Notice of Procedural Guidelines

Section A. What Department of Labor Office Is Responsible for Maintaining the List of Products Requiring Federal Contractor Certification as to Forced or Indentured Child Labor?

1. The International Child Labor Program, within the Bureau of International Labor Affairs of the U.S. Department of Labor, will review all submissions of information relevant to the List of Products Requiring Federal Contractor Certification as to Forced or Indentured Child Labor, as published pursuant to Executive Order No. 13126 (''Prohibition of Acquisition of Products Produced by Forced or Indentured Child Labor''), and reflected in the FAR 48 CFR Subpart 22.15.

2. The International Child Labor Program, in consultation with the Departments of State and Treasury, will determine if such submissions may establish the need to add entries to, or delete entries from, the List of Products Requiring Federal Contractor Certification as to Forced or Indentured Child Labor.

Section B. What Do the Terms Used in These Procedural Guidelines Mean?

As used in these Guidelines:

''Adequate information'' means information relevant to the development of a reasonable basis for belief that a particular product included or not included on the List might have been mined, produced, or manufactured wholly or in part by forced or indentured child labor;

''The List'' means the List of Products Requiring Contractor Certification as to Forced or Indentured Child Labor as published in accordance with Executive Order 13126 and reflected in FAR 48 CFR Subpart 22.15;

''Non-governmental organization'' means any scientific, professional, business, non-profit, or public interest organization or association which is neither affiliated with, nor under the direction of, a government;

''Office'' means the International Child Labor Program of the Bureau of International Labor Affairs of the United States Department of Labor;

''Person'' means one or more individuals, non-governmental organizations, labor organizations, partnerships, associations, corporations, governmental entities, or legal representatives.

Section C. What Are the Functions of the Office With Respect to the List?

1. The Office shall—

(a) In consultation and cooperation with the Departments of State and Treasury, compile and maintain a current list of products and their countries of origin contained on the List;

(b) Periodically review and revise the List, as appropriate, either on the basis of information submissions from members of the public or on its own initiative, subject to public notice and comment;

(c) Receive, accept for review, and review information submissions pertaining to the inclusion on or deletion from the List, as set out in Sections D, E, and F;

(a) Consider and weigh several factors including: the nature of the information describing the use of forced or indentured child labor; the source of the information; the date of the information; the extent of corroboration of the information by appropriate sources; whether the information involved more than an isolated incident; and whether recent and credible efforts are being made to address forced or indentured child labor in a particular country and industry; and

(e) Include in the List the name and telephone number of the office responsible for its maintenance.

2. The List shall indicate—

(a) The names of products, identified by their country of origin, for which there is a reasonable basis to believe that the product might have been mined, produced, or manufactured wholly or in part by forced or indentured child labor;

(b) The date on which the product was included on the List.

3. Questions on the List—information is available by direct request to the Office by writing the International Child Labor Program, Bureau of International Labor Affairs, Rm. S–5303, U.S. Department of Labor, 200 Constitution Ave, NW., Washington, DC 20210.

Section D. How May a Person Submit Information to the Office Regarding Adding or Deleting a Product From the List?

1. Any person may file an information submission with the Office regarding either the inclusion of a product on the List or the deletion of a product from the List. A single copy is satisfactory for filing. Filing may be by hand delivery, mail delivery, or facsimile transmission.

2. The submission should identify clearly the person filing the submission and should be signed and dated. It should state with specificity the product and its country of origin which the submitter requests the Office to consider and should include relevant information available to the submitter.

Section E. How will the Office decide to accept a submission of information?

1. Within 60 days, unless there are good reasons for delay, the Office will decide whether to accept a submission of information for review. The Office may communicate with the submitter during this period regarding any matter relating to the decision.

2. In general, the Office may accept a submission of information if it provides adequate information and if a review would not be inconsistent with Executive Order No. 13126 or applicable laws or regulations.

3. The Office may decline to accept a submission for review if, in its discretion, it determines that:

(a) The submission does not identify clearly the person filing the submission or is not signed and dated;

(b) The submission does not provide adequate information;

(c) The matter raised is not within the scope of 48 CFR Subpart 22.15 or Executive Order No. 13126.

(d) The submission is substantially similar to a recent submission and significant new information has not been provided; or

(e) Review of the submission would otherwise be inappropriate.

4. If the Office declines to accept a submission for review, the Office promptly will notify the submitter in writing and will provide the reasons for the decision.

5. If the Office accepts a submission of information, review will follow those procedures described in Section F.

Section F. What review process will be followed after a submission of information is accepted by the Office?

1. Following a decision by the Office to accept a submission of information, the Office will conduct such further examination of the available information as necessary or appropriate to assist the Office in making a determination.

2. Except for information exempt from public inspection, information relevant to the review will be placed in a public file. Information exempt from public inspection will be placed in a separate file.

3. The Office, in its discretion, may hold a hearing regarding the product raised in the submission of information, for the purpose of receiving information from interested persons.

4. The Office, after consulting with the Departments of Treasury and State, will publish in the **Federal Register** a notice of initial determination, which will include any proposed alteration to be made to the List. Public comments will be accepted for at least 30 days following publication of the **Federal Register** notice. Submissions relating to the same product and country may be resolved by joint determinations.

5. Any person may submit, in person, in writing, or through a representative, information and argument in support of or in opposition to the proposed determination, including any additional specific information that relates to the proposed revision of the List. The Office will consider all comments prior to publication of a final determination, which will be made in consultation and cooperation with the Departments of State and Treasury.

Section G. What process will the Office use to update the List on its own initiative?

1. If the Office obtains adequate information, other than through public submission, it will publish in the **Federal Register** a notice of initial determination, which will include any proposed alteration to be made to the List. Public comments will be accepted for at least 30 days following publication of the notice of initial determination.

2. Any person may submit, in person, in writing, or through a representative, information and argument in support of or in opposition to the initial determination, including any additional specific information that relates to the proposed revision of the List. The Office will consider all comments prior to publication of a final determination, made in consultation and cooperation with the Departments of State and Treasury.

Section H. How will the Office communicate a final determination about a product's placement on the List?

1. A final determination on whether a product will be added to, or deleted from, the List will be published in the **Federal Register**.

2. The List will be revised in accordance with a final determination as to a particular product, identified by its country of origin. The Office will maintain a current copy of the List.

[FR Doc. 01–952 Filed 1–17–01; 8:45 am]

BILLING CODE 4510–28–P

DEPARTMENT OF LABOR

Office of the Secretary

Bureau of International Labor Affairs; Notice of Final List of Products Requiring Federal Contractor Certification as to Forced or Indentured Child Labor Under Executive Order No. 13126

SUMMARY: As required by Executive Order No. 13126 (''Prohibition of Acquisition of Products Produced by Forced or Indentured Child Labor''), this notice sets forth a final list of products, by country of origin, which the Department of Labor, the Department of State, and the Department of the Treasury believe may have been mined, produced, or manufactured by forced or indentured child labor. Under a final rule by the Federal Acquisition Regulatory Council, published in today's issue of the **Federal Register**, which also implements Executive Order No. 13126, federal contractors who supply products on the list are required to certify, among other things, that they have made a good faith effort to determine whether forced or indentured child labor was used to produce the item. The Department of Labor is also publishing, in today's issue of the **Federal Register**, procedural guidelines that describe how the list of products will be updated in the future, through a public notice-and-comment process.

FOR FURTHER INFORMATION CONTACT: Ami Thakkar, International Child Labor Program, Bureau of International Labor Affairs, Room S–5303, U.S. Department of Labor, 200 Constitution Avenue, NW., Washington, DC 20210; telephone: (202) 208–4843; fax: (202) 219–4923.

SUPPLEMENTARY INFORMATION:

I. Background

Executive Order No. 13126, which was published in the **Federal Register** on June 19, 1999 (64 FR 32383–32385), required the Federal Acquisition Regulatory Council (the Civilian Agency Acquisition Council and the Defense Acquisition Regulations Council) to issue proposed rules to amend the Federal Acquisition Regulation (FAR), with respect to the procurement by federal agencies of products that may have been mined, produced, or manufactured with forced or indentured child labor. A proposed rule was published in the **Federal Register** on September 6, 2000 (65 FR 54104–54107), and public comment was invited. A final rule is being published in today's **Federal Register**.

Under that final rule, certain procurement related requirements will apply to products that appear on a list published by the Department of Labor, pursuant to Section 2 of Executive Order No. 13126, which required the Department of Labor, in consultation and cooperation with the Department of the Treasury and the Department of State, to ''publish in the **Federal Register** a list of products, identified by their country of origin, that those Departments have a reasonable basis to believe might have been mined, produced, or manufactured by forced or indentured child labor.''

As authorized by the Executive Order, the Department of Labor held a public hearing on August 10, 1999, at which several witnesses presented oral and written testimony concerning the development of a list of products. On September 6, 2000, in consultation and cooperation with the Department of State and the Department of the Treasury, the Department of Labor published a preliminary list of products in the **Federal Register** (65 FR 54108–54112), explained how the preliminary list was developed, and invited public comment. The public comment period closed on November 6, 2000.

II. Summary and Discussion of Significant Comments

Twenty-four comments were received. In developing the final list of products, the three Departments have carefully reviewed and considered the public comments received. The following is a summary of the significant comments and the three Departments' response.

A. Comments on the definition of ''forced or indentured child labor''

Several comments raise issues related to the definition of ''forced or indentured child labor'' used in determining the proposed list of products that may be produced by forced or indentured child labor. Executive Order No. 13126 defines

> ''forced or indentured child labor'' as: all work or service (1) exacted from any person under the age of 18 under the menace of any penalty for its nonperformance and for the worker does not offer himself voluntarily; or (2) performed by any person under the age of 18 pursuant to a contract the enforcement of which can be accomplished by process or penalties.

As explained in the Department of Labor's September 6, 2000 **Federal Register** notice, the ''two aspects of the definition represent alternatives which are not mutually exclusive.'' 65 FR 54109.

The definition of ''forced or indentured child labor'' in Executive Order No. 13126 is derived from, and generally consistent with, the Tariff Act of 1930, 19 U.S.C. 1307. That statute, enforced by the Customs Service of the Treasury Department, prohibits the importation into the United States of ''all goods, wares, articles, and merchandise mined, produced, or manufactured wholly or in part in any foreign country by convict labor or/and forced labor or/and indentured labor under penal sanctions.''

The Tariff Act specifically defines ''forced labor'' as ''all work or service which is exacted from any person under the menace of any penalty for its nonperformance and for which the worker does not offer himself voluntarily.'' The first part of the Executive Order's definition of ''forced or indentured child labor'' incorporates this statutory language.

The Tariff Act does not specifically define ''indentured labor under penal sanctions'' (the term used in that statute). The second part of the Executive Order's definition of ''forced or indentured child labor'' is intended to incorporate the Tariff Act's concept of indentured labor, as it involves children. This part of the Executive Order definition is derived directly from the legislative history of the Tariff Act. See 71 Cong. Rec. 4488–4499 (daily ed. Oct. 14, 1929).

In comments on behalf of the organizations in the Child Labor Coalition, the International Labor Rights Fund questions the definition of ''forced or indentured child labor'' in the Executive Order and urges the development of a different, significantly broader definition. The Fund's comments identify various abusive working conditions that the Fund suggests ''should be encompassed explicitly in the definition of 'forced or indentured child labor.' '' The Fund's comments do not refer to any specific basis in U.S. or international law for such an expanded definition.

The Department of Labor's September 6, 2000 **Federal Register** notice explained how the Labor, State, and Treasury Departments have applied the definition in the Executive Order and have evaluated a wide range of working conditions for the possibility of coercion, the essential element of the first part of the definition. 65 FR 54109. The Department of Labor, in consultation and cooperation with the Departments of State and Treasury, is charged with implementing the Executive Order and its definition of ''forced or indentured child labor.'' That definition is appropriately derived from the Tariff Act, as explained above, since the Executive Order embodies a procurement policy intended to be consistent with the Tariff Act. As has

been previously noted, some child labor abuses may not meet the established definition of ''forced or indentured child labor.''

The United States Council for International Business, in a comment noting its strong support for international efforts to end forced and indentured child labor, asks for clarification concerning the second part of the definition of ''forced or indentured child labor'' in the Executive Order with respect to situations in which persons under age 18: (1) Work under a legally enforceable ''collective bargaining agreement freely negotiated by the employer and the union representing workers in the bargaining unit;'' or (2) work under individual employment contracts that contain a ''penalty clause that is triggered by early termination,'' but where ''excessive process or penalties'' (as opposed to ''customary cancellation penalties'') are not involved.

The information provided by the U.S. Council is not detailed, especially with respect to individual employment contracts and the so-called ''penalty clause.'' On the basis of the description provided by the U.S. Council, however, it appears possible, depending on the facts, that neither situation would come within the second part of the Executive Order's definition of ''forced or indentured child labor,'' as interpreted consistently with the Tariff Act of 1930. As a general matter, there is no indication that Congress was concerned about legitimate collective bargaining agreements or legitimate employment contracts, providing for ordinary legal remedies, when it enacted the Tariff Act. In any case, neither situation described by the U.S. Council clearly implicates the concept of indentured labor under penal sanctions. For example, a child apparently would not be subject to criminal penalties, to a judicial order requiring the child to continue working, or to a state-sanctioned monetary penalty, as a means of enforcing the agreement or contract. With respect to employment contracts, the U.S. Council does not appear to be describing truly punitive provisions, designed to deter young workers from quitting employment in circumstances of exploitation or duress. Because there is no suggestion that children are being coerced to enter into a contract or to work under it, the first part of the Executive Order definition also may not apply to the situations described by the U.S. Council. The application of the Executive Order, of course, will depend on the specific factual circumstances of particular cases. Circumstances that suggest coercion, including coercion related to making or enforcing employment contracts, will be carefully examined.

In his comment, Senator Tom Harkin raises concerns about the application of the definition of ''forced or indentured child labor'' in the development of the list of products. The Departments have attempted to apply the definition in a way that is both consistent with the Tariff Act and takes into account the actual circumstances in which children work. We will continue to do so, based on available information, as the list of products is updated.

B. Comment on Statutory Authority

One comment questions the statutory authority for action by the three Departments to implement Executive Order 13126, since matters of federal acquisition policy are involved. The list of products called for in the Executive Order serves to trigger requirements for federal contractors under revisions to the Federal Acquisition Regulation, to be adopted by the Civilian Agency Acquisition Council and the Defense Acquisition Regulations Council. The authority for the Executive Order, and for the regulations that implement it, derives in part from the Federal Property and Administrative Services Act of 1949 (also known as the Procurement Act), 40 U.S.C. 471 *et seq.*, which among other things authorizes the President to prescribe federal acquisition policy and directives.

C. Comment on the Burden of Proof Once a Product Is Listed

Senator Harkin expresses concern that products might be removed from the list, if new information demonstrating the continued use of forced or indentured child labor were not regularly supplied by non-governmental sources. He suggests instead that products should remain on the list, unless new information showed that the prior use of forced or indentured child labor had been effectively addressed. In fact, the list will be updated in line with the principle supported by Senator Harkin. Once a product is placed on the list, it will remain there, unless and until the three Departments have adequate information to justify removing the product from the list. The public notice-and-comment process by which the list will be updated is described in a separate notice in today's **Federal Register**.

D. Comment on the ''Reasonable Basis to Believe'' Standard

The International Labor Rights Fund, on behalf of the other organizations in the Child Labor Coalition, requests clarification of the Executive Order's standard for placing a product on the list: That the three Departments have a ''reasonable basis to believe'' that forced or indentured child labor was used. The Fund is correct in pointing out that this threshold is relatively low. The standard is appropriate, given the nature of the list. The list does not reflect a determination that forced or indentured child labor actually was used to produce a particular product. Rather, it establishes the need for further inquiry by a federal contractor who wishes to supply the product, in order to make sure that forced or indentured child labor was not, in fact, used.

As the September 6, 2000 **Federal Register** notice explained, the three Departments have applied the ''reasonable basis to believe'' standard to develop the list. There, we identified several factors that were considered and weighed: ''the nature of the information describing the use of forced or indentured child labor; the source of the information; the date of the information; the extent of corroboration of the information by appropriate sources; and whether the information involved more than an isolated incident.'' 65 FR 54109. The three Departments have also taken into account ''whether recent, credible efforts are being made to address forced or indentured child labor in a particular country.'' 65 FR 54109.

E. Comments on Effect of Prior Executive Branch Reports Addressing Child Labor

The International Labor Rights Fund, on behalf of the Child Labor Coalition, questions whether the three Departments gave sufficient weight to prior reports addressing the use of child labor, published by the Department of Labor and the Department of State. In particular, the Fund states that the Department of Labor's series By the Sweat and Toil of Children ''should constitute prima facie evidence for purposes of identifying countries and products that should be identified pursuant to E.O. 13126.'' In fact, the three Departments did consider previously published reports and carefully reviewed information that was cited in those reports. The reports themselves, however, cannot serve as a substitute for the determination required by Executive Order. Moreover, in some instances, the reports completed in 1994 and 1995 relied upon information that may no longer be considered current, in a few cases the reports reflected information on isolated occurrences, and in others, there is information on more recent and credible

efforts to eliminate child labor in the product identified.

F. Comments on the Inclusion of Products From Burma

Several comments were received supporting the inclusion of products from Burma on the preliminary list. These comments include a letter from a number of members of Congress, specifically Representatives Kucinich, Kaptur, McHugh, Evans, Slaughter, Nadler, Sanders, Waxman, George Miller, Payne, Ackerman, DeFazio, Abercrombie, Delahunt, McDermott, Tierney, McKinney, McGovern, Lee, Moakley, Carson, Doggett, Stark, Sandlin, Baldwin, and Sherrod Brown.

G. Comments on the Exclusion of Certain Products and Countries

Various comments express a concern that the list included an insufficient number of products and countries. For example, many of the comments, including those from Representatives Tom Campbell and Tom Tancredo, object to the exclusion of several countries, on the basis that these countries have well known ''forced and indentured labor systems''. Some comments refer to Congressional testimony where specific products were named by region as examples of products ''flowing into America.'' One comment, discussed below, mentions a specific product and country.

As explained, in considering which products and countries would be placed on the preliminary list, the three Departments considered and weighed a number of factors including: The nature of the information describing the use of forced or indentured child labor; the source of the information; the date of the information; the extent of corroboration of information by appropriate sources; whether the information involved more than an isolated incident; and whether recent and credible efforts are being made to address forced or indentured child labor in a particular country or industry.

None of the comments described above provides additional information sufficient to support the inclusion of additional products and countries on the list. First, the Executive Order required the development of a list of products, by country of origin. Many of the comments named countries, but failed to identify specific products. In other cases, products were mentioned without reference to specific countries. Second, to satisfy the Executive Order standard, the Departments must have information on an individual product, in a particular country, which may be made with forced or indentured child labor. Such information was not provided in the comments received, with one exception. Third, the scope of the Executive Order is limited to forced and indentured child labor, that is labor by persons under the age of 18. The comments received refer to forced labor in a country and in some cases, sector. However, this alone does not provide sufficient information of forced or indentured child labor.

The Department of Labor welcomes future submissions providing information on specific products produced by forced or indentured child labor in specific countries. Submissions should follow the procedures outlined elsewhere in today's **Federal Register**.

As indicated, one comment did provide current and specific information: Professor Kevin Bales of Free the Slaves submitted new information concerning the use of forced or indentured child labor in the cocoa industry in the Ivory Coast. Since this product was not considered when creating the preliminary list, the International Child Labor Program of the Bureau of International Labor Affairs will consider the information as a submission for review pursuant to the newly-announced procedures for updating the current list.

H. Comments on Recent and Credible Efforts

Several comments question the factors which the three Departments took into consideration when determining which products and countries would be on the list. Senator Tom Harkin states that the presence of programs or the commitment to initiate programs aimed at eliminating child labor is not a justification to leave any product or country off the list.

The International Labor Rights Fund, on behalf of the Child Labor Coalition, makes a similar comment regarding carpets in South Asia, stating that efforts being undertaken in the industry to eliminate child labor did not justify their exclusion.

Again, in considering which products and countries would be placed on the preliminary list, the three Departments took into consideration a number of factors including the extent of recent and credible efforts undertaken in a particular country and industry aimed at addressing forced or indentured child labor. The Department of Labor will continue to assess the progress of these efforts and welcomes further information from the public on them.

I. Comments on Products From India

Senator Harkin and several other submitters specifically object to the failure to include any products from India on the list. The three Departments based their decision on the fact that the Government of India is now making extensive efforts, in collaboration with the International Labor Organization's International Program on the Elimination of Child Labor to prevent and eliminate child labor in the following sectors: hand-rolled beedi cigarettes, brassware, hand-made bricks, fireworks, footwear, hand-blown glass bangles, hand-made locks, hand-dipped matches, hand-broken quarried stones and hand-spun/hand-loomed silk. The Department of Labor will monitor the effectiveness of these efforts, and will welcome public comments on the credibility and progress of such efforts.

J. Other Comments

One comment states that the description of the products listed on the preliminary list were ''vague'' and that products should be identified by the standard category codes that are used by the Customs Service and Census Bureau. The three Departments believe that the descriptions are sufficiently specific. The Executive Order does not require the use of standard category codes in the products list. At this time, the Departments do not have reason to believe that the addition of standard category codes to the list would result in more efficient implementation of the Executive Order.

Another comment suggests that the inputs of the Department of State and Treasury into the Executive Order consultation process be described and that the joint determination process for compiling the list be disclosed. The Departments of Labor, State and Treasury consulted extensively before compiling the list, as mandated by the Executive Order. As a result, the preliminary list underwent a thorough interagency process.

Another similar comment suggests that the responsibility of implementing the Executive Order should rest with an acquisition policy agency, with advisory and support roles by the Departments of Labor, State and Treasury. In fact, as already described, the appropriate acquisition organizations are responsible for implementing the Executive Order, through revisions to the Federal Acquisition Regulation. Furthermore, the Executive Order mandates the Department of Labor, in coordination with the Departments of State and Treasury to publish a list of products.

Several comments suggest a broader scope for the Executive Order, rather than its current mandate to prohibit the acquisition of goods made with forced

or indentured child labor by the federal government. These comments are beyond the scope of the present initiative, which is intended to implement the Executive Order, not to modify it. Development of a products list, and accompanying procurement regulations, based on standards broader than those in the Executive Order would require additional public notice-and-comment procedures, as well as significant additional research and investigation by the three Departments. These steps would unnecessarily delay the implementation of the Executive Order. Without ruling out the possibility of future steps, should they be determined to be appropriate, the three Departments have chosen to proceed to finalize the product list contemplated by the Executive Order.

K. Request for Information on Carpets

In the preliminary notice, the three Departments invited comment on the measures taken in South Asia to eliminate forced and indentured labor in the carpet sector, including labeling and monitoring initiatives that are currently in place. Specifically, the Department sought public comment on the sufficiency of these initiatives and whether or not a certification or label from a credible monitoring program could adequately serve the purposes of the Executive Order. The Departments received a comment from the International Labor Rights Fund, on behalf of the Child Labor Coalition, stating that there are impressive programs dealing with child labor in the carpet sector, particularly Rugmark. The submitter also said in order to avoid giving ''a free pass'' to producers who are not participating in the innovative programs, carpets should be included on the list. Although carpets are not being included in this final list, the Departments are considering how best to address the issue raised by the International Labor Rights Fund, while continuing to encourage innovative labeling and monitoring initiatives in the carpet sector. The Department of Labor requests additional public comment on the issue raised by the International Labor Rights Fund.

L. Request for Information on Cotton and Sugarcane

The Departments requested information on whether there was forced or indentured child labor in the production of cotton and sugarcane in Pakistan. No comments were received and existing information is insufficient; therefore, the Departments have not included these products on the final list.

III. Final List of Products

The three Departments have determined that it would be appropriate to publish a final list of products that comprises the products on the preliminary list. No comments objected to the inclusion of these products. The basis for including those products on the list is set forth in detail in the Department of Labor's September 6, 2000 notice in the **Federal Register** (65 FR 54108–54112). The final list of products appears below. In addition, in today's issue of the **Federal Register**, the Department of Labor is publishing procedural guidelines for updating the final list in the future.

Based on recent, credible, and appropriately corroborated information from various sources, the Department of Labor, the Department of State, and the Department of the Treasury have concluded that there is a reasonable basis to believe that the following products, identified by their country of origin, might have been mined, produced, or manufactured by forced or indentured child labor:

Bamboo(Burma)
Beans (including yellow, soya, and green beans) (Burma)
Bricks (hand-made) (Burma, Pakistan)
Chilies (Burma)
Corn (Burma)
Pineapples (Burma)
Rice (Burma)
Rubber (Burma)
Shrimp (aquaculture)(Burma)
Sugarcane (Burma)
Teak (Burma)

Signed at Washington, D.C., this 5th day of January, 2001.

Andrew J. Samet,

Deputy Under Secretary for International Affairs.

[FR Doc. 01–953 Filed 1–17–01; 8:45 am]

BILLING CODE 4510–28–P

Federal Register

Thursday,
January 18, 2001

Part XII

General Services Administration

41 CFR Parts 101–6, et al.
Real Property Policies; Final Rule

GENERAL SERVICES ADMINISTRATION

41 CFR Parts 101–6, 101–17, 101–18, 101–19, 101–20, 101–33, 101–47, 102–71, 102–72, 102–73, 102–74, 102–75, 102–76, 102–77, 102–78, 102–79, 102–80, 102–81, 102–82

[FPMR Amendment D–97]

RIN 3090–AF95

Real Property Policies

AGENCY: Office of Government-wide Policy, GSA.

ACTION: Final rule.

SUMMARY: The General Services Administration (GSA) is adding coverage on real property policies to the Federal Management Regulation (FMR). A section has been added to each affected Federal Property Management Regulations (FPMR) part to direct readers to the additional policy coverage contained in the FMR. The FMR coverage is written in plain language to provide agencies with updated regulatory material that is easy to read and understand.

EFFECTIVE DATE: January 18, 2001.

FOR FURTHER INFORMATION CONTACT: Stanley C. Langfeld, Director, Real Property Policy Division, at (202) 501–1737.

SUPPLEMENTARY INFORMATION:

A. Background

This final rule describes the current real property policies applicable to GSA and Federal agencies to whom GSA real property authority has been delegated. The policies contained in this rule reflect the way that real property operations are currently conducted and these policies have been separated from their procedural components resulting in a more efficient and easy to understand regulation.

The policies contained in this rule were published as a proposed rule at 62 FR 42444, August 7, 1997. GSA received several comments on the proposed rule. The comments were from an individual, special interest groups, and Federal agencies. All comments were considered in the formulation of the final rule. GSA believes the final regulation is responsive to the concerns raised by all parties providing comments.

B. Executive Order 12866

The General Services Administration (GSA) has determined that this final rule is not a significant regulatory action for the purposes of Executive Order 12866.

C. Regulatory Flexibility Act

This final rule is not required to be published in the **Federal Register** for comment. Therefore, the Regulatory Flexibility Act does not apply.

D. Paperwork Reduction Act

The Paperwork Reduction Act does not apply because this final rule does not impose reporting, recordkeeping or information collection requirements which require the approval of the Office of Management and Budget pursuant to 44 U.S.C. 3501 *et seq.*

E. Small Business Regulatory Enforcement Fairness Act

This final rule is also exempt from Congressional review prescribed under 5 U.S.C. 801 since it relates solely to agency management and personnel.

List of Subjects in 41 CFR Parts 101–6, 101–17, 101–18, 101–19, 101–20, 101–33, 101–47 and 102–71 Through 102–82

Administrative practice and procedure, Blind, Concessions, Federal buildings and facilities, Fire prevention, Government property management, Homeless, Individuals with disabilities, Occupational safety and health, Parking, Real property acquisition, Security measures, Surplus Government property, Utilities.

For the reasons set forth in the preamble, GSA amends 41 CFR chapters 101 and 102 as follows:

CHAPTER 101—[AMENDED]

PART 101–6—MISCELLANEOUS REGULATIONS

1. The authority citation for part 101–6 is revised to read as follows:

Authority: 31 U.S.C. 1344(e)(1); 40 U.S.C. 486(c).

2. Amend § 101–6.300 by adding paragraph (g) to read as follows:

§ 101–6.300 Federal facility ridesharing general policy.

* * * * *

(g) For more information on Federal facility ridesharing, see 41 CFR parts 102–71 through 102–82. To the extent that any policy statements in this subpart are inconsistent with the policy statements in 41 CFR parts 102–71 through 102–82, the policy statements in 41 CFR parts 102–71 through 102–82 are controlling.

3. Amend § 101–6.600 by designating the existing text as paragraph (a) and adding a new paragraph (b) to read as follows:

§ 101–6.600 Scope of subpart.

* * * * *

(b) For more information on fire protection (firesafety) engineering, see 41 CFR parts 102–71 through 102–82. To the extent that any policy statements in this subpart are inconsistent with the policy statements in 41 CFR parts 102–71 through 102–82, the policy statements in 41 CFR parts 102–71 through 102–82 are controlling.

4. Part 101–17 is revised to read as follows:

PART 101–17—ASSIGNMENT AND UTILIZATION OF SPACE

Authority: 40 U.S.C. 285, 304c, 601 *et seq.*, 490 note; E.O. 12072, 43 FR 36869, 3 CFR, 1978 Comp., p. 213.

§ 101–17.0 Cross-reference to the Federal Management Regulation (FMR) (41 CFR chapter 102, parts 102–1 through 102–220).

For information on assignment and utilization of space, see FMR part 102–79 (41 CFR part 102–79).

PART 101–18—ACQUISITION OF REAL PROPERTY

5. The authority citation for part 101–18 is revised to read as follows:

Authority: Sec. 1–201(b), E.O. 12072, 43 FR 36869, 3 CFR, 1978 Comp., p. 213.

6. Amend § 101–18.000 by designating the existing text as paragraph (a) and adding a new paragraph (b) to read as follows:

§ 101–18.000 Scope of part.

* * * * *

(b) For more information on the acquisition of real property, see 41 CFR parts 102–71 through 102–82. To the extent that any policy statements in this part are inconsistent with the policy statements in 41 CFR parts 102–71 through 102–82, the policy statements in 41 CFR parts 102–71 through 102–82 are controlling.

PART 101–19—CONSTRUCTION AND ALTERATION OF PUBLIC BUILDINGS

7. The authority citation for part 101–19 is revised to read as follows:

Authority: 40 U.S.C. 486(c), 490 and 601–619; 86 Stat. 216.

8. Amend § 101–19.000 by designating the existing text as paragraph (a) and adding a new paragraph (b) to read as follows:

§ 101–19.000 Scope of part

* * * * *

(b) For more information on the construction and alteration of public buildings, see 41 CFR parts 102–71 through 102–82. To the extent that any policy statements in this part are

inconsistent with the policy statements in 41 CFR parts 102–71 through 102–82, the policy statements in 41 CFR parts 102–71 through 102–82 are controlling.

PART 101–20—MANAGEMENT OF BUILDINGS AND GROUNDS

9. The authority citation for part 101–20 is revised to read as follows:

Authority: 40 U.S.C. 486(c).

10. Amend § 101–20.000 by designating the existing text as paragraph (a) and adding a new paragraph (b) to read as follows:

§ 101–20.000 Scope of part.

* * * * *

(b) For more information on the management of buildings and grounds, see 41 CFR parts 102–71 through 102–82. To the extent that any policy statements in this part are inconsistent with the policy statements in 41 CFR parts 102–71 through 102–82, the policy statements in 41 CFR parts 102–71 through 102–82 are controlling.

11. The Appendix to Subchapter D is amended by adding § 101–17.000 to interim rule D–1 to read as follows:

Appendix to Subchapter D—Temporary Regulations

* * * * *

Federal Property Management Regulations; Interim Rule D–1

* * * * *

§ 101–17.000 Scope of part.

For more information on location of space, see 41 CFR parts 102–71 through 102–82. To the extent that any policy statements in this part are inconsistent with the policy statement in 41 CFR parts 102–71 through 102–82, the policy statements in 41 CFR parts 102–71 through 102–82 are controlling.

* * * * *

PART 101–33—PUBLIC UTILITIES

12. The authority citation for part 101–33 is revised to read as follows:

Authority: 40 U.S.C. 486(c).

13. Amend § 101–33.000 by designating the existing text as paragraph (a) and adding a new paragraph (b) to read as follows:

§ 101–33.000 Scope of part.

* * * * *

(b) For more information on the management of public utility services, see 41 CFR parts 102–71 through 102–82. To the extent that any policy statements in this part are inconsistent with the policy statements in 41 CFR parts 102–71 through 102–82, the policy statements in 41 CFR parts 102–71 through 102–82 are controlling.

PART 101–47—UTILIZATION AND DISPOSAL OF REAL PROPERTY

14. The authority for part 101–47 is revised to read as follows:

Authority: 40 U.S.C. 486(c).

15. Amend § 101–47.000 by designating the existing text as paragraph (a) and adding a new paragraph (b) to read as follows:

§ 101–47.000 Scope of part.

* * * * *

(b) For more information on the utilization and disposal of real property, see 41 CFR parts 102–71 through 102–82. To the extent that any policy statements in this part are inconsistent with the policy statements in 41 CFR parts 102–71 through 102–82, the policy statements in 41 CFR parts 102–71 through 102–82 are controlling.

CHAPTER 102—[AMENDED]

16. Parts 102–71 through 102–82 are added to subchapter C to read as follows:

PART 102–71—GENERAL

Sec.

102–71.5 What are the scope and philosophy of the General Services Administration's (GSA) real property policies?
102–71.10 How are these policies organized?
102–71.15 What happens if the policy statements in this part and parts 102–72 through 102–82 of this chapter conflict with policy statements in 41 CFR parts 101–6, 101–17 through 101–20, 101–33, and 101–47?
102–71.20 What definitions apply to GSA's real property policies?
102–71.25 Who must comply with GSA's real property policies?
102–71.30 How must these real property policies be implemented?
102–71.35 Are agencies allowed to deviate from GSA's real property policies?

Authority: 40 U.S.C. 486(c).

§ 102–71.5 What are the scope and philosophy of the General Services Administration's (GSA) real property policies?

GSA's real property policies contained in this part and parts 102–72 through 102–82 of this chapter apply to Federal agencies, including the GSA/Public Buildings Service (PBS), operating under, or subject to, the authorities of the Administrator of General Services. These policies cover the acquisition, management, and utilization and disposal of real property by Federal agencies that initiate and have decisionmaking authority over actions for real property services. The detailed guidance implementing these policies is contained in separate customer service guides.

§ 102–71.10 How are these policies organized?

GSA has divided its real property policies into the following functional areas:

(a) Delegation of authority;
(b) Real estate acquisition;
(c) Facility management;
(d) Real property disposal;
(e) Design and construction;
(f) Art-in-architecture;
(g) Historic preservation;
(h) Assignment and utilization of space;
(i) Safety and environmental management;
(j) Security; and
(k) Utility services.

§ 102–71.15 What happens if the policy statements in this part and parts 102–72 through 102–82 of this chapter conflict with policy statements in 41 CFR parts 101–6, 101–17 through 101–20, 101–33, and 101–47?

The policies in this part and parts 102–72 through 102–82 of this chapter apply to 41 CFR parts 101–17 through 101–20, 101–33, and 101–47. To the extent that any policy statements elsewhere in 41 CFR parts 101–17 through 101–20, 101–33, and 101–47 are inconsistent with the policy statements in this part and parts 102–72 through 102–82 of this chapter, the policy statements in this chapter are controlling.

§ 102–71.20 What definitions apply to GSA's real property policies?

The following definitions apply to GSA's real property policies:

Executive agency means any Executive department or independent establishment in the Executive branch of the Government, including any wholly owned Government corporation.

Federal agency means any Executive agency or any establishment in the legislative or judicial branch of the Government (except the Senate, the House of Representatives, and the Architect of the Capitol and any activities under his or her direction).

Federal Government real property services provider means any Federal Government entity operating under, or subject to, the authorities of the Administrator of General Services, that provides real property services to Federal agencies. This definition also includes private sector firms under contract with Federal agencies that

deliver real property services to Federal agencies. This definition excludes any entity operating under, or subject to, authorities other than those of the Administrator of General Services.

Public building means:

(1) Any building which is suitable for office and/or storage space for the use of one or more Federal agencies or mixed ownership corporations, such as Federal office buildings, post offices, customhouses, courthouses, border inspection facilities, warehouses, and any such building designated by the President. It also includes buildings of this sort that are acquired by the Federal Government under the Administrator's installment-purchase, lease-purchase, and purchase-contract authorities.

(2) *Public building* does not include buildings:

(i) On the public domain.

(ii) In foreign countries.

(iii) On Indian and native Eskimo properties held in trust by the United States.

(iv) On lands used in connection with Federal programs for agricultural, recreational, and conservation purposes.

(v) On or used in connection with river, harbor, flood control, reclamation or power projects, or for chemical manufacturing or development projects, or for nuclear production, research, or development projects.

(vi) On or used in connection with housing and residential projects.

(vii) On military installations.

(viii) On Department of Veteran's Affairs' installations used for hospital or domiciliary purposes.

(ix) Excluded by the President.

§ 102–71.25 Who must comply with GSA's real property policies?

Federal agencies operating under, or subject to, the authorities of the Administrator of General Services must comply with these policies.

§ 102–71.30 How must these real property policies be implemented?

Each Federal Government real property services provider must provide services that are in accord with the policies presented in parts 102–71 through 102–82 of this chapter. Also, Federal agencies must make the provisions of any contract with private sector real property services providers conform to the policies in parts 102–71 through 102–82 of this chapter.

§ 102–71.35 Are agencies allowed to deviate from GSA's real property policies?

Yes, see § § 102–2.60 through 102–2.110 of this chapter to request a deviation from the requirements of these real property policies.

PART 102–72—DELEGATION OF AUTHORITY

Sec.

102–72.5 What is the scope of this part?
102–72.10 What basic policy governs delegation of authority to Federal agencies?
102–72.15 What criteria must a delegation meet?
102–72.20 Are there limitations on this delegation of authority?
102–72.25 What are the different types of delegations of authority?
102–72.30 What are the different types delegations related to real estate leasing?
102–72.35 What are the requirements for obtaining an ACO delegation from GSA?
102–72.40 What are facility management delegations?
102–72.45 What are the different types of facility management delegations?
102–72.50 What are Executive agencies' responsibilities under a delegation of real property management and operation authority from GSA?
102–72.55 What are the requirements for obtaining a delegation of real property management and operation authority from GSA?
102–72.60 What are Executive agencies' responsibilities under a delegation of individual repair and alteration project authority from GSA?
102–72.65 What are the requirements for obtaining a delegation of individual repair and alteration project authority from GSA?
102–72.70 What are Executive agencies' responsibilities under a delegation of lease management authority (contracting officer representative authority) from GSA?
102–72.75 What are the requirements for obtaining a delegation of lease management authority (contracting officer representative authority) from GSA?
102–72.80 What are Executive agencies' responsibilities under a disposal of real property delegation of authority from GSA?
102–72.85 What are the requirements for obtaining a disposal of real property delegation of authority from GSA?
102–72.90 What are Executive agencies' responsibilities under a security delegation of authority from GSA?
102–72.95 What are the requirements for obtaining a security delegation of authority from GSA?
102–72.100 What are Executive agencies' responsibilities under a utility service delegation of authority from GSA?
102–72.105 What are the requirements for obtaining a utility services delegation of authority from GSA?

Authority: 40 U.S.C. 486(c), (d) and (e).

§ 102–72.5 What is the scope of this part?

The real property policies contained in this part apply to Federal agencies, including the GSA/Public Buildings Service (PBS), operating under, or subject to, the authorities of the Administrator of General Services.

§ 102–72.10 What basic policy governs delegation of authority to Federal agencies?

The Administrator of General Services may delegate and may authorize successive redelegations of the real property authority vested in the Administrator to any Federal agency.

§ 102–72.15 What criteria must a delegation meet?

Delegations must be in the Government's best interest, which means that GSA must evaluate such factors as whether a delegation would be cost effective for the Government in the delivery of space.

§ 102–72.20 Are there limitations on this delegation of authority?

Federal agencies must exercise delegated real property authority and functions according to the parameters described in each delegation of authority document, and Federal agencies may only exercise the authority of the Administrator that is specifically provided within the delegation of authority document.

§ 102–72.25 What are the different types of delegations of authority?

The basic types of GSA Delegations of Authority are:

(a) Delegation of Leasing Authority;

(b) Delegation of Real Property Management and Operation Authority;

(c) Delegation of Individual Repair and Alteration Project Authority;

(d) Delegation of Lease Management Authority (Contracting Office Representative Authority);

(e) Delegation of Administrative Contracting Officer (ACO) Authority;

(f) Delegation of Real Property Disposal Authority;

(g) Security Delegation of Authority; and

(h) Utility Services Delegation of Authority.

§ 102–72.30 What are the different types of delegations related to real estate leasing?

Delegations related to real estate leasing include the following:

(a) Categorical space delegations, Agency special purpose space delegations, and delegations to specific agencies for certain space and lands outside urban areas (see § 101–18.104 of this title).

(b) The Administrator of General Services has issued a standing delegation of authority (under a program known as ''Can't Beat GSA Leasing'') to the heads of all Federal agencies to accomplish all functions relating to leasing of general purpose space for terms of up to 20 years regardless of geographic location. This delegation includes some conditions Federal

agencies must meet when conducting the procurement themselves, such as training in lease contracting and reporting data to GSA.

(c) An Administrative Contracting Officer (ACO) delegation, in addition to lease management authority, provides Federal agencies with limited contracting officer authority to perform such duties as paying and withholding lessor rent and modifying lease provisions that don't change the lease term length or the amount of space under lease.

§ 102–72.35 What are the requirements for obtaining an ACO delegation from GSA?

When Federal agencies don't exercise the delegation of authority for general purpose space mentioned in § 102–72.30(b), GSA may consider granting an ACO delegation when Federal agencies:

(a) Occupy at least 90 percent of the building's GSA-controlled space or Federal agencies have the written concurrence of 100 percent of rent-paying occupants covered under the lease; and

(b) Have the technical capability to perform the leasing function.

§ 102–72.40 What are facility management delegations?

Facility management delegations give Executive agencies authority to operate and manage buildings day to day, to perform individual repair and alteration projects and manage real property leases.

§ 102–72.45 What are the different types of delegations related to facility management?

The principal types of delegations involved in the management of facilities are:

(a) Real property management and operation authority;

(b) Individual repair and alteration project authority; and

(c) Lease management authority (contracting officer representative authority).

§ 102–72.50 What are Executive agencies' responsibilities under a delegation of real property management and operation authority from GSA?

With this delegation, Executive agencies have the authority to operate and manage buildings day to day. Delegated functions may include building operations, maintenance, recurring repairs, minor alterations, historic preservation, concessions, and energy management of specified buildings subject to the conditions in the delegation document.

§ 102–72.55 What are the requirements for obtaining a delegation of real property management and operation authority from GSA?

An Executive agency may be delegated real property management and operation authority when it:

(a) Occupies at least 90 percent of the space in the Government-controlled facility or has the concurrence of 100 percent of the rent-paying occupants to perform these functions; and

(b) Demonstrates that it can perform the delegated real property management and operation responsibilities.

§ 102–72.60 What are Executive agencies' responsibilities under a delegation of individual repair and alteration project authority from GSA?

With this delegation of authority, Executive agencies have the responsibility to perform individual repair and alterations projects. Executive agencies are delegated repair and alterations authority for reimbursable space alteration projects up to the simplified acquisition threshold, under § 101–20.106 of this title.

§ 102–72.65 What are the requirements for obtaining a delegation of individual repair and alteration project authority from GSA?

Executive agencies may be delegated repair and alterations authority for other individual alteration projects when they demonstrate the ability to perform the delegated repair and alterations responsibilities and when such a delegation promotes efficiency and economy.

§ 102–72.70 What are Executive agencies' responsibilities under a delegation of lease management authority (contracting officer representative authority) from GSA?

When an Executive agency does not exercise the delegation of authority mentioned in § 102–72.30(b) to lease general purpose space itself, it may be delegated, upon request, lease management authority to manage the administration of one or more lease contracts awarded by GSA.

§ 102–72.75 What are the requirements for obtaining a delegation of lease management authority (contracting officer representative authority) from GSA?

An Executive agency may be delegated lease management authority when it:

(a) Occupies at least 90 percent of the building's GSA-controlled space or has the written concurrence of 100 percent of rent-paying occupants covered under the lease to perform this function; and

(b) Demonstrates the ability to perform the delegated lease management responsibilities.

§ 102–72.80 What are Executive agencies' responsibilities under a disposal of real property delegation of authority from GSA?

With this delegation, Executive agencies have the authority to utilize and dispose of excess or surplus real and related personal property and to grant approvals and make determinations subject to the conditions in the delegation document.

§ 102–72.85 What are the requirements for obtaining a disposal of real property delegation of authority from GSA?

While disposal delegations to Executive agencies are infrequent, GSA may delegate authority to them based on situations involving certain low-value properties and when they can demonstrate that they have the technical expertise to perform the disposition functions. GSA may grant special delegations of authority to Executive agencies for the utilization and disposal of certain real property through the procedures set forth in part 101–47, subpart 101–47.6, of this title.

§ 102–72.90 What are Executive agencies' responsibilities under a security delegation of authority from GSA?

With a security delegation, Executive agencies have the authority and responsibility to protect persons and property at the locations identified in the delegation document.

§ 102–72.95 What are the requirements for obtaining a security delegation of authority from GSA?

Executive agencies may be delegated security authority when any of the following conditions exist:

(a) A clear and unique security requirement;

(b) A critical national security issue;

(c) An intelligence or law enforcement mission; or

(d) The current security contractor is ineffective.

§ 102–72.100 What are Executive agencies' responsibilities under a utility service delegation of authority from GSA?

With this delegation, Executive agencies have the authority to negotiate and execute utility services contracts for periods over one year but not exceeding ten years for their use and benefit. Agencies also have the authority to intervene in utility rate proceedings to represent the consumer interests of the Federal Government, if so provided in the delegation of authority.

§ 102–72.105 What are the requirements for obtaining a utility services delegation of authority from GSA?

Executive agencies may be delegated utility services authority when they

have the technical expertise and adequate staffing.

PART 102–73—REAL ESTATE ACQUISITION

Sec.
102–73.5 What is the scope of this part?
102–73.10 What is the basic real estate acquisition policy?
102–73.15 What real estate acquisition and related services must Federal agencies provide?
102–73.20 When may Federal agencies consider leases of privately owned land and buildings to satisfy their space needs?
102–73.25 Are Federal agencies required to give priority consideration to space in buildings under the custody and control of the United States Postal Service in fulfilling Federal agency space needs?
102–73.30 On what basis must Federal agencies acquire leases?
102–73.35 Are Executive agencies required to acquire leased space by negotiation?
102–73.40 Is the CICA applicable to lease acquisition?
102–73.45 What policy must Executive agencies comply with in locating Federal facilities?
102–73.50 What historic preservation provisions must Federal agencies comply with when acquiring space by lease?
102–73.55 With whom may Federal agencies enter into lease agreements?
102–73.60 Are there any limitations on leasing certain space?
102–73.65 When may Federal agencies consider acquiring leases with purchase options?
102–73.70 What scoring rules must Federal agencies follow when considering leases and leases with purchase options?
102–73.75 When may Federal agencies consider purchase of buildings?
102–73.80 What factors must Executive agencies consider when purchasing sites?
102–73.85 What land acquisition policy must Federal agencies follow?
102–73.90 What relocation assistance policy must Federal agencies follow?
102–73.95 Is a prospectus required for all acquisition, construction or alteration projects?
102–73.100 What happens if the project exceeds the prospectus threshold?

Authority: 40 U.S.C. 486(c); Sec. 3(c), Reorganization Plan No. 18 of 1950 (40 U.S.C. 490 note); Sec. 1–201(b), E.O. 12072, 43 FR 36869, 3 CFR, 1978 Comp., p. 213.

§ 102–73.5 What is the scope of this part?

The real property policies contained in this part apply to Federal agencies, including the GSA/Public Buildings Service (PBS), operating under, or subject to, the authorities of the Administrator of General Services.

§ 102–73.10 What is the basic real estate acquisition policy?

If suitable Government-controlled space is unavailable, Executive agencies must acquire real estate and related services in an efficient and cost effective manner.

§ 102–73.15 What real estate acquisition and related services must Federal agencies provide?

Federal agencies, upon approval from GSA, may provide real estate and related services, including leases (with and without purchase options), building purchase, purchase of sites, condemnation, and relocation assistance.

§ 102–73.20 When may Federal agencies consider leases of privately owned land and buildings to satisfy their space needs?

Federal agencies may consider leases of privately owned land and buildings only when needs cannot be satisfactorily met in Government-controlled space and one or more of the following conditions exist:

(a) Leasing is more advantageous to the Government than constructing a new building, or more advantageous than altering an existing Federal building;

(b) New construction or alteration is unwarranted because demand for space in the community is insufficient, or is indefinite in scope or duration; or

(c) Federal agencies cannot provide for the completion of a new building within a reasonable time.

§ 102–73.25 Are Federal agencies required to give priority consideration to space in buildings under the custody and control of the United States Postal Service in fulfilling Federal agency space needs?

Yes, after considering the availability of GSA-controlled space, Federal agencies must extend priority consideration to available space in buildings under the custody and control of the United States Postal Service (USPS) in fulfilling Federal agency space needs.

§ 102–73.30 On what basis must Federal agencies acquire leases?

Federal agencies must acquire leases on the most favorable basis to the Federal Government, with due consideration to maintenance and operational efficiency, and at charges consistent with prevailing market rates for comparable facilities in the community.

§ 102–73.35 Are Executive agencies required to acquire leased space by negotiation?

Yes, Executive agencies must acquire leased space by negotiation, except where the sealed bid procedure is required by the Competition in Contracting Act of 1984 (CICA), as amended (41 U.S.C. 253(a)). See also 40 U.S.C. 618(b) with respect to the use of competitive procedures for the acquisition of leaseholds in buildings constructed for Federal Government use.

§ 102–73.40 Is the CICA applicable to lease acquisition?

Yes, Executive agencies must obtain full and open competition among suitable locations meeting minimum Government requirements, except as otherwise provided by CICA.

§ 102–73.45 What policy must Executive agencies comply with in locating Federal facilities?

When acquiring space by lease, Executive agencies must comply with the location policies in § 101–17.205 and § 102–79.90 (E.O. 13006 (61 FR 26071, 3 CFR, 1996 Comp., p. 195)) of this title.

§ 102–73.50 What historic preservation provisions must Federal agencies comply with when acquiring space by lease?

When acquiring space by lease, Federal agencies must comply with the provisions of section 110(a) of the National Historic Preservation Act of 1966, as amended, (16 U.S.C. 470h–2(a)), regarding the use of historic properties.

§ 102–73.55 With whom may Federal agencies enter into lease agreements?

Federal agencies, upon approval from GSA, may enter into lease agreements with any person, copartnership, corporation, or other public or private entity, which do not bind the Government for periods in excess of twenty years (40 U.S.C. 490(h)(1)). This policy does not include persons who might otherwise be barred from contracting with the Federal Government (*e.g.,* debarred or suspended contractors or Members of Congress).

§ 102–73.60 Are there any limitations on leasing certain space?

Yes, the limitations on leasing certain space are as follows:

(a) In general, Federal agencies may not lease any space to accommodate computer and telecommunications operations; secure or sensitive activities related to the national defense or security; or a permanent courtroom, judicial chamber, or administrative office for any United States court, if the average annual net rental cost of leasing such space would exceed the prospectus threshold (40 U.S.C. 606(e)).

(b) Federal agencies may lease such space only if the Administrator of General Services first determines that leasing such space is necessary to meet

requirements which cannot be met in public buildings and submits such reasons to the Committee on Environment and Public Works of the Senate and the Committee on Public Works and Transportation of the House of Representatives in accordance with 40 U.S.C. 606(e).

§ 102–73.65 When may Federal agencies consider acquiring leases with purchase options?

Agencies may consider leasing with a purchase option at or below fair market value when one or more of the following conditions exist:

(a) The purchase option offers economic and other advantages to the Government and is consistent with the Government's goals;

(b) The Government is the sole or major tenant of the building, and has a long-term need for the property; or

(c) Leasing with a purchase option is otherwise in the best interest of the Government.

§ 102–73.70 What scoring rules must Federal agencies follow when considering leases and leases with purchase options?

All Federal agencies must follow the budget scorekeeping rules for leases, capital leases, and lease-purchases identified in appendices A and B of OMB Circular A–11 (For availability, see 5 CFR 1310.3).

§ 102–73.75 When may Federal agencies consider purchase of buildings?

Agencies may consider purchase of buildings on a case-by-case basis when one or more of the following conditions exist:

(a) It is economically more beneficial to own and manage the property;

(b) There is a long-term need for the property;

(c) The property is an existing building, or a building nearing completion, that can be purchased and occupied within a reasonable time; or

(d) When otherwise in the best interests of the Government.

§ 102–73.80 What factors must Executive agencies consider when purchasing sites?

Agencies must locate proposed Federal buildings on sites that are most advantageous to the United States. Executive agencies must consider factors such as whether the site will contribute to economy and efficiency in the construction, maintenance and operation of the individual building, and how the proposed site relates to the Government's total space needs in the community. Prior to acquiring, constructing or leasing buildings (or sites for such buildings), Federal agencies must use, to the maximum extent feasible, historic properties available to the agency. In site selections, Executive agencies must consider Executive Orders 12072 (3 CFR, 1978 Comp., p. 213) and 13006 (40 U.S.C. 601a note). In addition, Executive agencies must consider all of the following:

(a) Maximum utilization of Government-owned land (including excess land) whenever it is adequate, economically adaptable to requirements and properly located, where such use is consistent with the provisions of part 101–47, subpart 101–47.8, of this title.

(b) A site adjacent to or in the proximity of an existing Federal building which is well located and is to be retained for long-term occupancy.

(c) The environmental condition of proposed sites prior to purchase: The sites must be free from contamination, unless it is otherwise determined to be in the best interests of the Government to purchase a contaminated site (*e.g.,* reuse of a site under an established ''Brownsfields'' program).

(d) Purchase options to secure the future availability of a site.

(e) All applicable policies concerning the location of Federal facilities (*e.g.,* to give first priority to locating facilities in rural areas under the Rural Development Act (7 U.S.C. 2204b–1)).

§ 102–73.85 What land acquisition policy must Federal agencies follow?

Federal agencies must follow a land acquisition policy that:

(a) Encourages and expedites the acquisition of real property by agreements with owners;

(b) Avoids litigation, including condemnation actions, where possible and relieves congestion in the courts;

(c) Provides for consistent treatment of owners; and

(d) Promotes public confidence in Federal land acquisition practices.

§ 102–73.90 What relocation assistance policy must Federal agencies follow?

Federal agencies, upon approval from GSA, must provide appropriate relocation assistance under the Uniform Relocation Assistance and Real Property Acquisition Policies Act (42 U.S.C. 4651–4655) to eligible owners and tenants of property purchased for use by Federal agencies. Appropriate relocation assistance means that the Federal agency must pay the displaced person for actual reasonable moving expenses (in moving himself, his family, business, etc.); actual direct losses of tangible personal property as a result of moving or discontinuing a business; actual reasonable expenses in searching for a replacement business or farm; and actual reasonable expenses necessary to reestablish a displaced farm, nonprofit organization, or small business at its new site, but not to exceed $10,000. The implementing regulations are found in 49 CFR part 24 (see § 105–51.000 of this title).

§ 102–73.95 Is a prospectus required for all acquisition, construction or alteration projects?

(a) No, a prospectus is not required if the dollar value of a project does not exceed the prospectus threshold. The Public Buildings Act of 1959, as amended, 40 U.S.C. 601–619, establishes a prospectus threshold, applicable to Federal agencies operating under, or subject to, the authorities of the Administrator of General Services, for the construction, alteration, purchase, and acquisition of any building to be used as a public building, and establishes a prospectus threshold to lease any space for use for public purposes. (Because of the important role the prospectus approval process plays in the budget preparation and planning process and with Congressional oversight responsibilities, Federal agencies must continue to prepare and submit prospectuses for all projects that exceed the prospectus threshold identified in § 102–73.55. All GSA delegations of leasing, alteration, and construction authority are subject to this policy.)

(b) Public Law 104–66, 109 Stat. 734, eliminated the prospectus submission requirement of the Public Buildings Act of 1959 (40 U.S.C. 606(a) and 610(b)).

§ 102–73.100 What happens if the project exceeds the prospectus threshold?

Such projects require approval by the Senate and the House of Representatives if the dollar value exceeds the prospectus threshold. In order to obtain this approval, prospectuses for such projects must be submitted to GSA and the Administrator of General Services will transmit the proposed prospectuses to Congress for consideration by the Senate and the House of Representatives.

PART 102–74—FACILITY MANAGEMENT

Sec.

102–74.5 What is the scope of this part?
102–74.10 What is the basic facility management policy?
102–74.15 What are occupancy services?
102–74.20 What responsibilities do Executive agencies have regarding occupancy services?
102–74.25 What standard in providing occupancy services must Executive agencies follow?

102–74.30 What building services must Executive agencies provide?
102–74.35 What are concessions services?
102–74.40 When must Federal agencies provide concessions services?
102–74.45 Are Federal agencies required to give blind vendors priority in operating vending facilities?
102–74.50 What are conservation programs?
102–74.55 What are asset services?
102–74.60 What asset services must an Executive agency provide?
102–74.65 What standard in providing asset services must Executive agencies follow?
102–74.70 What Federal facility ridesharing policy must Executive agencies follow?
102–74.75 What steps must Executive agencies take to promote ridesharing at Federal facilities?
102–74.80 What specific ridesharing information must Executive agencies report to the Administrator of General Services?
102–74.85 Where should Executive agencies send their Federal Facility Ridesharing Reports?
102–74.90 Are there any exceptions to these ridesharing reporting requirements?

Authority: 40 U.S.C. 486(c); E.O. 12191, 45 FR 7997, 3 CFR, 1980 Comp., p 138.

§ 102–74.5 What is the scope of this part?

The real property policies contained in this part apply to Federal agencies, including the GSA/Public Buildings Service (PBS), operating under, or subject to, the authorities of the Administrator of General Services.

§ 102–74.10 What is the basic facility management policy?

Executive agencies must manage, operate, and maintain Government-owned and leased buildings in a manner that provides for quality space and services consistent with their operational needs and that accomplish overall Government objectives. The management, operation, and maintenance of buildings and building systems must:

(a) Be cost effective and energy efficient;

(b) Be adequate to meet the agencies' missions;

(c) Meet nationally recognized standards; and

(d) Be at an appropriate level to maintain and preserve the physical plant assets, consistent with available funding.

§ 102–74.15 What are occupancy services?

Occupancy services are:

(a) Building services (see § 102–74.30);

(b) Concession services; and

(c) Conservation programs.

§ 102–74.20 What responsibilities do Executive agencies have regarding occupancy services?

Executive agencies, upon approval from GSA, must manage, administer, and enforce the requirements of agreements (such as Memoranda of Understanding, etc.) and contracts that provide for the delivery of occupancy services.

§ 102–74.25 What standard in providing occupancy services must Executive agencies follow?

Executive agencies must provide occupancy services that substantially conform to nationally recognized standards. As needed, Executive agencies may adopt other standards for buildings and services in Federally-controlled facilities in order to conform to statutory requirements and to implement cost-reduction efforts.

§ 102–74.30 What building services must Executive agencies provide?

Executive agencies, upon approval from GSA, must provide:

(a) Building services such as custodial, solid waste management (including recycling), heating and cooling, landscaping and grounds maintenance, tenant alterations, minor repairs, building maintenance, integrated pest management, signage, parking, and snow removal, at appropriate levels to support Federal agency missions; and

(b) Arrangements for raising and lowering the United States flags at appropriate times. In addition, agencies must display P.O.W. and M.I.A. flags at locations specified in 36 U.S.C. 189a on P.O.W./M.I.A. flag display days.

§ 102–74.35 What are concessions services?

Concessions services are services such as dry cleaners, gift shops, vending facilities (onsite preparation facilities, prepackaged facilities, sundry facilities, and vending machines), cafeterias, employee health units, and public pay telephones.

§ 102–74.40 When must Federal agencies provide concessions services?

Federal agencies, upon approval from GSA, must provide concessions services where building population supports such services and when the availability of existing commercial services is insufficient to meet Federal agency needs. See the Randolph-Sheppard Act, as amended, 20 U.S.C. 107 *et seq.,* and part 101–20, subpart 101–20.2, of this title.

§ 102–74.45 Are Federal agencies required to give blind vendors priority in operating vending facilities?

With certain exceptions, the Randolph-Sheppard Act requires that blind persons licensed under the provisions of the Act be authorized to operate vending facilities on any Federal property, including leased buildings. The Act imposes a positive obligation on Federal agencies to have suitable sites for vending facilities in buildings that they acquire.

§ 102–74.50 What are conservation programs?

Conservation programs are programs that improve energy and water efficiency and promote the use of solar and other renewable energy. These programs must promote and maintain an effective source reduction activity (reducing consumption of resources such as energy, water and paper), resource recovery activity (obtaining materials from the waste stream that can be recycled into new products), and reuse activity (reusing same product before disposition, such as reusing unneeded memos for scratch paper).

§ 102–74.55 What are asset services?

Asset services include repairs (as opposed to those minor repairs identified in § 102–74.30(a)), alterations, and modernizations for real property assets. Typically, these are the type of repairs and alterations necessary to preserve or enhance the value of the real property asset.

§ 102–74.60 What asset services must Executive agencies provide?

Executive agencies, upon approval from GSA, must provide asset services such as repairs (in addition to those minor repairs identified in § 102–74.30(a)), alterations, and modernizations for real property assets. Federal agencies must follow the prospectus submission and approval policy identified in § § 102–73.95 and 102–73.100.

§ 102–74.65 What standard in providing asset services must Executive agencies follow?

Executive agencies must provide asset services that maintain continuity of Government operations, continue efficient building operations, extend the useful life of buildings and related building systems, and provide a quality workplace environment that enhances employee productivity.

§ 102–74.70 What Federal facility ridesharing policy must Executive agencies follow?

Executive agencies must actively promote the use of ridesharing

(carpools, vanpools, privately leased buses, public transportation, and other multi-occupancy modes of travel) by personnel working at Federal facilities to conserve energy, reduce congestion, improve air quality, and provide an economical way for Federal employees to commute to work.

§ 102–74.75 What steps must Executive agencies take to promote ridesharing at Federal facilities?

Agencies must:

(a) Establish an annual ridesharing goal for each facility.

(b) Report to the Administrator of General Services by June 1 of each year the goals established, the means developed to achieve those goals, and the progress achieved.

(c) Cooperate with State and local ridesharing agencies where such agencies exist.

§ 102–74.80 What specific ridesharing information must Executive agencies report to the Administrator of General Services?

The head of each agency must submit to GSA by June 1 of each year a report which includes all of the following:

(a) The name, address, title, and telephone number of the agencywide Employee Transportation Coordinator (ETC).

(b) A narrative on actions taken and barriers encountered in promoting ridesharing within the agency.

(c) Information on any noticeable facility achievements.

(d) A copy of instructions issued to the agency's facility ETC's for implementing the Federal Facility Ridesharing Program.

§ 102–74.85 Where should Executive agencies send their Federal Facility Ridesharing Reports?

Agencies must send their Federal Facility Ridesharing Reports to the Real Property Policy Division (MPR), General Services Administration, 1800 F Street, NW., Washington, DC 20405.

§ 102–74.90 Are there any exceptions to these ridesharing reporting requirements?

Yes, facilities with less than 100 full-time employees or less than 100 full-time employees on the largest shift are not required to submit an annual report. Agencies must not subdivide buildings, groups of buildings, or worksites for the purpose of meeting the exception standards.

PART 102–75—REAL PROPERTY DISPOSAL

Sec.

102–75.5 What is the scope of this part?
102–75.10 What basic real property disposal policy governs Executive agencies?
102–75.15 What real property disposal services must Executive agencies provide?
102–75.20 What are Executive agencies' responsibilities concerning the utilization of excess property?
102–75.25 What are Executive agencies' responsibilities concerning real property surveys?
102–75.30 When may landholding Federal agencies grant rights for non-Federal interim use of excess property reported to GSA?
102–75.35 What are Executive agencies' responsibilities concerning the disposal of surplus property?
102–75.40 When may Executive agencies dispose of surplus real property by exchange for privately owned property?
102–75.45 When may Executive agencies outlease surplus real property for non-Federal interim use?
102–75.50 What are Federal agencies' reporting responsibilities under the Stewart B. McKinney Homeless Assistance Act (42 U.S.C. 11411)?
102–75.55 What are Executive agencies' responsibilities concerning public benefit conveyances?
102–75.60 When may Executive agencies conduct negotiated sales?
102–75.65 What are Executive agencies' responsibilities concerning negotiated sales?
102–75.70 What can Executive agencies do to eliminate the potential for windfall profits to public agencies in negotiated sales?
102–75.75 What is a negotiated sale for economic development purposes?
102–75.80 What are Executive agencies' responsibilities concerning public sales?
102–75.85 How can Federal agencies obtain related disposal services?
102–75.90 What type of appraisal value must be obtained for real property disposal transactions?
102–75.95 Are appraisals required for all real property disposal transactions?
102–75.100 Who must appraise the real property?

Authority: 40 U.S.C. 486(c), 483(a), and 484; E.O. 12512, 50 FR 18453, 3 CFR, 1985 Comp., p. 340.

§ 102–75.5 What is the scope of this part?

The real property policies contained in this part apply to Federal agencies, including the GSA/Public Buildings Service (PBS), operating under, or subject to, the authorities of the Administrator of General Services.

§ 102–75.10 What basic real property disposal policy governs Executive agencies?

Executive agencies must provide, in a timely, efficient, and cost effective manner, the full range of real estate services necessary to support their real property utilization and disposal needs. Landholding agencies must make surveys of real property under their jurisdiction to identify property that is unutilized, underutilized, or not being put to optimum use. Executive agencies must have adequate procedures in place to promote the effective utilization and disposal of such real property.

§ 102–75.15 What real property disposal services must Executive agencies provide?

Executive agencies must provide real property disposal services for real property assets under their custody and control. These real property disposal services include utilization of excess property, surveys, disposal of surplus property, public benefit conveyances, negotiated sales, public sales, related disposal services, and appraisals.

§ 102–75.20 What are Executive agencies' responsibilities concerning the utilization of excess property?

Executive agencies' responsibilities concerning the utilization of excess property are to:

(a) Increase the identification and reporting of their excess real property;

(b) Achieve maximum use of their excess real property, in terms of economy and efficiency, to minimize expenditures for the purchase of real property;

(c) Provide for the transfer of excess real property among Federal agencies, to mixed-ownership Government corporations, and to the municipal government of the District of Columbia; and

(d) Obtain assistance from GSA in resolving conflicting requests for transferring real property that the involved agencies cannot resolve.

§ 102–75.25 What are Executive agencies' responsibilities concerning real property surveys?

A landholding agency's responsibilities concerning real property surveys are to:

(a) Survey real property under its control (*i.e.,* that property reported on its financial statements) at least annually to identify property that is not needed, underutilized, or not being put to optimum use. When other needs for the property are identified or recognized, the agency must determine whether continuation of the current use or another use would better serve the public interest, considering both the Federal agency's needs and the property's location. In conducting annual reviews of their property holdings, § 101–47.801(b) of this title and other applicable GSA regulations provide guidelines for Executive agencies to consider in identifying unneeded Federal real property;

(b) Maintain its inventory of real property at the absolute minimum

consistent with economical and efficient conduct of the affairs of the agency; and

(c) Promptly report to GSA real property that it has determined to be excess.

§ 102–75.30 When may landholding Federal agencies grant rights for non-Federal interim use of excess property reported to GSA?

Landholding Federal agencies may grant rights for non-Federal interim use of excess property reported to GSA, when it is determined that such excess property is not required for the needs of any Federal agency.

§ 102–75.35 What are Executive agencies' responsibilities concerning the disposal of surplus property?

Executive agencies must obtain from GSA a determination that their excess real property is not needed for Federal use and is surplus to the needs of the Federal Government. After receiving this determination, Executive agencies, upon approval from GSA, must expeditiously make the surplus property available for acquisition by State and local governmental units and nonprofit institutions (*see* § 102–75.55) or for sale by public advertising, negotiation, or other disposal action. Executive agencies must consider the availability of real property for public purposes on a case-by-case basis, based on highest and best use and estimated fair market value. See § 101–47.202–2(b) of this title for the requirements for reporting excess real property. Where hazardous substance activity is identified, see § 101–47.304–14 of this title for required information that the disposal agency must incorporate into Invitation for Bids/Offers to Purchase.

§ 102–75.40 When may Executive agencies dispose of surplus real property by exchange for privately owned property?

Executive agencies may dispose of surplus real property by exchange for privately owned property only:

(a) For property management considerations such as boundary realignment or provision of access; or

(b) Where authorized by law, when the requesting Federal agency receives approval from the Office of Management and Budget and the appropriate oversight committees, and where the transaction offers substantial economic or unique program advantages not otherwise obtainable by any other acquisition method.

§ 102–75.45 When may Executive agencies outlease surplus real property for non-Federal interim use?

Executive agencies may outlease surplus real property for non-Federal interim use, pending its disposition, when both of the following conditions exist:

(a) The lease or permit does not exceed one year and is revocable with not more than a 30-day notice by the disposal agency; and

(b) The use and occupancy will not interfere with, delay, or impede the disposal of the property.

§ 102–75.50 What are Federal agencies' reporting responsibilities under the Stewart B. McKinney Homeless Assistance Act (42 U.S.C. 11411)?

By December 31 of each year, each landholding agency responsible for reporting must notify the Department of Housing and Urban Development (HUD) regarding the current availability status and classification of each property controlled by the agency that:

(a) Was included in a list of suitable properties published that year by HUD; and

(b) Remains available for application for use to assist the homeless, or has become available for application during that year.

§ 102–75.55 What are Executive agencies' responsibilities concerning public benefit conveyances?

Based on a highest and best use analysis, Executive agencies, upon approval from GSA, may make surplus real property available to State and local governments and certain nonprofit institutions at up to 100 percent public benefit discount for public benefit purposes. Some examples of such purposes are education, health, park and recreation, the homeless, historic monuments, public airports, highways, correctional facilities, ports, and wildlife conservation. The implementing regulations are found at § 101–47.308 of this title.

§ 102–75.60 When may Executive agencies conduct negotiated sales?

Executive agencies may conduct negotiated sales only when:

(a) The estimated fair market value of the property does not exceed $15,000; or

(b) Bid prices after advertising are unreasonable (for all or part of the property) or were not independently arrived at in open competition; or

(c) The character or condition of the property or unusual circumstances make it impractical to advertise for competitive bids and the fair market value of the property and other satisfactory terms of disposal are obtainable by negotiation; or

(d) The disposals will be to States, Commonwealth of Puerto Rico, possessions, political subdivisions thereof, or tax-supported agencies therein, and the estimated fair market value of the property and other satisfactory terms of disposal are obtainable by negotiations. Such negotiated sales to public bodies must be limited to where a public benefit will result from a negotiated sale which would not be realized from a competitive sale disposal (some examples of such purposes are administrative offices and economic development); or

(e) Negotiation is otherwise authorized by the Federal Property and Administrative Services Act of 1949 or other law, such as disposals of power transmission lines for public or cooperative power projects.

§ 102–75.65 What are Executive agencies' responsibilities concerning negotiated sales?

Executive agencies must:

(a) Obtain such competition as is feasible in all negotiations of disposals and contracts for disposal of surplus property; and

(b) Prepare and transmit an explanatory statement, identifying the circumstances of each disposal by negotiation for any real property specified in 40 U.S.C. 484(e)(6)(A), to the appropriate committees of the Congress in advance of such disposal.

§ 102–75.70 What can Executive agencies do to eliminate the potential for windfall profits to public agencies in negotiated sales?

To eliminate the potential for windfall profits to public agencies, Executive agencies must include in negotiated sales to public agencies an excess profits clause, which usually runs for 3 years. This clause states that, if the purchaser should sell or enter into agreements to sell the property within 3 years from the date of title transfer by the Federal Government, all proceeds in excess of the purchasers costs will be remitted to the Federal Government. (Put the clause found in § 101–47.4908 of this title in the offer to purchase and in the conveyance document.)

§ 102–75.75 What is a negotiated sale for economic development purposes?

A negotiated sale for economic development purposes means that the public body purchasing the property will develop or make substantial improvements to the property with the intention of reselling or leasing the property in parcels to users to advance the community's economic benefit. This type of negotiated sale is acceptable where the expected public benefits to the community are greater than the anticipated proceeds derived from a competitive public sale.

§ 102–75.80 What are Executive agencies' responsibilities concerning public sales?

Executive agencies must make available by competitive public sale any surplus property that is not disposed of by public benefit discount conveyance or by negotiated sale. Awards must be made to the responsible bidder whose bid will be most advantageous to the Government, price and other factors considered.

§ 102–75.85 How can Federal agencies obtain related disposal services?

Federal agencies with independent disposal authority are encouraged to obtain disposal related services from those agencies with expertise in real property disposal, such as GSA, as allowed by 31 U.S.C. 1535 (the Economy Act), so that agencies may remain focused on their core mission.

§ 102–75.90 What type of appraisal value must be obtained for real property disposal transactions?

For all real property transactions requiring appraisals, Executive agencies must in all cases obtain, as appropriate, an appraisal of either the fair market value or the fair annual rental value of property available for disposal.

§ 102–75.95 Are appraisals required for all real property disposal transactions?

Generally, yes, appraisals are required for all real property disposal transactions. However, appraisals are not required when either of the following conditions exist:

(a) An appraisal will serve no useful purpose (*e.g.,* legislation authorizes conveyance without monetary consideration or at a fixed price). This exception does not apply to negotiated sales to public agencies intending to use the property for a public purpose not covered by any of the special disposal provisions in § 101–47.308 of this title.

(b) The estimated fair market value of property to be offered on a competitive sale basis does not exceed $50,000.

§ 102–75.100 Who must appraise the real property?

Executive agencies must use only experienced and qualified real estate appraisers familiar with types of property to be appraised when conducting the appraisal. When an appraisal is required for the purposes of disposing of surplus property by negotiation under § 102–75.60(c), (d), or (e), contract appraisers that meet this same standard must be used. However, Executive agencies may authorize any other method of obtaining an estimate of the fair market value or the fair annual rental when the cost of obtaining such data from a contract appraiser would be out of proportion to the expected recoverable value of the property.

PART 102–76—DESIGN AND CONSTRUCTION

Sec.

102–76.5 What is the scope of this part?
102–76.10 What basic design and construction policy governs Federal agencies?
102–76.15 What are design and construction services?
102–76.20 What issues must Federal agencies consider in providing site planning and landscape design services?
102–76.25 What standards must Federal agencies meet in providing architectural and interior design services?
102–76.30 Seismic safety. [Reserved]
102–76.35 Flood plains. [Reserved]

Authority: 40 U.S.C. 486(c) (in furtherance of the Administrator's authorities under 40 U.S.C. 601–619 and elsewhere as included under 40 U.S.C. 490(a) and (c)); E.O. 12411, 48 FR 13391, 3 CFR, 1983 Comp., p. 155; E.O. 12512, 50 FR 18453, 3 CFR, 1985 Comp., p. 340.

§ 102–76.5 What is the scope of this part?

The real property policies contained in this part apply to Federal agencies, including the GSA/Public Buildings Service (PBS), operating under, or subject to, the authorities of the Administrator of General Services.

§ 102–76.10 What basic design and construction policy governs Federal agencies?

Federal agencies, upon approval from GSA, are bound by the following basic design and construction policies:

(a) Provide the highest quality services for designing and constructing new Federal facilities and for repairing and altering existing Federal facilities. These services must be timely, efficient, and cost effective.

(b) Use a distinguished architectural style and form in Federal facilities that reflects the dignity, enterprise, vigor and stability of the Federal Government.

(c) Follow nationally recognized model building codes and other applicable nationally recognized codes that govern Federal construction to the maximum extent feasible and consider local building code requirements. (See 40 U.S.C. 618 and 619.)

(d) Design Federal buildings to have a long life expectancy and accommodate periodic changes due to renovations.

(e) Make buildings cost effective, energy efficient, and accessible to and usable by the physically impaired.

(f) Provide for building service equipment that is accessible for maintenance, repair, or replacement without significantly disturbing occupied space.

(g) Consider ease of operation when selecting mechanical and electrical equipment.

(h) Agencies must follow the prospectus submission and approval policy identified in §§ 102–73.95 and 102–73.100 of this chapter.

§ 102–76.15 What are design and construction services?

Design and construction services are:

(a) Site planning and landscape design;

(b) Architectural and interior design; and

(c) Engineering systems design.

§ 102–76.20 What issues must Federal agencies consider in providing site planning and landscape design services?

In providing site planning and design services, Federal agencies must:

(a) Make the site planning and landscape design a direct extension of the building design;

(b) Make a positive contribution to the surrounding landscape;

(c) Consider requirements (other than procedural requirements) of local zoning laws and laws relating to setbacks, height, historic preservation and aesthetic qualities of a building;

(d) Identify areas for future building expansion in the architectural and site design concept for all buildings where an expansion need is identified to exist;

(e) Create a landscape design that is a pleasant, dynamic experience for occupants and visitors to Federal facilities and, where appropriate, encourage public access to and stimulate pedestrian traffic around the facilities. Coordinate the landscape design with the architectural characteristics of the building; and

(f) Comply with the requirements of the National Environmental Policy Act of 1969, as amended, 42 U.S.C. 4321 et seq., and the National Historic Preservation Act, as amended, 16 U.S.C. 470 et seq., for each project.

(g) Consider the vulnerability of the facility as well as the security needs of the occupying agencies.

§ 102–76.25 What standards must Federal agencies meet in providing architectural and interior design services?

Federal agencies must design distinctive and high quality Federal facilities that meet all of the following standards:

(a) Reflect the local architecture in buildings through the use of building form, materials, colors, or detail. Express a quality of permanence in the building interior similar to the building exterior.

(b) For new construction and major renovations, provide full access to and

use of Federally-controlled facilities for physically impaired persons. Follow the Architectural Barriers Act of 1968, 42 U.S.C. 4151–4157 (Uniform Federal Accessibility Standards (UFAS)) or Americans with Disabilities Act of 1990, Public Law 101–336, 104 Stat. 327 (ADA accessibility guidelines), whichever is more stringent. For minor renovations in existing buildings, meet minimum UFAS requirements. A more detailed explanation of these standards can be found in part 101–19, subpart 101–19.6, of this title.

(c) Use metric specifications in construction where the metric system is the accepted industry standard, and to the extent that such usage is economically feasible and practical.

(d) Provide for the design of security systems to protect Federal workers and visitors and to safeguard facilities against criminal activity and/or terrorist activity. Security design must support the continuity of Government operations during civil disturbances, natural disasters and other emergency situations.

(e) Design and construct facilities that meet or exceed the energy performance standards applicable to Federal buildings in 10 CFR part 435.

§ 102–76.30 Seismic safety. [Reserved]

§ 102–76.35 Flood plains. [Reserved]

PART 102–77—ART-IN-ARCHITECTURE

Sec.

102–77.5 What is the scope of this part?
102–77.10 What basic Art-in-architecture policy governs Federal agencies?
102–77.15 Who funds the Art-in-architecture efforts?
102–77.20 Who should Federal agencies collaborate with when commissioning and selecting art for Federal buildings?
102–77.25 Do Federal agencies have responsibilities to provide national visibility for Art-in-architecture?

Authority: 40 U.S.C. 486(c) and 601a.

§ 102–77.5 What is the scope of this part?

The real property policies contained in this part apply to Federal agencies, including the GSA/Public Buildings Service (PBS), operating under, or subject to, the authorities of the Administrator of General Services.

§ 102–77.10 What basic Art-in-architecture policy governs Federal agencies?

Federal agencies must incorporate fine arts as an integral part of the total building concept when designing new Federal buildings, and when making substantial repairs and alterations to existing Federal buildings, as appropriate. The selected fine arts, including painting, sculpture, and artistic work in other media, must reflect the national cultural heritage and emphasize the work of living American artists.

§ 102–77.15 Who funds the Art-in-architecture efforts?

To the extent not prohibited by law, Federal agencies must fund the Art-in-architecture efforts by allocating a portion of the estimated cost of constructing or purchasing new Federal buildings, or of completing major repairs and alterations of existing buildings. Funding for qualifying projects, including new construction, building purchases, other building acquisition, or prospectus-level repair and alteration projects, must be in a range determined by the Administrator of General Services.

§ 102–77.20 Who should Federal agencies collaborate with when commissioning and selecting art for Federal buildings?

To the maximum extent practicable, Federal agencies should seek the support and involvement of local citizens in selecting appropriate artwork. Federal agencies should collaborate with the artist and community to produce works of art that reflect the cultural, intellectual, and historic interests and values of a community. In addition, Federal agencies should work collaboratively with the architect of the building, art professionals, when commissioning and selecting art for Federal buildings. Federal agencies should commission artwork that is diverse in style and media.

§ 102–77.25 Do Federal agencies have responsibilities to provide national visibility for Art-in-architecture?

Yes, Federal agencies should provide Art-in-architecture that receives appropriate national and local visibility to facilitate participation by a large and diverse group of artists representing a wide variety of types of artwork.

PART 102–78—HISTORIC PRESERVATION

Sec.

102–78.5 What is the scope of this part?
102–78.10 What basic historic preservation policy governs Federal agencies?
102–78.15 What are historic properties?
102–78.20 Are Federal agencies required to identify historic properties?
102–78.25 What is an undertaking?
102–78.30 What are consulting parties?
102–78.35 Are Federal agencies required to involve consulting parties in their historic preservation activities?
102–78.40 What responsibilities do Federal agencies have when an undertaking adversely affects a historic or cultural property?
102–78.45 What are Federal agencies' responsibilities concerning nomination of properties to the National Register?
102–78.50 What historic preservation services must Federal agencies provide?
102–78.55 For which properties must Federal agencies provide historic preservation services?
102–78.60 What are Federal agencies' historic preservation responsibilities when acquiring leased space?
102–78.65 What are Federal agencies' historic preservation responsibilities when disposing of real property under their control?
102–78.70 What are an agency's historic preservation responsibilities when disposing of another Federal agency's real property?

Authority: 16 U.S.C. 470 h–2; 40 U.S.C. 486(c) and 490(a).

§ 102–78.5 What is the scope of this part?

The real property policies contained in this part apply to Federal agencies, including the GSA/Public Buildings Service (PBS), operating under, or subject to, the authorities of the Administrator of General Services. The policies in this part are in furtherance of GSA's preservation program under section 110 of the National Historic Preservation Act (16 U.S.C. 470) and apply to properties under the jurisdiction or control of the Administrator and to any Federal agencies operating, maintaining or protecting such properties under a delegation of authority from the Administrator.

§ 102–78.10 What basic historic preservation policy governs Federal agencies?

To protect, enhance and preserve historic and cultural property under their control, Federal agencies must consider the effects of their undertakings on historic and cultural properties and give the Advisory Council on Historic Preservation (Advisory Council), the State Historic Preservation Officer (SHPO), and other consulting parties a reasonable opportunity to comment regarding the proposed undertakings.

§ 102–78.15 What are historic properties?

Historic properties are those that are included in, or eligible for inclusion in, the National Register of Historic Places (National Register) as more specifically defined at 36 CFR 800.16.

§ 102–78.20 Are Federal agencies required to identify historic properties?

Yes, Federal agencies must identify all National Register or National

Register-eligible historic properties under their control. In addition, Federal agencies must apply National Register Criteria (36 CFR part 63) to properties that have not been previously evaluated for National Register eligibility and that may be affected by the undertakings of Federally sponsored activities.

§ 102–78.25 What is an undertaking?

The term undertaking means a project, activity, or program under the direct or indirect jurisdiction of a Federal agency, including those:

(a) Carried out by or on behalf of the agency;

(b) Carried out with Federal financial assistance;

(c) Requiring a Federal permit, license, or approval; and

(d) Subject to State or local regulation administered pursuant to a delegation or approval by a Federal agency.

§ 102–78.30 What are consulting parties?

As more particularly described in 36 CFR 800.2(c), consulting parties are those parties having consultative roles in the Section 106 process (*i.e.,* Section 106 of the National Historic Preservation Act) that requires Federal agencies to take into account the effects of their undertakings on historic properties and afford the Council a reasonable opportunity to comment on such undertakings. Specifically, consulting parties include the State Historic Preservation Officer; Tribal Historic Preservation Officer; Indian tribes and Native Hawaiian organizations; Representatives of local governments; Applicants for Federal assistance, permits, licenses and other approvals; and other individuals and organizations with a demonstrated interest in the undertaking.

§ 102–78.35 Are Federal agencies required to involve consulting parties in their historic preservation activities?

Yes, Federal agencies must solicit information from consulting parties to carry out their responsibilities under historic and cultural preservation laws and regulations. Federal agencies must invite the participation of consulting parties through their normal public notification processes.

§ 102–78.40 What responsibilities do Federal agencies have when an undertaking adversely affects a historic or cultural property?

Federal agencies must not perform an undertaking that could alter, destroy, or modify an historic or cultural property until they have consulted with the SHPO and the Advisory Council. Federal agencies must minimize all adverse impacts of their undertakings on historic or cultural properties to the extent that is feasible and prudent. Federal agencies must follow the specific guidance on the protection of historic and cultural properties in 36 CFR part 800.

§ 102–78.45 What are Federal agencies' responsibilities concerning nomination of properties to the National Register?

Federal agencies must nominate to the National Register all properties under their control determined eligible for inclusion in the National Register.

§ 102–78.50 What historic preservation services must Federal agencies provide?

Federal agencies must provide the following historic preservation services:

(a) Prepare a Historic Building Preservation Plan for each National Register or National Register-eligible property under their control. When approved by consulting parties, such plans become a binding management plan for the property; and

(b) Investigate for historic and cultural factors all proposed sites for direct and leased construction.

§ 102–78.55 For which properties must Federal agencies assume historic preservation responsibilities?

Federal agencies must assume historic preservation responsibilities for real property assets under their custody and control. Federal agencies occupying space in buildings under the custody and control of other Federal agencies must obtain approval from the agency having custody and control of the building.

§ 102–78.60 What are Federal agencies historic preservation responsibilities when acquiring leased space?

In leasing historic property, Federal agencies must give a preference to such leasing actions in accordance with hierarchy of consideration identified in § 102–79.90 of this chapter.

§ 102–78.65 What are Federal agencies' historic preservation responsibilities when disposing of real property under their control?

Federal agencies must:

(a) To the extent practicable, establish and implement alternatives for historic properties, including adaptive reuse, that are not needed for current or projected agency purposes. Agencies are required to get the Secretary of Interior's approval of the plans of transferees of surplus Federally-owned historic properties.

(b) Review all proposed excess actions to identify any properties listed on or eligible for listing on the National Register. Federal agencies must not perform disposal actions that could result in the alteration, destruction, or modification of an historic or cultural property until Federal agencies have consulted with the SHPO and the Advisory Council.

§ 102–78.70 What are an agency's historic preservation responsibilities when disposing of another Federal agency's real property?

Federal agencies must not accept property declared excess by another Federal agency nor act as an agent for transfer or sale of such properties until the holding agency provides evidence that the Federal agency has met its National Historic Preservation Act responsibilities.

PART 102–79—ASSIGNMENT AND UTILIZATION OF SPACE

Sec.

102–79.5 What is the scope of this part?
102–79.10 What basic assignment and utilization of space policy governs an Executive agency?
102–79.15 What objectives must an Executive agency strive to meet in providing assignment and utilization of space services?
102–79.20 What standard must Executive agencies promote when assigning space?
102–79.25 Can Federal agencies allot space in Federal buildings for the provision of child care services?
102–79.30 Can Federal agencies allot space in Federal buildings for establishing fitness centers?
102–79.35 What elements must Federal agencies address in their planning effort for establishing fitness programs?
102–79.40 Can Federal agencies allot space in Federal buildings to Federal credit unions?
102–79.45 What type of services may Federal agencies provide without charge to Federal credit unions?
102–79.50 What standard must Executive agencies promote in their utilization of space?
102–79.55 Are agencies required to use historic properties available to the agency?
102–79.60 Are Executive agencies required to give first priority to the location of new offices and other facilities in rural areas?
102–79.65 When an agency's mission and program requirements call for the location in an urban area, are Executive agencies required to give first consideration to central business areas?
102–79.70 What is a central business area?
102–79.75 Who is responsible for identifying the delineated area within which a Federal agency wishes to locate specific activities?
102–79.80 Who must approve the final delineated area?
102–79.85 Are Executive agencies required to consider whether the central business area will provide for adequate competition when acquiring leased space?

102–79.90 Are Executive agencies required to give preference to historic properties when acquiring leased space?
102–79.95 Automated external defibrillators. [Reserved]

Authority: 40 U.S.C. 486(c); E.O. 12411, 48 FR 13391, 3 CFR, 1983 Comp., p. 155; and E.O. 12512, 50 FR 18453, 3 CFR, 1985 Comp., p. 340.

§ 102–79.5 What is the scope of this part?

The real property policies contained in this part apply to Federal agencies, including the GSA/Public Buildings Service (PBS), operating under, or subject to, the authorities of the Administrator of General Services.

§ 102–79.10 What basic assignment and utilization of space policy governs an Executive agency?

Executive agencies must provide a quality workplace environment that supports program operations, preserves the value of real property assets, meets the needs of the occupant agencies, and provides child care and physical fitness facilities in the workplace when adequately justified. An Executive agency must promote maximum utilization of Federal workspace, consistent with mission requirements, to maximize its value to the Government.

§ 102–79.15 What objectives must an Executive agency strive to meet in providing assignment and utilization of space services?

Executive agencies must provide assignment and utilization services that will maximize the value of Federal real property resources and improve the productivity of the workers housed therein.

§ 102–79.20 What standard must Executive agencies promote when assigning space?

Executive agencies must promote the optimum use of space for each assignment at the minimum cost to the Government, provide quality workspace that is delivered and occupied in a timely manner, and assign space based on mission requirements.

§ 102–79.25 Can Federal agencies allot space in Federal buildings for the provision of child care services?

Yes, in accordance with 40 U.S.C. 490b, Federal agencies can allot space in Federal buildings to individuals or entities who will provide child care services to Federal employees if:

(a) Such space is available;

(b) Such agency determines that such space will be used to provide child care services to children of whom at least 50 percent have one parent or guardian who is a Federal Government employee; and

(c) Such agency determines that such individual or entity will give priority for available child care services in such space to Federal employees.

§ 102–79.30 Can Federal agencies allot space in Federal buildings for establishing fitness centers?

Yes, in accordance with 5 U.S.C. 7901, Federal agencies can allot space in Federal buildings for establishing fitness programs.

§ 102–79.35 What elements must Federal agencies address in their planning effort for establishing fitness programs?

Federal agencies must address the following elements in their planning effort for establishing fitness programs:

(a) A survey indicating employee interest in the program;

(b) A three to five year implementation plan demonstrating long-term commitment to physical fitness/health for employees;

(c) A health related orientation, including screening procedures, individualized exercise programs, identification of high-risk individuals, and appropriate follow-up activities;

(d) Identification of a person skilled in prescribing exercise to direct the fitness program;

(e) An approach which will consider key health behavior related to degenerative disease, including smoking and nutrition;

(f) A modest facility that includes only the essentials necessary to conduct a program involving cardiovascular and muscular endurance, strength activities, and flexibility;

(g) Provision for equal opportunities for men and women, and all employees, regardless of grade level.

§ 102–79.40 Can Federal agencies allot space in Federal buildings to Federal credit unions?

Yes, in accordance with 12 U.S.C. 1770, Federal agencies may allot space in Federal buildings to Federal credit unions without charge for rent or services if:

(a) At least 95 percent of the membership of the credit union to be served by the allotment of space is composed of persons who either are presently Federal employees or were Federal employees at the time of admission into the credit union, and members of their families; and

(b) If space is available.

§ 102–79.45 What type of services may Federal agencies provide without charge to Federal credit unions?

Federal agencies may provide without charge to Federal credit union services such as:

(a) Lighting;

(b) Heating and cooling;

(c) Electricity;

(d) Office furniture;

(e) Office machines and equipment;

(f) Telephone service (including installation of lines and equipment and other expenses associated with telephone service); and

(g) Security systems (including installation and other expenses associated with security systems).

§ 102–79.50 What standard must Executive agencies promote in their utilization of space?

Executive agencies, acquiring or utilizing Federally owned and leased space under the Federal Property and Administrative Services Act of 1949, as amended, must promote efficient utilization of space according to GSA standards. In order to maximize the use of vacant space, use existing GSA-controlled space to the maximum extent practical. After considering the availability of GSA-controlled space, extend priority consideration to available space in buildings under the custody and control of the U.S. Postal Service before acquiring additional space. Where there is no Federal agency space need, Executive agencies must make every effort to maximize the productive use of vacant space through out-granting (for example, outlease, permit, license) to non-Federal entities to the extent authorized by law.

§ 102–79.55 Are agencies required to use historic properties available to the agency?

Yes, Federal agencies must assume responsibility for the preservation of the historic properties they own or control. Prior to acquiring, constructing or leasing buildings, agencies must use, to the maximum extent feasible, historic properties already owned or leased by the agency (16 U.S.C. 470h–2).

§ 102–79.60 Are Executive agencies required to give first priority to the location of new offices and other facilities in rural areas?

Yes, Executive agencies must give first priority to the location of new offices and other facilities in rural areas (7 U.S.C. 2204b–1), unless their mission or program requirements call for locations in an urban area.

§ 102–79.65 When an agency's mission and program requirements call for the location in an urban area, are Executive agencies required to give first consideration to central business areas?

Yes, when agency mission and program requirements call for location in an urban area and new space must be acquired, constructed or leased,

Executive agencies must give first consideration to central business areas (CBAs) and other areas designated by local officials (Executive Order 12072 (43 FR 36869, 3 CFR, 1978 Comp., p. 213.) and Executive Order 13006 (61 FR 26071, 3 CFR, 1996 Comp., p. 195)).

§ 102–79.70 What is a central business area?

Central business area means the centralized community business area and adjacent areas of similar character, including other specific areas which may be recommended by local officials in accordance with Executive Order 12072.

§ 102–79.75 Who is responsible for identifying the delineated area within which a Federal agency wishes to locate specific activities?

Each Federal agency is responsible for identifying the delineated area within which it wishes to locate specific activities, consistent with its mission and program requirements, and in accordance with all applicable laws, regulations, and Executive orders.

§ 102–79.80 Who must approve the final delineated area?

Federal agencies conducting the procurement must approve the final delineated area for site acquisitions and lease actions and must confirm that the final delineated area complies with the requirements of all applicable laws, regulations, and Executive orders.

§ 102–79.85 Are Executive agencies required to consider whether the central business area will provide for adequate competition when acquiring leased space?

In accordance with the Competition in Contracting Act of 1984 (CICA), as amended, (41 U.S.C. 253(a)) Executive agencies must consider whether restricting the delineated area for obtaining leased space to the central business area will provide for adequate competition when acquiring leased space. Where an Executive agency determines that the delineated area must be expanded beyond the CBA in order to provide adequate competition, the agency may expand the delineated area in consultation with local officials. Executive agencies must continue to include the CBA in such expanded areas.

§ 102–79.90 Are Executive agencies required to give preference to historic properties when acquiring leased space?

Yes, section 110 of the National Historic Preservation Act of 1966, as amended (16 U.S.C. 470h–2), requires that agencies first consider historic properties already under agency control. However, the Act also provides that prior to acquiring, constructing or leasing new space, and subject to the requirements of Section 601 of Title VI of the Rural Development Act of 1972, as amended (7 U.S.C. 2204b–1), Executive Order 13006 and Executive Order 12072, Executive agencies must first consider historic properties within historic districts when locating Federal facilities. If no such suitable historic property is available, Executive agencies must then consider other developed or undeveloped sites within historic districts. Finally, Executive agencies must consider suitable historic properties outside of historic districts, if no suitable site exists within a historic district.

§ 102–79.95 Automated external defibrillators. [Reserved]

PART 102–80—SAFETY AND ENVIRONMENTAL MANAGEMENT

Sec.

102–80.5 What is the scope of this part?
102–80.10 What are the basic safety and environmental management policies for real property?
102–80.15 What are Federal agencies' responsibilities concerning the assessment and management of asbestos?
102–80.20 What are Federal agencies' responsibilities concerning the abatement of radon?
102–80.25 What are Federal agencies' responsibilities concerning the management of indoor air quality?
102–80.30 What are Federal agencies' responsibilities concerning lead?
102–80.35 What are Federal agencies' responsibilities concerning the monitoring of hazardous materials and wastes?
102–80.40 What are Federal agencies' responsibilities concerning the management of underground storage tanks?
102–80.45 What are Federal agencies' responsibilities concerning fire prevention and fire protection engineering?
102–80.50 Are Federal agencies responsible for identifying/estimating risks and for appropriate reduction strategies?
102–80.55 Are Federal agencies responsible for performing facility assessments?
102–80.60 Are Federal agencies responsible for managing the execution of risk reduction projects?
102–80.65 What are Federal agencies' responsibilities concerning the investigation of incidents, such as fires, accidents, injuries, and environmental incidents?
102–80.70 Are Federal agencies responsible for informing their tenants of the condition and management of their facility safety and environment?
102–80.75 Who assesses environmental issues in Federal construction and lease construction projects?

Authority: 40 U.S.C. 486(c) and 490.

§ 102–80.5 What is the scope of this part?

The real property policies contained in this part apply to Federal agencies, including the GSA/Public Buildings Service (PBS), operating under, or subject to, the authorities of the Administrator of General Services. The responsibilities for safety and environmental management under this part are intended to apply to GSA or those Federal agencies operating in GSA space pursuant to a GSA delegation of authority.

§ 102–80.10 What are the basic safety and environmental management policies for real property?

The basic safety and environmental management policies for real property are that Federal agencies must:

(a) Provide for a safe and healthful work environment for Federal employees and the visiting public;

(b) Protect Federal real and personal property;

(c) Promote mission continuity;

(d) Provide reasonable safeguards for emergency forces if an incident occurs;

(e) Assess risk;

(f) Make decisionmakers aware of risks; and

(g) Act promptly and appropriately in response to risk.

§ 102–80.15 What are Federal agencies' responsibilities concerning the assessment and management of asbestos?

Federal agencies have the following responsibilities concerning the assessment and management of asbestos:

(a) Inspect and assess buildings for the presence and condition of asbestos-containing materials. Space to be leased must be free of all asbestos containing materials, except undamaged asbestos flooring in the space or undamaged boiler or pipe insulation outside the space, in which case an asbestos

management program conforming to Environmental Protection Agency (EPA) guidance must be implemented;

(b) Manage in-place asbestos that is in good condition and not likely to be disturbed;

(c) Abate damaged asbestos, and asbestos likely to be disturbed. Federal agencies must perform a pre-alteration asbestos assessment for activities that may disturb asbestos;

(d) Not use asbestos in new construction, renovation/modernization or repair of their owned or leased space. Unless approved by GSA, Federal agencies must not obtain space with asbestos through purchase, exchange, transfer, or lease, except as identified in paragraph (a) of this section; and

(e) Communicate all written and oral asbestos information about the leased space to tenants.

§ 102–80.20 What are Federal agencies' responsibilities concerning the abatement of radon?

Federal agencies have the following responsibilities concerning the abatement of radon in space when radon levels exceed current EPA standards:

(a) Retest abated areas and make lessors retest, as required, abated areas to adhere to EPA standards; and

(b) Test non-public water sources (in remote areas for projects such as border stations) for radon according to EPA guidance. Radon levels that exceed current applicable EPA standards must be mitigated. Federal agencies must retest, as required, to adhere to EPA standards.

§ 102–80.25 What are Federal agencies' responsibilities concerning the management of indoor air quality?

Federal agencies must assess indoor air quality of buildings as part of their safety and environmental facility assessments. Federal agencies must respond to tenant complaints on air quality and take appropriate corrective action where air quality does not meet applicable standards.

§ 102–80.30 What are Federal agencies' responsibilities concerning lead?

Federal agencies have the following responsibilities concerning lead in buildings:

(a) Test space for lead-based paint in renovation projects that require sanding, welding or scraping painted surfaces.

(b) Not remove lead based paint from surfaces in good condition.

(c) Test all painted surfaces for lead in proposed or existing child care centers.

(d) Abate lead-based paint found in accordance with Department of Housing and Urban Development (HUD) Lead-Based Paint Guidelines, available by writing to HUD USER, P.O. Box 6091, Rockville, MD, 20850.

(e) Test potable water for lead in all drinking water outlets in child care centers.

(f) Take corrective action when lead levels exceed the HUD Guidelines.

§ 102–80.35 What are Federal agencies' responsibilities concerning the monitoring of hazardous materials and wastes?

Federal agencies' responsibilities concerning the monitoring of hazardous materials and wastes are to:

(a) Monitor the transport, use, and disposition of hazardous materials and waste in buildings to provide for compliance with GSA, Occupational Safety and Health Administration (OSHA), Department of Transportation, EPA, and applicable State and local requirements. In addition to those operating in GSA space pursuant to a delegation of authority, tenants in GSA space must comply with these requirements.

(b) In leased space, include in all agreements with the lessor requirements that hazardous materials kept in leased space are kept and maintained according to applicable Federal, State, and local environmental regulations.

§ 102–80.40 What are Federal agencies' responsibilities concerning the management of underground storage tanks?

Federal agencies have the following responsibilities concerning the management of underground storage tanks in real property:

(a) Register, manage and close underground storage tanks, including heating oil and fuel oil tanks, in accordance with GSA, EPA, and applicable State and local requirements.

(b) Require the party responsible for tanks they use but don't own to follow these requirements and to be responsible for the cost of compliance.

§ 102–80.45 What are Federal agencies' responsibilities concerning fire prevention and fire protection engineering?

Federal agencies must follow accepted fire prevention practices in operating and managing buildings. Federally-owned buildings are generally exempt from State and local code requirements in fire protection; however, in accordance with 40 U.S.C. 619, each building constructed or altered by a Federal agency must be constructed or altered, to the maximum extent feasible, in compliance with one of the nationally recognized model building codes and with other nationally recognized codes. Leased buildings are subject to local requirements and inspection. Federal agencies must use the National Fire Protection Association (NFPA) codes and standards (obtained by writing to NFPA, 11 Tracy Drive, Avon, MA 02322.) as a guide for their building operations.

§ 102–80.50 Are Federal agencies responsible for identifying/estimating risks and for appropriate reduction strategies?

Yes, Federal agencies must identify and estimate safety and environmental management risks and appropriate reduction strategies for buildings. Federal agencies occupying as well as operating buildings must identify any safety and environmental management risks and report or correct the situation, as appropriate.

§ 102–80.55 Are Federal agencies responsible for performing facility assessments?

Yes, Federal agencies must evaluate facilities to comply with GSA's safety and environmental program and applicable Federal, State and local environmental laws and regulations. Federal agencies should conduct these evaluations in accordance with schedules that are compatible with repair and alteration and leasing operations.

§ 102–80.60 Are Federal agencies responsible for managing the execution of risk reduction projects?

Yes, Federal agencies must manage the execution of risk reduction projects in buildings they operate. Federal agencies must identify and take appropriate action to eliminate hazards and regulatory noncompliance.

§ 102–80.65 What are Federal agencies' responsibilities concerning the investigation of incidents, such as fires, accidents, injuries, and environmental incidents?

Federal agencies have the following responsibilities concerning the investigation of incidents, such as fires, accidents, injuries, and environmental incidents in buildings they operate:

(a) Investigate all incidents regardless of severity.

(b) Form Boards of Investigation for incidents resulting in serious injury, death, or significant property losses.

§ 102–80.70 Are Federal agencies responsible for informing their tenants of the condition and management of their facility safety and environment?

Yes, Federal agencies must inform their tenants of the condition and management of their facility safety and environment. Agencies operating GSA buildings must report any significant

facility safety or environmental concerns to GSA.

§ 102–80.75 Who assesses environmental issues in Federal construction and lease construction projects?

Federal agencies must assess required environmental issues throughout planning and project development, so that the environmental impacts of a project are considered during the decisionmaking process.

PART 102–81—SECURITY

Sec.
102–81.5 What is the scope of this part?
102–81.10 What basic security policy governs Federal agencies?
102–81.15 Who is responsible for upgrading and maintaining security standards in each Federally-owned facility?

Authority: 40 U.S.C. 318a, 486(c) and 490.

§ 102–81.5 What is the scope of this part?

The real property policies contained in this part apply to Federal agencies, including the GSA/Public Buildings Service (PBS), operating under, or subject to, the authorities of the Administrator of General Services.

§ 102–81.10 What basic security policy governs Federal agencies?

Federal agencies on Federal property under the charge and control of the Administrator and having a security delegation of authority from the Administrator must provide for the security and protection of the real estate they occupy, including the protection of persons within the property.

§ 102–81.15 Who is responsible for upgrading and maintaining security standards in each Federally-owned facility?

In a June 28, 1995, Presidential Policy Memorandum for Executive Departments and Agencies, entitled, ''Upgrading Security at Federal Facilities'' (see the Weekly Compilation of Presidential Documents, vol. 31, p. 1148), the President directed that Executive agencies must, where feasible, upgrade and maintain security in facilities they own or lease under their own authority to the minimum standards specified in the Department of Justice's June 28, 1995 study entitled ''Vulnerability Assessment of Federal Facilities.'' The study may be obtained by writing to the Superintendent of Documents, P. O. Box 371954, Pittsburgh, PA, 15250–7954.

PART 102–82—UTILITY SERVICES

Sec.
102–82.5 What is the scope of this part?
102–82.10 What basic utility services policy govern Executive agencies?
102–82.15 What utility services must Executive agencies provide?
102–82.20 What are Executive agencies' rate intervention responsibilities?
102–82.25 What are Executive agencies' responsibilities concerning the procurement of utility services?

Authority: 40 U.S.C. 481(a) and 486(c).

§ 102–82.5 What is the scope of this part?

The real property policies contained in this part apply to Federal agencies, including the GSA/Public Buildings Service (PBS), operating under, or subject to, the authorities of the Administrator of General Services.

§ 102–82.10 What basic utility services policy govern Executive agencies?

Executive agencies procuring, managing or supplying utility services under the Federal Property and Administrative Services Act of 1949 must provide or procure services that promote economy and efficiency with due regard to the mission responsibilities of the agencies concerned.

§ 102–82.15 What utility services must Executive agencies provide?

Executive agencies must negotiate with public utilities to procure utility services and, where appropriate, provide rate intervention services in proceedings (see § § 102–72.100 and 102-72.105 of this chapter) before Federal and State utility regulatory bodies.

§ 102–82.20 What are Executive agencies' rate intervention responsibilities?

Where the consumer interests of the Federal Government will be significantly affected and upon receiving a delegation of authority from GSA, Executive agencies must provide representation in proceedings involving utility services before Federal and State regulatory bodies. Specifically, these responsibilities include instituting formal or informal action before Federal and State regulatory bodies to contest the level, structure, or applicability of rates or service terms of utility suppliers. The Secretary of Defense is independently authorized to take such actions without a delegation from GSA when the Secretary determines such actions to be in the best interests of national security.

§ 102–82.25 What are Executive agencies' responsibilities concerning the procurement of utility services?

Executive agencies, operating under a utility services delegation from GSA, or the Secretary of Defense when the Secretary determines it to be in the best interests of national security, must provide for the procurement of utility services (such as commodities and utility rebate programs), as required, and must procure from sources of supply that are the most advantageous to the Federal Government in terms of economy, efficiency, reliability, or quality of service. Executive agencies, upon receiving a delegation of authority from GSA, may enter into contracts for utility services for periods not exceeding ten years (40 U.S.C. 481).

Dated: December 21, 2000.

Thurman M. Davis, Sr.,

Acting Administrator of General Services.

[FR Doc. 01–180 Filed 1–17–01; 8:45 am]

BILLING CODE 6820–23–P

Federal Register

Thursday,
January 18, 2001

Part XIII

Department of Housing and Urban Development

Regulatory Waiver Requests Granted for the Third Quarter of Calendar Year 2000; Notice

DEPARTMENT OF HOUSING AND URBAN DEVELOPMENT

[Docket No. FR–4591–N–03]

Regulatory Waiver Requests Granted for the Third Quarter of Calendar Year 2000

AGENCY: Office of the Secretary, HUD.

ACTION: Public Notice of the Granting of Regulatory Waivers from July 1, 2000 through September 30, 2000.

SUMMARY: Section 106 of the Department of Housing and Urban Development Reform Act of 1989 (the ''HUD Reform Act''), requires HUD to publish quarterly **Federal Register** notices of all regulatory waivers that HUD has approved. Each notice must cover the quarterly period since the most recent **Federal Register** notice. The purpose of this notice is to comply with the requirements of section 106 of the HUD Reform Act. This notice contains a list of regulatory waivers granted by HUD during the quarter beginning on July 1, 2000 and ending on September 30, 2000.

FOR FURTHER INFORMATION CONTACT: For general information about this notice, contact Camille E. Acevedo, Associate General Counsel for Legislation and Regulations, Room 10276, Department of Housing and Urban Development, 451 Seventh Street, SW., Washington, DC 20410; telephone (202) 708–3055 (this is not a toll-free number). Hearing or speech-impaired persons may access this number via TTY by calling the toll-free Federal Information Relay Service at 1–800–877–8391.

For information concerning a particular waiver action for which public notice is provided in this document, contact the person whose name and address follows the description of the waiver granted in the accompanying list of waiver-grant actions.

SUPPLEMENTARY INFORMATION: As part of the Housing and Urban Development Reform Act of 1989 (the ''HUD Reform Act''), the Congress adopted, at HUD's request, legislation to limit and control the granting of regulatory waivers by HUD. Section 106 of the HUD Reform Act added a new section 7(q) to the Department of Housing and Urban Development Act (42 U.S.C. 3535(q)), which provides that:

1. Any waiver of a regulation must be in writing and must specify the grounds for approving the waiver;

2. Authority to approve a waiver of a regulation may be delegated by the Secretary only to an individual of Assistant Secretary rank or equivalent rank, and the person to whom authority to waive is delegated must also have authority to issue the particular regulation to be waived;

3. Not less than quarterly, the Secretary must notify the public of all waivers of regulations that HUD has approved, by publishing a notice in the **Federal Register**. These notices (each covering the period since the most recent previous notification) shall:

a. Identify the project, activity, or undertaking involved;

b. Describe the nature of the provision waived, and the designation of the provision;

c. Indicate the name and title of the person who granted the waiver request;

d. Describe briefly the grounds for approval of the request;

e. State how additional information about a particular waiver grant action may be obtained.

Section 106 of the HUD Reform Act also contains requirements applicable to waivers of HUD handbook provisions that are not relevant to the purpose of this notice. Today's document follows publication of HUD's Statement of Policy on Waiver of Regulations and Directives issued by HUD on April 22, 1991 (56 FR 16337). This notice covers HUD's waiver-grant activity from July 1, 2000 through September 30, 2000. Additionally, this notice contains one report of a regulatory waiver granted from March 1, 2000 through June 30, 2000 that was inadvertently omitted from the last notice. The report can be found in Section IV of this notice with respect to a waiver granted in connection with 24 CFR 950.980.

For ease of reference, the waivers granted by HUD are listed by HUD program office (for example, the Office of Community Planning and Development, the Office of Housing, the Office of Public and Indian Housing, etc.). Within each program office grouping, the waivers are listed sequentially by the section of title 24 being waived. For example, a waiver-grant action involving the waiver of a provision in 24 CFR part 58 would come before a waiver of a provision in 24 CFR part 570.

Where more than one regulatory provision is involved in the grant of a particular waiver request, the action is listed under the section number of the first regulatory requirement in title 24 that is being waived as part of the waiver-grant action. For example, a waiver of both § 58.73 and § 58.74 would appear sequentially in the listing under § 58.73.

Waiver-grant actions involving the same initial regulatory citation are in time sequence beginning with the earliest-dated waiver grant action.

Should HUD receive additional reports of waiver actions taken during the period covered by this report before the next report is published, the next updated report will include these earlier actions, as well as those that occurred between October 1, 2000 through December 31, 2000.

Accordingly, information about approved waiver requests pertaining to HUD regulations is provided in the Appendix that follows this notice.

Dated: January 10, 2001.

Andrew Cuomo,

Secretary.

Appendix—Listing of Waivers of Regulatory Requirements Granted by Offices of the Department of Housing and Urban Development July 1, 2000 Through September 30, 2000

Note to Reader: More information about the granting of these waivers, including a copy of the waiver request and approval, may be obtained by contacting the person whose name is listed as the contact person directly before each set of waivers granted.

The regulatory waivers granted appear in the following order:

I. Regulatory Waivers granted by the Office of Community Planning and Development.

II. Regulatory Waivers granted by the Office of Community Planning and Development and the Office of Public and Indian Housing.

III. Regulatory Waivers granted by the Office of Housing.

IV. Regulatory Waivers granted by the Office of Multifamily Housing Assistance Restructuring.

V. Regulatory Waivers granted by the Office of Public and Indian Housing.

I. Regulatory Waivers Granted by the Office of Community Planning and Development:

For further information about the following waiver actions, please see the name of the person which immediately follows the description of the waiver granted.

• *Regulation:* 24 CFR 58.34(b) and 24 CFR 58.38.

Project/Activity: Housing rehabilitation and housing acquisition projects, Ohkay Owingeh Housing Authority and the San Juan Pueblo Tribe, San Juan Pueblo, New Mexico.

Nature of Requirement: HUD's regulation at 24 CFR 58.34(b) states that a recipient does not have to submit a Request for Release of Funds and certification, and that no further approval from HUD will be needed to carry out exempt activities and projects, provided the responsible entity documents its determination that each activity or project is exempt.

Additionally, 24 CFR 58.38 requires the responsible entity to maintain a written record of the environmental review for each project. This document will be designated the Environmental Review Record, which shall contain all environmental review documents, public notices and written determinations or environmental findings required by part 58, decision making and actions pertaining to a particular project.

Granted By: Cardell Cooper, Assistant Secretary for Community Planning and Development.

Date Granted: July 28, 2000.

Reason Waived: HUD determined that there was good cause for the waiver. The Ohkay Owingeh Housing Authority made several errors during the environmental review and clearance process required by 24 CFR part 58 that resulted in the Housing Authority obligating and expending grant funds for the project before a determination by the San Juan Pueblo that the activities were exempt. HUD made a determination that there was no statutory or regulatory provision that would have prevented conversion of these activities to exempt. Therefore, this waiver was needed in order to permit the San Juan Pueblo to complete the environmental review process by documenting that the activities are exempt under 24 CFR part 58, after the obligation of HUD funds. HUD also determined that no environmental degradation resulted from the regulatory noncompliance and that no mitigation activities would be necessary since no environmental damage or potential problems were identified. Considering the above, HUD determined that a waiver of the regulatory requirements would maintain the integrity of HUD's environmental review process and was consistent with Executive Order 12084 that encourages flexibility in the consideration of waiver requests from tribal governments.

Contact: Bruce Knott, Director, Office of Grants Evaluation, National Office of Native American Programs (ONAP), Department of Housing and Urban Development, 1999 Broadway—Suite 3390, Denver, Colorado 80202, Telephone: (303) 675–1600.

• *Regulation:* 24 CFR 91.520.

Project/Activity: The County of Essex, New Jersey requested a waiver of the submission deadline for the County's 1999 CAPER.

Nature of Requirement: HUD's regulation at 24 CFR 91.520 requires each grantee to submit a performance report to HUD within 90 days after the close of the grantee's program year.

Granted By: Cardell Cooper, Assistant Secretary for Community Planning and Development.

Date Granted: August 25, 2000.

Reason Waived: HUD determined that there was good cause for the waiver. The County requested the waiver because of difficulties resulting from medical emergencies experienced by the Acting Director and staff responsible for Consolidated Annual Performance Evaluation Report (CAPER) preparation.

Contact: Cornelia Robertson-Terry, Office of Community Planning and Development, Department of Housing and Urban Development, 451 Seventh Street, SW., Room 7152, Washington, DC 20410; telephone (202) 708–2565.

• *Regulation:* 24 CFR 91.520.

Project/Activity: The City of Cumberland, Maryland requested a waiver of the submission deadline for the City's 1999 CAPER.

Nature of Requirement: HUD's regulation at 24 CFR 91.520 requires each grantee to submit a performance report to HUD within 90 days after the close of the grantee's program year.

Granted By: Cardell Cooper, Assistant Secretary for Community Planning and Development.

Date Granted: August 25, 2000.

Reason Waived: HUD determined that there was good cause for the waiver. The City requested the waiver because the lead person responsible for completing the CAPER, as well as inputting data in IDIS, has been summoned for jury duty in Federal District Court for the next four months.

Contact: Cornelia Robertson-Terry, Office of Community Planning and Development, Department of Housing and Urban Development, 451 Seventh Street, SW., Room 7152, Washington, DC 20410; telephone (202) 708–2565.

• *Regulation:* 24 CFR 91.520.

Project/Activity: The State of Nebraska requested a waiver of the submission deadline for the State's 1999 CAPER.

Nature of Requirement: HUD's regulation at 24 CFR 91.520 requires each grantee to submit a performance report to HUD within 90 days after the close of the grantee's program year.

Granted By: Cardell Cooper, Assistant Secretary for Community Planning and Development.

Date Granted: August 31, 2000.

Reason Waived: HUD determined that there was good cause for the waiver. The State requested the waiver because of staff turnover and IDIS development delays that impacted the ability to comply with beneficiary reporting requirements.

Contact: Cornelia Robertson-Terry, Office of Community Planning and Development, Department of Housing and Urban Development, 451 Seventh Street, SW., Room 7152, Washington, DC 20410; telephone (202) 708–2565.

• *Regulation:* 24 CFR 91.520.

Project/Activity: The County of Los Angeles, California requested a waiver of the submission deadline for the County's 1999 CAPER.

Nature of Requirement: HUD's regulation at 24 CFR 91.520 requires each grantee to submit a performance report to HUD within 90 days after the close of the grantee's program year.

Granted By: Cardell Cooper, Assistant Secretary for Community Planning and Development.

Date Granted: September 13, 2000.

Reason Waived: HUD determined that there was good cause for the waiver. The County requested the waiver because of technical problems with the Community Development Commission's financial management system.

Contact: Cornelia Robertson-Terry, Office of Community Planning and Development, Department of Housing and Urban Development, 451 Seventh Street, SW., Room 7152, Washington, DC 20410; telephone (202) 708–2565.

• *Regulation:* 24 CFR 91.520.

Project/Activity: Baltimore County, Maryland requested a waiver of the submission deadline for the County's 1999 CAPER.

Nature of Requirement: HUD's regulation at 24 CFR 91.520 requires each grantee to submit a performance report to HUD within 90 days after the close of the grantee's program year.

Granted By: Cardell Cooper, Assistant Secretary for Community Planning and Development.

Date Granted: September 13, 2000.

Reason Waived: HUD determined that there was good cause for the waiver. The County requested the waiver because of staff turnover and the need for additional time to allow new staff to become familiar with the CAPER submission process.

Contact: Cornelia Robertson-Terry, Office of Community Planning and Development, Department of Housing and Urban Development, 451 Seventh Street, SW., Room 7152, Washington, DC 20410; telephone (202) 708–2565.

• *Regulation:* 24 CFR 91.520.

Project/Activity: The City of San Angelo, Texas requested a waiver of the submission deadline for the City's 1999 CAPER.

Nature of Requirement: HUD's regulation at 24 CFR 91.520 requires each grantee to submit a performance report to HUD within 90 days after the close of the grantee's program year.

Granted By: Cardell Cooper, Assistant Secretary for Community Planning and Development.

Date Granted: September 13, 2000.

Reason Waived: HUD determined that there was good cause for the waiver. The City requested the waiver because of staffing problems due to the resignation of one staff member and need for surgery by another staff member.

Contact: Cornelia Robertson-Terry, Office of Community Planning and Development, Department of Housing and Urban Development, 451 Seventh Street, SW., Room 7152, Washington, DC 20410; telephone (202) 708–2565.

• *Regulation:* 24 CFR 91.520.

Project/Activity: The City of Hamden, Connecticut requested a waiver of the submission deadline for the City's 1999 CAPER.

Nature of Requirement: HUD's regulation at 24 CFR 91.520 requires each grantee to submit a performance report to HUD within 90 days after the close of the grantee's program year.

Granted By: Cardell Cooper, Assistant Secretary for Community Planning and Development.

Date Granted: September 14, 2000.

Reason Waived: HUD determined that there was good cause for the waiver. The City requested the waiver because the City is rebuilding records to eliminate inconsistencies in its 1998 CAPER. This effort has not allowed the staff to focus on preparing the current 1999 CAPER.

Contact: Cornelia Robertson-Terry, Office of Community Planning and Development, Department of Housing and Urban Development, 451 Seventh Street, SW., Room 7152, Washington, DC 20410; telephone (202) 708–2565.

• *Regulation:* 24 CFR 91.520.

Project/Activity: The City of Nashua, New Hampshire requested a waiver of the submission deadline for the City's 1999 CAPER.

Nature of Requirement: HUD's regulation at 24 CFR 91.520 requires each grantee to submit a performance report to HUD within 90 days after the close of the grantee's program year.

Granted By: Cardell Cooper, Assistant Secretary for Community Planning and Development.

Date Granted: September 27, 2000.

Reason Waived: HUD determined that there was good cause for the waiver. The City requested the waiver because of staff turnover and the delay in receiving audited financial figures necessary for reconciliation.

Contact: Cornelia Robertson-Terry, Office of Community Planning and Development, Department of Housing and Urban Development, 451 Seventh Street, SW., Room 7152, Washington, DC 20410; telephone (202) 708–2565.

• *Regulation:* 24 CFR 91.520.

Project/Activity: The City of Portland, Oregon requested a waiver of the submission deadline for the City's 1999 CAPER.

Nature of Requirement: HUD's regulation at 24 CFR 91.520 requires each grantee to submit a performance report to HUD within 90 days after the close of the grantee's program year.

Granted By: Cardell Cooper, Assistant Secretary for Community Planning and Development.

Date Granted: September 27, 2000.

Reason Waived: HUD determined that there was good cause for the waiver. The City requested the waiver as a result of recent staff turnover in the Portland Development Commission's CDBG staff. This did not provide sufficient time for the staff to review the CAPER reporting information and reconcile it with the City's records before the submission deadline.

Contact: Cornelia Robertson-Terry, Office of Community Planning and Development, Department of Housing and Urban Development, 451 Seventh Street, SW., Room 7152, Washington, DC 20410; telephone (202) 708–2565.

• *Regulation:* 24 CFR 91.520.

Project/Activity: The City of Vancouver, Washington requested a waiver of the submission deadline for the City's 1999 CAPER.

Nature of Requirement: 24 CFR 91.520 requires each grantee to submit a performance report to HUD within 90 days after the close of the grantee's program year.

Granted By: Cardell Cooper, Assistant Secretary for Community Planning and Development.

Date Granted: September 27, 2000.

Reason Waived: HUD determined that there was good cause for the waiver. The City requested the waiver due to delays caused by changes in key personnel and the need to reprogram funds and correct data in IDIS to ensure accurate information.

Contact: Cornelia Robertson-Terry, Office of Community Planning and Development, Department of Housing and Urban Development, 451 Seventh Street, SW., Room 7152, Washington, DC 20410; telephone (202) 708–2565.

• *Regulation:* 24 CFR 91.520.

Project/Activity: The City of Norwalk, California requested a waiver of the submission deadline for the City's 1999 CAPER.

Nature of Requirement: HUD's regulation at 24 CFR 91.520 requires each grantee to submit a performance report to HUD within 90 days after the close of the grantee's program year.

Granted By: Cardell Cooper, Assistant Secretary for Community Planning and Development.

Date Granted: September 27, 2000.

Reason Waived: HUD determined that there was good cause for the waiver. The City requested additional time for preparing the CAPER due to resignation of staff and unfilled vacancies.

Contact: Cornelia Robertson-Terry, Office of Community Planning and Development, Department of Housing and Urban Development, 451 Seventh Street, SW., Room 7152, Washington, DC 20410; telephone (202) 708–2565.

• *Regulation:* 24 CFR 91.520.

Project/Activity: The City of Moreno Valley, California requested a waiver of the submission deadline for the City's 1999 CAPER.

Nature of Requirement: HUD's regulation at 24 CFR 91.520 requires each grantee to submit a performance report to HUD within 90 days after the close of the grantee's program year.

Granted By: Cardell Cooper, Assistant Secretary for Community Planning and Development.

Date Granted: September 27, 2000.

Reason Waived: HUD determined that there was good cause for the waiver. The City requested additional time because its newly installed financial management system caused delays in the availability of the City's final expenditure data for reconciliation with data in IDIS.

Contact: Cornelia Robertson-Terry, Office of Community Planning and Development, Department of Housing and Urban Development, 451 Seventh Street, SW., Room 7152, Washington, DC 20410; telephone (202) 708–2565.

• *Regulation:* 24 CFR 91.520.

Project/Activity: The City of Tulare, California requested a waiver of the submission deadline for the City's 1999 CAPER.

Nature of Requirement: HUD's regulation at 24 CFR 91.520 requires each grantee to submit a performance report to HUD within 90 days after the close of the grantee's program year.

Granted By: Cardell Cooper, Assistant Secretary for Community Planning and Development.

Date Granted: September 27, 2000.

Reason Waived: HUD determined that there was good cause for the waiver. The City requested additional time because of the office's recent move to a new facility that included relocating and upgrading the computer mainframe, the network, and personal computers. This move delayed computer operations needed to produce accurate IDIS data for the CAPER.

Contact: Cornelia Robertson-Terry, Office of Community Planning and Development, Department of Housing and Urban Development, 451 Seventh Street, SW., Room 7152, Washington, DC 20410; telephone (202) 708–2565.

• *Regulation:* 24 CFR 91.520.

Project/Activity: The City of Modesto, California requested a waiver of the submission deadline for the City's 1999 CAPER.

Nature of Requirement: HUD's regulation at 24 CFR 91.520 requires each grantee to submit a performance report to HUD within 90 days after the close of the grantee's program year.

Granted By: Cardell Cooper, Assistant Secretary for Community Planning and Development.

Date Granted: September 27, 2000.

Reason Waived: HUD determined that there was good cause for the waiver. The City requested additional time due to vacancies and changes in key staff positions that are responsible for preparing the CAPER.

Contact: Cornelia Robertson-Terry, Office of Community Planning and Development, Department of Housing and Urban Development, 451 Seventh Street, SW., Room 7152, Washington, DC 20410; telephone (202) 708–2565.

• *Regulation:* 24 CFR 91.520.

Project/Activity: The City of Napa, California requested a waiver of the submission deadline for the City's 1999 CAPER.

Nature of Requirement: HUD's regulation at 24 CFR 91.520 requires each grantee to submit a performance report to HUD within 90 days after the close of the grantee's program year.

Granted By: Cardell Cooper, Assistant Secretary for Community Planning and Development.

Date Granted: September 27, 2000.

Reason Waived: HUD determined that there was good cause for the waiver. The City requested additional time because staff resources were diverted to cope with the aftermath of a serious earthquake that damaged many city businesses and residences.

Contact: Cornelia Robertson-Terry, Office of Community Planning and Development, Department of Housing and Urban Development, 451 Seventh Street, SW., Room 7152, Washington, DC 20410; telephone (202) 708–2565.

• *Regulation:* 24 CFR 91.520.

Project/Activity: The City of Elizabeth, New Jersey requested a waiver of the submission deadline for the City's 1999 CAPER.

Nature of Requirement: HUD's regulation at 24 CFR 91.520 requires each grantee to submit a performance report to HUD within 90 days after the close of the grantee's program year.

Granted By: Cardell Cooper, Assistant Secretary for Community Planning and Development.

Date Granted: September 27, 2000.

Reason Waived: HUD determined that there was good cause for the waiver. The City requested additional time because of the delay in submitting its Consolidated Plan and to ensure that the required public comment period for the CAPER will be satisfied.

Contact: Cornelia Robertson-Terry, Office of Community Planning and Development, Department of Housing and Urban Development, 451 Seventh Street, SW., Room 7152, Washington, DC 20410; telephone (202) 708–2565.

• *Regulation:* 24 CFR 91.520.

Project/Activity: The City of Camden, New Jersey requested a waiver of the submission deadline for the City's 1999 CAPER.

Nature of Requirement: HUD's regulation at 24 CFR 91.520 requires each grantee to submit a performance report to HUD within 90 days after the close of the grantee's program year.

Granted By: Cardell Cooper, Assistant Secretary for Community Planning and Development.

Date Granted: September 27, 2000.

Reason Waived: HUD determined that there was good cause for the waiver. The City requested additional time due to staff shortages.

Contact: Cornelia Robertson-Terry, Office of Community Planning and Development, Department of Housing and Urban Development, 451 Seventh Street, SW., Room 7152, Washington, DC 20410; telephone (202) 708–2565.

• *Regulation:* 24 CFR 91.520.

Project/Activity: The City of East Orange, New Jersey requested a waiver of the submission deadline for the City's 1999 CAPER.

Nature of Requirement: HUD's regulation at 24 CFR 91.520 requires each grantee to submit a performance report to HUD within 90 days after the close of the grantee's program year.

Granted By: Cardell Cooper, Assistant Secretary for Community Planning and Development.

Date Granted: September 27, 2000.

Reason Waived: HUD determined that there was good cause for the waiver. The City requested additional time because of staff difficulties resulting from the downsizing of the Planning Department, which is responsible for the preparation of the CAPER.

Contact: Cornelia Robertson-Terry, Office of Community Planning and Development, Department of Housing and Urban Development, 451 Seventh Street, SW., Room 7152, Washington, DC 20410; telephone (202) 708–2565.

• *Regulation:* 24 CFR 91.520.

Project/Activity: The City of Stamford, Connecticut requested a waiver of the submission deadline for the City's 1999 CAPER.

Nature of Requirement: HUD's regulation at 24 CFR 91.520 requires each grantee to submit a performance report to HUD within 90 days after the close of the grantee's program year.

Granted By: Cardell Cooper, Assistant Secretary for Community Planning and Development.

Date Granted: September 27, 2000.

Reason Waived: HUD determined that there was good cause for the waiver. The City requested additional time because of a staff turnover, which resulted in a delay in generating IDIS reports.

Contact: Cornelia Robertson-Terry, Office of Community Planning and Development, Department of Housing and Urban Development, 451 Seventh Street, SW., Room 7152, Washington, DC 20410; telephone (202) 708–2565.

sbull Regulation: 24 CFR 91.520.

Project/Activity: The City of New Britain, Connecticut requested a waiver of the submission deadline for the City's 1999 CAPER.

Nature of Requirement: HUD's regulation at 24 CFR 91.520 requires each grantee to submit a performance report to HUD within 90 days after the close of the grantee's program year.

Granted By: Cardell Cooper, Assistant Secretary for Community Planning and Development.

Date Granted: September 27, 2000.

Reason Waived: HUD determined that there was good cause for the waiver. The City requested additional time because of renovation of the City's Office of Municipal Development and the reorganization of its staff. Office files have been moved and displaced making it difficult for the staff to have efficient access to information on grantee activities.

Contact: Cornelia Robertson-Terry, Office of Community Planning and Development, Department of Housing and Urban Development, 451 Seventh Street, SW., Room 7152, Washington, DC 20410; telephone (202) 708–2565.

• *Regulation:* 24 CFR 91.520.

Project/Activity: The City of New London, Connecticut requested a waiver of the submission deadline for the City's 1999 CAPER.

Nature of Requirement: HUD's regulation at 24 CFR 91.520 requires each grantee to submit a performance report to HUD within 90 days after the close of the grantee's program year.

Granted By: Cardell Cooper, Assistant Secretary for Community Planning and Development.

Date Granted: September 27, 2000.

Reason Waived: HUD determined that there was good cause for the waiver. The City requested additional time because of the loss of two key finance staff. The two individuals provided the critical information required to

complete the reconciliation of programmatic and financial records.

Contact: Cornelia Robertson-Terry, Office of Community Planning and Development, Department of Housing and Urban Development, 451 Seventh Street, SW., Room 7152, Washington, DC 20410; telephone (202) 708–2565.

• *Regulation:* 24 CFR 91.520.

Project/Activity: The City of Weirton, West Virginia requested a waiver of the submission deadline for the City's 1999 CAPER.

Nature of Requirement: HUD's regulation at 24 CFR 91.520 requires each grantee to submit a performance report to HUD within 90 days after the close of the grantee's program year.

Granted By: Cardell Cooper, Assistant Secretary for Community Planning and Development.

Date Granted: September 27, 2000.

Reason Waived: HUD determined that there was good cause for the waiver. The City requested additional time due to staff turnover.

Contact: Cornelia Robertson-Terry, Office of Community Planning and Development, Department of Housing and Urban Development, 451 Seventh Street, SW., Room 7152, Washington, DC 20410; telephone (202) 708–2565.

• *Regulation:* 24 CFR 91.520.

Project/Activity: The City of Petersburg, Virginia requested a waiver of the submission deadline for the City's 1999 CAPER.

Nature of Requirement: HUD's regulation at 24 CFR 91.520 requires each grantee to submit a performance report to HUD within 90 days after the close of the grantee's program year.

Granted By: Cardell Cooper, Assistant Secretary for Community Planning and Development.

Date Granted: September 27, 2000.

Reason Waived: HUD determined that there was good cause for the waiver. The City requested additional time because of staff turnover.

Contact: Cornelia Robertson-Terry, Office of Community Planning and Development, Department of Housing and Urban Development, 451 Seventh Street, SW., Room 7152, Washington, DC 20410; telephone (202) 708–2565.

• *Regulation:* 24 CFR 91.520.

Project/Activity: The City of Virginia Beach, Virginia requested a waiver of the submission deadline for the City's 1999 CAPER.

Nature of Requirement: HUD's regulation at 24 CFR 91.520 requires each grantee to submit a performance report to HUD within 90 days after the close of the grantee's program year.

Granted By: Cardell Cooper, Assistant Secretary for Community Planning and Development.

Date Granted: September 27, 2000.

Reason Waived: HUD determined that there was good cause for the waiver. The City requested additional time for key staff to review the report and allow for public comment.

Contact: Cornelia Robertson-Terry, Office of Community Planning and Development, Department of Housing and Urban Development, 451 Seventh Street, SW., Room 7152, Washington, DC 20410; telephone (202) 708–2565.

• *Regulation:* 24 CFR 91.520.

Project/Activity: The City of Charlottesville, Virginia requested a waiver of the submission deadline for the City's 1999 CAPER.

Nature of Requirement: HUD's regulation at 24 CFR 91.520 requires each grantee to submit a performance report to HUD within 90 days after the close of the grantee's program year.

Granted By: Cardell Cooper, Assistant Secretary for Community Planning and Development.

Date Granted: September 27, 2000.

Reason Waived: HUD determined that there was good cause for the waiver. The City requested additional time due to staff turnover.

Contact: Cornelia Robertson-Terry, Office of Community Planning and Development, Department of Housing and Urban Development, 451 Seventh Street, SW., Room 7152, Washington, DC 20410; telephone (202) 708–2565.

• *Regulation:* 24 CFR 91.520.

Project/Activity: The City of Bristol, Virginia requested a waiver of the submission deadline for the City's 1999 CAPER.

Nature of Requirement: HUD's regulation at 24 CFR 91.520 requires each grantee to submit a performance report to HUD within 90 days after the close of the grantee's program year.

Granted By: Cardell Cooper, Assistant Secretary for Community Planning and Development.

Date Granted: September 27, 2000.

Reason Waived: HUD determined that there was good cause for the waiver. The City requested additional time because of internal delays in obtaining accounting information.

Contact: Cornelia Robertson-Terry, Office of Community Planning and Development, Department of Housing and Urban Development, 451 Seventh Street, SW., Room 7152, Washington, DC 20410; telephone (202) 708–2565.

• *Regulation:* 24 CFR 91.520.

Project/Activity: The City of Portsmouth, Virginia requested a waiver of the submission deadline for the City's 1999 CAPER.

Nature of Requirement: HUD's regulation at 24 CFR 91.520 requires each grantee to submit a performance report to HUD within 90 days after the close of the grantee's program year.

Granted By: Cardell Cooper, Assistant Secretary for Community Planning and Development.

Date Granted: September 27, 2000.

Reason Waived: HUD determined that there was good cause for the waiver. The City requested additional time due to recent staff turnover.

Contact: Cornelia Robertson-Terry, Office of Community Planning and Development, Department of Housing and Urban Development, 451 Seventh Street, SW., Room 7152, Washington, DC 20410; telephone (202) 708–2565.

• *Regulation:* 24 CFR 91.520.

Project/Activity: Chesterfield County, Virginia requested a waiver of the submission deadline for the City's 1999 CAPER.

Nature of Requirement: HUD's regulation at 24 CFR 91.520 requires each grantee to submit a performance report to HUD within 90 days after the close of the grantee's program year.

Granted By: Cardell Cooper, Assistant Secretary for Community Planning and Development.

Date Granted: September 27, 2000.

Reason Waived: HUD determined that there was good cause for the waiver. The County requested additional time due to recent staff turnover.

Contact: Cornelia Robertson-Terry, Office of Community Planning and Development, Department of Housing and Urban Development, 451 Seventh Street, SW., Room 7152, Washington, DC 20410; telephone (202) 708–2565.

• *Regulation:* 24 CFR 91.520.

Project/Activity: The City of Philadelphia, Pennsylvania requested a waiver of the submission deadline for the City's 1999 CAPER.

Nature of Requirement: HUD's regulation at 24 CFR 91.520 requires each grantee to submit a performance report to HUD within 90 days after the close of the grantee's program year.

Granted By: Cardell Cooper, Assistant Secretary for Community Planning and Development.

Date Granted: September 27, 2000.

Reason Waived: HUD determined that there was good cause for the waiver. The City requested additional time because the City's fiscal year closing adjustments will not be released in sufficient time to allow the office responsible for report preparation to obtain information needed to complete the CAPER before the deadline.

Contact: Cornelia Robertson-Terry, Office of Community Planning and Development, Department of Housing and Urban Development, 451 Seventh Street, SW., Room 7152, Washington, DC 20410; telephone (202) 708–2565.

• *Regulation:* 24 CFR 91.520.

Project/Activity: The City of Scranton, Pennsylvania requested a waiver of the submission deadline for the City's 1999 CAPER.

Nature of Requirement: HUD's regulation at 24 CFR 91.520 requires each grantee to submit a performance report to HUD within 90 days after the close of the grantee's program year.

Granted By: Cardell Cooper, Assistant Secretary for Community Planning and Development.

Date Granted: September 27, 2000.

Reason Waived: HUD determined that there was good cause for the waiver. The City requested additional time due to computer system failure.

Contact: Cornelia Robertson-Terry, Office of Community Planning and Development, Department of Housing and Urban Development, 451 Seventh Street, SW., Room 7152, Washington, DC 20410; telephone (202) 708–2565.

• *Regulation:* 24 CFR 91.520.

Project/Activity: The City of Dover, Delaware requested a waiver of the submission deadline for the City's 1999 CAPER.

Nature of Requirement: HUD's regulation at 24 CFR 91.520 requires each grantee to submit a performance report to HUD within 90 days after the close of the grantee's program year.

Granted By: Cardell Cooper, Assistant Secretary for Community Planning and Development.

Date Granted: September 27, 2000.

Reason Waived: HUD determined that there was good cause for the waiver. The City requested additional time because the staff person directly responsible for preparing the CAPER has been on sick leave.

Contact: Cornelia Robertson-Terry, Office of Community Planning and Development, Department of Housing and Urban Development, 451 Seventh Street, SW., Room 7152, Washington, DC 20410; telephone (202) 708–2565.

• *Regulation:* 24 CFR 91.520.

Project/Activity: The City of Baltimore, Maryland requested a waiver of the submission deadline for the City's 1999 CAPER.

Nature of Requirement: HUD's regulation at 24 CFR 91.520 requires each grantee to submit a performance report to HUD within 90 days after the close of the grantee's program year.

Granted By: Cardell Cooper, Assistant Secretary for Community Planning and Development.

Date Granted: September 27, 2000.

Reasons Waived: HUD determined that there was good cause for the waiver. The City requested additional time because the accounting records are not released in sufficient time to allow the City to complete the CAPER.

Contact: Cornelia Robertson-Terry, Office of Community Planning and Development, Department of Housing and Urban Development, 451 Seventh Street, SW., Room 7152, Washington, DC 20410; telephone (202) 708–2565.

• *Regulation:* 24 CFR 92.205.

Project/Activity: The Kentucky Housing Corporation requested a waiver of the provision to permit less than a $1,000 minimum HOME investment per unit.

Nature of Requirement: HUD's regulation at 24 CFR 92.205 requires that the minimum of HOME funds that may be invested in a project is an average of $1,000 per unit.

Granted By: Cardell Cooper, Assistant Secretary for Community Planning and Development.

Date Granted: August 7, 2000.

Reason Waived: HUD determined that there was good cause for the waiver. KHC provided justification that less than $1,000 was needed to assist homebuyers. Without a waiver these recipients would be either disqualified from becoming homebuyers or they would be over-subsidized in order to receive the HOME assistance.

Contact: Cornelia Robertson-Terry, Office of Community Planning and Development, Department of Housing and Urban Development, 451 Seventh Street, SW., Room 7152, Washington, DC 20410; telephone (202) 708–2565.

• *Regulations:* 24 CFR 92.205, 92.503(b)(2).

Project/Activity: The Kentucky Housing Corporation requested a waiver of provisions regarding termination of a project prior to completion and the subsequent repayment requirement.

Nature of Requirement: HUD's regulations at 24 CFR 92.205 and 92.503(b)(2) require that a HOME unit that is terminated before completion, either voluntarily or otherwise, constitutes an ineligible activity and any HOME funds invested must be repaid.

Granted By: Cardell Cooper, Assistant Secretary for Community Planning and Development.

Date Granted: July 20, 2000.

Reason Waived: HUD determined that there was good cause for the waiver. The homeowner died prior to completion of construction and no further work on the home was done.

Contact: Cornelia Robertson-Terry, Office of Community Planning and Development, Department of Housing and Urban Development, 451 Seventh Street, SW., Room 7152, Washington, DC 20410; telephone (202) 708–2565.

• *Regulation:* 24 CFR 92.214(a)(8).

Project/Activity: The City of Taylorsville, Utah requested permission to use HOME funds for acquisition of a parcel of land located within its boundaries, but owned by Salt Lake County. The City plans to move an existing home on the subject site which will be sold to a low income family.

Nature of Requirement: HUD's regulation at 24 CFR 92.214(a)(8) prohibits grantees from using HOME funds to pay for the acquisition of property owned by the participating jurisdiction, except for property acquired by the PJ with HOME funds, or property acquired in anticipation of carrying out a HOME project.

Granted By: Cardell Cooper, Assistant Secretary for Community Planning and Development.

Date Granted: August 31, 2000.

Reason Waived: HUD determined that there was good cause for the waiver since the transaction would assist the City in its effort to provide an affordable unit for a low income family.

Contact: Cornelia Robertson-Terry, Office of Community Planning and Development, Department of Housing and Urban Development, 451 Seventh Street, SW., Room 7152, Washington, DC 20410; telephone (202) 708–2565.

• *Regulation:* 24 CFR 92.251.

Project/Activity: North Dakota counties and Indian reservation communities requested a waiver of the HOME provision which requires HOME-assisted housing to meet the applicable codes, standards, and ordinances specified.

Nature of Requirement: HUD's regulation at 24 CFR 92.251 requires that housing that is constructed or rehabilitated with HOME funds must meet all applicable local codes, rehabilitation standards, ordinances, and zoning ordinances at the time of project completion.

Granted By: Cardell Cooper, Assistant Secretary for Community Planning and Development.

Date Granted: August 31, 2000.

Reason Waived: HUD determined that there was good cause for the waiver. The State of North Dakota requested this waiver in order to allow for the use of HOME funds for emergency repairs on damaged housing within the disaster area. Funding sources are inadequate to address the housing needs that exist within the disaster area. The State would like to use HOME funds to assist in addressing this need. HUD therefore determined that this provision creates undue hardship for the communities and families in need of disaster-related assistance.

Contact: Cornelia Robertson-Terry, Office of Community Planning and Development, Department of Housing and Urban Development, 451 Seventh

Street, SW., Room 7152, Washington, DC 20410; telephone (202) 708–2565.

• *Regulation:* 24 CFR 570.200(h)(1).

Project/Activity: The City of Coral Springs, Florida requested a waiver to allow the City to use CDBG funds to reimburse administrative costs incurred for the planning and preparation of its first Consolidated Plan as a new Entitlement community.

Nature of Requirement: HUD's regulation at 24 CFR 570.200(h)(1) states that a grantee may only use CDBG funds to pay pre-award costs if, among other things, the activity for which the costs are being incurred is included in a Consolidated Plan or an amended Consolidated Plan prior to the costs being incurred.

Granted By: Cardell Cooper, Assistant Secretary for Community Planning and Development.

Date Granted: July 28, 2000.

Reason Waived: HUD determined that there was good cause for the waiver. The City is a new Entitlement community. Failure to grant the waiver would result in undue hardship and affect the benefits to the low- and moderate-income population of the City. Further, the authorization for new grantees to pay for planning and administrative start-up costs with CDBG funds was inadvertently omitted during the November 1995 revision to the CDBG regulations.

Contact: Cornelia Robertson-Terry, Office of Community Planning and Development, Department of Housing and Urban Development, 451 Seventh Street, SW., Room 7152, Washington, DC 20410; telephone (202) 708–2565.

• *Regulation:* 24 CFR 570.200(h)(1).

Project/Activity: The City of Deerfield Beach, Florida requested a waiver to allow the City to use CDBG funds to reimburse administrative costs incurred for the planning and preparation of its first Consolidated Plan as a new Entitlement community.

Nature of Requirement: HUD's regulation at 24 CFR 570.200(h)(1) states that a grantee may only use CDBG funds to pay pre-award costs if, among other things, the activity for which the costs are being incurred is included in a Consolidated Plan or an amended Consolidated Plan prior to the costs being incurred.

Granted By: Cardell Cooper, Assistant Secretary for Community Planning and Development.

Date Granted: September 27, 2000.

Reason Waived: HUD determined that there was good cause for the waiver. The City is a new Entitlement community. Failure to grant the waiver would result in undue hardship and affect the benefits to the low- and moderate-income population of the City. Further, the authorization for new grantees to pay for planning and administrative start-up costs with CDBG funds was inadvertently omitted during the November 1995 revision to the CDBG regulations.

Contact: Cornelia Robertson-Terry, Office of Community Planning and Development, Department of Housing and Urban Development, 451 Seventh Street, SW., Room 7152, Washington, DC 20410; telephone (202) 708–2565.

• *Regulation:* 24 CFR 576.21(b)(2).

Project/Activity: Hennepin County, Minnesota requested a waiver of the 30 percent limitation on essential services in its ESG program.

Nature of Requirement: HUD's regulation at 24 CFR 576.21(b)(2) implements the statutory requirement that no more than thirty percent of the Emergency Shelter Grant funds be expended for essential services. This regulatory section also notes that the statute (42 U.S.C. 11374) also permits waiver of this requirement if the grantee demonstrates that other eligible activities are already being carried out in the locality with other resources.

Granted By: Cardell Cooper, Assistant Secretary for Community Planning and Development.

Date Granted: July 10, 2000.

Reason Waived: HUD determined that there was good cause for the waiver. Hennepin County provided documentation to support its claim that alternative funding for rehabilitation, operating costs and other eligible activities is available. The waiver allows Hennepin County to spend up to 100 percent of its FY 1999 and FY 2000 grants on essential services.

Contact: Cornelia Robertson-Terry, Office of Community Planning and Development, Department of Housing and Urban Development, 451 Seventh Street, SW., Room 7152, Washington, DC 20410; telephone (202) 708–2565.

• *Regulation:* 24 CFR 576.21(b)(2).

Project/Activity: The Municipality of Caguas, Puerto Rico requested a waiver of the 30 percent limitation on essential services in its ESG program.

Nature of Requirement: HUD's regulation at 24 CFR 576.21(b)(2) implements the statutory requirement that no more than thirty percent of the Emergency Shelter Grant funds be expended for essential services. This regulatory section also notes that the statute (42 U.S.C. 11374) also permits waiver of this requirement if the grantee demonstrates that other eligible activities are already being carried out in the locality with other resources.

Granted By: Cardell Cooper, Assistant Secretary for Community Planning and Development.

Date Granted: August 25, 2000.

Reason Waived: HUD determined that there was good cause for the waiver. Caguas provided documentation to HUD to support the Municipality's claim that it is meeting its demand for other activities through funding from the United Way, the Department of Health, and local funds.

Contact: Cornelia Robertson-Terry, Office of Community Planning and Development, Department of Housing and Urban Development, 451 Seventh Street, SW., Room 7152, Washington, DC 20410; telephone (202) 708–2565.

• *Regulation:* 24 CFR 576.21(b)(2).

Project/Activity: Onondago County, New York requested a waiver of the 30 percent limitation on essential services in its ESG program.

Nature of Requirement: HUD's regulation at 24 CFR 576.21(b)(2) requires that no more than 30 percent of ESG grant funds be expended for essential services.

Granted By: Cardell Cooper, Assistant Secretary for Community Planning and Development.

Date Granted: August 31, 2000.

Reason Waived: HUD determined that there was good cause for the waiver. Onondaga County provided documentation to HUD to support its claim of that other present needs for the County's ESG funds exist. The County may spend up to 58.67 percent of its funds for essential services.

Contact: Cornelia Robertson-Terry, Office of Community Planning and Development, Department of Housing and Urban Development, 451 Seventh Street, SW., Room 7152, Washington, DC 20410; telephone (202) 708–2565.

• *Regulation:* 24 CFR 576.35(b).

Project/Activity: The City of Minneapolis, Minnesota requested a waiver regarding the time frame for expenditure of its FY 1998 Emergency Shelter Grant (ESG) funds.

Nature of Requirement: HUD's regulation at 24 CFR 576.35(b) requires recipients to expend ESG funds within two years of HUD's award.

Granted By: Cardell Cooper, Assistant Secretary for Community Planning and Development.

Date Granted: July 28, 2000.

Reason Waived: HUD determined that there was good cause for the waiver. The City experienced unexpected delays in several rehabilitation projects. Failure to grant the waiver would adversely affect the City's ability to serve the homeless. HUD extended the date for the City to expend its 1998 funds to on or about July 15, 2000.

Contact: Cornelia Robertson-Terry, Office of Community Planning and Development, Department of Housing and Urban Development, 451 Seventh Street, SW., Room 7152, Washington, DC 20410; telephone (202) 708–2565.

• *Regulation:* 24 CFR 882.408(b).

Project/Activity: The Metro Dade, Florida Housing Agency requested a waiver of the limitation on the initial Gross Rent for a Single Room Occupancy (SRO) property. The proposed rent would exceed the current Moderate Rehabilitation SRO Fair Market Rent (FMR) by more than 10%.

Nature of Requirement: HUD's regulation at 24 CFR 882.408(b) allows a housing agency to approve initial gross rents which exceed the applicable FMR by up to 10 percent for all units of a given size in specified areas.

Granted By: Cardell Cooper, Assistant Secretary for Community Planning and Development.

Date Granted: September 5, 2000.

Reason Waived: HUD determined that there was good cause for the waiver. Higher rents were necessitated by development obstacles such as change in sites, change in owner/developer and delay in obtaining financial resources.

Contact: Cornelia Robertson-Terry, Office of Community Planning and Development, Department of Housing and Urban Development, 451 Seventh Street, SW., Room 7152, Washington, DC 20410; telephone (202) 708–2565.

• *Regulation:* 24 CFR 882.805(d)(1)(ii)(B).

Project/Activity: The San Francisco, California Housing Authority requested a waiver of the Single Room Occupancy (SRO) requirement on the maximum amount allowed per unit for rehabilitation.

Nature of Requirement: HUD's regulation at 24 CFR 882.805(d)(1)(ii)(B) allows an SRO recipient to multiply the maximum per unit rehabilitation amount by 2.4 in areas where the Housing Authority has demonstrated to HUD's satisfaction that the increase is reasonable to accommodate special local conditions, including high construction costs. In the case of San Francisco, this would allow a maximum rehabilitation costs of $42,840.

Granted By: Cardell Cooper, Assistant Secretary for Community Planning and Development.

Date Granted: August 30, 2000.

Reason Waived: HUD determined that there was good cause for the waiver. The City documented the high cost of the project and the difficulty in finding and acquiring suitable properties for the SRO program. The City further stated that the property is almost 90 years old and needs extensive rehabilitation to meet current building and accessibility code standards. The final per unit rehabilitation cost for this project is projected to be $69,311, well above the maximum approvable cost.

Contact: Cornelia Robertson-Terry, Office of Community Planning and Development, Department of Housing and Urban Development, 451 Seventh Street, SW., Room 7152, Washington, DC 20410; telephone (202) 708–2565.

II. Regulatory Waivers Granted by the Office of Community Planning and Development and the Office of Public and Indian Housing

For further information about the following waiver actions, please see the name of the person which immediately follows the description of the waiver granted.

• *Regulation:* 24 CFR 50.3(h)(3) and 1000.20(a).

Project/Activity: Acquisition of 10 Operation Walking Shield housing units, Flandreau Santee Sioux Tribe and Flandreau Santee Sioux Housing Authority, Flandreau, South Dakota.

Nature of Requirement: HUD's regulation at § 50.3(h) requires that for HUD grant programs in which funding approval for an applicant's program must occur before the applicant's selection of properties an applicant must agree to not acquire, rehabilitate, convert, lease, repair or construct property, nor commit or expend HUD or local funds until HUD approval of the property is obtained. HUD's regulation at § 1000.20(a) requires an environmental review be completed for any Native American Housing Assistance and Self-Determination Act project not excluded from review before a recipient may acquire, rehabilitate, convert, lease, repair or construct property, or commit HUD or local funds.

Granted By: Cardell Cooper, Assistant Secretary for Community Planning and Development and Harold Lucas, Assistant Secretary for Public and Indian Housing.

Date Granted: July 31, 2000.

Reason Waived: HUD determined that there was good cause for the waiver. The Flandreau Santee Sioux Housing Authority used NAHASDA funds to acquire, rehabilitate and lease the subject Walking Shield units before receiving HUD approval of the property as required by 24 CFR 50.3(h)(3) and before HUD completed an environmental review. HUD has since completed the environmental review for the project. In order to satisfactorily resolve the issue, waivers of the provisions of 24 CFR 50.3(h)(3) and 1000.20(a) are necessary. HUD also determined that no environmental degradation resulted from the regulatory noncompliance and that no mitigation activities would be necessary since no environmental damage or potential problems were identified. Considering the above, HUD determined that a waiver of the regulatory requirements would maintain the integrity of HUD's environmental review process and was consistent with Executive Order 12084 that encourages flexibility in the consideration of waiver requests from tribal governments.

Contact: Bruce Knott, Director, Office of Grants Evaluation, National Office of Native American Programs (ONAP), Department of Housing and Urban Development, 1999 Broadway—Suite 3390, Denver, Colorado 80202, Telephone: (303) 675–1600.

sbull Regulation: 24 CFR 50.17 and 1000.20(a).

Project/Activity: Construction of 15 housing units with residual 1937 Housing Act funds under the Native American Housing Assistance and Self-Determination Act (NAHASDA), Upper Sioux Tribe, Granite Falls, Minnesota.

Nature of Requirement: HUD's regulation at § 50.17 requires that an environmental assessment and finding of no significant impact or an environmental impact statement be completed before the applicable decision points for projects not exempt or categorically excluded from environmental review requirements. HUD's regulation at § 1000.20(a) requires that an environmental review be completed for any NAHASDA project not excluded from review before a recipient may acquire, rehabilitate, convert, lease, repair or construct property, or commit HUD or local funds.

Granted By: Cardell Cooper, Assistant Secretary for Community Planning and Development and Harold Lucas, Assistant Secretary for Public and Indian Housing.

Date Granted: Granted by Mr. Cooper on July 27, 2000 and by Mr. Lucas on July 28, 2000.

Reason Waived: HUD determined that there was good cause for the waiver. The Upper Sioux Tribe made several errors during the environmental review and clearance process required by 24 CFR part 58 that resulted in the tribe obligating and expending grant funds for the project before HUD's approval of the Request for Release of Funds and Certification, form HUD 7015.15. HUD made a determination based upon these actions to conduct an environmental review according to 24 CFR part 50. A HUD environmental review at this point would be after the execution of the Indian Housing Block Grant Agreement for this project. Therefore, a waiver is

necessary to allow HUD to conduct the review and resolve the issue. HUD also determined that no environmental degradation resulted from the regulatory noncompliance and that no mitigation activities would be necessary since no environmental damage or potential problems were identified. Considering the above, HUD determined that a waiver of the regulatory requirements would maintain the integrity of HUD's environmental review process and was consistent with Executive Order 12084 that encourages flexibility in the consideration of waiver requests from tribal governments.

Contact: Bruce Knott, Director, Office of Grants Evaluation, National Office of Native American Programs (ONAP), Department of Housing and Urban Development, 1999 Broadway—Suite 3390, Denver, Colorado 80202, Telephone: (303) 675–1600.

III. Regulatory Waivers Granted by the Office of Housing

For further information about the following waiver actions, please see the name of the person which immediately follows the description of the waiver granted.

• *Regulation:* 24 CFR 202.3(c)(2)(iii).

Project/Activity: Credit Watch/ Termination Threshold.

Nature Of Requirement: HUD's regulation at 24 CFR 202.3(c)(2)(iii) establishes a default and claim rate threshold for HUD/FHA approved mortgagees on credit watch status.

Granted By: William C. Apgar, Assistant Secretary for Housing-Federal Housing Commissioner

Date Granted: August 21, 2000.

Reason Waived: HUD determined that there was good cause for the waiver. Waiving the regulation permits HUD/ FHA to initially focus on those lenders originating the worst performing loans. The waiver will adjust the Credit Watch threshold from being between 150% and 200.9% of the HUD field office default and claim rate to being between 200% and 300.9% of that rate. This waiver is limited to Credit Watch reviews conducted in the third quarter of FY 2000.

Contact: Joy Hadley, Director, Quality Assurance Division, Department of Housing and Urban Development, 451 Seventh Street SW., Room B133–P3214, Washington, DC 20410, telephone (202) 708–2830.

• *Regulation:* 24 CFR 891.100(d).

Project/Activity: Lakeview Senior Apartments, Carmel, New York, Project Number: 012–EE245/NY36–S981–001.

Nature Of Requirement: HUD's regulation at 24 CFR 891.100(d) prohibits amendment of the capital advance fund reservation prior to initial closing.

Granted By: William C. Apgar, Assistant Secretary for Housing-Federal Housing Commissioner.

Date Granted: July 25, 2000.

Reason Waived: HUD determined that there was good cause for the waiver. The sponsor had exhausted all efforts to secure secondary funding from outside sources, and the project was economically designed and comparable to similar projects developed in the area.

Contact: Willie Spearmon, Director, Office of Housing Assistance and Grant Administration, Department of Housing and Urban Development, 451 Seventh Street, SW., Washington, DC 20410, telephone: (202) 708–3000.

• *Regulation:* 24 CFR 891.100(d).

Project/Activity: Good Shepherd, Blair, Nebraska, Project Number: 103–E018/NE26–S981–001.

Nature Of Requirement: HUD's regulation at 24 CFR 891.100(d) prohibits amendment of the capital advance fund reservation prior to initial closing.

Granted By: William C. Apgar, Assistant Secretary for Housing-Federal Housing Commissioner.

Date Granted: August 4, 2000.

Reason Waived: HUD determined that there was good cause for the waiver. The owner had received a $65,000 grant from the Federal Housing Finance Board, the project was comparable in cost to similar projects, and the sponsor could not contribute any additional funds.

Contact: Willie Spearmon, Director, Office of Housing Assistance and Grant Administration, Department of Housing and Urban Development, 451 Seventh Street, SW., Washington, DC 20410, telephone: (202) 708–3000.

• *Regulation:* 24 CFR 891.100(d).

Project/Activity: Centerplace III, New Albany, Indiana, Project Number: 073–HD048/IN36–Q981–002.

Nature Of Requirement: HUD's regulation at 24 CFR 891.100(d) prohibits amendment of the capital advance fund reservation prior to initial closing.

Granted By: William C. Apgar, Assistant Secretary for Housing-Federal Housing Commissioner.

Date Granted: August 8, 2000.

Reason Waived: HUD determined that there was good cause for the waiver. The development costs were comparable to other similar projects recently developed in Indiana and the project was of modest design.

Contact: Willie Spearmon, Director, Office of Housing Assistance and Grant Administration, Department of Housing and Urban Development, 451 Seventh Street, SW., Washington, DC 20410, telephone: (202) 708–3000.

• *Regulation:* 24 CFR 891.100(d).

Project/Activity: Castleton Homes, Lanham, Maryland, Project Number: 000–HD041/MD39–Q981–003.

Nature Of Requirement: HUD's regulation at 24 CFR 891.100(d) prohibits amendment of the capital advance fund reservation prior to initial closing.

Granted By: William C. Apgar, Assistant Secretary for Housing-Federal Housing Commissioner.

Date Granted: August 11, 2000.

Reason Waived: HUD determined that there was good cause for the waiver. The project required replacement of the HVAC systems in all three houses which had significantly increased costs.

Contact: Willie Spearmon, Director, Office of Housing Assistance and Grant Administration, Department of Housing and Urban Development, 451 Seventh Street, SW., Washington, DC 20410, telephone: (202) 708–3000.

• *Regulation:* 24 CFR 891.100(d).

Project/Activity: Bishop Daly Gardens, Uniondale, New York, Project Number: 012–EE249/NY36–S981–005.

Nature Of Requirement: HUD's regulation at 24 CFR 891.100(d) prohibits amendment of the capital advance fund reservation prior to initial closing.

Granted By: William C. Apgar, Assistant Secretary for Housing-Federal Housing Commissioner.

Date Granted: August 16, 2000.

Reason Waived: HUD determined that there was good cause for the waiver. The project was economically designed and comparable in cost to similar projects, and the sponsor could not contribute any additional funds.

Contact: Willie Spearmon, Director, Office of Housing Assistance and Grant Administration, Department of Housing and Urban Development, 451 Seventh Street, SW., Washington, DC 20410, telephone:(202) 708–3000.

• *Regulation:* 24 CFR 891.100(d).

Project/Activity: Turlock Silvercrest, Turlock, California, Project Number: 121–EE112/CA39–S981–005.

Nature Of Requirement: HUD's regulation at 24 CFR 891.100(d) prohibits amendment of the capital advance fund reservation prior to initial closing.

Granted By: William C. Apgar, Assistant Secretary for Housing-Federal Housing Commissioner.

Date Granted: August 21, 2000.

Reason Waived: HUD determined that there was good cause for the waiver. The contractor could not build the project within the fund reservation amount.

Contact: Willie Spearmon, Director, Office of Housing Assistance and Grant Administration, Department of Housing and Urban Development, 451 Seventh Street, SW., Washington, DC 20410, telephone:(202) 708–3000.

• *Regulation:* 24 CFR 891.100(d).

Project/Activity: VOA Riverside 10, Fort Worth, Texas, Project Number: 113–HD015/TX1–Q971–001.

Nature Of Requirement: HUD's regulation at 24 CFR 891.100(d) prohibits amendment of the capital advance fund reservation prior to initial closing.

Granted By: William C. Apgar, Assistant Secretary for Housing-Federal Housing Commissioner.

Date Granted: August 21, 2000.

Reason Waived: HUD determined that there was good cause for the waiver. The project was modestly designed and comparable to similar projects in the area, and the sponsor had exhausted all means of obtaining additional funds for the is project.

Contact: Willie Spearmon, Director, Office of Housing Assistance and Grant Administration, Department of Housing and Urban Development, 451 Seventh Street, SW., Washington, DC 20410, telephone:(202) 708–3000.

• *Regulation:* 24 CFR 891.100(d).

Project/Activity: Saint Paul the Apostle Senior Housing, Corona, New York, Project Number: 012–EE254/NY36–S981–010.

Nature Of Requirement: HUD's regulation at 24 CFR 891.100(d) prohibits amendment of the capital advance fund reservation prior to initial closing.

Granted By: William C. Apgar, Assistant Secretary for Housing-Federal Housing Commissioner.

Date Granted: August 21, 2000.

Reason Waived: HUD determined that there was good cause for the waiver. The project was modest in design, comparable to similar projects in the area, and the sponsor had made every attempt to secure additional funding from outside sources.

Contact: Willie Spearmon, Director, Office of Housing Assistance and Grant Administration, Department of Housing and Urban Development, 451 Seventh Street, SW., Washington, DC 20410, telephone:(202) 708–3000.

• *Regulation:* 24 CFR 891.100(d).

Project/Activity: Cambridge Apartments, Rutledge, Tennessee, Project Number: 087–EE036/TN37–S981–004.

Nature Of Requirement: HUD's regulation at 24 CFR 891.100(d) prohibits amendment of the capital advance fund reservation prior to initial closing.

Granted By: William C. Apgar, Assistant Secretary for Housing-Federal Housing Commissioner.

Date Granted: August 22, 2000.

Reason Waived: HUD determined that there was good cause for the waiver. The owner had contributed the required minimum capital investment and purchased the site, the project was comparable in cost to similar projects, and the sponsor could not contribute any additional funds.

Contact: Willie Spearmon, Director, Office of Housing Assistance and Grant Administration, Department of Housing and Urban Development, 451 Seventh Street, SW., Washington, DC 20410, telephone:(202) 708–3000.

• *Regulation:* 24 CFR 891.100(d).

Project/Activity: St. Peter's Place II, Phoenixville, Pennsylvania, Project Number: 034–EE070/PA26–S971–002.

Nature Of Requirement: HUD's regulation at 24 CFR 891.100(d) prohibits amendment of the capital advance fund reservation prior to initial closing.

Granted By: William C. Apgar, Assistant Secretary for Housing-Federal Housing Commissioner.

Date Granted: August 25, 2000.

Reason Waived: HUD determined that there was good cause for the waiver. The project was modest in design, comparable to similar projects in the area and the owner had secured $230,000 from the Federal Home Loan Bank Board and $100,000 from the Chester County Office of Housing and Community Development.

Contact: Willie Spearmon, Director, Office of Housing Assistance and Grant Administration, Department of Housing and Urban Development, 451 Seventh Street, SW., Washington, DC 20410, telephone:(202) 708–3000.

• *Regulation:* 24 CFR 891.100(d).

Project/Activity: Homes With Hope, Westport, Connecticut, Project Number: 017–HD015/CT26–Q961–001.

Nature Of Requirement: HUD's regulation at 24 CFR 891.100(d) prohibits amendment of the capital advance fund reservation prior to initial closing.

Granted By: William C. Apgar, Assistant Secretary for Housing-Federal Housing Commissioner.

Date Granted: September 26, 2000.

Reason Waived: HUD determined that there was good cause for the waiver. The project was modest in design, comparable to similar projects in the area and the sponsor/owner had exhausted attempts in obtaining funds from other sources.

Contact: Willie Spearmon, Director, Office of Housing Assistance and Grant Administration, Department of Housing and Urban Development, 451 Seventh Street, SW., Washington, DC 20410, telephone:(202) 708–3000.

• *Regulations:* 24 CFR 891.100(d)and 891.165.

Project/Activity: Alice Williams Towers II, Atlanta, Georgia, Project Number: 061–EE065/GA06–S971–009.

Nature Of Requirement: HUD's regulation at 24 CFR 891.100(d) prohibits amendment of the capital advance fund reservation prior to initial closing. HUD's regulation at 24 CFR 891.165 provides that the duration of a capital advance fund reservation is 18 months from the date of issuance with limited exceptions up to 24 months as approved by HUD on a case-by-case basis.

Granted By: William C. Apgar, Assistant Secretary for Housing-Federal Housing Commissioner.

Date Granted: August 4, 2000.

Reason Waived: HUD determined that there was good cause for the waiver. The project was delayed to allow the sponsor and contractor time to prepare a new construction cost estimate and to obtain zoning approval. The project was also modest in design, comparable to similar projects developed in the area, the sponsor/owner had made every attempt to secure additional funding from outside sources, and the sponsor/owner had exhausted their resources.

Contact: Willie Spearmon, Director, Office of Housing Assistance and Grant Administration, Department of Housing and Urban Development, 451 Seventh Street, SW., Washington, DC 20410, telephone: (202) 708–3000.

• *Regulations:* 24 CFR 891.100(d) and 891.165.

Project/Activity: HIS/Elois McCoy Village Apartments, Chicago, Illinois, Project Number: 071–EE115/IL06–S961–006.

Nature Of Requirement: HUD's regulation at 24 CFR 891.100(d) prohibits amendment of the capital advance fund reservation prior to initial closing. HUD's regulation at 24 CFR 891.165 provides that the duration of a capital advance fund reservation is 18 months from the date of issuance with limited exceptions up to 24 months as approved by HUD on a case-by-case basis.

Granted By: William C. Apgar, Assistant Secretary for Housing-Federal Housing Commissioner.

Date Granted: August 11, 2000.

Reason Waived: HUD determined that there was good cause for the waiver. The contractor increased his prices and the sponsor had exhausted all efforts to find additional funds from other sources. Additional time was needed to reprocess the firm commitment due to

the increase in construction costs and to initially endorse the project.

Contact: Willie Spearmon, Director, Office of Housing Assistance and Grant Administration, Department of Housing and Urban Development, 451 Seventh Street, SW., Washington, DC 20410, telephone: (202) 708–3000.

• *Regulations:* 24 CFR 891.100(d) and 891.165.

Project/Activity: Selfhelp/United Help Kissena Apartments, Flushing, New York, Project Number: 012–EE224/NY36–S971–011.

Nature Of Requirement: HUD's regulation at 24 CFR 891.100(d) prohibits amendment of the capital advance fund reservation prior to initial closing. HUD's regulation at 24 CFR 891.165 provides that the duration of a capital advance fund reservation is 18 months from the date of issuance with limited exceptions up to 24 months as approved by HUD on a case-by-case basis.

Granted By: William C. Apgar, Assistant Secretary for Housing-Federal Housing Commissioner.

Date Granted: August 11, 2000.

Reason Waived: HUD determined that there was good cause for the waiver. The project encountered delays in securing zoning approvals, the project was economically designed, comparable to similar projects developed in the area, and the sponsor/owner had exhausted their resources.

Contact: Willie Spearmon, Director, Office of Housing Assistance and Grant Administration, Department of Housing and Urban Development, 451 Seventh Street, SW., Washington, DC 20410, telephone:(202) 708–3000.

• *Regulations:* 24 CFR 891.100(d) and 891.165.

Project/Activity: ASI-Missoula, Missoula, Montana, Project Number: 93–HD013/MY99–Q961–001.

Nature Of Requirement: HUD's regulation at 24 CFR 891.100(d) prohibits amendment of the capital advance fund reservation prior to initial closing. HUD's regulation at 24 CFR 891.165 provides that the duration of a capital advance fund reservation is 18 months from the date of issuance with limited exceptions up to 24 months as approved by HUD on a case-by-case basis.

Granted By: William C. Apgar, Assistant Secretary for Housing-Federal Housing Commissioner.

Date Granted: August 21, 2000.

Reason Waived: HUD determined that there was good cause for the waiver. The owner encountered delays due to the loss of two sites for the project and the death of the specialist who had been working very diligently on the project. The project was economically designed, comparable to other similar projects developed in the jurisdiction, and the owner had exhausted all possible efforts to obtain additional funds.

Contact: Willie Spearmon, Director, Office of Housing Assistance and Grant Administration, Department of Housing and Urban Development, 451 Seventh Street, SW., Washington, DC 20410, telephone: (202) 708–3000.

• *Regulations:* 24 CFR 891.100(d) and 891.165.

Project/Activity: Pomperaug Senior Housing, Southbury Twp., Connecticut, Project Number: 017–EE040/CT26–S971–008.

Nature Of Requirement: HUD's regulation at 24 CFR 891.100(d) prohibits amendment of the capital advance fund reservation prior to initial closing. HUD's regulation at 24 CFR 891.165 provides that the duration of a capital advance fund reservation is 18 months from the date of issuance with limited exceptions up to 24 months as approved by HUD on a case-by-case basis.

Granted By: William C. Apgar, Assistant Secretary for Housing-Federal Housing Commissioner.

Date Granted: September 26, 2000.

Reason Waived: HUD determined that there was good cause for the waivers. Delays were due to the owner obtaining design approval from the town of Southbury Planning and Zoning Commission. In addition, the project was modest in design, comparable to similar projects developed in the area, and the owner had made every attempt to secure additional funding from other sources.

Contact: Willie Spearmon, Director, Office of Housing Assistance and Grant Administration, Department of Housing and Urban Development, 451 Seventh Street, SW., Washington, DC 20410, telephone: (202) 708–3000.

• *Regulations:* 24 CFR 891.100(d) and 891.165.

Project/Activity: Cold Spring House, Forstburgh, New York, Project Number: 012–HD075/NY36–Q971–004.

Nature Of Requirement: HUD's regulation at 24 CFR 891.100(d) prohibits amendment of the capital advance fund reservation prior to initial closing. HUD's regulation at 24 CFR 891.165 provides that the duration of a capital advance fund reservation is 18 months from the date of issuance with limited exceptions up to 24 months as approved by HUD on a case-by-case basis.

Granted By: William C. Apgar, Assistant Secretary for Housing-Federal Housing Commissioner.

Date Granted: September 26, 2000.

Reason Waived: HUD determined that there was good cause for the waiver. The owner was unable to obtain additional funds, and the project would receive complete property tax exemption from the locality as well as support service funding from the state. Additionally, a delay of over one year was encountered due to issues associated with the incorporation of the owner.

Contact: Willie Spearmon, Director, Office of Housing Assistance and Grant Administration, Department of Housing and Urban Development, 451 Seventh Street, SW., Washington, DC 20410, telephone: (202) 708–3000.

• *Regulation:* 24 CFR 891.105 and 891.410(c).

Project Activity: Sugarloaf Village, Diamond City, Arkansas, Project Number 082–EE091.

Nature of Requirement: HUD regulations at 24 CFR Part 891 require that occupancy be limited to Very Low Income (VLI) elderly persons (*i.e.,* households composed of one or more persons at least one of whom is 62 years of age at time of initial occupancy).

Granted By: William C. Apgar, Assistant Secretary for Housing-Federal Housing Commissioner.

Date Granted: September 12, 2000.

Reason Waived: HUD determined that there was good cause for the waiver. The Little Rock Multifamily Program Center requested an age and income waiver for this Section 202/PRAC project. The project is only 4.3 percent occupied after 11 months of occupancy and is unable to attract sufficient elderly tenants because of insufficient local demand. These waivers will allow project management flexibility in attempting to rent up vacant units, thereby maintaining project viability and preventing foreclosure of the project. The waivers will allow elderly and near-elderly families and individuals who are at or over the age of 55 and low income to apply for admission to the project in addition to very low elderly families who will continue to receive an admissions preference.

Contact: Frank M. Malone, Director, Office of Asset Management, Department of Housing and Urban Development, 451 Seventh Street SW., Room 6160, Washington, DC 20410; telephone (202) 708–3730.

• *Regulation:* 24 CFR 891.120(b), 891.310(b)(1) and (b)(2).

Project/Activity: Options Supported Housing Project V, Scattered Site: Huntington, Huntington Sta., Centereach and Selden, New York, Project Number: 012–HD085/NY36–Q981–006.

Nature Of Requirement: HUD's regulations at 24 CFR 891.120(b), 891.310(b)(1) and (b)(2) govern accessibility standards for the Section 811 program.

Granted By: William C. Apgar, Assistant Secretary for Housing-Federal Housing Commissioner.

Date Granted: August 11, 2000.

Reason Waived: HUD determined there was good cause for the waiver. The project consisted of acquisition with rehabilitation of four group homes for persons with chronic mental illness. One of the sites was designed to be accessible for persons with mobility impairments. To make all units fully accessible for persons with mobility impairments would make the project, as a whole, financially unfeasible. The consumers served under the sponsor's existing programs did not generally require accessible housing, therefore accessibility of the one site was more than adequate for potential residents.

Contact: Willie Spearmon, Director, Office Of Housing Assistance and Grant Administration, Department of Housing and Urban Development, 451 Seventh Street, SW., Washington, DC 20410–7000, telephone: (202) 708–3000.

• *Regulation:* 24 CFR 891.165.

Project/Activity: Abraham Lincoln Center, Chicago, Illinois, Project Number: 071–HD095/IL06–Q961–010.

Nature Of Requirement: HUD's regulation at 24 CFR 891.165 provides that the duration of a capital advance fund reservation is 18 months from the date of issuance with limited exceptions up to 24 months as approved by HUD on a case-by-case basis.

Granted By: William C. Apgar, Assistant Secretary for Housing-Federal Housing Commissioner.

Date Granted: July 13, 2000.

Reason Waived: HUD determined that there was good cause for the waiver. The City had required the sponsor to obtain the approval of each alderman and the alderman had, in turn, required the approval of each of the communities involved.

Contact: Willie Spearmon, Director, Office of Housing Assistance and Grant Administration, Department of Housing and Urban Development, 451 Seventh Street, SW., Washington, DC 20410, telephone: (202) 708–3000.

• *Regulation:* 24 CFR 891.165.

Project/Activity: Eaton Knolls, Town of Islip, New York, Project Number: 012–HD076/NY36–Q971–005.

Nature Of Requirement: HUD's regulation at 24 CFR 891.165 provides that the duration of a capital advance fund reservation is 18 months from the date of issuance with limited exceptions up to 24 months as approved by HUD on a case-by-case basis.

Granted By: William C. Apgar, Assistant Secretary for Housing-Federal Housing Commissioner.

Date Granted: July 25, 2000.

Reason Waived: HUD determined that there was good cause for the waiver. Problems were discovered with the title policy which have subsequently been resolved to the satisfaction of all parties.

Contact: Willie Spearmon, Director, Office of Housing Assistance and Grant Administration, Department of Housing and Urban Development, 451 Seventh Street, SW., Washington, DC 20410, telephone: (202) 708–3000.

• *Regulation:* 24 CFR 891.165.

Project/Activity: Accessible Space, Inc., Birmingham, Alabama, Project Number: 062–HD041/AL09–Q981–004.

Nature Of Requirement: HUD's regulation at 24 CFR 891.165 provides that the duration of a capital advance fund reservation is 18 months from the date of issuance with limited exceptions up to 24 months as approved by HUD on a case-by-case basis.

Granted By: William C. Apgar, Assistant Secretary for Housing-Federal Housing Commissioner.

Date Granted: August 3, 2000.

Reason Waived: HUD determined that there was good cause to grant this waiver. The project had been delayed due to neighborhood opposition.

Contact: Willie Spearmon, Director, Office of Housing Assistance and Grant Administration, Department of Housing and Urban Development, 451 Seventh Street, SW., Washington, DC 20410, telephone: (202) 708–3000.

• *Regulation:* 24 CFR 891.165.

Project/Activity: Ryder Assisted Care II, Humacao, Puerto Rico, Project Number: 065–HD010/RQ46–Q961–003.

Nature Of Requirement: HUD's regulation at 24 CFR 891.165 provides that the duration of a capital advance fund reservation is 18 months from the date of issuance with limited exceptions up to 24 months as approved by HUD on a case-by-case basis.

Granted By: William C. Apgar, Assistant Secretary for Housing-Federal Housing Commissioner.

Date Granted: August 3, 2000.

Reason Waived: HUD determined that there was good cause for the waiver. Time delays were directly attributable to third parties since required local government endorsements took more than a year to be approved.

Contact: Willie Spearmon, Director, Office of Housing Assistance and Grant Administration, Department of Housing and Urban Development, 451 Seventh Street, SW., Washington, DC 20410, telephone: (202) 708–3000.

• *Regulation:* 24 CFR 891.165.

Project/Activity: St. Anthony Homes, Baltimore, Maryland, Project Number: 052–HD029/MD06–Q971–003.

Nature Of Requirement: HUD's regulation at 24 CFR 891.165 provides that the duration of a capital advance fund reservation is 18 months from the date of issuance with limited exceptions up to 24 months as approved by HUD on a case-by-case basis.

Granted By: William C. Apgar, Assistant Secretary for Housing-Federal Housing Commissioner.

Date Granted: August 4, 2000.

Reason Waived: HUD determined that there was good cause for the waiver. Additional time was needed to prepare and submit the initial closing package.

Contact: Willie Spearmon, Director, Office of Housing Assistance and Grant Administration, Department of Housing and Urban Development, 451 Seventh Street, SW., Washington, DC 20410, telephone: (202) 708–3000.

• *Regulation:* 24 CFR 891.165.

Project/Activity: Moorestown Consumer Home, Philadelphia, Pennsylvania, Project Number: 035–HD038/NJ39–Q971–077.

Nature Of Requirement: HUD's regulation at 24 CFR 891.165 provides that the duration of a capital advance fund reservation is 18 months from the date of issuance with limited exceptions up to 24 months as approved by HUD on a case-by-case basis.

Granted By: William C. Apgar, Assistant Secretary for Housing-Federal Housing Commissioner.

Date Granted: August 10, 2000.

Reason Waived: HUD determined that there was good cause for the waiver. The sponsor could not secure control of the site identified, had to secure bridge financing. Additionally, HUD required the sponsor to hire an architect due to the nature and amount of work involved.

Contact: Willie Spearmon, Director, Office of Housing Assistance and Grant Administration, Department of Housing and Urban Development, 451 Seventh Street, SW., Washington, DC 20410, telephone: (202) 708–3000.

• *Regulation:* 24 CFR 891.165.

Project/Activity: Royale Gardens, Chicago, Illinois, Project Number: 071–EE125/IL06–S961–016.

Nature Of Requirement: HUD's regulation at 24 CFR 891.165 provides that the duration of a capital advance fund reservation is 18 months from the date of issuance with limited exceptions up to 24 months as approved by HUD on a case-by-case basis.

Granted By: William C. Apgar, Assistant Secretary for Housing-Federal Housing Commissioner.

Date Granted: August 11, 2000.

Reason Waived: HUD determined that there was good cause for the waiver. The project had been delayed due to the City of Chicago imposing new requirements regarding detailed breakdowns for landscaping costs.

Contact: Willie Spearmon, Director, Office of Housing Assistance and Grant Administration, Department of Housing and Urban Development, 451 Seventh Street, SW., Washington, DC 20410, telephone: (202) 708–3000.

• *Regulation:* 24 CFR 891.165.

Project/Activity: Hogar Aurora, Aibonito, Puerto Rico, Project Number: 056–HD015/RQ46–Q971–002.

Nature Of Requirement: HUD's regulation at 24 CFR 891.165 provides that the duration of a capital advance fund reservation is 18 months from the date of issuance with limited exceptions up to 24 months as approved by HUD on a case-by-case basis.

Granted By: William C. Apgar, Assistant Secretary for Housing-Federal Housing Commissioner.

Date Granted: August 11, 2000.

Reason Waived: HUD determined that there was good cause for the waiver. The delay in initial closing was directly attributable to the high cost of construction on the island and the lack of an available contractor to develop the project within the cost limits.

Contact: Willie Spearmon, Director, Office of Housing Assistance and Grant Administration, Department of Housing and Urban Development, 451 Seventh Street, SW., Washington, DC 20410, telephone: (202) 708–3000.

• *Regulation:* 24 CFR 891.165.

Project/Activity: Three Bridges, Philadelphia, Pennsylvania, Project Number: 031–EE042/NJ39–S961–008.

Nature Of Requirement: HUD's regulation at 24 CFR 891.165 provides that the duration of a capital advance fund reservation is 18 months from the date of issuance with limited exceptions up to 24 months as approved by HUD on a case-by-case basis.

Granted By: William C. Apgar, Assistant Secretary for Housing-Federal Housing Commissioner.

Date Granted: August 16, 2000.

Reason Waived: HUD determined that there was good cause for the waiver. The project was pending a judicial decision concerning settlement of a dispute regarding site control.

Contact: Willie Spearmon, Director, Office of Housing Assistance and Grant Administration, Department of Housing and Urban Development, 451 Seventh Street, SW., Washington, DC 20410, telephone: (202) 708–3000.

• *Regulation:* 24 CFR 891.165.

Project/Activity: ARC Housing, Wauwatosa, Wisconsin, Project Number: 075–HD053/WI39–Q971–004.

Nature Of Requirement: HUD's regulation at 24 CFR 891.165 provides that the duration of a capital advance fund reservation is 18 months from the date of issuance with limited exceptions up to 24 months as approved by HUD on a case-by-case basis.

Granted By: William C. Apgar, Assistant Secretary for Housing-Federal Housing Commissioner.

Date Granted: August 16, 2000.

Reason Waived: HUD determined that there was good cause for the waiver. The sponsor needed additional time to work out the completion and submission of the closing documents. Additionally, the sponsor experienced problems with lead based paint removal, underground storage tanks, an elevator and relocation.

Contact: Willie Spearmon, Director, Office of Housing Assistance and Grant Administration, Department of Housing and Urban Development, 451 Seventh Street, SW., Washington, DC 20410, telephone: (202) 708–3000.

• *Regulation:* 24 CFR 891.165.

Project/Activity: Absecon Consumer Home, Philadelphia, Pennsylvania, Project Number: 031–HD084/NJ39–Q971–009.

Nature Of Requirement: HUD's regulation at 24 CFR 891.165 provides that the duration of a capital advance fund reservation is 18 months from the date of issuance with limited exceptions up to 24 months as approved by HUD on a case-by-case basis.

Granted By: William C. Apgar, Assistant Secretary for Housing-Federal Housing Commissioner.

Date Granted: August 16, 2000.

Reason Waived: HUD determined that there was good cause for the waiver. The sponsor had to locate a new site for the project and this was the sponsor's first experience with modular units (which it was using to replace the existing facility on the site and hoped to replicate in the future).

Contact: Willie Spearmon, Director, Office of Housing Assistance and Grant Administration, Department of Housing and Urban Development, 451 Seventh Street, SW., Washington, DC 20410, telephone: (202) 708–3000.

• *Regulation:* 24 CFR 891.165.

Project/Activity: Ft. Washington Adventist Apartments—New Life Homes, Albuquerque, New Mexico, Project Number: 116–HD015/NM16–Q001–001.

Nature Of Requirement: HUD's regulation at 24 CFR 891.165 provides that the duration of a capital advance fund reservation is 18 months from the date of issuance with limited exceptions up to 24 months as approved by HUD on a case-by-case basis.

Granted By: William C. Apgar, Assistant Secretary for Housing-Federal Housing Commissioner.

Date Granted: August 30, 2000.

Reason Waived: HUD determined that there was good cause for the waiver. The project had been delayed due to zoning issues and the need for local government approval of its water/sewer classification.

Contact: Willie Spearmon, Director, Office of Housing Assistance and Grant Administration, Department of Housing and Urban Development, 451 Seventh Street, SW., Washington, DC 20410, telephone: (202) 708–3000.

• *Regulation:* 24 CFR 891.165.

Project/Activity: Ray Rawson Villa, Las Vegas, Nevada, Project Number: 125–HD064/NV25–Q971–001.

Nature Of Requirement: HUD's regulation at 24 CFR 891.165 provides that the duration of a capital advance fund reservation is 18 months from the date of issuance with limited exceptions up to 24 months as approved by HUD on a case-by-case basis.

Granted By: William C. Apgar, Assistant Secretary for Housing-Federal Housing Commissioner.

Date Granted: August 30, 2000.

Reason Waived: HUD determined that there was good cause for the waiver. The project experienced delays while the sponsor raised funds to meet the increased construction costs.

Contact: Willie Spearmon, Director, Office of Housing Assistance and Grant Administration, Department of Housing and Urban Development, 451 Seventh Street, SW., Washington, DC 20410, telephone: (202) 708–3000.

• *Regulation:* 24 CFR 891.165.

Project/Activity: Timothy Place, Plum Borough, Allegheny County, Pennsylvania, Project Number: 033–HD048/PA28–Q971–010.

Nature Of Requirement: HUD's regulation at 24 CFR 891.165 provides that the duration of a capital advance fund reservation is 18 months from the date of issuance with limited exceptions up to 24 months as approved by HUD on a case-by-case basis.

Granted By: William C. Apgar, Assistant Secretary for Housing-Federal Housing Commissioner.

Date Granted: August 30, 2000.

Reason Waived: HUD determined that there was good cause for the waiver. The first two approved sites were abandoned due to the sponsor's inability to secure additional sewer taps through the Department of Environmental Protection and to obtain a zoning variance from the local government.

Contact: Willie Spearmon, Director, Office of Housing Assistance and Grant Administration, Department of Housing and Urban Development, 451 Seventh Street, SW., Washington, DC 20410, telephone: (202) 708–3000.

• *Regulation:* 24 CFR 891.165.

Project/Activity: Sumac Trail Apartments, Milwaukee, Wisconsin, Project Number: 075–HD050/WI39–Q971–001.

Nature Of Requirement: HUD's regulation at 24 CFR 891.165 provides that the duration of a capital advance fund reservation is 18 months from the date of issuance with limited exceptions up to 24 months as approved by HUD on a case-by-case basis.

Granted By: William C. Apgar, Assistant Secretary for Housing-Federal Housing Commissioner.

Date Granted: September 8, 2000.

Reason Waived: HUD determined that there was good cause for the waiver. Additional time was needed by the sponsor to correct deficiencies to their firm commitment application.

Contact: Willie Spearmon, Director, Office of Housing Assistance and Grant Administration, Department of Housing and Urban Development, 451 Seventh Street, SW., Washington, DC 20410, telephone: (202) 708–3000.

• *Regulation:* 24 CFR 891.165.

Project/Activity: New Opportunities For Waterbury, Waterbury, Connecticut, Project Number: 017–HD008.

Nature Of Requirement: HUD's regulation at 24 CFR 891.165 provides that the duration of a capital advance fund reservation is 18 months from the date of issuance with limited exceptions up to 24 months as approved by HUD on a case-by-case basis.

Granted By: William C. Apgar, Assistant Secretary For Housing-Federal Housing Commissioner.

Date Granted: September 12, 2000.

Reason Waived: HUD determined that there was good cause for the waiver. Additional time was needed by the sponsor to secure control of two of the four sites.

Contact: Willie Spearmon, Director, Office of Housing Assistance and Grant Administration, Department of Housing and Urban Development, 451 Seventh Street, SW., Washington, DC 20410, telephone: (202) 708–3000.

• *Regulation:* 24 CFR 891.165.

Project/Activity: Nashville Supportive Housing Development, Nashville, Tennessee, Project Number: 086–HD016/TN43–Q971–001.

Nature Of Requirement: HUD's regulation at 24 CFR 891.165 provides that the duration of a capital advance fund reservation is 18 months from the date of issuance with limited exceptions up to 24 months as approved by HUD on a case-by-case basis.

Granted By: William C. Apgar, Assistant Secretary For Housing-Federal Housing Commissioner.

Date Granted: September 25, 2000.

Reason Waived: HUD determined that there was good cause for the waiver. The sponsor was unable to secure proper zoning on the original site and had to locate an alternate site.

Contact: Willie Spearmon, Director, Office of Housing Assistance and Grant Administration, Department of Housing and Urban Development, 451 Seventh Street, SW., Washington, DC 20410, telephone: (202) 708–3000.

• *Regulation:* 24 CFR 891.525.

Project/Activity: Brooklyn Home for Aged People, New York, New York, Project Number: 012–EH059/NY36–T781–032.

Nature Of Requirement: HUD's regulation at 24 CFR 891.165 provides that the duration of a capital advance fund reservation is 18 months from the date of issuance with limited exceptions up to 24 months as approved by HUD on a case-by-case basis.

Granted By: William C. Apgar, Assistant Secretary for Housing-Federal Housing Commissioner.

Date Granted: September 8, 2000.

Reason Waived: HUD determined that there was good cause for the waiver. The project was beset with problems, including the fact that the contractor took the project to arbitration over the slow rate of progress. The project was scheduled for completion on or before June 1984. In order to complete construction, the original mortgage was increased and the borrower arranged in 1988 for a second general contractor to complete construction. In an attempt to avoid any liability, the borrower filed for bankruptcy in 1989. The bankruptcy agreement stipulated that the supplemental loan be at 0 percent interest and this agreement was binding.

Contact: Willie Spearmon, Director, Office of Housing Assistance and Grant Administration, Department of Housing and Urban Development, 451 Seventh Street, SW., Washington, DC 20410, telephone: (202) 708–3000.

• *Regulation:* 24 CFR 891.575 and 891.610(c).

Project/Activity: Northview Apartments, Okemah, Oklahoma, Project Number 117–EH089.

Nature of Requirement: HUD's regulations at 24 CFR part 891 limit occupancy to very low income (VLI) elderly households where or one or more persons is at least 62 years of age at the time of initial occupancy.

Granted By: William C. Apgar, Assistant Secretary for Housing-Federal Housing Commissioner.

Date Granted: July 20, 2000.

Reason Waived: HUD determined that there was good cause for the waiver. The Kansas City multifamily HUB requested waiver of this regulation due to the limited market of elderly individuals and families. This project is located in a small rural community and has historically been unable to attract elderly families to fill vacancies. This waiver will expand the number of eligible households who can be admitted to the property allowing the owner additional, necessary flexibility in renting up units.

Contact: Frank M. Malone, Director, Office of Asset Management, Department of Housing and Urban Development, 451 Seventh Street SW., Room 6160, Washington, DC 20410; telephone: (202) 708–3730.

• *Regulations:* 24 CFR 891.575 and 891.610(c).

Project/Activity: IOOF Tower, Salt Lake City, Utah, Project No: 105–EH050.

Nature of Requirement: HUD's regulations at 24 CFR part 891 limit occupancy to very low income households composed of two or more persons at least one of whom is 62 years of age or older at the time of initial occupancy.

Granted By: William C. Apgar, Assistant Secretary for Housing-Federal Housing Commissioner.

Date Granted: September 12, 2000.

Reason Waived: HUD determined that there was good cause for the waiver. The Denver multifamily HUB requested an age waiver because the project had been unable to sustain occupancy due to the somewhat depressed surrounding neighborhood and declining demand for very low income elderly housing. The waiver allowed property management to rent up vacant units.

Contact: Frank M. Malone, Director, Office of Asset Management, Department of Housing and Urban Development, 451 Seventh Street SW., Room 6160, Washington, DC 20410; telephone: (202) 708–3730.

• *Regulation:* 24 CFR 891.575 and 610(c).

Project/Activity: Calvary Tower, Salt Lake City, Utah, Project Number: 105–EH048.

Nature Of Requirement: HUD's regulations at 24 CFR part 891 limit occupancy to very low income households composed of two or more persons at least one of whom is 62 years of age or older at the time of initial occupancy.

Granted By: William C. Apgar, Assistant Secretary for Housing-Federal Housing Commissioner.

Date Waived: September 20, 2000.

Reason Waived: HUD determined that there was good cause for the waiver. The Denver Multifamily Hub requested an age waiver for the project due to the soft market for elderly properties in the Salt Lake City area. The surrounding neighborhood of Calvary Tower is somewhat depressed which also contributes to vacancy problems. Even though the property is currently full, any long term vacancies would pose a financial strain on this property and there is only one applicant on the waiting list. Lowering the age requirement from 62 to 55 and older will allow project management flexibility in attempting to alleviate vacancy problems.

Contact: Frank M. Malone, Director, Office of Asset Management, Department of Housing and Urban Development, 451 Seventh Street SW., Room 6160, Washington, DC 20410; telephone: (202) 708–3730.

IV. Regulatory Waivers Granted by the Office of Multifamily Housing Assistance Restructuring (OHMAR)

For further information about the following waiver actions, please see the name of the person which immediately follows the description of the waiver granted.

- *Regulation:* 24 CFR 401.600.

Project/Activity: The following projects requested waivers to the 12-month limit at above-market rents (24 CFR 401.600):

FHA No.	Project name	State
06235027	Alexander Court	AL
06235337	Monroe Avenue	AL
08235040	Harmony Homes Apartments	AR
08235018	North Acres Apartments	AR
01711020	New Era Court	CT
01735106	Old Middletown High School	CT
06635031	Central Area Apts.	FL
06335044	Pana Villa Gardens	FL
17135076	Johnson Manor	ID
07335270	Retired Tigers	IN
09244036	Torre de San Miguel	MN
11655006	Clovis II	NM
11635097	Four Seasons	NM
11644046	King Arthur's Court Apts.	NM
11644047	Tradewinds Carriage Apts.	NM
01435022	Lincoln Arms	NY
04644069	Albright	OH
04635027	Danner Park Apts.	OH
04335090	Fairview II	OH
04335125	Urbana Hollow	OH
11744077	Paradise Corners	OK
03435014	Beckett Gardens	PA
03344180	Bethesda Wilkinsburg	PA
03455033	Crosby	PA
03335006	Harriet Tubman Terrace	PA
03344157	Jeannette Gardens	PA
03355008	Liberty Park Apts.	PA
03344040	Palisades Manor	PA
03344119	Parkview Manor Apts.	PA
01644066	1890 House	RI
01635010	Roger & Roger	RI
05435075	St. Stephens Apts.	SC
08744033	Jaycee Progress, Inc.	TN
08744033	Jaycee Progress, Inc.	TN
08635039	Pulaski Terrace Apts. I	TN
11344036	Abilene North Apts.	TX
05935009	Belaire Manor	TX
11435063	Cleme Manor	TX
11335005	Prince Hall Garden II	TX
11435017	Prince Hall Plaza	TX
11435005	Prince Hall Village	TX
11435077	Rolland Hilliard	TX
11435046	Settegast	TX
13344034	Woodcrest Apartments	TX
05135040	Caru	VA
05135117	Caru East	VA
05135111	Dorchester Square	VA
05135034	Kings Court	VA
12735237	Burien Haus	WA
12735144	Omak Stampede	WA
17144040	Pine Villa	WA
07535078	Goodman Homes	WI
07535071	Oakwood Haven Vine Court Apts.	WI
07535077	Oakwood Haven Vine Court Apts.	WI
07535078	Pioneer Villa Goodman Homes	WI
07535076	Pioneer Villa Goodman Homes	WI
07535077	Vine Court Apts.	WI

FHA No.	Project name	State
10935035	Westgate Apartments	WY

Nature of Requirement: HUD's regulation at 24 CFR 401.600 requires that projects be marked down to market rents within 12 months of their first expiration date after January 1, 1998. The intent of this provision is to ensure timely processing of requests for restructuring, and that the properties will not default on their FHA insured mortgages during the restructuring process.

Granted By: Ira Peppercorn, Director of OMHAR.

Date Granted: July 11, 2000.

Reasons Waived: HUD determined that there was good cause for the waivers. The attached list of projects were not assigned to the PAEs in a timely manner or for which the restructuring analysis was unavoidably delayed due to no fault of the owner.

Contact: Dan Sullivan, Office of Multifamily Housing Assistance Restructuring, Department of Housing and Urban Development, Portals Building, Suite 400, 1280 Maryland Avenue SW., Washington, DC 20410; telephone (202) 708–0001.

- *Regulation:* 24 CFR 401.600.

Project/Activity: The following projects requested waivers to the 12-month limit at above-market rents (24 CFR 401.600):

FHA No.	Project name	State
06235045	Spring Creek	AL
08235039	Chicot Limited Partnership	AR
08235036	Haygood Neal Garden Apartments	AR
08235049	Pilgrim Rest Limited Partnership	AR
08235019	Smith Keys Village	AR
08244015	Village Park South I	AR
08244042	Village Park South II	AR
06735015	Shull Manor	FL
06344041	Sutton Place	FL
06344041	Sutton Place	FL
06344041	Sutton Place	FL
06344041	Sutton Place	FL
06735016	Tropical Manor	FL
06135006	Bethel Church Homes	GA
07435068	Benton Place	IA
07135341	Doyle family	IL
08335241	Lebanon Apts.	KY
08335251	Robinwood Park	KY
08335239	Sandefur Manor	KY
02355123	Park Gardens	MA
02344152	Rap-Up II B	MA
02238003	Dominican Court	ME
09235359	Falls South Apartments	MN
06535004	Canton Garden Apartments	MS
06535027	Eastview Apartments	MS
06535244	Hilldale Apartments	MS
06535159	Martin Luther King Memorial Apts.	MS
06535242	Oakdale Apartments	MS
09335068	Sherwood Inn	MT
01335060	Country Club Court	NY
01335048	Robinson Square	NY
01257044	Sumet I	NY
01335056	Summit Towers	NY
01332002	Woodburn Court	NY
11794009	Country Park	OK
11844025	Riverview Village	OK
05435037	Mt. Zion I	SC
05444005	Mt. Zion II	SC
11444026	Cedarwood Apartments	TX
10935028	Ranger Apartments	WY
10935040	Trails Apartments	WY

Nature of Requirement: HUD's regulation at 24 CFR 401.600 requires that projects be marked down to market rents within 12 months of their first expiration date after January 1, 1998. The intent of this provision is to ensure timely processing of requests for restructuring, and that the properties will not default on their FHA insured mortgages during the restructuring process.

Granted By: Ira Peppercorn, Director of OMHAR.

Date Granted: August 2, 2000.

Reason Waived: HUD determined that there was good cause for the waivers. The attached list of projects were not assigned to the PAEs in a timely manner and for which the restructuring analysis was unavoidably delayed due to no fault of the owner.

Contact: Dan Sullivan, Office of Multifamily Housing Assistance Restructuring, Department of Housing and Urban Development, Portals Building, Suite 400, 1280 Maryland

Avenue SW., Washington, DC 20410; telephone (202) 708–0001.

• *Regulation:* 24 CFR 401.600.

Project/Activity: The following projects requested waivers to the 12–month limit at above-market rents (24 CFR 401.600):

FHA No.	Project name	State
00035113	Benning Courts	DC
06344037	Forest Green	FL
06692002	Harlem Gardens	FL
06335042	Hastings Apartments	FL
06335034	Marion Manor	FL
06344051	Springfield Res I	FL
07444052	Green Valley Manor	IA
07235053	Cougill Apts	IL
08335253	Regency Park-Louisville	KY
06535048	Northland Village Apartments	MS
09355004	Hillview Apartments	MT
03535026	Delsea Gardens	NJ
11692502	Hobbs Apts.	NM
11692506	Quay Apts.	NM
01355007	Eljay Apartments	NY
01444028	Fight Village	NY
01344008	Syracuse Apts.	NY
01344072	Syracuse Rehab V	NY
01444035	Whitney Neighborhood	NY
04335138	Discovery 76	OH
11735129	Arbuckle Ridge	OK
11735130	Arbuckle Ridge	OK
11835060	Autumn Wood Apartments	OK
11744006	London Square	OK
11744077	Paradise Corners	OK
11744106	Southgate	OK
11835093	Willow Gardens	OK
11838006	Willow Rock Apartments	OK
03344098	First Erie Better Housing West	PA
03444815	Geneva House	PA
03435130	Hampton House	PA
03344044	Monview Heights	PA
03335081	Penn Towers	PA
03335004	Punxsutawney Sycamore	PA
03444049	Wayneview Apartments	PA
08192503	Crestview Manor	TN
08192502	Parkway East I	TN
08135023	Parkway East II	TN
08135047	Ridgley Manor	TN
08135051	Somerville Apts.	TN
08135069	Southside Manor	TN
08135014	Tulane I Apts.	TN
11344036	Abilene North Apts.	TX
11435225	Beverly Place	TX
11235257	Lake June Village	TX
11535021	Lulac Village Park	TX
11335004	Prince Hall Garden I	TX
08244031	Town North Apartments	TX
08244031	Town North Apartments	TX
11544037	Villa Madre	TX
05155001	Brightwood Apts.	VA
17135178	Court Arthur	WA
17144046	Parkview Apartments	WA
07535291	Fordem Towers	WI
07535168	Pine Creek I Apartments	WI
07535117	Woodridge Gardens	WI
04535006	Rivermont Homes	WV

Nature of Requirement: HUD's regulation at 24 CFR 401.600 requires that projects be marked down to market rents within 12 months of their first expiration date after January 1, 1998. The intent of this provision is to ensure timely processing of requests for restructuring, and that the properties will not default on their FHA insured mortgages during the restructuring process.

Granted By: Ira Peppercorn, Director of OMHAR.

Date Granted: August 16, 2000.

Reason Waived: HUD determined that there was good cause for the waivers. The attached list of projects were not assigned to the PAEs in a timely manner or for which the restructuring analysis was unavoidably delayed due to no fault of the owner.

Contact: Dan Sullivan, Office of Multifamily Housing Assistance Restructuring, Department of Housing and Urban Development, Portals Building, Suite 400, 1280 Maryland

Avenue SW., Washington, DC 20410; telephone (202) 708–0001.

• *Regulation:* 24 CFR 401.600.

Project/Activity: The following projects requested waivers to the 12-month limit at above-market rents (24 CFR 401.600):

FHA No.	Project name	State
06292002	Stonegate Village	AL
10135207	Arvada House	CO
00044142	Brookland Manor Apartments	DC
00044142	Brookland Manor Apartments	DC
00035110	Fairmont I Apartments	DC
00055068	W Street Apartments	DC
03235003	Banneker Heights	DE
06735048	Central Court Apartments	FL
06335030	Eastside Garden Apartments	FL
06335031	Eastside Terrace Apartments	FL
06335101	Oakdale Garden Apartments	FL
06735035	Seminole Garden Apartments	FL
06344051	Springfield Residential One	FL
06344051	Springfield Residential One	FL
06192505	Etheridge Court Apartments I	GA
14035074	Hausten Gardens	HI
07435130	Autumn Park Apartments	IA
12435028	Pocatello Properties	ID
07135339	Countryside Manor	IL
07135369	Pullman Wheelworks	IL
07344455	Weyerbacher Terrace Apartments	IN
07344455	Weyerbacher Terrace Apartments	IN
02344152	Rap-Up II B	MA
09235299	Park Place Apartments	MN
09335007	Big Sky Apartments	MT
09335074	Grande Villa Apartments	MT
03135185	Baldwin Oaks Apartments	NJ
11635015	Santa Rosa Apartments	NM
11635056	Villa Del Sol Apts	NM
01235193	Belmont Apartments	NY
01257029	Parkview Apartments	NY
01255173	Siloam House	NY
01235306	St. Joseph's Village	NY
01255012	Towne Gardens Housing Development	NY
04335204	Cambridge Village	OH
04335173	Knollwood Commons	OH
04335197	Liberty Commons	OH
04335153	Momentum 75	OH
04635388	Parkview Arms II	OH
04335100	Rehab Unlimited	OH
04335107	Townhomes Properties, Ltd No. 1	OH
04335084	U.S. #51 Apartments	OH
11735013	Country Cove Housing	OK
11744115	Hillcrest Green Apartments	OK
11744077	Paradise Corner Apartments	OK
11835084	Willow Creek Apartments	OK
11835084	Willow Creek Apartments	OK
11835080	Willow Park Apartments	OK
03344045	Bedcliff Apartments	PA
03344071	Bethome	PA
03344108	Colver Hotel Apartments	PA
03444808	Enon Toland Apartments	PA
03442029	Hedgerow Apartments	PA
03438017	Lincoln Towers	PA
03344050	Oliver Plaza Apartments	PA
03310002	Palisades Plaza	PA
01658501	Develco Apartments	RI
01644032	Develco Family Apartments	RI
08192504	Tulane II Apartments	TN
08135035	Warren Apartments	TN
11344036	Abilene North Apartments	TX
11435225	Beverly Place Apts	TX
11444026	Cedarwood Apartments	TX
11435023	Independent Missionary Village Apartments	TX
11535024	North Side Manor Apartments	TX
11492501	Oakhill Plaza Apartments	TX
11235070	Park Manor Apartments	TX
11235014	Prince Hall Chambre Apartments	TX
11235029	St. James Manor Apartments	TX
11344001	Villa Supreme Apartments	TX

FHA No.	Project name	State
11344001	Villa Supreme Apartments	TX
13344034	Woodcrest Apartments	TX
17144066	Hillcrest Apartments	WA
17144046	Parkview Apartments	WA
17144022	Richard Allen Apartments	WA
07535072	Coleman Manor	WI
07535024	Fairfield Homes	WI
07535240	Housing Facilities of Monticello	WI
07535073	Laona Manor	WI
07535081	Lena Plaza	WI

Nature of Requirement: HUD's regulation at 24 CFR 401.600 requires that projects be marked down to market rents within 12 months of their first expiration date after January 1, 1998. The intent of this provision is to ensure timely processing of requests for restructuring, and that the properties will not default on their FHA insured mortgages during the restructuring process.

Granted By: Ira Peppercorn, Director of OMHAR.

Date Granted: August 31, 2000.

Reasons Waived: HUD determined that there was good cause for the waivers. The attached list of projects were not assigned to the PAEs in a timely manner or for which the restructuring analysis was unavoidably delayed due to no fault of the owner.

Contact: Dan Sullivan, Office of Multifamily Housing Assistance Restructuring, Department of Housing and Urban Development, Portals Building, Suite 400, 1280 Maryland Avenue SW., Washington, DC 20410; telephone (202) 708–0001.

• *Regulations:* 24 CFR 401.600.

Project/Activity: The following projects requested waivers to the 12-month limit at above-market rents (24 CFR 401.600):

FHA No.	Project name	State
10135218	High Country Apartments	CO
00044150	Eleventh Street Apartments	DC
06135053	Lakeview Apartments	GA
06135037	Pine Valley Apartments	GA
07344381	Caravelle Commons Cooperative	IN
00055019	Glenarden I Apartments	MD
00055019	Glenarden I Apartments	MD
00012005	Glenarden II Apartments	MD
00012005	Glenarden II Apartments	MD
00012005	Glenarden II Apartments	MD
00012005	Glenarden II Apartments	MD
05235079	Perrywood Garden Apartments	MD
02235011	Maple Knolls Apartments	ME
02235011	Maple Knolls Apartments	ME
09335056	Eagles Manor No. 2	MT
04235042	Chip Apartments II	OH
04244008	Ralston Square Apartments	OH
04235180	Rockefeller Park Towers	OH
11235145	Belle Oaks Apartments	TX
13355006	Villa Del Norte Apartments	TX
13355006	Villa Del Norte Apartments	TX
13344034	Woodcrest Apartments	TX
13344034	Woodcrest Apartments	TX
05135057	Rivermont Apartments	VA

Nature of Requirement: HUD's regulation at 24 CFR 401.600 requires that projects be marked down to market rents within 12 months of their first expiration date after January 1, 1998. The intent of this provision is to ensure timely processing of requests for restructuring, and that the properties will not default on their FHA insured mortgages during the restructuring process.

Granted By: Ira Peppercorn, Director of OMHAR.

Date Granted: September 22, 2000.

Reason Waived: HUD determined that there was good cause for the waivers. The attached list of projects were not assigned to the PAEs in a timely manner or for which the restructuring analysis was unavoidably delayed due to no fault of the owner.

Contact: Dan Sullivan, Office of Multifamily Housing Assistance Restructuring, Department of Housing and Urban Development, Portals Building, Suite 400, 1280 Maryland Avenue SW., Washington, DC 20410; telephone (202) 708–0001.

V. Regulatory Waivers Granted by the Office of Public and Indian Housing

For further information about the following waiver actions, please see the name of the person which immediately follows the description of the waiver granted.

• *Regulation:* 24 CFR 950.980 as in effect at the time of grant award.

Project/Activity: A request was made by the Cheyenne River Housing Authority (CRHA), Eagle Butte, South Dakota, for a one-year extension of their FY 1994 FIC grant to continue support and funding for their Single Mother's Self-Sufficiency Program.

Nature of Requirement: While no longer in effect, HUD's regulations at 24 CFR 950.980 governed the Family Investment Center (FIC) program at the time of the initial grant award. The FIC program does not have current regulations and the NOFA does not provide guidance on grant term extensions. The application kit states that the grant term will be of three to five years duration, depending upon the activities undertaken.

Granted By: Harold Lucas, Assistant Secretary for Public and Indian Housing.

Date Granted: June 19, 2000.

Reason Waived: HUD determined that there was good cause for the waiver. The FIC grant awarded to the CRHA has funded the Single Mother's Self-Sufficiency Program which has provided basic life skills, training and transitional housing for many homeless single mothers, as well as educational opportunities to seventy-four young women, thirty-three of which have completed their entire educational plan; forty-one of the participating that have not completed their goals will be able to achieve them during this additional year of operating the program; the success of the program has prompted the Board of Directors to approve a pilot program for single fathers, providing the same services to men in the area; and the CRHA has been highly competent in submitting their annual reports and financial status reports to the Northern Plains ONAP in a timely manner.

Contact: Tracy C. Outlaw, National Office of Native American Programs (ONAP), Department of Housing and Urban Development, 1999 Broadway—Suite 3390, Denver, Colorado 80202, telephone: (303) 675–1600.

• *Regulation:* 24 CFR 963.10(d).

Project/Activity: Tampa Housing Authority, Florida, Public Housing Program.

Nature of Requirement: HUD's regulation at 24 CFR 963.10(d) restricts a public housing agency (PHA) from contracting with a resident-owned business in excess of $1,000,000.

Granted By: Harold Lucas, Assistant Secretary for Public and Indian Housing.

Date Granted: July 26, 2000.

Reason Waived: HUD determined that there was good cause for the waiver. Approval of the waiver permitted the PHA to exceed the limit for contracting with resident-owned businesses and closed two Regional Inspector General Audit findings against the PHA.

Contact: Gerald Benoit, Director, Real Estate and Housing Performance Division, Office of Public and Indian Housing, Department of Housing and Urban Development, 451 Seventh St. SW., Washington, DC 20410, telephone: (202) 708–0477.

• *Regulation:* 24 CFR 982.306(d).

Project/Activity: Vermont State Housing Authority, Vermont, Housing Choice Voucher Program.

Nature of Requirement: HUD's regulation at 24 CFR 982.306(d) limits the circumstances under which a public housing agency may approve the leasing of a unit if the owner of the unit is a close relative of the family.

Granted By: Harold Lucas, Assistant Secretary for Public and Indian Housing.

Date Granted: August 2, 2000.

Reason Waived: HUD determined that there was good cause for the waiver. Approval of the waiver permitted a voucher holder to lease a unit from a relative because of the unavailability of suitable vacant rental housing in the PHA's jurisdiction.

Contact: Gerald Benoit, Director, Real Estate and Housing Performance Division, Office of Public and Indian Housing, Department of Housing and Urban Development, 451 Seventh St. SW., Washington, DC 20410, telephone: (202) 708–0477.

• *Regulation:* 24 CFR 982.306(d).

Project/Activity: Saint Paul Public Housing Agency, Minnesota, Housing Choice Voucher Program.

Nature of Requirement: HUD's regulation at 24 CFR 982.306(d) limits the circumstances under which a public housing agency may approve the leasing of a unit if the owner of the unit is a close relative of the family.

Granted By: Harold Lucas, Assistant Secretary for Public and Indian Housing.

Date Granted: August 7, 2000.

Reason Waived: HUD determined that there was good cause for the waiver. Approval of the waiver permitted a large family to find suitable housing to lease under the housing choice voucher program. The availability of vacant units with three or more bedrooms in the PHA's jurisdiction was extremely low. The market area vacancy rate was less than one percent.

Contact: Gerald Benoit, Director, Real Estate and Housing Performance Division, Office of Public and Indian Housing, Department of Housing and Urban Development, 451 Seventh St. SW., Washington, DC 20410, telephone: (202) 708–0477.

• *Regulation:* 24 CFR 982.306(d).

Project/Activity: Northeast Nebraska Joint Housing Authority, Nebraska, Housing Choice Voucher Program

Nature of Requirement: HUD's regulation at 24 CFR 982.306(d) limits the circumstances under which a public housing agency (PHA) may approve the leasing of a unit if the owner of the unit is a close relative of the family.

Granted By: Harold Lucas, Assistant Secretary for Public and Indian Housing.

Date Granted: August 11, 2000.

Reason Waived: HUD determined that there was good cause for the waiver. Approval of the waiver permitted a voucher holder to lease a unit from a relative in a small rural area where there was limited availability of eligible housing units to lease under the program.

Contact: Gerald Benoit, Director, Real Estate and Housing Performance Division, Office of Public and Indian Housing, Department of Housing and Urban Development, 451 Seventh St. SW., Washington, DC 20410, telephone: (202) 708–0477.

• *Regulation:* 24 CFR 983.4(a)(3).

Project/Activity: Burlington Housing Authority (BHA), Vermont, Project-Based Certificate Program.

Nature of Requirement: HUD's regulation at 24 CFR 983.4(a)(3) governs HUD approval of PHA submissions of intent to attach Project based assistance to units. Project-based units proposed for attachment may not be under a tenant-based or Project-based HAP contract or otherwise committed through issuance of certificates or under agreements to enter into HAP contract.

Granted By: Harold Lucas, Assistant Secretary for Public and Indian Housing.

Date Granted: July 20, 2000.

Reason Waived: HUD determined that there was good cause for the waiver. Approval of the waiver permitted applicants on the BHA waiting list to be assisted sooner, since BHA will not be required to hold voucher assistance as long for future Project-based use, and the waiver also permitted improved utilization of BHA voucher funding during the ACC terms of voucher increments consistent with HUD policy to fully use units reserved under the ACC and allocated budget authority.

Contact: Gerald Benoit, Director, Real Estate and Housing Performance Division, Office of Public and Indian Housing, Department of Housing and Urban Development, 451 Seventh St. SW., Washington, DC 20410, telephone: (202) 708–0477.

• *Regulation:* 24 CFR 1000.214.

Project/Activity: A request was made by the Match-E-Be-Nash-Shw-Wish band of Pottawatomi Indians (MBPI), Door, Michigan, to submit their Indian Housing Plan (IHP) to the Eastern Woodlands beyond the due date of July 1, 1999.

Nature of Requirement: HUD's regulation at 24 CFR 1000.214 states that IHPs must be initially sent by the recipient to the Area ONAP no later than July 1. Section 1000.216 states that if the IHP is not initially sent by July 1, the recipient will not eligible for IHBG funds for that fiscal year.

Granted By: Harold Lucas, Assistant Secretary for Public and Indian Housing.

Date Granted: August 7, 2000.

Reason Waived: HUD determined that there was good cause for the waiver. The MBPI was unable to meet the submission date for the FY 2000 IHP due to circumstances beyond their control. The MBPI was federally recognized on August 23, 1999, and has spent most of the last year working to establish the basic elements for the MBPI's government and organization. Healthcare was the MBPI's first priority, so a health program was established. The small staff was unable to work on housing issues in addition to all other activities. The MBPI can now address the housing issues.

Contact: Tracy C. Outlaw, National Office of Native American Programs (ONAP), Department of Housing and Urban Development, 1999 Broadway—Suite 3390, Denver, Colorado 80202, Telephone: (303) 675–1600.

[FR Doc. 01–1537 Filed 1–17–01; 8:45 am]

BILLING CODE 4210–33–P

Federal Register

Thursday,
January 18, 2001

Part XIV

Department of Justice

Executive Order 13160 Guidance Document: Ensuring Equal Opportunity in Federally Conducted Education and Training Programs; Notice

DEPARTMENT OF JUSTICE

Executive Order 13160 Guidance Document: Ensuring Equal Opportunity in Federally Conducted Education and Training Programs

AGENCY: Department of Justice.

ACTION: Notice: Guidance document.

SUMMARY: This Guidance Document entitled ''Executive Order 13160 Guidance Document'' is being issued pursuant to Executive Order 13160, which was issued on June 23, 2000. Executive Order 13160 prohibits discrimination on the basis of race, sex, color, national origin, disability, religion, age, sexual orientation, and status as a parent in federally conducted education and training programs. The Executive Order was issued in order to achieve equal opportunity in all federally conducted education and training programs and is premised upon the notion that the federal government should hold itself to at least the same principles of nondiscrimination in educational opportunities as it applies to the educational programs and activities of recipients of federal financial assistance. Toward that end, the Executive Order is intended to supplement existing laws and regulations that already prohibit many forms of discrimination in both federally conducted and federally assisted educational programs. The purpose of this Guidance Document is to assist all federal agencies in complying with the nondiscrimination mandates of Executive Order 13160 by providing a basic framework for implementation of the Executive Order. Among the topics addressed in this Guidance Document are the scope of covered educational programs, applicable legal principles, examples of discriminatory conduct, enforcement procedures, remedies, and agency reporting requirements. The text of the Guidance Document appears at the end of this Notice.

DATES: Effective January 18, 2001.

ADDRESSES: Coordination and Review Section, Civil Rights Division, P.O. Box 66560, Washington, D.C., 20035–6560.

FOR FURTHER INFORMATION CONTACT: Merrily A. Friedlander, Chief, Coordination and Review Section, Civil Rights Division, (202) 307–2222.

Dated: January 11, 2001.

Janet Reno,

Attorney General, Department of Justice.

Executive Order 13160 Guidance Document

I. Introduction

On June 23, 2000, the President of the United States issued Executive Order 13160 in order to achieve equal opportunity in all federally conducted education and training programs. More specifically, Executive Order 13160 was designed to ensure nondiscrimination on the basis of race, sex, color, national origin, disability, religion, age, sexual orientation, and status as a parent in federally conducted education and training programs and activities.

Executive Order 13160 is premised upon the notion that the federal government should hold itself to at least the same principles of nondiscrimination in educational opportunities as it applies to the educational programs and activities of recipients of federal financial assistance. Toward that end, the Executive Order is intended to supplement existing laws and regulations that already prohibit many forms of discrimination in both federally conducted and federally assisted educational programs. Among the most significant of these nondiscrimination laws are the Rehabilitation Act of 1973, 29 U.S.C. 701 *et seq.*, as amended; the Age Discrimination in Employment Act of 1967, 29 U.S.C. 621, *et seq.*; Titles VI and VII of the Civil Rights Act of 1964, 42 U.S.C. 2000d, as amended; 42 U.S.C. 2000e-17, as amended; and Title IX of the Education Amendments of 1972, 20 U.S.C. 1681 *et seq.*

In order to achieve equal opportunity in all federally conducted education programs, Section 1–102 of Executive Order 13160 provides that:

> No individual, on the basis of race, sex, color, national origin, disability, religion, age, sexual orientation, or status as a parent, shall be excluded from participation in, be denied the benefits of, or be subjected to discrimination in, a federally conducted education or training program or activity.

All federal agencies that conduct education and training programs must therefore commit themselves to providing educational environments that are entirely free from discrimination based on race, sex, color, national origin, disability, religion, age, sexual orientation, and status as a parent.

Pursuant to section 5–501 of Executive Order 13160, this Guidance Document has been developed to assist all federal agencies in complying with the nondiscrimination mandates of the Executive Order. Among the topics addressed herein are the scope of covered educational programs, applicable legal principles, examples of discriminatory conduct, enforcement procedures, remedies, and agency reporting requirements.

This Guidance Document is intended only to provide a basic framework for implementation of Executive Order 13160. This Guidance Document is not intended to be a comprehensive guide for compliance. Rather, this Guidance Document is designed only to provide a starting point for agency implementation, and this Document's failure to address a particular issue should in no way be interpreted to mean that such an issue falls outside the scope of the nondiscrimination protections established by the Executive Order or this Guidance.

In order to supplement the basic principles established in this Guidance Document, it is anticipated that, from time to time, the Department of Justice will publish additional policies or guidance documents to assist with the enforcement of this Executive Order. In addition, section 5–505 of the Executive Order provides that, ''[u]pon request and to the extent practicable, the Attorney General shall provide advice and assistance to executive departments and agencies to assist in full compliance with this order.'' Responsibility for providing such advice and technical assistance is delegated to the Assistant Attorney General for Civil Rights, who shall conduct, handle, or supervise the performance of these functions.

II. Covered Education Programs and Activities

Executive Order 13160 applies to all federally conducted education and training programs and activities. Pursuant to section 2–201, ''federally conducted education and training programs'' include those that are ''conducted, operated, or undertaken by'' an executive department or agency.

Section 2–202 of the Executive Order provides that federally conducted ''education and training programs and activities'' may include, but are not limited to, the following:

(1) formal schools,
(2) extracurricular activities,
(3) academic programs,
(4) occupational training,
(5) scholarships and fellowships,
(6) student internships,
(7) training for industry members,
(8) summer enrichment camps, and
(9) teacher training programs.

As this definition makes clear, education programs covered by

Executive Order 13160 may include both long-term, formal academic institutions (such as Department of Defense Dependents Schools, Department of Defense Domestic Dependent Elementary and Secondary Schools, and elementary or secondary schools operated by the Department of Interior, Bureau of Indian Affairs), as well as short-term job training programs (such as computer training courses for federal employees).

Some examples [1] of the types of education and training programs and activities that might be covered by Executive Order 13160 are discussed below:

Ex. 1. The Office of Government Ethics runs an agency ethics training course for federal employees from other agencies.

Ex. 2. The Federal Deposit Insurance Corporation operates a small computer school which teaches state examiners to analyze the weaknesses in the supervision of a small bank data processing operation.

Ex. 3. The Department of Veteran Affairs (VA) runs the VA Home Loan Training Program, which offers information and training to numerous private sector enterprises that cooperate in providing VA home loan benefits.

Ex. 4.The Nuclear Regulatory Commission provides radiation control training for state and local government personnel under the State Agreements Program.

Ex. 5. The Federal Bureau of Investigation (FBI) runs the FBI National Academy, an 11-week multi-disciplinary program in Quantico, Virginia, for federal, state, local, and foreign officers who are considered to have potential for further advancement in their careers.

Ex. 6. The Department of Housing and Urban Development operates the Community First Leadership Program, which provides in-depth training for representatives from state and local governments and non-profit organizations involved in housing and community development programs.

Ex. 7. The Maritime Administration conducts a Firefighting Training Program for private, licensed and unlicensed U.S. seafarers, who pay a fee for instruction in fire-fighting safety.

Ex. 8. The United States Department of Agriculture (USDA) operates the Graduate School, USDA, which provides career-related continuing education courses primarily designed to meet the educational needs of government employees.

Ex. 9. The Bureau of Alcohol, Tobacco, and Firearms operates the Anacostia Neighborhood Prevention Initiative, which provides crime prevention training to the public.

Ex. 10. The Peace Corps offers a World Wise Schools program to students interested in broadening their geographic and cultural horizons.

Ex. 11. The National Aeronautics and Space Administration conducts a tour of its facilities to educate the public about theSpace Shuttle Program.

Ex. 12. The Department of Justice conducts computer training courses to regularly update its employees on new software.

Ex. 13. The Federal Bureau of Prisons conducts an inmate boot camp to prepare inmates for reintegration into society.

Ex. 14. The U.S. Department of Agriculture conducts an annual Summer Intern Program for roughly 150 college students, who are hired to work with professional staff on projects related to the students' majors and career plans.

Ex. 15. The General Counsel's Office at the Federal Emergency Management Agency hires law students to work as unpaid student interns during the school year.

III. Exemptions From Coverage

Although Executive Order 13160 is intended to provide broad-based coverage for federally conducted education and training programs, section 3 of the Executive Order does provide some exemptions from coverage. As discussed below, there are several circumstances under which the nondiscrimination prohibitions of the Executive Order do not apply to certain federally conducted education and training programs.

Military Programs

Section 3–301 explicitly states that the Executive Order does not apply to ''members of the armed forces, military education or training programs, or authorized intelligence activities.'' Military education or training programs are defined as education programs conducted by the Department of Defense (or, where the Coast Guard is concerned, by the Department of Transportation) for the ''primary purpose'' of training members of the armed forces or meeting a statutory requirement to educate or train federal, state, or local civilian law enforcement officials pursuant to 10 U.S.C. chapter 18. This includes military academies, military programs that provide drug traffic prevention training to non-military law enforcement agencies, Department of Defense foreign language training and survival schools for non-military law enforcement agencies, and military training to non-military law enforcement agencies in the operation and maintenance of equipment used in the detection, monitoring, aerial reconnaissance, and communication intercepts of illegal drug trafficking.

Members of the armed forces, including students at military academies, are, however, protected from certain forms of discrimination pursuant to regulations currently enforced by the Department of Defense and individual service branches. *See, e.g.*, 32 CFR part 51, ''Department of Defense Military Equal Opportunity Program,'' and 32 CFR part 56, ''Nondiscrimination on the basis of Handicap in Programs and Activities Assisted or Conducted by Department of Defense.'' In addition, section 3–301 of Executive Order 13160 specifically provides that the Department of Defense shall develop procedures to protect the rights of, and to provide redress to, civilians involved in Department of Defense federally conducted military education and training programs if such civilians are not otherwise protected by existing federal law from discrimination on the basis of race, sex, color, national origin, disability, religion, age, sexual orientation, or status as a parent.

Finally, it is important to emphasize that this exemption does not apply to the Department of Defense Dependent Schools and Department of Defense Domestic Dependent Elementary and Secondary Schools. These schools must comply with the Executive Order and with all applicable legal principles set forth in this Guidance Document.

Affirmative Action

Any otherwise lawful affirmative action plan or program is exempt from coverage under the Executive Order. Pursuant to section 3–302, the Executive Order ''does not apply to, affect, interfere with, or modify the operation of any otherwise lawful affirmative action plan or program.''

Programs Established Consistent With Federal Law

Section 3–303 of the Executive Order provides that an individual shall not be deemed subject to discrimination by virtue of his or her ''exclusion from the benefits of a program established consistent with federal law or limited by federal law to individuals of a particular race, sex, color, disability, national origin, age, religion, sexual orientation, or status as a parent different from his or her own.'' For example, pursuant to 25 CFR §§ 31.1 and 31.3, education or training programs or activities conducted by the Department of Interior's Bureau of Indian Affairs are, subject to a few exceptions, limited to Native American students ''of one-fourth or more degree of Indian blood.''

Bureau of Indian Affairs Programs

Section 3–304 of the Executive Order exempts from coverage any ceremonial or similar education or training program or activity of a school conducted by the Department of Interior's Bureau of

[1] These examples were drawn from data provided by various federal agencies during the development of Executive Order 13160. The programs enumerated above, however, are not necessarily still in existence and, in some cases, are merely hypothetical examples.

Indian Affairs, provided such program is ''culturally relevant'' to the children represented in the school. The Executive Order defines ''culturally relevant'' as any class, program, or activity that is ''fundamental'' to a tribe's ''culture, customs, traditions, heritage, or religion.'' For example, certain educational classes involving traditional Native American dance instruction may be ''culturally relevant'' to the children represented in the school and therefore exempt from coverage under the Executive Order. In making determinations as to whether classes, programs, or activities are ''culturally relevant,'' substantial deference shall be given to the views of the relevant tribes.

Selections of Foreign Nationals and Selections Made Outside the Executive Branch

Section 3–305 provides an exemption for selections of foreign nationals based on national origin if the selections pertain to participation in covered education programs or activities that ''primarily concern national security or foreign policy matters.'' Thus, for example, the Executive Order would not cover the selection of participants, on the basis of national origin, for the Department of State's Antiterrorism Assistance training programs if the primary mission of these programs is to train foreign nationals in deterring and managing terrorist threats.

Section 3–305 further provides an exemption for ''selections or other decisions made by entities outside the executive branch.'' For example, if a local school district selects students to participate in a federally conducted education program, the selection decisions of the local school district would not be subject to Executive Order 13160 as they represent selection decisions made by an entity outside the executive branch.[2] However, the students selected for participation in the federally conducted education program would be protected from discrimination under Executive Order 13160 during the duration of their participation in the federally education conducted program.

In addition, section 3–305 provides that it ''shall be the policy of the executive branch that education or training programs or activities shall not be available to entities that select persons for participation in violation of Federal or State law.'' Thus, if a company responsible for selecting employees to participate in a federally conducted education program were to refuse to consider selecting members of a particular race in violation of Title VII of the Civil Rights Act of 1964, as amended, executive departments should, as a matter of policy, refrain from making their educational programs available to such a company.

Age-Based Admissions

Section 3–306 provides an exemption for age-based admissions to federally conducted education and training programs if such programs have ''traditionally been age-specific'' or ''must be age-limited for reasons related to health or national security.'' *See* Section XI of this Guidance Document for further information regarding these age-related exemptions.

Final Determinations Regarding Coverage and Exemptions

As a general matter, Executive Order 13160 will apply to all federally conducted education and training programs or activities not subject to a specific exemption set forth in Section 3 of the Executive Order. Executive departments or agencies and individuals with questions regarding whether a particular program or activity is subject to Executive Order 13160 should contact the Department of Justice's Civil Rights Division.

Pursuant to section 2–203 of the Executive Order, the Attorney General is authorized to make final determinations as to whether a given program falls within the scope of covered education and training programs under section 2–202 or is excluded from coverage under section 3. *See* Section XIV(C), ''Administrative Enforcement,'' for further information pertaining to applicable procedures for requesting a final determination from the Attorney General regarding coverage of a particular program.

IV. Applicable Legal Principles

Executive Order 13160 requires executive departments and agencies to ensure nondiscrimination on the basis of race, sex, color, national origin, disability, religion, age, sexual orientation, and status as a parent in all federally conducted education and training programs. In order to comply with the antidiscrimination mandates of this Executive Order, agencies must ensure that individuals involved in federally conducted education and training programs and activities are not subjected to discrimination on the basis of any one of these protected characteristics. The most common forms of discrimination prohibited by the Executive Order are discussed below.

Disparate Treatment

Under Executive Order 13160, all individuals involved in federally conducted education or training programs or activities must be treated equally and not be subjected to discrimination on the basis of race, sex, color, national origin, disability, religion, age, sexual orientation, or status as a parent. In order to comply with the Executive Order, all federal agencies that provide education or training programs or activities must ensure that individuals are not subjected to unjustified disparate treatment based on a protected status.[3] Examples of disparate treatment may include, but are not limited to:

- Selecting or failing to select an individual because of his or her protected status.
- Denying an individual any aid, benefit, or service offered in connection with a federally conducted education program because of his or her protected status.
- Failing to provide or allocate aid, benefits, or services as a result of an individual's protected status.
- Promoting or failing to promote an individual because of his or her protected status.
- Giving a positive or negative performance evaluation to an individual because of his or her protected status.
- Segregating an individual because of his or her protected status.
- Assigning an individual to a particular education or training program or activity, or a particular project, because of his or her protected status.
- Treating an individual less favorably with respect to the terms, conditions, or privileges of an education or training program or activity because of his or her protected status.

In addition to prohibiting individual instances of unjustified disparate treatment, the Executive Order also prohibits federal agencies from engaging in a ''pattern or practice'' of unlawful discrimination. Moreover, federal agencies may not rely on policies or practices that explicitly classify individuals on the basis of a protected characteristic absent a lawful justification for the use of such a classification.

It is important to note, however, that, under certain circumstances, compliance with the Executive Order may permit federal agencies to treat

[2] Such selection decisions might, however, be covered by other civil rights statutes, including Title VI of the Civil Rights Act of 1964, as amended, and Title IX of the Education Amendments of 1972, as amended.

[3] Throughout the remainder of this document, the term ''protected status'' may be used to refer generally to the nine protected characteristics which are the subject of this Executive Order: race, sex, color, national origin, disability, religion, age, sexual orientation, and status as a parent.

individuals differently on the basis of a protected characteristic. For example, under certain limited circumstances, agencies may legitimately treat individuals differently on the basis of sex if sex is a bona fide occupational qualification (BFOQ). Similarly, remedial situations may justify differential treatment. Moreover, in educational environments, narrowly-tailored measures designed to promote the educational benefits of diversity may lawfully treat individuals differently on the basis of a protected characteristic.

In some cases, the Executive Order may even require federal agencies to treat individuals differently in order to avoid discriminating against an individual on the basis of a protected characteristic. For example, the prohibition on religious discrimination may require an agency to provide an individual with a reasonable accommodation for religious practices as discussed in section X of this Guidance Document. Similarly, under many circumstances, federal agencies have an obligation to provide reasonable accommodations for individuals with disabilities. *See* Section IX of this Guidance Document. As such, the examples of disparate treatment enumerated above are designed merely to illustrate the types of conduct generally prohibited by this Executive Order and agencies must, of course, evaluate individual claims of disparate treatment on a case-by-case basis.

Hostile Environment

Pursuant to Executive Order 13160, a federal agency that provides education or training programs or activities must maintain a learning environment that is free of discrimination on the basis of race, sex, color, national origin, disability, religion, age, sexual orientation, and status as a parent.

- Federal agencies must ensure that the learning environment is free of harassment that is so severe, persistent, or pervasive that it alters the conditions of the federally conducted education or training program or activity for a participant on the basis of a protected status. Federal agencies should ensure that no individual is subject to a hostile environment that effectively denies or limits equal access to (*e.g.,* negatively affects an individual's participation or performance in) educational or training opportunities and benefits based on his or her protected status.
- Federal agencies should be aware that the sort of harassment that can create a hostile environment, when it is sufficiently severe, persistent, or pervasive, may take many forms including: slurs, epithets, jokes, cartoons, unwelcome advances, and other verbal or physical derogatory conduct that targets individuals on the basis of a protected status. Federal agencies should further be aware that hostile environments may be created by supervisors, instructors, administrators, other officials, or peers.

Disparate Impact

As a general matter, federally conducted education and training programs and activities may not utilize policies, procedures, criteria, or other methods of administration which, although facially neutral, have a disproportionate and adverse effect on certain individuals on the basis of a protected characteristic, unless:

(1) There is an educational or business necessity for the policy, procedure, criteria, or method of administration; and

(2) There are no equally effective alternative practices that would result in less adverse impact.

Retaliation

Federal agencies that operate education and training programs may not retaliate against any individual because he or she has raised concerns, reported claims, or filed complaints alleging discrimination. Federal agencies are similarly prohibited from retaliating against any individual who has testified, assisted, or participated in any manner in an investigation or other proceeding raising claims of discrimination.

Prohibited retaliation may take many forms including, but not limited to, intimidation, threats, coercion, harassment, discrimination, and adverse actions (*e.g.,* poor grades or performance evaluations) motivated by retaliatory purpose. Federal agencies must ensure that no individual is subject to any form of retaliation regardless of the merits (or lack thereof) of any underlying claim.

Specific Principles and Examples

The following sections address more specific applicable legal principles and examples of discriminatory conduct related to each of the nine protected bases covered by the Executive Order. It is important to note, however, that each of the following sections is intended merely to highlight certain specific forms of prohibited discrimination. The failure to include a particular legal principle (or a particular example of prohibited conduct) in one section of this Guidance Document should in no way be interpreted to mean that the legal principle (or prohibited conduct) is not covered with respect to another protected basis. Rather, all sections of this Guidance Document should be read in conjunction with each other to provide a fuller picture of the breadth and application of the Executive Order's antidiscrimination prohibitions.[4]

V. Discrimination on the Basis of Race

Federal agencies must ensure that no individual is discriminated against on the basis of his or her race in any federally conducted education or training program or activity.

- Federal agencies must ensure that all individuals are treated equally without regard to race in any federally conducted education or training program or activity.
- Federal agencies may not utilize policies, procedures, or methods of administration which, although facially neutral, have a disproportionate and adverse effect on participants or applicants on the basis of their race, unless there is an educational or business necessity for the use of such policies and there are no equally effective alternative practices that would result in less of a disproportionate impact.
- Federal agencies may not base any decisions regarding individuals in federally conducted education or training programs on race-based stereotypes or assumptions regarding interests, competency levels, or expectations of success.
- Federal agencies must take steps to ensure that no federally conducted education or training program takes place in an environment that is intimidating, abusive, offensive, or hostile on the basis of race.

Examples[5] of Prohibited Conduct:

- A federal law enforcement agency conducts an anti-terrorist training program in which it groups participants in various teams. Although the instructor generally makes random assignments for this exercise, he states that he has decided to assign all of the African-American participants to a single team because he believes that African-Americans work most effectively with members of their own race. The instructor's conduct violates the Executive Order.
- The Department of Justice offers an advanced prosecutorial course for its

[4] Of course, it is also true that not every principle will be applicable to every protected basis. For example, only certain protected characteristics trigger a reasonable accommodation requirement. Individuals or agencies with specific questions regarding the Executive Order's antidiscrimination provisions should contract the Department of Justice's civil Rights Division.

[5] All of the examples of discriminatory conduct set forth in this Guidance Document are hypothetical and are not intended to suggest that any federal agency actually engages in such discriminatory practices or necessarily even operates such an educational program.

attorneys at the Department's National Advocacy Center in Columbia, South Carolina. Due to the high demand for this course, the limited number of openings available, and the difficulty the Department has had in determining which candidates should be selected, the Department decides to require candidates to take an aptitude test and to select candidates in descending rank order of their test scores. However, the test results in disparate impact upon members of a particular race. Further, the Department lacks evidence that the test is valid; namely, that it predicts success in the course or even that it is necessary to pass the test in order to satisfactorily complete the course. Accordingly, the Department's use of this test violates the Executive Order.

VI. Discrimination on the Basis of Sex

Federal agencies must ensure that no individual is discriminated against on the basis of sex in any federally conducted education or training program or activity.

- No executive agency may admit, refuse to admit, promote, refuse to promote, or otherwise favor or disfavor, a participant or prospective participant in a federally conducted education program on the basis of sex.

- An agency may not impose, explicitly or implicitly, stricter admission or completion requirements for one sex as compared to the other.

- Federal agencies operating education or training programs may not utilize policies, procedures, or methods of administration which, although facially neutral, have a disproportionate and adverse effect on participants or applicants on the basis of sex unless there is an educational or business necessity for the use of such policies and there are no equally effective alternative practices that would result in less of an impact on the basis of sex.

- Federal agencies should ensure that no individual is subjected to gender-based harassment, which may include harassment based on sex or sex-stereotyping, in any federally conducted education or training program. Gender-based harassment may be based upon stereotypical notions regarding how persons of each gender should act or look.

- Discrimination on the basis of sex includes discrimination on the basis of pregnancy. Federal agencies must ensure that no woman is discriminated against on the basis of pregnancy, childbirth, false pregnancy, termination of pregnancy, or recovery therefrom, in any education or training program or activity.

Examples of prohibited conduct:

- The Director of Athletics at a Department of Defense School for dependent children of military personnel decides to allocate all of his annual athletics budget to male sports because he does not believe that female students need or want the same quality and variety of athletic services as males. Despite repeated requests from female students for a variety of programs and services, the Director refuses to consider the provision of any funding for co-ed or female sports. The Director's conduct would violate the Executive Order.[6]

- The Federal Bureau of Investigation conducts a firearms training program for state and local officials. The admissions director refuses to admit women because he believes that only men should be permitted to train for dangerous jobs. The director's refusal to consider women for participation in the program would violate the Executive Order.

- The Department of Health and Human Services conducts a nurses' training program on childhood vaccinations. One of the instructors requires the male participants to attend a seminar on infant care, but does not require the female students to attend the same seminar because she assumes that female students already possess such skills. The instructor's conduct would violate the Executive Order.

- A physical fitness instructor at the Federal Bureau of Prisons refuses to allow a pregnant inmate to participate in the physical fitness training program because he believes that pregnant women should not be physically active. Although the prison has a policy of permitting inmates with temporary disabilities to participate in physical fitness programs upon receipt of approval from a physician, the instructor refuses to consider a letter from the inmate's doctor explaining that physical activities pose no health risk to her. The instructor's decision to exclude the woman would violate the Executive Order.

- The Department of Labor conducts a week-long training seminar during which participants are evaluated for their approaches to management. Future promotion decisions are based on these evaluations. One of the evaluators gives high ratings to men who exhibit an aggressive interpersonal style, but deducts points for women who exhibit the same characteristics. The evaluator's judgments are based on sex-stereotypes and thus violate the Executive Order.

- The Department of Justice operates an advanced law enforcement training course on an annual basis for ten individuals. During one session of the course, nine of the ten participants are male. The only woman enrolled in the course is continually taunted and hazed by her male peers who do not believe that women are capable of serving as law enforcement officers. The male instructor not only fails to take appropriate corrective action, but joins the male students in subjecting the woman to a barrage of derogatory epithets. The gender-based harassment to which the woman is subjected violates the Executive Order.

Sexual Harassment

The Executive Order's prohibition on sex discrimination requires federal agencies to ensure that no individual is subjected to sexual harassment in any federally conducted education or training program.

- Sexual harassment entails unwanted or unwelcome sexual conduct including sexual advances, requests for sexual favors, or other verbal, nonverbal, or physical conduct of a sexual nature.

- Federal agencies must ensure that no individual involved in a federally conducted education or training program is subjected to any form of sexual harassment.

- No instructor, supervisor, administrator, or other official involved in a federally conducted education program may (1) Explicitly or implicitly make submission to sexual conduct a term or condition of an individual's participation in an education program, or (2) use submission to or rejection of such conduct as the basis for any decision affecting an individual. Sexual harassment of this type violates the Executive Order whether an individual resists and suffers the threatened harm or submits and thus avoids the threatened harm.

- Federal agencies must ensure that no individual involved in a federally conducted education or training program is subjected to a hostile environment on the basis of sex. An impermissible hostile environment may consist of unwelcome sexual conduct that is sufficiently severe, persistent, or pervasive so as to (1) Limit an individual's ability to participate in, or benefit from, an education or training program or activity, or (2) create a hostile or abusive educational environment. Hostile environments may be created by supervisors, instructors, administrators, other officials, or peers.

[6] Further information on the application of these nondiscrimination principles to athletic programs in educational institutions may be obtained by consulting Guidance Documents developed by the Department of Education's Office for Civil Rights, including *Policy Interpretation—Title IX and Intercollegiate Athletics,* 45 CFR part 26 (1979); *Equal Opportunity in Intercollegiate Athletics: Requirements under Title IX of the Education Amendments of 1972,* 34 CFR part 106; *Clarification of Intercollegiate Athletics Policy Guidance: The Three-Part Test* (January 16, 1996); and various other pamphlets, memoranda, and documents that may be found on the Department of Education's website at www.ed.gov./offices/OCR/ocrprod.html.

Examples of prohibited conduct:

• A male student attending a high school operated by the Bureau of Indian Affairs is told by a female teacher that he will fail algebra if he does not accompany her on a date. The student refuses the teacher's request and receives a failing grade as a result. The teacher's conduct violates the Executive Order.

• The Federal Emergency Management Agency conducts emergency preparedness training for local firefighters. A training supervisor refuses to certify that a trainee has completed the program until she accompanies him on a date. Fearing that she will lose her job if she is not certified, the trainee acquiesces to the supervisor's demand. The supervisor's behavior constitutes sexual harassment and violates the Executive Order.

• A volunteer student intern at the Department of Veterans Affairs has made repeated unwelcome sexual gestures of a graphic and physical nature toward a fellow intern. On several occasions, the intern has made such gestures while following the victim and threatening to ''get her alone.'' The victim no longer feels that she can be by herself at the office. This conduct has been both severe and pervasive and has created a hostile educational environment. The intern tells her supervisor and the Senior Managers who oversee the program, but they refuse to investigate or otherwise stop or prevent the conduct. The failure to investigate and/or take appropriate corrective action violates the Executive Order.

VII. Discrimination on the Basis of Color

Federal agencies must ensure that no individual is discriminated against on the basis of color in any education or training program or activity.

• Discrimination on the basis of color may include, but is not limited to, discrimination on the basis of the appearance of an individual's skin tone, racial complexion, pigmentation, or hue.

• A federal agency may not, on the basis of color, admit, refuse to admit, promote, refuse to promote, or otherwise favor or disfavor, a participant or prospective participant in an education or training program or activity.

• A federal agency may not use color as a proxy for determining an individual's race or national origin.

• Federal agencies must ensure that participants in education or training programs or activities are not subjected to harassment, in the form of color-based animus, bias, hostility, stereotype, ridicule or insult, whether by instructors or fellow participants, that is sufficiently severe, persistent, or pervasive to create a hostile environment.

• Federal agencies may not utilize policies, procedures, criteria or methods of administration which, although facially neutral, have a disproportionate and adverse impact on the basis of color, unless there is an educational or business necessity for the use of such policies and there are no equally effective alternative practices that would result in less of an impact on the basis of color.

Examples of prohibited conduct:

• An executive agency conducts a vocational training program that includes an advanced course in media and broadcast education. The only criteria for admission is that the individual demonstrate a long-term interest in the field. After conducting interviews, however, a member of the admissions committee rejects an applicant with dark skin solely because she has seen statistical data that demonstrates that individuals with dark skin experience greater difficulty in finding permanent employment in these fields. The admissions committee member's conduct violates the Executive Order.

• A federal agency is planning an education seminar to address the Native American experience during the 20th Century. The program coordinator receives applications from numerous Native Americans who wish to participate as panelists. The program coordinator refuses to select any light-skinned applicants because he believes that such individuals do not appear to be ''Native American'' and thus cannot effectively address this topic. The coordinator's conduct violates the Executive Order.

VIII. Discrimination on the Basis of National Origin

Federal agencies must ensure that no individual is discriminated against on the basis of national origin in any federally conducted education or training program or activity.

• Discrimination on the basis of national origin may include discrimination based upon an individual's country of birth, ancestry, or accent.

• Federal agencies must ensure that individuals are not subjected to disparate treatment on the basis of national origin.

• Federal agencies may not utilize policies, procedures, criteria or methods of administration which, although facially neutral, have a disproportionate and adverse impact on the basis of national origin unless there is an educational or business necessity for the use of such policies and there are no equally effective alternative practices that would result in less of an impact on the basis of national origin.

• Participants in a federally conducted education or training program or activity must not be subjected to a hostile environment based upon national origin.

• Exempt from coverage under this Executive Order are selections based on national origin of foreign nationals to participate in covered education or training programs which primarily concern national security or foreign policy matters.

Examples of Prohibited Conduct:

• The Department of Health and Human Services decides to hold a conference focused on training community groups on Latino health issues. A non-Latino representative from one of these community groups wishes to attend the conference, but the Conference Coordinator denies the request because the individual is not Latino. The Conference Coordinator's conduct would violate the Executive Order.

• An agency plans to hold a training session in a large city. The conference is designed to help low-income and minority individuals across the city start their own small businesses. The agency decides to advertise the training session by posting announcements in all low-income areas of the city. An agency coordinator, however, decides not to post announcements in the Chinatown section, even though the area has a high population of low income and minority individuals, because the coordinator does not think people from that area will be interested and/or will understand the English-language training. The coordinator's decision would violate the Executive Order.

• A federal agency is conducting an educational program regarding citizenship and civic duty. An employee applies to be a member of the speakers' panel during the program, but her supervisor refuses to select her because he believes that she has a foreign accent which would undermine her credibility with the audience. The supervisor's conduct violates the Executive Order.

Limited English Proficiency

Under certain circumstances, a federal agency's failure to provide language assistance to an individual whose primary language is not English and who has a limited ability to read, write, speak, or understand English may constitute national origin discrimination. Agency obligations with respect to such individuals who are limited English proficient (LEP) are discussed below.[7]

• Agencies have an obligation to take reasonable steps to ensure that LEP

[7] Further guidance on these principles and agency obligations with respect to LEP issues may be found by consulting Executive Order 13166, ''Improving Access to Services for Persons with Limited English Proficiency,'' 65 FR 50121 (August 16, 2000), and the Department of Justice's Policy Document, ''Enforcement of Title VI of the Civil Rights Act of 1964—National Origin Discrimination Against Persons with Limited English Proficiency.'' 65 FR 50123 (August 16, 2000).

individuals have meaningful access to federally conducted education and training programs and activities.

• Agencies must determine what constitutes ''reasonable steps'' by considering a number of factors including: (1) the number or proportion of LEP persons in the eligible population to be served by the education or training program or activity; (2) the frequency with which LEP individuals come into contact with the program or activity; (3) the importance of the service provided by the program or activity; and (4) the resources available to the agency.

• If the federally conducted education program is an elementary or secondary school (*e.g.*, Department of Defense Dependent Schools or schools operated by the Department of Interior, Bureau of Indian Affairs), the executive department or agency should comply with the Department of Education's guidance on the provision of language services to elementary and secondary education LEP students.[8]

Examples of Prohibited Conduct:

• A prison operated by the Bureau of Prisons has a very large proportion of adult LEP inmates who speak the same native language. The prison has a drug and alcohol rehabilitation program for inmates who have drug or alcohol addictions. Due to the size of this single-language speaking LEP population, the fact that this population of inmates has the same percentage of drug and alcohol addictions as the rest of the inmate population, and the importance of the program, the prison's failure to provide this group of LEP inmates with access to the program (such as a separate class in their native language or a competent interpreter) would violate the Executive Order.

• Military parents have adopted a child who is limited English proficient. They decide to enroll her in the federally conducted K–12 school for children of military personnel. The school's refusal to consider providing the LEP child with any services to overcome language barriers would constitute a violation of the Executive Order.

IX. Discrimination on the Basis of Disability

Federal agencies must ensure that no individual is discriminated against on the basis of disability in any federally conducted education or training program or activity.

• Section 504 of the Rehabilitation Act already prohibits discrimination on the basis of disability in all federally conducted education and training programs as Section 504 applies to all federally conducted activities. Accordingly, executive departments and agencies may comply with the Executive Order by ensuring that all of their education and training programs are operated in accordance with their Section 504 regulations governing federally conducted activities.

• An individual with a disability refers to any person who has a physical or mental impairment that substantially limits one or more major life activities, has a record of such an impairment, or is regarded as having such an impairment. Major life activities include walking, seeing, hearing, speaking, breathing, learning, performing manual tasks, caring for oneself, working, sitting, standing, lifting, and reading.

• Federal agencies must ensure that no otherwise qualified individual, on the basis of disability, is excluded from participation in, denied the benefits of, or subjected to discrimination in any federally conducted education or training program or activity.

• A qualified individual with a disability is any person who, with or without reasonable accommodation, can meet the essential eligibility requirements for involvement in the education or training program.

• Agencies must ensure that federally conducted education or training programs are readily accessible to qualified individuals with disabilities. In order to ensure accessibility, an agency may:

(i) Relocate the education or training program or activity to an accessible facility;

(ii) Provide the aid, benefit, or service in another manner; or

(iii) Make modifications to the building or facility itself.

• In determining how to achieve accessibility, agencies should attempt to provide aid, benefits, or services in the most integrated setting possible.

Examples of prohibited conduct:

• The National Endowment for the Arts conducts an education program on art history. The instructor has a limited number of tickets to a new movie regarding French impressionist works and decides to draw names randomly to decide which students can attend. When the instructor draws the name of a visually impaired participant, he reassigns the ticket because he believes that the visually impaired individual would not be able to enjoy the movie as much as a non-visually impaired participant. The instructor's conduct would violate the Executive Order.

• The Office of Government Ethics holds an ethics briefing for another agency's ethics officials in a building that has three stairs leading up the main entrance. There is no ramp, lift, or alternative accessible entrance. Several participants use wheelchairs and, thus, cannot get into the building. The instructor tells the participants that they will not be able to attend and refuses to relocate the briefing to an available and accessible facility, despite the fact that to do so would not constitute an undue burden. The instructor's refusal to relocate the briefing would violate the Executive Order.

Reasonable Accommodation

Agencies have an obligation to provide reasonable accommodation to the known physical or mental limitations of an otherwise qualified individual with a disability, unless the agency can demonstrate that the accommodation would impose an undue hardship.

• Agencies must furnish appropriate auxiliary aids and services when necessary to afford a qualified individual with a disability an equal opportunity to participate in a federally conducted education or training program or activity.

• Agencies must afford an individual with a disability an opportunity to request the auxiliary aid or service of his or her choice, and should honor that choice unless another effective aid or service is available.

• An agency may not charge an individual with a disability for the use of an auxiliary aid or service.

• The obligation to provide reasonable accommodations extends only to individuals with disabilities; an agency's failure to provide similar accommodations for individuals without disabilities does not constitute unlawful discrimination.

Examples of prohibited conduct:

• The Department of Justice conducts training seminars on compliance with civil rights laws for employees from other agencies. A prospective participant who is hearing impaired requests a sign language interpreter for an upcoming seminar. Although the agency employs a full-time sign language interpreter who is available to attend the seminar in question, the training coordinator refuses to enlist the interpreter's services and informs the participant that the agency will provide a video with closed-captioning that will be available ten days after the seminar is over. The coordinator's conduct would violate the Executive Order.

• A visually impaired student attending a high school operated by the Bureau of Indian Affairs requests that his class handouts be provided in Braille or on audio cassette. The principal refuses to translate any materials and urges that the student transfer to a private high school where such materials are more readily available. The principal's conduct would violate the Executive Order.

[8] *See*, for example, *Identification of Discrimination and Denial of Services on the Basis of National Origin* (May 1970), 35 FR 11595; ''The Office for Civil Rights Title VI Language Minority Compliance Procedures'' (Dec. 3, 1985); and *Policy Updates on Schools' Obligations Toward National Origin Minority Students with Limited-English Proficiency (LEP)* (Sept. 27, 1991).

X. Discrimination on the Basis of Religion

Federal agencies must ensure that no individual is discriminated against on the basis of religion in any education or training program or activity.

• Discrimination on the basis of religion may include discrimination on the basis of an individual's religion (or lack thereof), religious beliefs, religious expression, or religious practices. Religious practices may include moral or ethical beliefs as to what is right and wrong which are sincerely held with the strength of traditional religious views.[9]

• Discrimination on the basis of religion also may include discrimination on the basis of an individual's relationship with a person of a particular religion or an individual's affiliation with a group, including an employee or student organization, that is associated with religious issues or whose membership is composed largely of people of a particular religion.

• No executive agency may admit, refuse to admit, promote, refuse to promote, or otherwise favor or disfavor, a participant or prospective participant in a federally conducted education program because of his or her religion (or lack thereof), religious beliefs, religious expression, or religious practices.

• An agency may not impose, explicitly or implicitly, stricter admission or completion requirements for a particular religious group or an individual who espouses particular religious beliefs.

• Individuals involved in a federally conducted education program may not be subjected to a hostile environment in the form of religiously-based discriminatory intimidation, or pervasive or severe religious abuse, ridicule or insult, whether by instructors or fellow participants. A hostile environment is not created, however, simply by virtue of religious expression with which some participants might disagree.

Examples of prohibited conduct:

• An instructor in a Department of Justice computer training course requires a participant who is an atheist to complete five extra hours of training because that participant does not share the instructor's religious beliefs. The instructor's conduct would violate the Executive Order.

• A group of participants, attending a federally conducted training course, share a common faith. This group engages in a pattern of verbal attacks on other participants who do not share their religious views. These attacks occur repeatedly and are both severe and pervasive, creating a hostile educational environment. The agency is aware of this situation but fails to take effective corrective action. The agency's failure to take effective corrective action would violate the Executive Order.

Reasonable Accommodation of Religious Practices

The Executive Order's prohibition on religious discrimination also includes an obligation on the part of federal agencies to provide reasonable accommodation for religious practices. If an individual notifies an executive department or agency of his or her need for a religious accommodation with respect to a federally conducted education program, the agency has an obligation to reasonably accommodate the individual's religious observances or practices.

• Reasonable accommodations for religious observances or practices are those that do not impose an undue hardship. Though an agency need not make an accommodation that will result in more than a *de minimis* burden to the agency, the cost or other hardship nevertheless must be real rather than speculative or hypothetical. An accommodation should be made unless: (1) It would create an actual cost for the agency or other participants, (2) it would cause an actual disruption in the conduct of the education program, or (3) such accommodation is otherwise barred by law.

• Individuals involved in federally conducted education programs must be permitted to wear religious clothing, jewelry, or other accessories, if wearing such attire is part of an individual's religious practice or expression, so long as the wearing of such attire does not unduly interfere with the conduct of the education program.

• Agencies should be flexible in the scheduling of education and training courses when participants request scheduling changes in order to observe religious traditions, such as the Sabbath or particular holidays, unless to do so would result in more than a *de minimis* burden.

• Agencies should attempt to honor requests for alternative work assignments when completion of a particular work assignment would contravene an individual's religious practices or beliefs.

Examples of prohibited conduct:

• The National Aeronautics and Space Administration conducts a space camp program every Saturday and Sunday morning, and participants are randomly assigned to each session. The agency refuses to even consider a Catholic youth group's request to be placed in the Saturday morning program so that the group can participate without missing Mass. The agency's failure to even consider providing this religious accommodation would violate the Executive Order.

• The Department of Interior requires its national park service employees to wear uniforms during public instruction, and imposes sanctions for deviation from specific guidelines. A Muslim employee wishes to wear a head scarf or hijab during instruction, but her supervisor refuses to consider her request. The supervisor's refusal to consider the employee's request would violate the Executive Order.

XI. Discrimination on the Basis of Age

Federal agencies must ensure that no individual is discriminated against on the basis of age in any federally conducted education or training program or activity.

As a general matter, age may not be used as a basis upon which to condition the allocation of benefits within, or qualification for, or participation in, a federally conducted education or training program or activity. More specifically:

• Age distinctions may not be used to exclude individuals from a program or activity unless age is a bona fide qualification for participation in the program or activity, that is necessary to the achievement of a programmatic objective or necessary to the normal operation of the program or activity.

• Although agencies may, under certain circumstances, rely on age-based distinctions because it is impracticable to measure characteristics that are necessary to the achievement of an essential programmatic objective on an individualized basis, age may *not* be used as a proxy if it is not a substantially accurate measure of those characteristics.

• Age-based classifications may not be used to achieve any objective that is not essential to the achievement of a statutory objective or the normal operation of a program or activity.

Under certain circumstances, however, agencies may legitimately use age distinctions with respect to the operation of federally conducted education or training programs. For example:

• Agencies may use age-based admissions policies for education or training programs that have traditionally been age-specific.

• Agencies may use age-based admissions policies for education or training programs that must be age-limited for reasons related to health or national security.

• Agencies may rely on age when acting in accordance with laws designed

[9] *See* Equal Employment Opportunity Commission ''Guidelines On Discrimination Because Of Religion,'' 29 CFR 1605.1.

to provide special benefits or assistance to members of a particular age group, such as children or the elderly.

Examples of Prohibited Conduct:

• An executive agency conducts an education program through which it provides computer science training for high school graduates. The agency permits only individuals under the age of 30 to apply for, and participate in, the program. The agency's policy is based upon the belief that age can be used as an acceptable proxy for measuring an individual's likely long-term commitment to a career in computer science. The agency's policy would violate the Executive Order because age is not an accurate or acceptable measure of an individual's likely commitment to a long-term career in computer science.

• An executive agency operates a business development training program to train entrepreneurs starting new and novel businesses. The training program is only available to individuals under the age of 50. The agency claims that it uses this age requirement to measure characteristics, such as entrepreneurial ingenuity, that are essential to an individual's ability to start a novel business. The agency's conduct violates the Executive Order because age is not an accurate measure of entrepreneurial ingenuity—a characteristic which may be necessary to the achievement of an essential programmatic objective, but which is properly assessed on an individualized basis, such as by reviewing applicant business plans.

XII. Discrimination on the Basis of Sexual Orientation

Federal agencies must ensure that no individual is subjected to discrimination on the basis of his or her sexual orientation in any federally conducted education or training program or activity.

• ''Sexual orientation'' refers to heterosexuality, homosexuality, or bisexuality.

• Discrimination on the basis of sexual orientation includes discrimination on the basis of an individual's:

(i) Sexual orientation or perceived sexual orientation;

(ii) Relationship with an individual of a particular sexual orientation;

(iii) Affiliation with a group, including an employee or student organization, that is associated with sexual orientation issues or whose membership is composed largely of people of a particular sexual orientation.

• Federal agencies must ensure that all individuals involved in federally conducted education or training programs are treated without regard to sexual orientation.

• Federal agencies must ensure that no individual involved in a federally conducted education program is subjected to harassment based on his or her sexual orientation. Sexual orientation harassment may include slurs, epithets, unwelcome sexual advances, jokes, cartoons, or other derogatory behaviors that target individuals on the basis of sexual orientation and that are sufficiently severe, persistent, or pervasive to create a hostile educational environment.

Examples of Prohibited Conduct:

• A teacher in a Bureau of Indian Affairs federally conducted school is discharged on the basis of her sexual orientation. The discharge would violate the Executive Order.

• A student in a federally conducted school is harassed by his fellow students as a result of his perceived sexual orientation. The harassment causes him severe emotional distress and, as a result, his grades drop and he is often absent from school. The harassment creates a hostile educational environment, and the student notifies his teachers and the school principal. The failure of his teachers and the principal to investigate his claims and/or take appropriate corrective action would violate the Executive Order.

• A guidance counselor at a Department of Defense high school for the dependent children of military personnel refuses to permit a homosexual student to attend a training session on developing a career in business. The guidance counselor advises the student to consider a career as an interior decorator or a chef because she believes these professions are among the most suitable for gay men. The guidance counselor's conduct would violate the Executive Order.

• The internship coordinator at a federal agency refuses to select a heterosexual student as a summer intern because the student is being raised by two homosexual men. The coordinator's decision would violate the Executive Order.

• A federal agency holds an annual training retreat and invites the spouses or significant others of participating employees to accompany the group. However, when a homosexual employee arrives at the retreat with his partner, the retreat coordinator refuses to allow his partner to attend. The retreat coordinator's conduct violates the Executive Order.

XIII. Discrimination on the Basis of Status as a Parent

Federal agencies must ensure that no individual is discriminated against on the basis of his or her status as a parent in any federally conducted education or training program or activity.

• ''Status as a Parent'' refers to the status of any individual who, with respect to an individual who is under the age of 18 or who is 18 or older but is incapable of self-care because of a physical or mental disability, is:

(i) A biological parent;

(ii) An adoptive parent;

(iii) A foster parent;

(iv) A stepparent;

(v) A custodian of a legal ward;

(vi) In loco parentis over such an individual; or

(vii) Actively seeking legal custody or adoption of such an individual.

• The prohibition on discrimination based on status as a parent is designed to protect both men and women who become fathers and mothers through childbirth, foster parentage, adoption, legal guardianship, or marriage.

• Federal agencies may not rely on an individual's status as a parent in determining whether a person satisfies any policy or criterion for selection or admission to a federally conducted education program.

• Federal agencies may not rely on an individual's status as a parent in recruiting and/or selecting participants and instructors for federally conducted education programs.

• An individual may not be excluded from, denied the benefits of, or subjected to discrimination in any federally conducted education program as result of his or her perceived parental responsibilities.

Examples of prohibited conduct:

• The Admissions Committee for a summer training program operated by the Department of Health and Human Services refuses to admit mothers of young children because the committee members believe mothers should stay home and take care of their children. The Admissions Committee's conduct violates the Executive Order.

• The head of the French Department at the Department of Agriculture's Graduate Language Program twice passed over a single father with custody of two young children for promotion to a Senior Instructor position because she believed that the father would not be interested in a position with evening and weekend obligations due to his parental responsibilities. The failure to consider the father for promotion based upon his status as a parent violates the Executive Order.

• The Nuclear Regulatory Commission does not recruit graduate students with children for their Graduate Fellowship Program because the agency believes that the Graduate Fellowship Program is too rigorous for students with parental responsibilities. This recruitment practice constitutes discrimination on the basis of status as a parent and violates the Executive Order.

• An instructor for the VA Home Loan Training Program at the Department of Veterans Affairs is told by his supervisor that, if he proceeds to become a foster parent, he will not be eligible for a promotion to Senior Instructor because the new position will require too much travel. The instructor becomes a foster parent and is passed over for promotion as a result. The failure to consider the instructor for promotion based on his status as a foster parent violates the Executive Order.

• The Department of Justice is conducting a day-long training seminar for its employees and is planning to offer the course on three consecutive dates. Employees are assigned to

dates alphabetically on the basis of their last names. One of the employees requests to take the training course on a different date as she is scheduled to attend a parent-teacher conference at her child's school. Although the training coordinator has honored other employee requests to switch dates, he refuses to grant the mother's request because he believes that she should prioritize work over her parental responsibilities. The training coordinator's conduct violates the Executive Order.

XIV. Administrative Enforcement

Section 4 provides for administrative enforcement of the antidiscrimination provisions of Executive Order 13160. General guidelines for administrative enforcement are discussed below. Before turning to these guidelines, however, it is important to address three preliminary matters.

First, Executive Order 13160 covers all individuals involved in federally conducted education and training programs. Although many such individuals are likely to be members of the general public, rather than federal employees, there will, of course, be many federal employees covered by the Executive Order by virtue of their employment-related participation in federally conducted educational programs. Such individuals, however, are already protected under a number of existing Equal Employment Opportunity (EEO) laws, regulations, and Executive Orders, including Title VII of the Civil Rights Act of 1964 (Title VII) (race, color, religion, sex, and national origin), sections 501 and 504 of the Rehabilitation Act (Sections 501 and 504) (disability), the Age Discrimination in Employment Act (ADEA) (age), the Equal Employment Opportunity Commission's Federal Sector Equal Employment Opportunity Regulations, 29 CFR 1614, and Executive Order 11478, as amended, (race, color, religion, sex, national origin, disability, age, sexual orientation, and status as a parent). Therefore, in order to promote the consistent and effective enforcement of equal employment opportunity mandates for all federal employees, and to preserve the integrity of statutorily protected equal employment opportunity rights, complaints filed under both this Executive Order and existing equal employment opportunity laws should be consolidated and adjudicated under the relevant equal employment opportunity statutes (*i.e.,* Title VII, sections 501/504, and/or the ADEA).[10] This approach will not only provide a streamlined procedure for resolving complaints, but will also protect an aggrieved employee's opportunity to recover any monetary damages that are available under the EEO statutes but not under this Executive Order.

As a practical matter, this means that a federal employee seeking to file a complaint under this Executive Order must indicate whether the complaint is related to his or her employment[11] and, if so, whether he or she has filed any other EEO claims arising out of the same circumstances. If so, the complaint filed under this Executive Order should be transferred to the office handling the related claim and the enforcement procedures set forth below will be deemed inapplicable. If a federal employee chooses to proceed solely under this Executive Order, the enforcement procedures set forth below will govern the disposition of his or her complaint.[12]

If a federal employee indicates that he or she has not filed any other EEO claims at the time of filing a complaint under this Executive Order, the employee may nevertheless subsequently elect to file a related claim under Title VII, section 504, the ADEA, or Executive Order 11478, provided the employee follows the appropriate EEO filing procedures and contacts an EEO counselor and files a complaint within the relevant statutory time limit. In such cases, the employee should notify the investigating office that he or she has decided to contact an EEO counselor and file a related EEO claim so that the Executive Order 13160 complaint may be transferred to the appropriate office as provided for above. Federal agencies must ensure that all federal employees filing Executive Order 13160 complaints have adequate notice that they should advise the investigating office handling the Executive Order 13160 complaint if they decide to pursue their claims through the EEO process.

Second, the enforcement procedures set forth below are designed solely to provide general guidance. Under Section 5–502 of the Executive Order, all executive departments and agencies must establish procedures to receive and review complaints within 90 days of January 18, 2001. As all executive departments and agencies already have procedures in place for adjudicating claims regarding federally conducted programs under Section 504 of the Rehabilitation Act, it is recommended that agencies consider utilizing the same investigative and adjudicative offices for handling complaints under Executive Order 13160. However, agencies are of course free to develop different procedures and to supplement or modify the following enforcement procedures as appropriate.

Third, after developing individual procedures to receive and review complaints, each executive department and agency should prepare some sort of outreach materials to ensure that all individuals involved in federally conducted education and training programs are aware of Executive Order 13160 and are advised as to the proper procedures for filing complaints. These outreach materials should provide individuals with specific information, including, but not limited to, the general antidiscrimination mandates of Executive Order 13160, details regarding how to obtain copies of this Guidance Document, timelines for filing complaints, the name(s) and address(es) of the office(s) to which such complaints should be sent, and specific procedures established by the relevant federal agency regarding the processing of complaints.

All executive departments and agencies should further ensure that these outreach materials provide clear instructions to federal employees regarding their respective rights under Executive Order 13160 and Title VII, sections 501/504, the ADEA, and Executive Order 11478. Specifically, these outreach materials should clearly state the differing timelines for filing claims under the Executive Order and

[10] In cases where a complaint raises claims under both Executive Order 13160 and Executive Order 11478 (but does not raise statutory claims), the appropriate complaint processing procedures will depend upon whether the federal agency conducting the education program has an existing complaint process for handling claims filed under Executive Order 11478. If a federal agency has complaint procedures for claims filed under Executive Order 11478, claims filed under both Executive Order 13160 and Executive Order 11478 may be consolidated and adjudicated under Executive Order 11478. If a federal agency does not have a complaint procedure for claims arising under Executive Order 11478, and a complaint alleges a violation of Executive Order 13160 and Executive Order 11478 (but does not raise any statutory claims), the complaint should be processed in accordance with the procedures for Executive Order 13160 set forth below. If a complainant raises claims under Executive Order 13160, Executive Order 11478, and an EEO statute, the complaint should be consolidated and adjudicated under the relevant EEO processes.

[11] Federal employees participating as members of the general public in a federally conducted education program will, of course, be subject to the same enforcement procedures as outside participants.

[12] For instance, the enforcement procedures set forth in this Guidance Document may govern the resolution of a complaint filed by an employee involved in a training program conducted by a federal agency other than the federal agency for whom the employee works. For example, if an employee of the Department of Justice participates in a training course conducted by the Department of Education, the employee may choose to file an Executive Order 13160 claim directly against the Department of Education if he or she chooses not to, or is not able to, invoke existing EEO laws and regulations at the Department of Justice.

these three statutes, as well as the availability (or unavailability) of different remedies. As discussed above, federal employees should also be clearly advised that claims filed under both the Executive Order and an equal employment opportunity statute will be adjudicated only under the relevant statute (or under Executive Order 11478, if an agency has existing procedures for receiving such complaints).

The development of these outreach materials should ensure that all individuals receive adequate notice of their rights under Executive Order 13160. These materials will also serve to ensure that individuals participating in federally conducted education and training programs are properly advised as to the appropriate procedures for filing complaints. Finally, these materials should assist in clarifying questions federal employees may have regarding the ramifications of filing a complaint under Executive Order 13160 versus filing a complaint under Title VII, sections 501/504, the ADEA, or Executive Order 11478.

A. Definitions

For purposes of this Guidance Document, the term—

Appropriate agency official means the officer or officers within an executive department or agency designated to determine what, if any, disciplinary action, remedial action, or corrective action should be taken as a result of a violation of the Executive Order.

Complete complaint means a written statement that contains the complainant's name, address, and phone number, describes the agency's alleged discriminatory action in sufficient detail to inform the agency of the nature and approximate date of the alleged violation, and identifies whether the complainant is an employee of the agency alleged to have committed the discrimination and whether the complainant's involvement in the relevant education or training program was related to his or her employment. A complete complaint must be signed by the complainant or by someone authorized by the complainant to sign on his or her behalf.

Investigating office means the office or offices within an executive department or agency that are designated to investigate complaints regarding violations of this Order or its implementing rules, regulations, policies, or guidance.

Respondent means the organizational unit in which the alleged discrimination occurred.

B. Filing a Complaint

Any individual who believes himself or herself to be aggrieved by a violation of Executive Order 13160 or its implementing regulations, rules, policies or guidance, including this Guidance Document, may, personally or through a representative, file a written complaint with the agency that he or she believes is in violation of this Order or any of its implementing regulations, rules, policies, or guidance. All written complaints should be filed with the appropriate Investigating Office as designated by the relevant agency.

1. Complete Complaints

In order to be accepted by an agency's Investigating Office, all written complaints must be ''complete complaints.'' As defined above, a complete complaint must include the name, address, and phone number of the complainant, must identify whether the complainant is a federal employee and whether the complainant's involvement in the relevant education program was related to his or her employment, and must describe the alleged discriminatory conduct in sufficient detail to inform the agency as to the nature and approximate date of the alleged violation. A complete complaint also must be signed by the complainant or by someone authorized by the complainant to sign on his or her behalf.

2. Time Limits for Filing Complaints

As a general matter, all complaints must be filed within 180 days of the alleged discrimination. However, the appropriate Investigating Office may extend this time limit:

(a) If the complainant can demonstrate that he or she had no notice of the time limit and was not otherwise aware of it; or

(b) If the complainant can demonstrate that he or she was prevented by circumstances beyond his or her control from submitting the complaint in a timely fashion; or

(c) For other reasons, or under other circumstances, considered sufficient by the agency.

For purposes of determining when a complaint is timely filed, a complaint mailed to the agency will be deemed filed on the date that it is postmarked. Any other complaint will be deemed filed on the date that it is received by the appropriate Investigative Office, by any agency supervisor, or by any other agency employee designated by the agency to receive such complaints.

If a complaint is filed within 180 days of the alleged discrimination, but the agency subsequently determines that the complaint is not a ''complete complaint,'' the complainant's claims shall nevertheless be deemed filed in a timely manner, and the complainant shall be given an appropriate opportunity to amend his or her original complaint. *See* Section C below for further information regarding the process for requesting additional information from a complainant in order to supplement an incomplete complaint.

3. Class Complaints

Any individual who believes that any specific class of persons has been subjected to discrimination prohibited by Executive Order 13160 or any of its implementing regulations, rules, policies, or guidance, including this Guidance Document, may file a class complaint with the appropriate Investigative Office, provided that individual is either a member of the allegedly aggrieved class of persons or a representative of a member of the allegedly aggrieved class of persons. Each executive department or agency should develop specific procedures to deal with the resolution of class complaints.

4. Legal Representation

Any individual filing a complaint under Executive Order 13160 or any of its implementing regulations, rules, policies, or guidance may be represented and assisted in all stages of these proceedings by an attorney or representative of his or her own choosing. An individual has a responsibility to promptly inform the agency if legal counsel is retained. In addition, an individual has an obligation to notify the appropriate Investigating Office if he or she wishes to have any other representative included in these proceedings. It is the responsibility of the complainant to provide the appropriate Investigating Office with the name, address, and phone number of any attorney or other representative. In addition, it is an on-going responsibility of the complainant to advise the appropriate Investigating Office as to any changes with respect to the status of his or her legal and/or non-legal representation in any proceeding under this Executive Order or any of its implementing regulations, rules, policies, or guidance. Each federal agency has a duty to ensure that all complainants have adequate notice of these obligations.

C. Initial Review by the Investigating Office

Upon receipt of a complaint filed under this Executive Order, the investigating office must assess the complaint and determine how to proceed. The investigating office should

specifically consider whether the complaint is a complete complaint, whether it was filed in a timely manner, and, in the case of a federal employee, whether the complaint should be consolidated with another complaint and transferred, if necessary.

After reviewing the complaint, the investigating office may need to obtain additional information from the complainant. For example, the investigating office may ask the complainant to supply additional information if the complaint is not complete. Additional information also may be required by the investigating office to determine whether to waive the time limits for filing a complaint or whether to consolidate and transfer a federal employee's claim. If a complainant fails to provide additional information, or otherwise respond to the investigating office's request, within 30 days, without good cause shown, the investigating office may dismiss the complaint.

In certain instances, the investigating office may determine that a complaint should be dismissed because the alleged discriminatory conduct did not occur in a federally conducted education or training program. In such cases, the investigating office should issue a brief written determination setting forth the basis for the dismissal and advising the complainant of his or her right to appeal this decision to the Attorney General for a final determination regarding coverage pursuant to Section 2–203 of the Executive Order. Responsibility for issuing such final determinations regarding coverage is delegated to the Assistant Attorney General for Civil Rights, who shall conduct, handle, or supervise the performance of this function.

D. Informal Resolution or Formal Investigation

Before undertaking a formal investigation, agencies are strongly encouraged to pursue resolution of all complaints filed under this Executive Order through efforts to achieve voluntary compliance. Toward this end, agencies should make use of alternative dispute resolution techniques whenever appropriate.

If an informal resolution of a complaint between a complainant and respondent cannot be reached within a reasonable period of time (generally 45 days), or if efforts to achieve an informal resolution appear to become futile, the investigating office should initiate a formal investigation. However, efforts to achieve voluntary compliance should be undertaken whenever possible and should continue throughout the course of a formal investigation if and when appropriate opportunities arise.

If a decision is made to initiate a formal investigation, the investigating office must notify the complainant in writing. The investigating office should attempt to complete the investigation within 180 days of the agency's receipt of a complete complaint. The investigation should include a thorough review of the circumstances under which the alleged discrimination occurred and any other circumstances which may constitute, or appear to constitute, discrimination against the complainant.

A formal investigation may require the cooperation and participation of other agency employees. Employees who are required by the investigating office to participate in any investigation concerning violations of this Executive Order will do so as part of their official duties and during the course of regular working hours.

Upon completion of a formal investigation, the investigating office must prepare a written report setting forth the results of the investigation. If a determination is made that any agency employee has not complied with the Executive Order or any of its implementing rules, regulations, policies, or guidance, Section 4–402 requires the investigating office to complete a report and refer a copy of the report and any relevant findings or supporting evidence to the appropriate agency official. The investigating office also may make recommendations for any corrective and/or remedial action. A copy of the investigative report should be sent to both the complainant and the respondent, including the employee who is the subject of the report.

If a determination is made that there has been no violation of the Executive Order or any of its implementing rules, regulations, policies, or guidance, a copy of the report also shall be sent to both the complainant and the respondent. In such cases, although no action is required, a copy of the report should nevertheless be sent to the appropriate agency official.

E. Referral to the Appropriate Agency Official

Upon receipt of a report from an investigating office that indicates there has been a violation of the Executive Order or its implementing rules, regulations, policies, or guidance, the appropriate agency official shall review the report and all relevant supporting material in order to determine what, if any, disciplinary action is appropriate. Any action taken to discipline an employee, including removal, must be taken in compliance with otherwise applicable procedures, including the Civil Service Reform Act of 1978, Public Law No. 95–454, 92 Stat. 1111.

The appropriate agency official also shall review the report of the investigating office in order to determine whether any corrective or remedial action should be initiated. Pursuant to Section 4–402(b), however, nothing in the Executive Order authorizes monetary relief to the complainant as a form of remedial or corrective action. If the appropriate agency official does determine that the complainant is entitled to some form of remedial or corrective action, the appropriate agency official shall so notify the complainant in writing. The appropriate agency official also shall take all necessary steps to ensure that the corrective or remedial action ordered is implemented. If a determination is made that the complainant is not entitled to any corrective or remedial action, the appropriate agency official shall notify the complainant of this decision and the reasons for this determination.

Although agencies are free to designate any employee as the appropriate agency official, agencies should bear in mind that section 5–503 provides that the head of each executive department or agency shall be responsible for ensuring compliance with the Executive Order. As such, agencies should consider designating a senior level official for this important post.

XV. Remedies

As discussed above, in addition to making final decisions regarding disciplinary measures, the appropriate agency official shall have the authority to order corrective and/or remedial action, where appropriate. As a general matter, if there has been a violation of the Executive Order, the complainant shall be entitled to all appropriate, non-monetary, equitable relief. The appropriate agency official should attempt to ensure that the aggrieved individual ends up in the same position he or she would have occupied absent discrimination, or a substantially equivalent position. In the context of violations of this Executive Order, specific remedies are likely to include placement in the next available education or training program of a comparable nature; the development of an individualized training opportunity; the cancellation of an unwarranted personnel action or the expungement of adverse materials from agency records; the awarding of a diploma, other certificate, or specific grade; and the

provision of reasonable accommodations.

Federal agencies must ensure that appropriate agency officials are accorded sufficient authority to provide all appropriate forms of relief. Complainants should be aware, though, that Section 8 of the Executive Order specifically provides that the Order ''is not intended, and should not be construed, to create any right or benefit, substantive or procedural, enforceable at law by a party against the United States, its agencies, its officers, or its employees.'' Section 8 further provides, however, that the Order is not intended ''to preclude judicial review of final decisions in accordance with the Administrative Procedures Act, 5 U.S.C. 701, *et seq.*''

XVI. Reporting Requirements

Section 6 of the Executive Order establishes reporting requirements for federal agencies. For the first three years following issuance of this Executive Order, all federal agencies shall file annual reports with the Attorney General that summarize the number, nature, and disposition of complaints filed under the Executive Order. Such reports are to be submitted to the Assistant Attorney General for Civil Rights within 90 days of the end of the preceding year's activities. Subsequent reports are to be submitted every three years and within 90 days of the end of each three year period.

XVII. Conclusion

As discussed above, this Guidance Document is intended to provide executive departments and agencies with a basic framework for ensuring compliance with Executive Order 13160. Pursuant to Section 5–502 of the Executive Order, each agency has 90 days from January 18, 2001 to establish procedures for receiving and addressing complaints. Each agency also shall take ''all necessary steps'' to effectuate any subsequent rules, regulations, policies, or guidance issued by the Attorney General or the Assistant Attorney General for Civil Rights in connection with this Executive Order within 90 days of issuance.

The mandate of Executive Order 13160 is clear: to ensure that all individuals, on the basis of race, sex, color, national origin, disability, religion, age, sexual orientation, and status as a parent, have an equal opportunity to participate in, enjoy the benefits of, and be free from discrimination in, federally conducted education and training programs. Federal agencies should strive to achieve these objectives to the fullest extent possible and are encouraged to use this Guidance Document as a starting point for achieving these important goals.

[FR Doc. 01–1494 Filed 1–17–01; 8:45 am]

BILLING CODE 4410–13–U

Federal Register

Thursday,
January 18, 2001

Part XV

Department of Justice

Guidance Concerning Redistricting and Retrogression Under Section 5 of the Voting Rights Act, 42 U.S.C. 1973c; Notice

DEPARTMENT OF JUSTICE

Office of the Assistant Attorney General, Civil Rights Division; Guidance Concerning Redistricting and Retrogression Under Section 5 of the Voting Rights Act, 42 U.S.C. 1973c

AGENCY: Department of Justice.

ACTION: Notice.

SUMMARY: The Attorney General has delegated responsibility and authority for determinations under Section 5 of the Voting Rights Act to the Assistant Attorney General, Civil Rights Division, who finds that, in view of recent judicial decisions, it is appropriate to issue guidance concerning the review of redistricting plans submitted to the Attorney General for preclearance pursuant to Section 5 of the Voting Rights Act.

FOR FURTHER INFORMATION CONTACT: Joseph D. Rich, Acting Chief, Voting Section, Civil Rights Division, United States Department of Justice, Washington, D.C. 20530, (202) 514–6018.

SUPPLEMENTARY INFORMATION: Section 5 of the Voting Rights Act of 1965, 42 U.S.C. 1973c, requires jurisdictions covered by the Act's special provisions to obtain a determination from either the Attorney General or the United States District Court for the District of Columbia that any change affecting voting, which they seek to enforce, does not have a discriminatory purpose and will not have a discriminatory effect.

Beginning in April 2001, these jurisdictions will begin to seek preclearance of redistricting plans based on the 2000 Census. Based on past experience, the overwhelming majority of the covered jurisdiction will submit their redistricting plan to the Attorney General. As part of the Department's preparation for the upcoming redistricting cycle, Departmental representatives conducted a nation-wide outreach campaign to inform as many of the interested parties as possible of the manner in which it will analyze redistricting plans under section 5. Many of the contacts, both governmental entities and interested private citizens and groups, expressed the view that, in view of recent judicial decisions, it would be helpful for the Department to issue some general guidance in this area. These requests coincided with the Attorney General's view that, by identifying, in general terms, the Department's analytical approach, such guidance would serve a useful law enforcement purpose. This guidance is not legally binding; rather, it is intended only to provide assistance to entities and persons affected by the preclearance requirements of section 5. Approved OMB No. 1190–001 (expires December 31, 2001).

Guidance Concerning Redistricting and Retrogression Under Section 5 of the Voting Rights Act, as Amended, 42 U.S.C. 1973c

Following release of the 2000 Census data, the Department of Justice expects to receive several thousand submissions of redistricting plans pursuant to the preclearance provisions in Section 5 of the Voting Rights Act, 42 U.S.C. 1973c. The Civil Rights Division has received numerous requests for guidance concerning the procedures and standards that will be applied during review of these redistricting plans. Many of the requests relate to the role of the 2000 Census data in the Section 5 review process and to the Supreme Court's decisions in *Shaw* v. *Reno,* 509 U.S. 630 (1993), and later related cases.

The ''Procedures for the Administration of Section 5 of the Voting Rights Act,'' 28 CFR Part 51, provide detailed information about the Section 5 review process. Copies of these Procedures are available upon request and through the Voting Section Web Site (*http://www.usdoj.gov/crt/voting*). This document is meant to provide additional guidance with regard to current issues of interest. Citations to judicial decisions are provided to assist the reader but are not intended to be comprehensive. The following discussion provides supplemental guidance concerning the following topics:

- The scope of Section 5 review;
- The Section 5 ''benchmark'';
- how the benchmark plan is compared with the proposed plan;
- The considerations leading to the decision to interpose a Section 5 retrogression objection;
- racially discriminatory purpose under Section 5; and
- The use of 2000 Census data and other information during Section 5 review.

The Scope of Section 5

The Supreme Court has held that under Section 5, a covered jurisdiction has the burden of establishing that a proposed redistricting plan does not have the purpose or effect of worsening the position of minority voters when compared to that jurisdiction's ''benchmark'' plan. *Reno* v. *Bossier Parish School Board,* 120 S. Ct. 866, 871–72 (2000). If the jurisdiction fails to show the absence of such purpose or effect, then Section 5 preclearance will be denied by the Department of Justice or the District Court for the District of Columbia.

The decision in the *Bossier Parish School Board* case addressed the scope of Section 5 review. Redistricting plans that are not retrogressive in purpose or effect must be precleared, even if they violate other provisions of the Voting Rights Act or the Constitution. The Department of Justice may not deny Section 5 preclearance on the grounds that a redistricting plan violates the one-person one-vote principle, on the grounds that it violates *Shaw* v. *Reno,* or on the grounds that it violates Section 2 of the Voting Rights Act. Therefore, jurisdictions should not regard Section 5 preclearance of a redistricting plan as preventing subsequent legal challenges to that plan by the Department of Justice. In addition, private plaintiffs may initiate litigation, claiming either constitutional or statutory violations.

Benchmark Plans

The last legally enforceable redistricting plan in force for a Section 5 covered jurisdiction is the ''benchmark'' against which a new plan is compared. *See* 28 CFR 51.54(b)(1). Generally, the most recent plan to have received Section 5 preclearance (or have been drawn by a federal court) is the last legally enforceable redistricting plan for Section 5 purposes. When a jurisdiction has received Section 5 preclearance for a new redistricting plan, or a federal court has drawn a new plan and ordered it into effect, that plan replaces the last legally enforceable plan as the Section 5 benchmark. *See McDanie*l v. *Sanchez,* 452 U.S. 130 (1981); *Texas* v. *United States,* 785 F. Supp. 201 (D.D.C. 1992); *Mississippi* v. *Smith,* 541 F. Supp. 1329, 1333 (D.D.C. 1982), appeal dismissed, 461 U.S. 912 (1983).

In *Abrams* v. *Johnson,* 521 U.S. 74 (1997), the Supreme Court held that a redistricting plan found to be unconstitutional under the principles of *Shaw* v. *Reno* and its progeny could not serve as the Section 5 benchmark. Therefore, a redistricting plan drawn to replace a plan found by a federal court to violate *Shaw* v. *Reno* will be compared with the last legally enforceable plan predating the unconstitutional plan. Absent such a finding of unconstitutionality under *Shaw* by a federal court, the last legally enforceable plan will serve as the benchmark for Section 5 review. Therefore, a jurisdiction is not required to address the constitutionality of its benchmark plan when submitting a redistricting plan and the question of whether the benchmark plan is constitutional will not be considered

during the Department's Section 5 review.

Comparison of Plans

When the Department of Justice receives a Section 5 redistricting submission, several basic steps are taken to ensure a complete review. After the ''benchmark'' districting plan is identified, the staff inputs the boundaries of the benchmark and proposed plans into the Civil Rights Division's geographic information system. Then, using the most recent decennial census data, population data are calculated for each of the districts in the benchmark and proposed plans.

Division staff then analyzes the proposed plan to determine whether it will reduce minority voting strength when compared to the benchmark plan, considering all of the relevant, available information. Although comparison of the census population of districts in the benchmark and proposed plans is the important starting point of any retrogression analysis, our review and analysis will be greatly facilitated by inclusion of additional demographic and election data in the submission. *See* 28 CFR 51.28(a). For example, census population data may not reflect significant differences in group voting behavior.[1] Therefore, election history and voting patterns within the jurisdiction, voter registration and turnout information, and other similar information are very important to an assessment of the actual effect of a redistricting plan. This information is used to compare minority voting strength in the benchmark plan as a whole with minority voting strength in the proposed plan as a whole.

The Section 5 Procedures identify a number of factors that are considered in deciding whether or not a redistricting plan has a retrogressive purpose or effect. These factors include whether minority voting strength is reduced by the proposed redistricting; whether minority concentrations are fragmented among different districts; whether minorities are overconcentrated in one or more districts; whether available alternative plans satisfying the jurisdiction's legitimate governmental interests were considered; whether the proposed plan departs from objective redistricting criteria set by the submitting jurisdiction, ignores other relevant factors such as compactness and contiguity, or displays a configuration that inexplicably disregards available natural or artificial boundaries; and, whether the plan is inconsistent with the jurisdiction's stated redistricting standards. *See* 28 CFR 51.59; *see also* 28 CFR 51.56–51.58.

A proposed plan is retrogressive under the Section 5 ''effect'' prong if its net effect would be to reduce minority voters'' ''effective exercise of the electoral franchise'' when compared to the benchmark plan. *See Beer* v. *United States,* 425 U.S. 130, 141 (1976). The effective exercise of the electoral franchise usually is assessed in redistricting submissions in terms of the opportunity for minority voters to elect candidates of their choice. The presence of racially polarized voting is an important factor considered by the Department of Justice in assessing minority voting strength. A proposed redistricting plan ordinarily will occasion an objection by the Department of Justice if the plan reduces minority voting strength relative to the benchmark plan and a fairly-drawn alternative plan could ameliorate or prevent that retrogression.

Alternatives to Retrogressive Plans

If a retrogressive redistricting plan is submitted, the jurisdiction seeking preclearance of such a plan bears the burden of demonstrating that a less-retrogressive plan cannot reasonably be drawn. In analyzing this issue, the Department takes into account constitutional principles as discussed below, the residential segregation and distribution of the minority population within the jurisdiction, demographic changes since the previous redistricting, the physical geography of the jurisdiction, the jurisdiction's historical redistricting practices, political boundaries such as cities and counties, and state redistricting requirements.

In considering whether less-retrogressive alternative plans are available, the Department of Justice looks to plans that were actually considered or drawn by the submitting jurisdiction, as well as alternative plans presented or made known to the submitting jurisdiction by interested citizens or others. In addition, the Department may develop illustrative alternative plans for use in its analysis, taking into consideration the jurisdiction's redistricting principles. If it is determined that a reasonable alternative plan exists that is non-retrogressive or less retrogressive than the submitted plan, the Department will interpose an objection.

Preventing retrogression under Section 5 does not require jurisdictions to violate the one-person one-vote principle. *See* 52 FR 488 (Jan. 6, 1987). Similarly, preventing retrogression under Section 5 does not require jurisdictions to violate *Shaw* v. *Reno* and related cases.

The one-person one-vote issue arises most commonly where substantial demographic changes have occurred in some, but not all, parts of a jurisdiction. Generally, a plan for congressional redistricting that would require a greater overall population deviation than the submitted plan is not considered a reasonable alternative by the Department. For state legislative and local redistricting, a plan that would require overall population deviations greater than 10 percent is not considered a reasonable alternative.

In assessing whether a less retrogressive alternative plan can reasonably be drawn, the geographic compactness of a jurisdiction's minority population will be a factor in the Department's analysis. This analysis will include a review of the submitting jurisdiction's historical redistricting practices and district configurations to determine whether the alternative plan would (a) abandon those practices and (b) require highly unusual features to link together widely separated minority concentrations.

At the same time, compliance with Section 5 of the Voting Rights Act may require the jurisdiction to depart from strict adherence to certain of its redistricting criteria. For example, criteria which require the jurisdiction to make the least change to existing district boundaries, follow county, city, or precinct boundaries, protect incumbents, preserve partisan balance, or in some cases, require a certain level of compactness of district boundaries may need to give way to some degree to avoid retrogression. In evaluating alternative plans, the Department of Justice relies upon plans that make the least departure from a jurisdiction's stated redistricting criteria needed to prevent retrogression.

Prohibited Purpose

In those instances in which a plan is found to have a retrogressive effect, as well as in those cases in which a proposed plan is alleged to have a retrogressive effect but a functional analysis does not yield clear conclusions about the plan's effect, the Department of Justice will closely examine the process by which the plan

[1] For example, within a particular jurisdiction there may be large differences between the rates of turnout among minority populations in different areas. Thus, a redistricting plan may result in a significant, objectionable reduction of effective minority voting strength if it changes district boundaries to substitute poorly-participating minority populations (for example, migrant worker housing or institutional populations) for active minority voters, even though the minority percentages for the benchmark and proposed plans are similar when measured by Census population data.

was adopted to ascertain whether the plan was intended to reduce minority voting strength. This examination may include consideration of whether there is a purpose to retrogress in the future even though there is no retrogression at the time of the submission. If the jurisdiction has not provided sufficient evidence to demonstrate that the plan was not intended to reduce minority voting strength, either now or in the future, the proposed redistricting plan is subject to a Section 5 objection.

The 2000 Census

The most current population data are used to measure both the benchmark plan and the proposed redistricting plan. *See* 28 CFR 51.54(b)(2) (Department of Justice considers ''the conditions existing at the time of the submission.''); *City of Rome* v. *United States,* 446 U.S. 156, 186 (1980) (''most current available population data'' to be used for measuring effect of annexations); *Reno* v. *Bossier Parish School Board,* 120 S. Ct. at 874 (''In § 5 preclearance proceedings * * * the baseline is the status quo that is proposed to be changed: If the change 'abridges the right to vote' relative to the status quo, preclearance is denied * * *'').

For redistricting after the 2000 Census, the Department of Justice will, consistent with past practice, evaluate redistricting submissions using the 2000 Census population data released by the Bureau of the Census for redistricting pursuant to Public Law 94–171, 13 U.S.C. 141(c). Thus, our analysis of the effect of proposed redistricting plans includes a review and assessment of the Public Law 94–171 population data, even if those data are not included in the submission or were not used by the jurisdiction in drawing the plan. The failure to use the Public Law 94–171 population data in redistricting does not, by itself, constitute a reason for denial of preclearance. However, unless other population data can be shown to be more accurate and reliable than the Public Law 94–171 data, the Department of Justice will consider the Public Law 94–171 data to measure the total population and voting age population within a jurisdiction for purposes of its Section 5 analysis.

The 2000 Census Public Law 94–171 data for the first time will include counts of persons who have identified themselves as members of more than one racial category. This decision reflects the October 30, 1997 decision by the Office of Management and Budget [OMB] to incorporate multiple-race reporting into the federal statistical system. *See* 62 FR 58782–58790. On March 9, 2000, OMB issued Bulletin No. 00–02 addressing ''Guidance on Aggregation and Allocation of Data on Race for Use in Civil Rights Enforcement.'' Part II of that Bulletin describes how such responses will be allocated for use in civil rights monitoring and enforcement.

For voting rights enforcement purposes, the Department of Justice will be guided by Part II of the Bulletin in its use of Census data. The following is an example, based on the data from the 1998 Dress Rehearsal Census in Columbia, South Carolina, of how such data will be allocated by the Department when analyzing redistricting submissions.

Total population		662,140
Non-Hispanic	649,413	(98.1%)
White	374,291	(56.5%)
Black or African American	262,384	(39.6%)
Asian	6,161	(0.9%)
American Indian/Alaska Native	2,995	(0.5%)
Native Hawaiian or Other Pacific Uslander	375	(0.0%)
Some other race	882	(0.1%)
Other Multiple-Race (where more than one minority race is listed)	2,330	(0.4%)
Hispanic	12,727	(1.9%)

Pursuant to Part II of OMB Bulletin 00–02, any multiple-race response that included white and one of the five other race categories was allocated to the minority race listed in the response. Thus, the numbers above for Black/African American, Asian, American Indian/Alaska Native, Native Hawaiian or Other Pacific Islander and Some other race reflect the total of the single race responses and the multiple-race responses in which the minority race and white race were listed. For example, for the Black/African American category, there were 261,142 single race responses and 1,242 multiple-race responses in which the races listed were White and Black/African American. This adds up to the total calculated above of 262,384.

The Other Multiple-Race category is comprised of all multiple-race responses where there is more than one minority race listed. The number above (2,330) reflects the total number of responses of forty two such categories in the Columbia data where at least one response was indicated. In our analysis, we will examine this multiple-race data and if it appears that any one of these categories has significant numbers of responses (for example, if the Black/African American and American Indian/Alaska Native category, alone, indicates a significant number of responses), those responses will be allocated alternatively to each of the component single-race categories for analysis, as indicated in Part II of the OMB Bulletin. It is important to note that current research indicates that multiple-race responses are expected to be small. This is especially true with respect to multiple-race categories with two or more minority races. For example, in the Columbia data, the largest such groups are only 0.1 percent (American Indian/Alaska Native and Black/African/American; and Asian and Black/African American). In light of this, the impact of such multiple-race responses on the Department of Justice's analysis of census data pursuant to its responsibilities under the Voting Rights Act is expected to be minimal.

As in the past, the Department will analyze Hispanic voters as a separate group for purposes of enforcement of the Voting Rights Act. If there are significant numbers of responses which report Hispanics and one or more minority races (for example, Hispanics who list their race as Black/African-American), those responses will be allocated alternatively to the Hispanic category and the minority race category.

Dated: January 11, 2001.

Bill Lann Lee,

Assistant Attorney General, Civil Rights Division.

[FR Doc. 01–1488 Filed 1–17–01; 8:45 am]

BILLING CODE 4410–13–P

Federal Register

Thursday,
January 18, 2001

Part XVI

The President

Proclamation 7390—Martin Luther King, Jr., Federal Holiday, 2001

Executive Order 13188—Amendment to Executive Order 13111, Extension of the Advisory Committee on Expanding Training Opportunities

Federal Register
Vol. 66, No. 12
Thursday, January 18, 2001

Presidential Documents

Title 3—

The President

Proclamation 7390 of January 12, 2001

Martin Luther King, Jr., Federal Holiday, 2001

By the President of the United States of America

A Proclamation

Seventy-two years ago, Martin Luther King, Jr., was born into a sharply divided Nation, a place where the color of a child's skin too often determined that child's destiny. America was a place where segregation and discrimination put limits on a black child's dreams, opportunities, and future.

Dr. King led America to a better place. With eloquence, he articulated the struggles and hopes of generations of African Americans. With the power of his leadership, he rallied Americans of every race and creed to join together in the march for justice. With courage, conviction, and faith in God, he sought to make real in everyday practice—in schools, in the workplace, in public accommodations, and in the hearts and minds of his fellow citizens—the civil rights victories that had been won in the courts.

Although his life was cruelly cut short before his mission was complete, he helped put our Nation firmly on the right path, where the ideals of liberty, equality, brotherhood, and justice are not merely words on a page, but values honored by all. ''Our freedom was not won a century ago,'' he said in 1968, ''it is not won today; but some small part of it is in our hands, and we are marching no longer by ones and twos but in legions of thousands, convinced now it cannot be denied by any human force.''

It is up to each of us to continue that march. The gallant freedom riders and freedom fighters of the civil rights era are growing older, and many, like Martin Luther King, Jr., are no longer among us. But their work must go on. There are still too many in our Nation who do not share equally in America's prosperity; minority unemployment and poverty rates, while decreasing, are still far above the national average; and the technical skills and resources needed for success in the global economy are still out of reach for hundreds of thousands of young Americans growing up in disadvantaged communities.

I encourage my fellow Americans to use this holiday, dedicated to the memory of Dr. Martin Luther King, Jr., and to his spirit of service, not as a day off, but rather as a day to make a difference in the lives of others—an opportunity to recognize where we have fallen short, to reach out to those who have been left behind, and to remove the barriers that keep us from becoming the promised land that Dr. King envisioned.

NOW, THEREFORE, I, WILLIAM J. CLINTON, President of the United States of America, by virtue of the authority vested in me by the Constitution and laws of the United States, do hereby proclaim Monday, January 15, 2001, as the Martin Luther King, Jr., Federal Holiday. I call upon all Americans to observe this occasion with appropriate programs, ceremonies, and activities in honor of Dr. King's life and achievements and in response to his call to service.

IN WITNESS WHEREOF, I have hereunto set my hand this twelfth day of January, in the year of our Lord two thousand one, and of the Independence of the United States of America the two hundred and twenty-fifth.

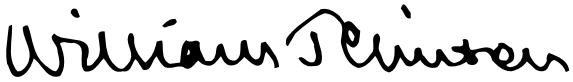

[FR Doc. 01–1735
Filed 1–17–01; 8:45 am]
Billing code 3195–01–P

Presidential Documents

Executive Order 13188 of January 12, 2001

Amendment to Executive Order 13111, Extension of the Advisory Committee on Expanding Training Opportunities

By the authority vested in me as President by the Constitution and the laws of the United States, including the Federal Advisory Committee Act, as amended (5 U.S.C. App.), and in order to extend the Advisory Committee on Expanding Training Opportunities for 2 years, it is hereby ordered that section 7(f) of Executive Order 13111 of January 12, 1999, is amended by deleting ''2 years from the date of this order'' and inserting ''on January 11, 2003'' in lieu thereof.

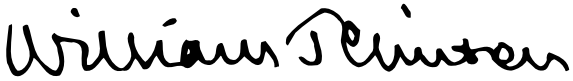

THE WHITE HOUSE,
January 12, 2001.

[FR Doc. 01–1736
Filed 1–17–01; 8:45 am]
Billing code 3195–01–P

Reader Aids

Federal Register

Vol. 66, No. 12

Thursday, January 18, 2001

CUSTOMER SERVICE AND INFORMATION

Federal Register/Code of Federal Regulations

General Information, indexes and other finding aids	**202–523–5227**
Laws	**523–5227**
Presidential Documents	
Executive orders and proclamations	**523–5227**
The United States Government Manual	**523–5227**
Other Services	
Electronic and on-line services (voice)	**523–4534**
Privacy Act Compilation	**523–3187**
Public Laws Update Service (numbers, dates, etc.)	**523–6641**
TTY for the deaf-and-hard-of-hearing	**523–5229**

ELECTRONIC RESEARCH

World Wide Web

Full text of the daily Federal Register, CFR and other publications:

http://www.access.gpo.gov/nara

Federal Register information and research tools, including Public Inspection List, indexes, and links to GPO Access:

http://www.nara.gov/fedreg

E-mail

PENS (Public Law Electronic Notification Service) is an E-mail service for notification of recently enacted Public Laws. To subscribe, send E-mail to

listserv@listserv.gsa.gov

with the text message:

subscribe PUBLAWS-L your name

Use listserv@www.gsa.gov only to subscribe or unsubscribe to PENS. We cannot respond to specific inquiries.

Reference questions. Send questions and comments about the Federal Register system to:

info@fedreg.nara.gov

The Federal Register staff cannot interpret specific documents or regulations.

FEDERAL REGISTER PAGES AND DATE, JANUARY

1–226 2
227–704 3
705–1012 4
1013–1252 5
1253–1560 8
1561–1806 9
1807–2192 10
2193–2794 11
2795–3438 12
3439–3852 16
3853–4606 17
4607–5420 18

CFR PARTS AFFECTED DURING JANUARY

At the end of each month, the Office of the Federal Register publishes separately a List of CFR Sections Affected (LSA), which lists parts and sections affected by documents published since the revision date of each title.

3 CFR

Executive Orders:
13111 (amended by EO 13188) 5423
13184 697
13185 701
13186 3853
13187 3857
13188 5423
12543 (continued by Notice of January 4, 2001) 1251
12544 (continued by Notice of January 4, 2001) 1251
12640 (revoked by EO 13187)
13078 (amended by EO 13187)

Proclamations:
7389 703
7390 5421

Administrative Orders:
Presidential Determinations
No. 2001–05 of December 15, 2000 223
No. 2001–06 of December 15, 2000 225
No. 2001–07 of December 19, 2000 1013
No. 2001–08 of December 27, 2000 1561
No. 2001–09 of January 3, 2001 2193
Memorandums:
Memorandum of March 3, 2000 3851
Notices:
January 4, 2001 1251

5 CFR

537 2790
792 705
2604 3439

7 CFR

54 1190
215 2195
225 2195
226 2195
245 2195
271 2795
272 4438
273 4438
278 2795
302 1015
760 2800
770 1563
905 227
930 ..... 229, 232
944 227
989 705
1436 4607
1446 1807
1823 1563
1902 1563
1910 1570
1941 1570
1951 1563
1956 1563

Proposed Rules:
301 3505
929 2838
930 1909
955 1915
1721 1604

8 CFR

212 ..... 235, 1017, 3440

Proposed Rules:
212 1053

9 CFR

2 236
3 239
331 2206
381 ..... 1750, 2206
441 1750

Proposed Rules:
317 4970
381 4970

10 CFR

5 708
34 1573
36 1573
39 1573
72 ..... 1573, 3444
430 ..... 3314, 4474
431 3336
490 2207
719 4616
830 1810
1040 4628
1042 4628
1044 4629

Proposed Rules:
50 3886

12 CFR

35 2052
201 2211
207 2052
225 ..... 257, 400
303 1018
337 1018
346 2052
362 1018
533 2052
1501 257

1780 709
Proposed Rules:
225 307
1501 307

13 CFR

126 4643

14 CFR

25 261
39 ....1, 2, 5, 7, 263, 264, 265, 267, 1031, 1253, 1255, 1574, 1827, 1829, 2212, 3448, 3859, 3861, 4646, 4648, 4649, 4651, 4654, 4656, 4659
71 ....1033, 1831, 2214, 2801
91 1002
93 1002
97 ....2802, 2803
121 1002
135 1002
405 2176
406 2176
Proposed Rules:
39 ....57, 59, 61, 64, 1054, 1057, 1271, 1273, 1607, 1609, 1612, 1917, 1919, 3382, 3511, 3515, 3516, 3518, 3521
71 ....1921, 2850, 3886, 3887

15 CFR

902 3450
922 4268

17 CFR

1 1375
140 1574
239 3734
240 3734
270 3734
274 3734

18 CFR

381 3451

20 CFR

401 2805
402 2805
403 2805
645 269
655 1375
Proposed Rules:
369 314
404 1059
416 1059

21 CFR

14 1257
291 4076
314 1832
522 711
524 712
558 1832
606 1834
640 1834
1306 2214
Proposed Rules:
14 1276
16 3523
20 4688
192 4706
312 4688
592 4706
601 4688
807 3523
1271 1508

22 CFR

41 1033
Proposed Rules:
41 1064

23 CFR

655 1446
940 1446

24 CFR

888 162
1003 4578
Proposed Rules:
203 2851
941 1008

25 CFR

103 3861
151 3452
170 1576

26 CFR

1 ....268, 279, 280, 713, 715, 723, 1034, 1038, 1040, 1837, 2215, 2219, 2241, 2252, 2256, 2811, 2817, 4661
7 ....2256, 2821
20 1040
25 1040
53 2144
54 ....1378, 1843
301 ....725, 2144, 2257, 2261, 2817
602 ....280, 2144, 2219, 2241, 2252
Proposed Rules:
1 ....66, 76, 315, 319, 747, 748, 1066, 1923, 2373, 2852, 2854, 3888, 3903, 3916, 3920, 3924, 3925, 3928, 3954, 4738, 4746, 4751, 5754
7 2856
31 ....3925, 3956
53 2173
54 ....1421, 1435, 1437, 3928
301 ....77, 749, 2173, 2373, 2854, 3959
601 3954

28 CFR

Ch. VIII 1259

29 CFR

4 5328
1910 5318
1926 5196
1956 2265
2590 1378
4022 2822
4044 2822
Proposed Rules:
2590 1421
4003 2857
4007 2857
4071 2857

30 CFR

Proposed Rules:
256 1277
914 2374
931 4672
944 1616
948 ....335, 2866

31 CFR

501 2726
538 2726
540 3304
545 2726
Proposed Rules:
10 3276

32 CFR

Proposed Rules:
326 1280

33 CFR

66 8
95 1859
100 ....1044, 1580
117 ....1045, 1262, 1583, 1584, 1863, 3466
155 3876
177 1859
323 4550
Proposed Rules:
117 ....1281, 1923

34 CFR

300 1474
361 4380
606 1262

36 CFR

219 1864
212 3206
261 3206
294 3244
295 3206
Proposed Rules:
7 1069

38 CFR

Proposed Rules:
3 2376

40 CFR

9 3770
31 3782
35 ....1726, 2823, 3782
52 ....8, 586, 634, 666, 730, 1046, 1866, 1868, 1871
63 ....1263, 1584, 3180
69 5002
70 16
80 5002
81 1268
82 1462
86 5002
136 3466
141 ....2273, 3466, 3466
142 3770
143 3466
180 ....296, 298, 1242, 1592, 1875, 2308
232 4550
271 ....22, 23, 28, 33, 733
372 4500
745 ....1206, 1726
1610 1050
Proposed Rules:
2 2870
52 ....1796, 1925, 1927, 4756
63 1618
70 ....84, 85
122 2960
123 4768
136 3526
141 3526
143 3526
271 ....85, 86
300 2380
412 2960
413 424
433 424
438 424
463 424
464 424
467 424
471 424

41 CFR

101-6 5362
101-17 5362
101-18 5362
101-19 5362
101-20 5362
101-33 5362
101-47 5362
102-71 5362
102-72 5362
102-73 5362
102-74 5362
102-75 5362
102-76 5362
102-77 5362
102-78 5362
102-79 5362
102-80 5362
102-81 5362
102-82 5362

42 CFR

8 4076
411 ....856, 3497
413 ....1599, 3358, 3497
416 4674
422 3358
424 856
431 2490
433 2490
435 ....2316, 2490
436 2490
447 3148
457 2490
482 4674
485 4674
489 ....1599, 3497
Proposed Rules:
413 3377

43 CFR

3100 1883
3106 1883
3108 1883
3130 1883
3160 1883
3162 1883
3165 1883

44 CFR

64 2825
65 1600
Proposed Rules:
67 1618

45 CFR

46 3878
146 1378
1310 5296

Proposed Rules:
146 1421

46 CFR

Proposed Rules:
66 2385
110 1283
111 1283

47 CFR

1 ....33, 2322, 3499
51 2335
64 2322
68 2322
73 ....737, 2336, 3883, 3884
74 3884
90 33
301 4771

Proposed Rules:
1 ....86, 341, 1622
2 341
3 1283
5 1283
25 3960
64 1622
73 ....2395, 2396
90 86

48 CFR

Ch. I 2116, 2141, 5352
1 ....1117, 2140
2 2117
3 2117
4 2117
5 2117
6 2117
7 2117
8 2117
9 2117
11 2117
13 2117
14 2117
15 2117
17 2117
19 ....2117, 2140
22 ....2117, 2140, 5349
23 2117
24 2117
26 2117
27 2117
28 2117
29 2117
30 2136
31 2117
32 2117
33 2117
34 2117
35 2117
36 2117
37 2117
39 2117
42 ....2117, 2136, 2137, 2139, 2140
43 2117
44 2117
47 2117
48 2117
49 2117
50 2117
52 ....2117, 5349
53 2140
Ch. 3 4220

Proposed Rules:
8 2752
52 2752
931 4616
970 4616

49 CFR

1 2827
40 3884
213 1894
229 4104
231 4104
232 4104
390 2756
575 3388
1247 1051

Proposed Rules:
10 1294
174 2870
177 2870
214 1930
229 136
385 2767
390 2767
398 2767
567 90
571 ....968, 3527
591 90
592 90
594 90

50 CFR

17 2828,
18 1901
20 ....737, 1052
86 5282
223 1601
229 2336
600 2338
635 ....55, 1907
660 2338
679 ....742, 1375, 3502

Proposed Rules:
17 ....345, 1295, 1628, 1631, 1633, 3964, 4782, 4783
216 2872
648 ....91, 1634
660 ....1945, 2873
679 3976

REMINDERS

The items in this list were editorially compiled as an aid to Federal Register users. Inclusion or exclusion from this list has no legal significance.

RULES GOING INTO EFFECT JANUARY 18, 2001

AGRICULTURE DEPARTMENT
Agricultural Marketing Service
Raisins produced from grapes grown in—
California; published 12-19-00

AGRICULTURE DEPARTMENT
Commodity Credit Corporation
Grants:
Farm Storage Facility Loan Program; published 1-18-01

EDUCATION DEPARTMENT
Postsecondary education:
Developing Hispanic-Serving Institutions, Strengthening Institutions, American Indian Tribally Controlled Colleges and Universities Programs, etc.; published 12-19-00

ENVIRONMENTAL PROTECTION AGENCY
Air quality implementation plans; approval and promulgation; various States:
California; published 12-19-00

GENERAL SERVICES ADMINISTRATION
Federal Management Regulation:
Real property policies; published 1-18-01

INTERIOR DEPARTMENT
Surface Mining Reclamation and Enforcement Office
Surface coal mining and reclamation operations:
New Mexico; recodification; published 1-18-01
Ownership and control of mining operations; definitions, permit requirements, enforcement actions, etc.; published 12-19-00

PERSONNEL MANAGEMENT OFFICE
Prevailing rate systems; published 12-19-00

TRANSPORTATION DEPARTMENT
Workplace drug and alcohol testing programs:
Procedures; revision; published 12-19-00
Procedures; revision; correction; published 1-17-01

TRANSPORTATION DEPARTMENT
Federal Aviation Administration
Airworthiness standards:
Transport category airplanes—
Powerplant installations; fire protection requirements; published 12-19-00

COMMENTS DUE NEXT WEEK

AGRICULTURE DEPARTMENT
Agricultural Marketing Service
Agricultural commodities:
Potatoes (Irish) grown in—
Washington; comments due by 1-23-01; published 11-24-00
Washington; correction; comments due by 1-23-01; published 11-29-00
Cherries (tart) grown in—
Michigan et al.; comments due by 1-25-01; published 1-10-01

CHEMICAL SAFETY AND HAZARD INVESTIGATION BOARD
Privacy Act; implementation; comments due by 1-26-01; published 12-27-00

COMMERCE DEPARTMENT
National Oceanic and Atmospheric Administration
Marine mammals:
Incidental taking—
Naval activities; USS Winston S. Churchill shock testing; comments due by 1-26-01; published 12-12-00

COMMERCE DEPARTMENT
Patent and Trademark Office
Civil actions and claims; legal processes; comments due by 1-22-01; published 12-22-00

ENVIRONMENTAL PROTECTION AGENCY
Acquisition regulations:
Technical amendment; comments due by 1-22-01; published 12-22-00
Air quality implementation plans; approval and promulgation; various States:
Colorado; comments due by 1-22-01; published 12-22-00
Illinois; comments due by 1-26-01; published 12-27-00
Texas; comments due by 1-26-01; published 12-27-00
Wyoming; comments due by 1-22-01; published 12-21-00
Toxic substances:
Significant new uses—
Tetrahydrohetero polycycle, etc.; comments due by 1-25-01; published 12-26-00

FEDERAL COMMUNICATIONS COMMISSION
Common carrier services:
International telecommunications services; biennial regulatory review; comments due by 1-24-01; published 12-20-00
Local telecommunications markets; competitive networks promotion; comments due by 1-22-01; published 1-9-01
Digital television stations; table of assignments:
Maine; comments due by 1-25-01; published 12-6-00
Nebraska; comments due by 1-22-01; published 12-6-00
West Virginia; comments due by 1-22-01; published 12-6-00
Practice and procedure:
Exempt presentations; comments due by 1-25-01; published 12-26-00
Radio and television broadcasting:
Radio markets, defining and counting; compliance with multiple ownership rules; comments due by 1-26-01; published 12-28-00

FEDERAL DEPOSIT INSURANCE CORPORATION
Risk-based capital standards:
Claims on securities firms; comments due by 1-22-01; published 12-6-00

FEDERAL RESERVE SYSTEM
Risk-based capital standards:
Claims on securities firms; comments due by 1-22-01; published 12-6-00

HEALTH AND HUMAN SERVICES DEPARTMENT
Health Care Financing Administration
Medicare:
Medicare+Choice program—
Providers; recredentialing requirements; comments due by 1-26-01; published 12-27-00

HOUSING AND URBAN DEVELOPMENT DEPARTMENT
Federal Housing Enterprise Oversight Office
Practice and procedure:
Federal National Mortgage Association and Federal Home Loan Mortgage Corporation—
Assessments; comments due by 1-26-01; published 12-27-00

INTERIOR DEPARTMENT
Fish and Wildlife Service
Endangered and threatened species:
Critical habitat designations—
California red-legged frog; comments due by 1-22-01; published 12-21-00

INTERIOR DEPARTMENT
Surface Mining Reclamation and Enforcement Office
Permanent program and abandoned mine land reclamation plan submissions:
Utah; comments due by 1-24-01; published 1-9-01

JUSTICE DEPARTMENT
Immigration and Naturalization Service
Immigration:
Asylum and withholding definitions; comments due by 1-22-01; published 12-7-00

POSTAL SERVICE
Privacy Act:
Systems of records; comments due by 1-26-01; published 12-27-00
Privacy Act; implementation; comments due by 1-26-01; published 12-27-00

TRANSPORTATION DEPARTMENT
Federal Aviation Administration
Airworthiness directives:
Boeing; comments due by 1-22-01; published 11-21-00
General Electric Co.; comments due by 1-23-01; published 11-24-00
McDonnell Douglas; comments due by 1-22-01; published 12-6-00
Saab; comments due by 1-22-01; published 12-21-00
Teledyne Continental Motors; comments due by 1-26-01; published 11-27-00
Airworthiness standards:
Special conditions—

Gulfstream Aerospace Corp.; comments due by 1-22-01; published 12-6-00

Pratt & Whitney Canada, Inc., Model PT6T-9 turboshaft engine; comments due by 1-26-01; published 12-27-00

TRANSPORTATION DEPARTMENT

Federal Motor Carrier Safety Administration

Motor carrier identification report; filing requirements; comments due by 1-23-01; published 11-24-00

TRANSPORTATION DEPARTMENT

National Highway Traffic Safety Administration

Motor vehicle safety standards:

Rear visibility systems; rear cross-view mirrors; comments due by 1-26-01; published 11-27-00

TREASURY DEPARTMENT

Comptroller of the Currency

Risk-based capital standards:

Claims on securities firms; comments due by 1-22-01; published 12-6-00

TREASURY DEPARTMENT

Thrift Supervision Office

Risk-based capital standards:

Claims on securities firms; comments due by 1-22-01; published 12-6-00

LIST OF PUBLIC LAWS

Note: The List of Public Laws for the 106th Congress, Second Session has been completed and will resume when bills are enacted into public law during the next session of Congress.

A cumulative List of Public Laws was published in Part II of the **Federal Register** on January 16, 2001.

Public Laws Electronic Notification Service (PENS)

Note: PENS will resume service when bills are enacted into law during the next session of Congress.

This service is strictly for E-mail notification of new laws. The text of laws is not available through this service. **PENS** cannot respond to specific inquiries sent to this address.