AUTHENTICATED
U.S. GOVERNMENT
INFORMATION
GPO

Federal Register

7–3–01 Tuesday
Vol. 66 No. 128 July 3, 2001
Pages 35077–35364

The **FEDERAL REGISTER** is published daily, Monday through Friday, except official holidays, by the Office of the Federal Register, National Archives and Records Administration, Washington, DC 20408, under the Federal Register Act (44 U.S.C. Ch. 15) and the regulations of the Administrative Committee of the Federal Register (1 CFR Ch. I). The Superintendent of Documents, U.S. Government Printing Office, Washington, DC 20402 is the exclusive distributor of the official edition.

The **Federal Register** provides a uniform system for making available to the public regulations and legal notices issued by Federal agencies. These include Presidential proclamations and Executive Orders, Federal agency documents having general applicability and legal effect, documents required to be published by act of Congress, and other Federal agency documents of public interest.

Documents are on file for public inspection in the Office of the Federal Register the day before they are published, unless the issuing agency requests earlier filing. For a list of documents currently on file for public inspection, see http://www.nara.gov/fedreg.

The seal of the National Archives and Records Administration authenticates the Federal Register as the official serial publication established under the Federal Register Act. Under 44 U.S.C. 1507, the contents of the **Federal Register** shall be judicially noticed.

The **Federal Register** is published in paper and on 24x microfiche. It is also available online at no charge as one of the databases on GPO Access, a service of the U.S. Government Printing Office.

The online edition of the **Federal Register** is issued under the authority of the Administrative Committee of the Federal Register as the official legal equivalent of the paper and microfiche editions (44 U.S.C. 4101 and 1 CFR 5.10). It is updated by 6 a.m. each day the **Federal Register** is published and it includes both text and graphics from Volume 59, Number 1 (January 2, 1994) forward.

GPO Access users can choose to retrieve online **Federal Register** documents as TEXT (ASCII text, graphics omitted), PDF (Adobe Portable Document Format, including full text and all graphics), or SUMMARY (abbreviated text) files. Users should carefully check retrieved material to ensure that documents were properly downloaded.

On the World Wide Web, connect to the **Federal Register** at http://www.access.gpo.gov/nara. Those without World Wide Web access can also connect with a local WAIS client, by Telnet to swais.access.gpo.gov, or by dialing (202) 512-1661 with a computer and modem. When using Telnet or modem, type swais, then log in as guest with no password.

For more information about GPO Access, contact the GPO Access User Support Team by E-mail at gpoaccess@gpo.gov; by fax at (202) 512–1262; or call (202) 512–1530 or 1–888–293–6498 (toll free) between 7 a.m. and 5 p.m. Eastern time, Monday–Friday, except Federal holidays.

The annual subscription price for the **Federal Register** paper edition is $638, or $697 for a combined **Federal Register,** Federal Register Index and List of CFR Sections Affected (LSA) subscription; the microfiche edition of the **Federal Register** including the Federal Register Index and LSA is $253. Six month subscriptions are available for one-half the annual rate. The charge for individual copies in paper form is $9.00 for each issue, or $9.00 for each group of pages as actually bound; or $2.00 for each issue in microfiche form. All prices include regular domestic postage and handling. International customers please add 25% for foreign handling. Remit check or money order, made payable to the Superintendent of Documents, or charge to your GPO Deposit Account, VISA, MasterCard or Discover. Mail to: New Orders, Superintendent of Documents, P.O. Box 371954, Pittsburgh, PA 15250–7954.

There are no restrictions on the republication of material appearing in the **Federal Register.**

How To Cite This Publication: Use the volume number and the page number. Example: 66 FR 12345.

SUBSCRIPTIONS AND COPIES

PUBLIC	
Subscriptions:	
Paper or fiche	**202–512–1800**
Assistance with public subscriptions	**512–1806**
General online information	**202–512–1530; 1–888–293–6498**
Single copies/back copies:	
Paper or fiche	**512–1800**
Assistance with public single copies	**512–1803**
FEDERAL AGENCIES	
Subscriptions:	
Paper or fiche	**523–5243**
Assistance with Federal agency subscriptions	**523–5243**

Printed on recycled paper.

Contents

Federal Register

Vol. 66, No. 128

Tuesday, July 3, 2001

Agency for Toxic Substances and Disease Registry
NOTICES
Grants and cooperative agreements; availability, etc.:
Alaska Traditional Diet Project, 35245–35247

Agriculture Department
See Animal and Plant Health Inspection Service
See Food Safety and Inspection Service
See Natural Resources Conservation Service

Animal and Plant Health Inspection Service
NOTICES
Animal welfare:
Horse Protection Act—
Designated Qualified Persons; list of individuals trained to detect or diagnose sored horses, 35221

Arts and Humanities, National Foundation
See National Foundation on the Arts and the Humanities

Centers for Disease Control and Prevention
NOTICES
Agency information collection activities:
Reporting and recordkeeping requirements, 35247–35250
Grants and cooperative agreements; availability, etc.:
American Indian tribal colleges and universities; research, infrastructure, and capacity building enhancement, 35250–35253

Coast Guard
RULES
Ports and waterways safety:
Milwaukee Harbor, WI; safety zone, 35080–35082

Commerce Department
See Foreign-Trade Zones Board
See International Trade Administration
See National Oceanic and Atmospheric Administration
NOTICES
Agency information collection activities:
Submission for OMB review; comment request, 35222–35223

Committee for the Implementation of Textile Agreements
NOTICES
Cotton, wool, and man-made textiles:
India, 35224
Philippines, 35225

Defense Department
NOTICES
Agency information collection activities:
Proposed collection; comment request, 35225–35226
Practice and procedure:
U.S. Court of Appeals for Armed Forces; changes to rules, 35226–35230

Drug Enforcement Administration
NOTICES
Applications, hearings, determinations, etc.:
Abbott Laboratories, 35268
Medeva Pharmaceuticals CA, Inc., 35268–35269
National Center for Development of Natural Products, University of Mississippi, 35269
Norac Co., Inc., 35269–35270

Education Department
NOTICES
Agency information collection activities:
Submission for OMB review; comment request, 35230–35231

Energy Department
See Federal Energy Regulatory Commission
NOTICES
Grants and cooperative agreements; availability, etc.:
Advanced Detector Research Program, 35231–35232
Meetings:
DOE/NSF Nuclear Science Advisory Committee, 35232
Environmental Management Site-Specific Advisory Board—
Fernald Site, OH, 35232–35233
Los Alamos National Laboratory, NM, 35233

Environmental Protection Agency
RULES
Air pollutants, hazardous; national emission standards:
Hazardous waste combustors, 35087–35107
Air programs; State authority delegations:
New Jersey, 35083–35087
PROPOSED RULES
Air pollutants, hazardous; national emission standards:
Coke ovens: pushing, quenching, and battery stacks, 35325–35357
Hazardous waste combustors, 35124–35155
Air programs; State authority delegations:
New Jersey, 35124
Tennessee, 35115–35124
NOTICES
Agency information collection activities:
Submission for OMB review; comment request, 35239–35240
Grants and cooperative agreements; availability, etc.:
Climate change and variability impacts on aquatic ecosystems and water quality; location-specific assessments, 35240–35241
Water supply:
Public water supply supervision program—
Texas, 35241

Executive Office of the President
See Presidential Documents
See Trade Representative, Office of United States

Federal Aviation Administration
RULES
Airworthiness directives:
Boeing, 35077–35080
CFM International, S.A.
Correction, 35077
Class E airspace, 35080
NOTICES
Agency information collection activities:
Submission for OMB review; comment request, 35315–35316

Exemption petitions; summary and disposition, 35316–35317

Federal Communications Commission
RULES
Common carrier services:
Federal-State Joint Board on Universal Service—
Jurisdictional separations reform and referral, 35107
Radio services, special:
Fixed microwave services—
Multiple address systems; reconsideration and/or clarification petitions, 35107–35111
Radio stations; table of assignments:
Alaska; correction, 35107
NOTICES
Common carrier services:
Terminal equipment, connection to telephone network—
Customer premises equipment; technical criteria; certification applications and waiver petitions, 35241–35242

Federal Energy Regulatory Commission
NOTICES
Electric rate and corporate regulation filings:
Kinder Morgan Power Co., et al., 35236–35238
Environmental statements; availability, etc.:
Calligan Hydro Inc., 35238–35239
Hydroelectric applications, 35239
Applications, hearings, determinations, etc.:
Eastern Shore Natural Gas Co., 35233–35234
Petal Gas Storage, L.L.C., 35234–35235
Transcontinental Gas Pipe Line Corp., 35235–35236

Federal Maritime Commission
NOTICES
Meetings; Sunshine Act, 35242

Federal Reserve System
NOTICES
Banks and bank holding companies:
Formations, acquisitions, and mergers, 35242
Meetings; Sunshine Act, 35242–35243

Federal Retirement Thrift Investment Board
NOTICES
Meetings; Sunshine Act, 35243

Fish and Wildlife Service
PROPOSED RULES
National Wildlife Refuge System:
Hunting and fishing—
Refuge-specific regulations, 35193–35209
NOTICES
Endangered and threatened species permit applications, 35264–35265
Marine mammal permit applications, 35265–35266

Food Safety and Inspection Service
PROPOSED RULES
Meat and poultry inspection:
Processed meat and poultry products; performance standards, 35112

Foreign-Trade Zones Board
NOTICES
Applications, hearings, determinations, etc.:
Mississippi
Nissan North America, Inc.; motor vehicle manufacturing plant, 35223–35224

Government Ethics Office
NOTICES
Agency information collection activities:
Proposed collection; comment request, 35243–35244

Health and Human Services Department
See Agency for Toxic Substances and Disease Registry
See Centers for Disease Control and Prevention
See Health Care Financing Administration
See Substance Abuse and Mental Health Services Administration
NOTICES
Grants and cooperative agreements; availability, etc.:
Manpower Demonstration Research Corp., 35244–35245
Poverty Research Centers; non-competitive extension, 35245

Health Care Financing Administration
NOTICES
Agency information collection activities:
Submission for OMB review; comment request, 35253
Medicare:
Home health agencies; prospective payment system update (2002 FY)
Correction, 35253–35260
Meetings:
Physician query forms; town hall meeting, 35260–35261

Immigration and Naturalization Service
NOTICES
Temporary protected status program designations:
Honduras and Nicaragua, 35270–35271

Interior Department
See Fish and Wildlife Service
See National Park Service
See Surface Mining Reclamation and Enforcement Office

Internal Revenue Service
PROPOSED RULES
Income taxes:
Simplified production, and resale methods with historic absorption ratio election; special rules; withdrawn, 35112–35113
NOTICES
Agency information collection activities:
Proposed collection; comment request, 35320–35323

International Trade Administration
NOTICES
Applications, hearings, determinations, etc.:
Woods Hole Oceanographic Institute, 35224

International Trade Commission
NOTICES
Import investigations:
Steel, 35267–35268
Meetings; Sunshine Act, 35268

Justice Department
See Drug Enforcement Administration
See Immigration and Naturalization Service

Labor Department
See Occupational Safety and Health Administration

National Foundation on the Arts and the Humanities
NOTICES
Meetings:
Humanities Panel, 35281–35282

National Highway Traffic Safety Administration
PROPOSED RULES
Consumer information:
Light motor vehicles; rollover resistance; driving maneuver tests evaluation, 35179–35193
Motor vehicle safety standards:
Economic impact on small businesses entities, 35177–35179

National Oceanic and Atmospheric Administration
PROPOSED RULES
Marine mammals:
Protected species special exception permits, 35209–35220

National Park Service
RULES
Concession contracts; solicitation, award, and administration, 35082–35083
NOTICES
Boundary establishment, descriptions, etc.:
Piscataway Park, MD, 35266

Natural Resources Conservation Service
NOTICES
Meetings:
Animal feeding operations and comprehensive nutrient management plans development and implementation; private sector vendors' technical assistance; forums, 35221–35222

Nuclear Regulatory Commission
NOTICES
Environmental statements; availability, etc.:
Consolidated Edison Co. of New York, Inc., 35282–35283
Florida Power & Light Co., 35283
Meetings:
Licensing Support Network Advisory Review Panel, 35284
Meetings; Sunshine Act, 35284

Occupational Safety and Health Administration
PROPOSED RULES
Occupational injuries and illnesses; recording and reporting requirements
Effective date delay; comment request, 35113–35115
NOTICES
Nationally recognized testing laboratories, etc.:
Canadian Standards Association, 35271–35278
Entela, Inc., 35278–35281

Office of United States Trade Representative
See Trade Representative, Office of United States

Presidential Documents
PROCLAMATIONS
Special observances:
Black Music Month, (Proc. 7453), 35359–35362
ADMINISTRATIVE ORDERS
Afghanistan; continuation of emergency with respect to the Taliban (Notice of June 30, 2001), 35363

Public Health Service
See Agency for Toxic Substances and Disease Registry
See Centers for Disease Control and Prevention
See Substance Abuse and Mental Health Services Administration

Research and Special Programs Administration
PROPOSED RULES
Hazardous materials:
Incident reporting requirements and incident report form; revisions, 35155–35177
NOTICES
Hazardous materials:
Applications; exemptions, renewals, etc., 35317–35319
Pipeline safety:
Hazardous liquid transportation—
Pipeline integrity management in high consequence areas (Hazardous Liquid operators with 500 or more miles of pipeline), 35319

Securities and Exchange Commission
NOTICES
Agency information collection activities:
Submission for OMB review; comment request, 35285–35286
Self-regulatory organizations; proposed rule changes:
American Stock Exchange LLC, 35291–35292
Boston Stock Exchange, Inc., 35292–35301
Chicago Board Options Exchange, Inc., 35301–35303
New York Stock Exchange, Inc., 35303–35311
Pacific Exchange, Inc., 35312
Philadelphia Stock Exchange, Inc., 35312–35313
Applications, hearings, determinations, etc.:
Apex Municipal Fund, Inc., et al., 35286–35288
Huntington Funds, et al., 35289–35291

Sentencing Commission, United States
See United States Sentencing Commission

Small Business Administration
NOTICES
Agency information collection activities:
Reporting and recordkeeping requirements, 35314
Disaster loan areas:
Kansas, 35314

Substance Abuse and Mental Health Services Administration
NOTICES
Federal agency urine drug testing; certified laboratories meeting minimum standards, list, 35261–35263
Grants and cooperative agreements; availability, etc.:
Mental Health Services Center—
Statewide Family Networks Technical Assistance Center Program, 35263–35264

Surface Mining Reclamation and Enforcement Office
NOTICES
Agency information collection activities:
Submission for OMB review; comment request, 35266–35267

Surface Transportation Board
NOTICES
Railroad operation, acquisition, construction, etc.:
Massachusetts Bay Transportation Authority, 35319–35320

Textile Agreements Implementation Committee
See Committee for the Implementation of Textile Agreements

Toxic Substances and Disease Registry Agency
See Agency for Toxic Substances and Disease Registry

Trade Representative, Office of United States
NOTICES
Meetings:
Trade and Environment Policy Advisory Committee, 35314–35315
Trade Policy and Negotiations Advisory Committee, 35315

Transportation Department
See Coast Guard
See Federal Aviation Administration
See National Highway Traffic Safety Administration
See Research and Special Programs Administration
See Surface Transportation Board

Treasury Department
See Internal Revenue Service

United States Sentencing Commission
NOTICES
Sentencing guidelines and policy statements for Federal courts, 35313–35314

Separate Parts In This Issue

Part II
Environmental Protection Agency, 35325–35357

Part III
The President, 35359–35363

Reader Aids
Consult the Reader Aids section at the end of this issue for phone numbers, online resources, finding aids, reminders, and notice of recently enacted public laws.

CFR PARTS AFFECTED IN THIS ISSUE

A cumulative list of the parts affected this month can be found in the Reader Aids section at the end of this issue.

3 CFR

Proclamations:
7453 35361

Administrative Orders:
Notices:
Notice of June 30, 2001 35363

Executive Orders:
13129 (See Notice of June 30, 2001) 35363

9 CFR

Proposed Rules:
301 35112
303 35112
317 35112
318 35112
319 35112
320 35112
325 35112
331 35112
381 35112
417 35112
430 35112

14 CFR
39 (2 documents) 35077
71 35080

26 CFR

Proposed Rules:
1 35112

29 CFR

Proposed Rules:
1904 35113

33 CFR
165 35080

36 CFR
51 35082

40 CFR
63 (2 documents) 35083, 35087
264 35087

Proposed Rules:
61 35115
63 (5 documents) 35115, 35124, 35126, 35326
264 (2 documents) 35124, 35126
265 35126
266 35126
270 35126

47 CFR
36 35107
73 35107
101 35107

49 CFR

Proposed Rules:
171 35155
571 35177
575 35179

50 CFR

Proposed Rules:
32 35193
216 35209

Rules and Regulations

Federal Register
Vol. 66, No. 128
Tuesday, July 3, 2001

This section of the FEDERAL REGISTER contains regulatory documents having general applicability and legal effect, most of which are keyed to and codified in the Code of Federal Regulations, which is published under 50 titles pursuant to 44 U.S.C. 1510.

The Code of Federal Regulations is sold by the Superintendent of Documents. Prices of new books are listed in the first FEDERAL REGISTER issue of each week.

DEPARTMENT OF TRANSPORTATION

Federal Aviation Administration

14 CFR Part 39

[Docket No. 98–ANE–57; Amendment 39–12124; AD 2001–04–06]

RIN 2120–AA64

Airworthiness Directives; CFM International, S.A. CFM56–3, –3B, and –3C Series Turbofan Engines; Correction

AGENCY: Federal Aviation Administration, DOT.

ACTION: Final rule; correction.

SUMMARY: This document makes a correction to Airworthiness Directive (AD) 2001–04–06 applicable to CFM International, S.A. CFM56–3, –3B, and –3C series turbofan engines that was published in the **Federal Register** on February 28, 2001 (66 FR 12726). The information in paragraph (i) in the regulatory information is incorrect. This document corrects paragraph (i). In all other respects, the original document remains the same.

EFFECTIVE DATE: April 4, 2001.

FOR FURTHER INFORMATION CONTACT: Glorianne Niebuhr, Aerospace Engineer, Engine Certification Office, FAA, Engine and Propeller Directorate, 12 New England Executive Park, Burlington, MA 01803–5299; telephone (781) 238–7132, fax (781) 238–7199.

SUPPLEMENTARY INFORMATION: A final rule airworthiness directive applicable to CFM International, S.A. CFM56–3, –3B, and –3C series turbofan engines, was published in the **Federal Register** on February 28, 2001 (66 FR 12726). Paragraph (i) of the AD provided that inspection is not required for disks that have been rebroached ''prior to exceeding the .004 inch wear limit.'' This was incorrect as disks that have not yet reached the wear limit will not go through the rebroaching process. Only if a disk has exceeded the wear limit, will that disk be rebroached. Therefore, the FAA is correcting the AD by deleting reference to the wear limit in paragraph (i). Make the following correction to FR Doc. 01–4216:

§ 39.13 [Corrected]

On page 12729, in the second column, in AD 2001–04–06, in the Compliance Section, paragraph (i) is corrected to read as follows:

2001–04–06 CFM International: Amendment 39–12124. Docket 98–ANE–57–AD.

* * * * *

Compliance * * *

* * * * *

(i) Inspection is not required for fan disks that used lubricants identified in paragraph (g) of this AD but were then rebroached, then were not lubricated with the lubricants identified in paragraph (g) of this AD AND were equipped with fan blade configurations specified either in subparagraph (h)(1) or (h)(2) of this AD.

* * * * *

Issued in Burlington, MA, on June 19, 2001.

Jay J. Pardee,

Manager, Engine and Propeller Directorate, Aircraft Certification Service.

[FR Doc. 01–16048 Filed 7–2–01; 8:45 am]

BILLING CODE 4910–13–P

DEPARTMENT OF TRANSPORTATION

Federal Aviation Administration

14 CFR Part 39

[Docket No. 98–NM–271–AD; Amendment 39–12296; AD 2001–13–15]

RIN 2120–AA64

Airworthiness Directives; Boeing Model 757 Series Airplanes Equipped with Rolls Royce Engines

AGENCY: Federal Aviation Administration, DOT.

ACTION: Final rule.

SUMMARY: This amendment adopts a new airworthiness directive (AD), applicable to certain Boeing Model 757 series airplanes, that requires a one-time inspection to find wire chafing of the left and right engine fuel shutoff valve wire bundles at Power Plant Station 278 on each engine strut, and repair if necessary. This amendment also requires replacement of three wire support brackets with improved wire support brackets. This amendment is prompted by reports that such wire support brackets failed due to fatigue, which subsequently caused the fuel shutoff valve wire to chafe and to experience a short circuit. The actions specified by this AD are intended to prevent such conditions, which could result in either the possible ignition of fuel vapors in a flammable leakage zone or in the inability to stop the flow of fuel in the event of an engine fire.

DATES: Effective August 7, 2001.

The incorporation by reference of certain publications listed in the regulations is approved by the Director of the Federal Register as of August 7, 2001.

ADDRESSES: The service information referenced in this AD may be obtained from Boeing Commercial Airplane Group, P.O. Box 3707, Seattle, Washington 98124–2207. This information may be examined at the Federal Aviation Administration (FAA), Transport Airplane Directorate, Rules Docket, 1601 Lind Avenue, SW., Renton, Washington; or at the Office of the Federal Register, 800 North Capitol Street, NW., suite 700, Washington, DC.

FOR FURTHER INFORMATION CONTACT: Stephen S. Oshiro, Aerospace Engineer, Systems and Equipment Branch, ANM–130S, FAA, Seattle Aircraft Certification Office, 1601 Lind Avenue, SW., Renton, Washington 98055–4056; telephone (425) 227–2793; fax (425) 227–1181.

SUPPLEMENTARY INFORMATION: A proposal to amend part 39 of the Federal Aviation Regulations (14 CFR part 39) to include an airworthiness directive (AD) that is applicable to certain Boeing Model 757 series airplanes was published in the **Federal Register** on August 4, 1999 (64 FR 42050). That action proposed to require repetitive inspections to detect wire chafing of the left and right engine fuel shutoff valve wire bundles at Power Plant Station 278 on each engine strut, and repair if necessary. That action also proposed to require repetitive replacement of three wire support brackets with improved wire support brackets.

Comments

Interested persons have been afforded an opportunity to participate in the making of this amendment. Due

consideration has been given to the comments received.

Addition of Service Bulletin Information Notice

One commenter, the airplane manufacturer, indicates that during its investigation of the wire support bracket failure it established that Boeing Service Bulletin 757–54–0013, Revision 3, dated October 23, 1997 (cited in the proposal as the source of service information for doing the specified actions) contained an incorrect part number for an attachment fastener. The commenter adds that the part number was corrected in Boeing Information Notice 757–54–0013 IN 01, dated October 22, 1998.

The FAA infers that the commenter wants to add IN 01 to the service information cited in the final rule. Subsequent to receipt of this comment, we reviewed and approved Boeing Information Notice 757–54–0013 IN 02, dated April 8, 1999, which supersedes IN 01. IN 02 contains additional information for proper accomplishment of the modifications described in the service bulletin, as well as the corrected part number specified by the commenter. We concur with the commenter's request, but will add IN 02 to the service information cited in the final rule.

Revise Paragraph (a)

One commenter, the airplane manufacturer, states that it did an analysis of the new, improved wire support brackets to determine the fatigue level allowable. The analysis showed that the two lower aluminum brackets were undersized for the vibration environment in the aft strut area, and that the nickel alloy brackets were capable of withstanding the vibration environment, with fatigue allowables that exceed the stress levels by 80 percent. Analysis done on the third bracket showed that the aluminum brackets are also satisfactory. This analysis was conducted per standard Boeing practice for equipment in the nacelle and strut areas, using well-established stress values.

Based on the above information, the commenter states that replacing all 6 brackets every 12 months is unnecessary and will impose a considerable economic burden on affected operators. The commenter proposes revising paragraph (a) of the proposed rule as follows:

- Incorporate Boeing Service Bulletin 757–54–0013, Revision 3, dated October 23, 1997, within 12 months after the effective date of the AD. This would constitute terminating action for the proposed rule. Or
- For operators that do not incorporate the Revision 3 of the service bulletin, repetitively inspect the installation for chafing or damage of the wire bundle, and for cracked or fractured brackets. The repetitive inspection should be accomplished at intervals not to exceed 18 months, with bracket replacement if any evidence of cracking or damage is found.

The FAA partially agrees with the commenter's proposal, as follows:

We agree with the assessment that the replacement brackets specified in Revision 3 of the service bulletin are adequate to meet the strut vibration environment, and that incorporation of such replacement brackets would eliminate the need for the repetitive inspections and repetitive replacements of the wire support brackets specified in the proposed rule. Therefore, paragraphs (a) and (b) have been combined into paragraph (a) with the repetitive inspections and replacements omitted, and subsequent paragraphs have been re-numbered accordingly. Additionally, the preamble and the cost impact sections of the final rule have been changed.

We do not agree with the commenter's proposal to allow continued use of the existing brackets with repetitive inspections beyond the initial 12-month compliance time. The commenter did not submit adequate justification for allowing the continued use of these brackets, or extending the compliance time for the repetitive inspections from 12 to 18 months. The existing brackets can fail in service, and such failures could result in damage to wiring, ignition of fuel vapors in a flammable leakage zone, or loss of the fuel shutoff valve function. Considering these safety concerns, repetitive inspections without replacement of the wire support brackets after the doing the inspection would not adequately address the identified unsafe condition.

Withdraw Proposed Rule

One commenter asks that the FAA withdraw the proposed rule. The commenter provided in service data showing that airplanes which have replaced the wire support brackets per Boeing Service Bulletin 757–54–0013, Revision 3, have experienced no problems with the brackets. The commenter states that the annual bracket replacement (every 12 months) is not possible or practical because the repetitive bracket replacements would involve repetitive replacement of close tolerance fasteners, and would require repeated oversizing of the existing airplane mounting holes. This could result in the holes being too large for proper installation of the brackets. The commenter adds that a deviation to the proposed rule would be necessary each time the fasteners are replaced.

The FAA concurs with the commenter's assessment that the brackets that were replaced per Revision 3 of the service bulletin are adequate; however, we do not agree with the request to withdraw the proposed rule. Failure to install the replacement brackets per the referenced service bulletin could result in the unsafe conditions stated under the previous section titled ''Revise Paragraph (a).'' Also stated in that section is our intent to omit the repetitive inspections and repetitive bracket replacements specified in paragraph (a) of the proposed rule. Paragraph (a) of the final rule has been revised to require a one-time inspection and one-time replacement of the wire support brackets.

Reduce Compliance Time

One commenter asks that the FAA reduce the proposed compliance time for the initial inspection specified in paragraph (a) of the proposed rule from 12 months to 6 months after the effective date of the AD. The commenter states that 12 months is too long and notes that, based on previous administrative procedures and industry practices, it could be almost 18 months before an airplane is inspected. The commenter adds that this places the traveling public at an elevated risk and greatly reduces the margin of safety on the airplane.

The FAA does not agree. As discussed in the section ''Differences Between Proposed Rule and Service Bulletin'' in the preamble of the proposed rule, we find that a 12-month compliance time for the initial inspection would address the unsafe condition in a timely manner. In developing an appropriate compliance time for the proposed AD, we considered not only the manufacturer's recommendation, but the degree of urgency associated with addressing the subject unsafe condition, the average utilization of the affected fleet, and the time necessary to do the initial inspection/modification.

Operators are always permitted to accomplish the requirements of an AD at a time earlier than that specified as the compliance time; therefore, if an operator wants to do the initial inspection required by paragraph (a) of this AD earlier than 12 months after the effective date of the AD, the operator can do so. Therefore, no change to the compliance time for the initial inspection required by paragraph (a) of the final rule is necessary.

Extend Compliance Time

One commenter states that the proposed 12-month compliance timetable for the bracket replacement is unrealistic and asks that the compliance time be extended to 18 months. The commenter notes that it is currently implementing the modification at its C-check, and requires 18 months to modify its entire fleet. The commenter also states that the manufacturer has quoted a 22-month lead time for obtaining the necessary kits, which is not compatible with the timetable specified in the proposed rule.

The FAA does not agree. As stated above, we find that a 12-month compliance time for the initial inspection/modification is appropriate.

Fuel Shutoff Valve (FSOV)

One commenter notes that the FSOV can be closed using the redundant circuit routed on the front spar, as long as power is available to that circuit. The FAA agrees with the statement and infers that the commenter wants further explanation of the procedures available should this situation occur. This can occur only if the engine fuel cutoff switch is placed in the ''cutoff'' position before the engine fire handle is pulled. The procedural information is described in the Emergency Procedures section of the 757 Airplane Flight Manual.

Conclusion

After careful review of the available data, including the comments noted above, the FAA has determined that air safety and the public interest require the adoption of the rule with the changes previously described. The FAA has determined that these changes will neither increase the economic burden on any operator nor increase the scope of the AD.

Cost Impact

There are approximately 501 airplanes of the affected design in the worldwide fleet. The FAA estimates that 249 airplanes of U.S. registry will be affected by this AD.

It will take approximately 2 work hours to accomplish the required inspection and approximately 6 work hours per airplane to accomplish the required replacement. The average labor rate is estimated to be $60 per work hour. Required parts will cost approximately $525 per airplane. Based on these figures, the cost impact of the AD on U.S. operators is estimated to be $250,245, or $1,005 per airplane.

The cost impact figures discussed above are based on assumptions that no operator has yet accomplished any of the requirements of this AD action, and that no operator would accomplish those actions in the future if this AD were not adopted. The cost impact figures discussed in AD rulemaking actions represent only the time necessary to perform the specific actions actually required by the AD. These figures typically do not include incidental costs, such as the time required to gain access and close up, planning time, or time necessitated by other administrative actions.

Regulatory Impact

The regulations adopted herein will not have a substantial direct effect on the States, on the relationship between the national Government and the States, or on the distribution of power and responsibilities among the various levels of government. Therefore, it is determined that this final rule does not have federalism implications under Executive Order 13132.

For the reasons discussed above, I certify that this action (1) is not a ''significant regulatory action'' under Executive Order 12866; (2) is not a ''significant rule'' under DOT Regulatory Policies and Procedures (44 FR 11034, February 26, 1979); and (3) will not have a significant economic impact, positive or negative, on a substantial number of small entities under the criteria of the Regulatory Flexibility Act. A final evaluation has been prepared for this action and it is contained in the Rules Docket. A copy of it may be obtained from the Rules Docket at the location provided under the caption **ADDRESSES**.

List of Subjects in 14 CFR Part 39

Air transportation, Aircraft, Aviation safety, Incorporation by reference, Safety.

Adoption of the Amendment

Accordingly, pursuant to the authority delegated to me by the Administrator, the Federal Aviation Administration amends part 39 of the Federal Aviation Regulations (14 CFR part 39) as follows:

PART 39—AIRWORTHINESS DIRECTIVES

1. The authority citation for part 39 continues to read as follows:

Authority: 49 U.S.C. 106(g), 40113, 44701.

§ 39.13 [Amended]

2. Section 39.13 is amended by adding the following new airworthiness directive:

2001–13–15 Boeing: Amendment 39–12296. Docket 98–NM–271–AD.

Applicability: Model 757 series airplanes, certificated in any category, equipped with Rolls Royce engines.

Note 1: This AD applies to each airplane identified in the preceding applicability provision, regardless of whether it has been modified, altered, or repaired in the area subject to the requirements of this AD. For airplanes that have been modified, altered, or repaired so that the performance of the requirements of this AD is affected, the owner/operator must request approval for an alternative method of compliance in accordance with paragraph (c) of this AD. The request should include an assessment of the effect of the modification, alteration, or repair on the unsafe condition addressed by this AD; and, if the unsafe condition has not been eliminated, the request should include specific proposed actions to address it.

Compliance: Required as indicated, unless accomplished previously.

To prevent a short circuit that could result in either the possible ignition of fuel vapors in a flammable leakage zone or in the inability to stop the flow of fuel in the event of an engine fire, accomplish the following:

Inspection/Corrective Action

(a) Within 12 months after the effective date of this AD, accomplish paragraphs (a)(1) and (a)(2) of this AD.

(1) Do a one-time detailed visual inspection of the wire bundles that pass through the three wire support brackets located at Power Plant Station (PPS) 278 on each engine strut, to find wire chafing. If any chafing is found, before further flight, repair the wire bundle per the Boeing Standard Wiring Practices Manual, Document D6–54446, Revision 23, dated August 1998.

(2) Replace all three existing wire support brackets located at PPS 278 on each engine strut with new, improved wire support brackets, per Boeing Service Bulletin 757–54–0013, Revision 3, dated October 23, 1997, as revised by Boeing Information Notice 757–54–0013 IN 02, dated April 8, 1999.

Note 2: For the purposes of this AD, a detailed visual inspection is defined as: ''An intensive visual examination of a specific structural area, system, installation or assembly to detect damage, failure, or irregularity. Available lighting is normally supplemented with a direct source of good lighting at intensity deemed appropriate by the inspector. Inspection aids such as mirror, magnifying lenses, etc., may be used. Surface cleaning and elaborate access procedures may be required.''

Spares Paragraph

(b) As of the effective date of this AD, no person shall install a wire support bracket having P/N 287N1112–8, –9, –20, or –21 on any airplane.

Alternative Methods of Compliance

(c) An alternative method of compliance or adjustment of the compliance time that provides an acceptable level of safety may be used if approved by the Manager, Seattle Aircraft Certification Office (ACO), FAA. Operators shall submit their requests through an appropriate FAA Principal Maintenance

Inspector, who may add comments and then send it to the Manager, Seattle ACO.

Note 3: Information concerning the existence of approved alternative methods of compliance with this AD, if any, may be obtained from the Seattle ACO.

Special Flight Permits

(d) Special flight permits may be issued in accordance with sections 21.197 and 21.199 of the Federal Aviation Regulations (14 CFR 21.197 and 21.199) to operate the airplane to a location where the requirements of this AD can be accomplished.

Incorporation by Reference

(e) Except as provide by paragraph (a)(1) of this AD, the actions shall be done in accordance with Boeing Service Bulletin 757–54–0013, Revision 3, dated October 23, 1997, as revised by Boeing Information Notice 757–54–0013 IN 02, dated April 8, 1999. This incorporation by reference was approved by the Director of the Federal Register in accordance with 5 U.S.C. 552(a) and 1 CFR part 51. Copies may be obtained from Boeing Commercial Airplane Group, P.O. Box 3707, Seattle, Washington 98124–2207. Copies may be inspected at the FAA, Transport Airplane Directorate, 1601 Lind Avenue, SW., Renton, Washington; or at the Office of the Federal Register, 800 North Capitol Street, NW., suite 700, Washington, DC.

Effective Date

(f) This amendment becomes effective on August 7, 2001.

Issued in Renton, Washington, on June 21, 2001.

Kalene C. Yanamura,

Acting Manager, Transport Airplane Directorate, Aircraft Certification Service.

[FR Doc. 01–16200 Filed 7–2–01; 8:45 am]

BILLING CODE 4910–13–P

DEPARTMENT OF TRANSPORTATION

Federal Aviation Administration

14 CFR Part 71

[Airspace Docket No. 2001–ASW–08]

Revision of Class E Airspace, Farmington, NM

AGENCY: Federal Aviation Administration (FAA), DOT.

ACTION: Direct final rule; confirmation of effective date.

SUMMARY: This notice confirms the effective date of a direct final rule which revises the Class E Airspace, Farmington, NM.

EFFECTIVE DATE: The direct final rule published at 66 FR 20587 is effective 0901 UTC, September 6, 2001.

FOR FURTHER INFORMATION CONTACT: Donald J. Day, Airspace Branch, Air Traffic Division, Southwest Region, Federal Aviation Administration, Fort Worth, TX 76193–0520, telephone: 817–222–5593.

SUPPLEMENTARY INFORMATION: The FAA published this direct final rule with a request for comments in the **Federal Register** on April 24, 2001, (66 FR 20587). The FAA uses the direct final rulemaking procedure for a noncontroversial rule where the FAA believes that there will be no adverse public comment. This direct final rule advised the public that no adverse comments were anticipated, and that unless a written adverse comment, or a written notice of intent to submit such an adverse comment, were received within the comment period, the regulation would become effective on September 6, 2001. No adverse comments were received, and, thus, this action confirms that this direct final rule will be effective on that date.

Issued in Fort Worth, TX, on June 26, 2001.

Robert N. Stevens,

Acting Manager, Air Traffic Division, Southwest Region.

[FR Doc. 01–16710 Filed 7–2–01; 8:45 am]

BILLING CODE 4910–13–M

DEPARTMENT OF TRANSPORTATION

Coast Guard

33 CFR Part 165

[CGD09–01–044]

RIN 2115–AA97

Safety Zone; Irish Festival 2001, Milwaukee Harbor, WI

AGENCY: Coast Guard, DOT.

ACTION: Temporary final rule.

SUMMARY: The Coast Guard is establishing a temporary safety zone in the Milwaukee Harbor for the Irish Festival 2001 fireworks display. This safety zone is necessary to protect spectators and vessels from the hazards associated with the storage, preparation, and launching of fireworks. This safety zone is intended to restrict vessel traffic from a portion of Milwaukee Harbor, Milwaukee, Wisconsin.

DATES: This temporary rule is effective from 9:20 p.m. until 9:50 p.m. (CST) on August 19, 2001.

ADDRESSES: Comments and material received from the public, as well as documents indicated in this preamble as being available in the docket, are part of docket [CGD09–01–044] and are available for inspection or copying at U.S. Coast Guard Marine Safety Office Milwaukee, 2420 South Lincoln Memorial Drive, Milwaukee, WI 53207 between 7 a.m. and 3:30 p.m., Monday through Friday, except Federal holidays.

FOR FURTHER INFORMATION CONTACT: LCDR Timothy Sickler, Port Operations Chief, Marine Safety Office Milwaukee, 2420 South Lincoln Memorial Drive, Milwaukee, WI 53207. The phone number is (414) 747–7155.

SUPPLEMENTARY INFORMATION:

Regulatory Information

We did not publish a notice of proposed rulemaking (NPRM) for this regulation. Under 5 U.S.C. 553(b)(B), the Coast Guard finds that good cause exists for not publishing an NPRM, and under 5 U.S.C. 553(d)(3), good cause exists for making this rule effective less than 30 days after publication in the **Federal Register**. The permit application did not allow sufficient time for the publication of an NPRM followed by a temporary final rule effective 30 days after publication. Any delay of the effective date of this rule would be contrary to the public interest by exposing the public to the known dangers associated with fireworks displays and the possible loss of life, injury, and damage to property.

Background and Purpose

This safety zone is established to safeguard the public from the hazards associated with the launching of fireworks on the Milwaukee Harbor, Milwaukee, Wisconsin. The size of the zone was determined by using previous experiences with fireworks displays in the Captain of the Port Milwaukee zone and local knowledge about wind, waves, and currents in this particular area.

The safety zone will be in effect on August 19, 2001, from 9:20 p.m. until 9:50 p.m. (CST). The safety zone will encompass all waters bounded by the following coordinates: from the point of origin at 43°02.209′ N, 087°53.714′ W; southeast to 43°02.117′ N, 087°53.417′ W; south to 43°01.767′ N, 087°53.417′ W; southwest to 43°01.555′ N, 087°53.772′ W; then north along the shoreline back to the point of origin.

All persons and vessels shall comply with the instructions of the Captain of the Port Milwaukee or his designated on scene patrol personnel. Entry into, transiting, or anchoring within the safety zone is prohibited unless authorized by the Captain of the Port Milwaukee or his designated on scene representative. The Captain of the Port Milwaukee may be contacted via VHF Channel 16.

Regulatory Evaluation

This rule is not a ''significant regulatory action'' under section 3(f) of

Executive Order 12866, Regulatory Planning and Review, and does not require an assessment of potential costs and benefits under section 6(a)(3) of that Order. The Office of Management and Budget has not reviewed it under that Order. It is not ''significant'' under the regulatory policies and procedures of the Department of Transportation (DOT)(44 FR 11040, February 26, 1979).

Small Entities

Under the Regulatory Flexibility Act (5 U.S.C. 601–612), we considered whether this rule would have a significant economic impact on a substantial number of small entities. The term ''small entities'' comprises small businesses, not-for-profit organizations that are independently owned and operated and are not dominant in their fields, and governmental jurisdictions with populations of less than 50,000.

The Coast Guard certifies under 5 U.S.C. 605(b) that this rule will not have a significant economic impact on a substantial number of small entities.

This rule will affect the following entities: the owners or operators of vessels intending to transit or anchor in the vicinity of Harbor Island in Milwaukee's outer harbor from 9:20 p.m. until 9:50 p.m. (CST) on August 19, 2001.

This safety zone will not have a significant economic impact on a substantial number of small entities for the following reasons: This rule will be in effect for only thirty minutes on one day and late in the day when vessel traffic is minimal. Vessel traffic may enter or transit through the safety zone with the permission of the Captain of the Port Milwaukee or his designated on scene representative. Before the effective period, we will issue maritime advisories widely available to users of the Milwaukee Harbor.

Assistance for Small Entities

Under section 213(a) of the Small Business Regulatory Enforcement Fairness Act of 1996 (Pub. L. 104–121), we offer to assist small entities in understanding the rule so that they can better evaluate its effects on them and participate in the rulemaking process. If the rule would affect your small business, organization, or governmental jurisdiction and you have questions concerning its provisions or options for compliance, please contact Marine Safety Office Milwaukee (See **ADDRESSES.**)

Small businesses may send comments on the actions of Federal employees who enforce, or otherwise determine compliance with, Federal regulations to the Small Business and Agriculture Regulatory Enforcement Ombudsman and the Regional Small Business Regulatory Fairness Boards. The Ombudsman evaluates these actions annually and rates each agency's responsiveness to small business. If you wish to comment on actions by employees of the Coast Guard, call 1–888–REG–FAIR (1–888–734–3247).

Collection of Information

This rule calls for no new collection of information under the Paperwork Reduction Act of 1995 (44 U.S.C. 3501–3520).

Federalism

We have analyzed this rule under Executive Order 13132 and have determined that this rule does not have implications for federalism under that Order.

Unfunded Mandates Reform Act

The Unfunded Mandates Reform Act of 1995 (2 U.S.C. 1531–1538) governs the issuance of Federal regulations that require unfunded mandates. An unfunded mandate is a regulation that requires a State, local, or tribal government or the private sector to incur direct costs without the Federal Government's having first provided the funds to pay those unfunded mandate costs. This rule will not impose an unfunded mandate.

Taking of Private Property

This rule will not effect a taking of private property or otherwise have taking implications under Executive Order 12630, Governmental Actions and Interference with Constitutionally Protected Property Rights.

Civil Justice Reform

This rule meets applicable standards in sections 3(a) and 3(b)(2) of Executive Order 12988, Civil Justice Reform, to minimize litigation, eliminate ambiguity, and reduce burden.

Protection of Children

We have analyzed this rule under Executive Order 13045, Protection of Children from Environmental Health Risks and Safety Risks. This rule is not an economically significant rule and does not concern an environmental risk to health or risk to safety that may disproportionately affect children.

Environment

The Coast Guard considered the environmental impact of this rule and concluded that under figure 2–1, paragraph (34)(g), of Commandant Instruction M16475.lC, this rule is categorically excluded from further environmental documentation.

Indian Tribal Governments

This rule does not have tribal implications under Executive Order 13175, Consultation and Coordination with Indian Tribal Governments, because it does not have a substantial direct effect on one or more Indian tribes, on the relationship between the Federal Government and Indian tribes, or on the distribution of power and responsibilities between the Federal Government and Indian tribes.

Energy Effects

We have analyzed this proposed rule under Executive Order 13211, Actions Concerning Regulations That Significantly Affect Energy Supply, Distribution, or Use. We have determined that it is not a ''significant energy action'' under that order because it is not a ''significant regulatory action'' under Executive Order 12866 and is not likely to have a significant adverse effect on the supply, distribution, or use of energy. It has not been designated by the Administrator of the Office of Information and Regulatory Affairs as a significant energy action. Therefore, it does not require a Statement of Energy Effects under Executive Order 13211.

List of Subjects in 33 CFR Part 165

Harbors, Marine safety, Navigation (water), Reporting and recordkeeping requirements, Security measures, Waterways.

For the reasons discussed in the preamble, the Coast Guard amends 33 CFR part 165 as follows:

PART 165—REGULATED NAVIGATION AREAS AND LIMITED ACCESS AREAS

1. The authority citation for part 165 continues to read as follows:

Authority: 33 U.S.C. 1231; 50 U.S.C. 191, 33 CFR 1.05–1(g), 6.04–1, 6.04–6, 160.5; 49 CFR 1.46.

2. A new temporary § 165.T09–930 is added to read as follows:

§ 165.T09–930 Safety Zone: Milwaukee Harbor, Milwaukee, Wisconsin.

(a) *Location.* All waters of the Milwaukee Harbor encompassed by the following coordinates: from the point of origin at 43°02.209′ N, 087°53.714′ W; southeast to 43°02.117′ N, 087°53.417′ W; south to 43°01.767′ N, 087°53.417′ W; southwest to 43°01.555′ N, 087°53.772′ W; then north along the shoreline back to the point of origin.

(b) *Effective times and dates.* From 9:20 p.m. until 9:50 p.m. (CST) on August 19, 2001.

(c) *Regulations.* (1) The general regulations contained in § 165.23 apply.

(2) All persons and vessels shall comply with the instructions of the Coast Guard Captain of the Port Milwaukee or the designated on scene patrol personnel. Coast Guard patrol personnel include commissioned, warrant or petty officers of the U.S. Coast Guard. Upon being hailed by a U.S. Coast Guard vessel via siren, radio, flashing light, or other means, the operator shall proceed as directed.

(3) This safety zone should not adversely effect shipping. However, commercial vessels may request permission from the Captain of the Port Milwaukee to enter or transit the safety zone. Approval will be made on a case-by-case basis. Requests must be in advance and approved by the Captain of the Port Milwaukee before transits will be authorized. The Captain of the Port Milwaukee may be contacted via U.S. Coast Guard Group Milwaukee on Channel 16, VHF–FM.

Dated: June 6, 2001.

M.R. DeVries,

Commander, U.S. Coast Guard, Captain of the Port, Milwaukee, Milwaukee, Wisconsin.

[FR Doc. 01–16709 Filed 7–2–01; 8:45 am]

BILLING CODE 4910–15–U

DEPARTMENT OF THE INTERIOR

National Park Service

36 CFR Part 51

RIN 1024–AC88

Concession Contracts

AGENCY: National Park Service, Interior.

ACTION: Final rule.

SUMMARY: The National Park Service is amending the language of its concession contracting regulations, promulgated on April 17, 2000 (''Regulations''), to amend those portions of the Regulations that require or may be read as requiring a concessioner to engage in binding arbitration for the final determination of construction costs and the valuation of leasehold surrender interest. The amendment makes binding arbitration optional in the discretion of a concessioner. This amendment assures that the Regulations are in legal conformance with Section 575 of the Administrative Disputes Resolution Act.

DATES: This rule becomes effective July 3, 2001.

FOR FURTHER INFORMATION CONTACT: Cynthia Orlando, Concession Program Manager, National Park Service, 1849 C Street, NW., Room 7313, Washington, DC 20240. Phone (202) 565–1212.

SUPPLEMENTARY INFORMATION: The National Park Service has determined that section 575 of the Administrative Disputes Resolution Act, 5 U.S.C. 575, may preclude the agency from enforcing provisions of its Regulations (36 CFR part 51) and Standard Contract which require, or may be read as requiring, a concessioner to enter into binding arbitration with respect to the final determination of construction costs and the valuation of leasehold surrender interest. Accordingly, the language of the Regulations, promulgated in 65 FR 20630 (April 17, 2000), regarding binding arbitration for (a) the final determination of construction costs, 36 CFR 51.56 and 51.57, is amended to clarify that, unless a concessioner chooses to request binding arbitration, the Director's decision as to construction costs is a final administrative decision; and (b) the valuation of leasehold surrender interest, 36 CFR 51.62, is amended to make binding arbitration as to leasehold surrender interest value an option available only to the concessioner. After the publication of this rule, the National Park Service will amend the language of its Standard Concessions Contract, promulgated in 65 FR 26052 (May 4, 2000) (''Standard Contract''), to reflect these regulatory amendments.

Compliance With Other Laws

Regulatory Planning and Review (Executive Order 12866)

This document is a significant rule and is subject to review by the Office of Management and Budget under Executive Order 12866.

Regulatory Flexibility Act

The Department of the Interior certifies that this document will not have a significant economic effect on a substantial number of small entities under the Regulatory Flexibility Act (5 U.S.C. 601 *et seq.*).

Small Business Regulatory Enforcement Fairness Act (SBREFA)

This rule is not a major rule under 5 U.S.C. 804(2), the Small Business Regulatory Enforcement Fairness Act. This rule:

a. Does not have an annual effect on the economy of $100 million or more.

b. Will not cause a major increase in costs or prices for consumers, individual industries, Federal, State, or local government agencies, or geographic regions.

c. Does not have significant adverse effects on competition, employment, investment, productivity, innovation, or the ability of U.S.-based enterprises to compete with foreign-based enterprises.

Unfunded Mandates Reform Act

This rule does not impose an unfunded mandate on State, local, or tribal governments or the private sector of more than $100 million per year. This rule does not have a significant or unique effect on State, local or tribal governments or the private sector.

Takings (Executive Order 12630)

In accordance with Executive Order 12630, the rule does not have significant takings implications.

Federalism (Executive Order 13132)

In accordance with Executive Order 13132, the rule does not have sufficient federalism implications to warrant the preparation of a Federalism Assessment.

Civil Justice Reform (Executive Order 12988)

In accordance with Executive Order 12988, the Office of the Solicitor has determined that this rule does not unduly burden the judicial system and meets the requirements of sections 3(a) and 3(b)(2) of the Order.

Paperwork Reduction Act

This regulation does not require an information collection from 10 or more parties and a submission under the Paperwork Reduction Act is not required. An OMB Form 83–I is not required.

National Environmental Policy Act

This rule does not constitute a major Federal action significantly affecting the quality of the human environment.

Government-to-Government Relationship With Tribes

In accordance with Executive Order 13175 ''Consultation and Coordination with Indian Tribal Governments'' (65 FR 67249), the President's memorandum of April 29, 1994, ''Government-to-Government Relations with Native American Tribal Governments'' (59 FR 22951) and 512 DM 2, we have evaluated potential effects on federally recognized Indian tribes and have determined that there are no potential effects.

Clarity of This Regulation

Executive Order 12866 requires each agency to write regulations that are easy to understand. We invite your comments on how to make this rule easier to understand, including answers to questions such as the following: (1) Are the requirements in the rule clearly

stated? (2) Does the rule contain technical language or jargon that interferes with its clarity? (3) Does the format of the rule (grouping and order of sections, use of headings, paragraphing, etc.) aid or reduce its clarity? (4) Would the rule be easier to understand if it were divided into more (but shorter) sections? (A ''section'' appears in bold type and is preceded by the symbol ''§ '' and a numbered heading.)

Administrative Procedure Act

Because this revision of the Regulations and Standard Contract is necessary to assure that the Regulations and Standard Contract are in legal conformance with section 575 of the Administrative Disputes Resolution Act, 5 U.S.C. 575, NPS is publishing this revision as a final rule. In accordance with the requirements of the Administrative Procedure Act, 5 U.S.C. 553, we have determined that publishing a proposed rule would be unnecessary and contrary to the public interest. Publishing a proposed rule is unnecessary because it is clear, as a matter of law, that the Regulations and Standard Contract should be amended to ensure that they are not in conflict with the Administrative Disputes Resolution Act. Publishing a proposed rule is also contrary to the public interest because the public is best served by the swift amendment of the Regulations and Standard Contract to assure compliance with the Administrative Disputes Resolution Act. We believe that publishing this rule 30 days before the rule becoming effective would be unnecessary and contrary to the public interest. Therefore, under the Administrative Procedure Act, 5 U.S.C. 553, we have determined that this final rulemaking is excepted from the 30-day delay in the effective date and will therefore become effective on the date published in the **Federal Register**.

List of Subjects in 36 CFR Part 51

Concessions, Government contracts, National parks, Reporting and recordkeeping requirements.

Accordingly, 36 CFR Part 51 is amended as set forth below:

PART 51—CONCESSION CONTRACTS

1. The authority for part 51 continues to read as follows:

Authority: The Act of August 25, 1916, as amended and supplemented, 16 U.S.C. 1 *et seq.*, particularly 16 U.S.C. 3 and Title IV of the National Parks Omnibus Management Act of 1998 (Pub. L. 105–391).

2. Revise § 51.56 to read as follows:

§ 51.56 How will the construction cost for purposes of leasehold surrender interest value be determined?

After receiving the detailed construction report (and certification, if requested), from the concessioner, the Director will review the report, certification and other information as appropriate to determine that the reported construction cost is consistent with the construction cost approved by the Director in advance of the construction and that all costs included in the construction cost are eligible direct or indirect costs as defined in this part. The construction cost determined by the Director will be the final determination of construction cost for purposes of the leasehold surrender interest value in the related capital improvement unless the concessioner requests arbitration of the construction cost under § 51.57. The Director may at any time review a construction cost determination (subject to arbitration under § 51.57) if the Director has reason to believe that it was based on false, misleading or incomplete information.

3. Revise § 51.57 to read as follows:

§ 51.57 How does a concessioner request arbitration of the construction cost of a capital improvement?

If a concessioner requests arbitration of the construction cost of a capital improvement determined by the Director, the request must be made in writing to the Director within 3 months of the date of the Director's determination of construction cost under § 51.56. The arbitration procedures are described in § 51.51. The decision of the arbitration panel as to the construction cost of the capital improvement will be binding on the concessioner and the Director.

4. Revise § 51.62 to read as follows:

§ 51.62 What is the process to determine the leasehold surrender interest value when the concessioner does not seek or is not awarded a new concession contract?

Leasehold surrender interest concession contracts must contain provisions under which the Director and the concessioner will seek to agree in advance of the expiration or other termination of the concession contract as to what the concessioner's leasehold surrender interest value will be on a unit-by-unit basis as of the date of expiration or termination of the concession contract. In the event that agreement cannot be reached, the provisions of the leasehold surrender interest concession contract must provide for the Director to make a final determination of leasehold surrender interest value unless binding arbitration as to the value is requested by the concessioner. The arbitration procedures are described in § 51.51. A prior decision as to the construction cost of capital improvements made by the Director or by an arbitration panel in accordance with this part are final and not subject to further arbitration.

Dated: June 11, 2001.

Joseph E. Doddridge,

Acting Assistant Secretary for Fish and Wildlife and Parks.

[FR Doc. 01–16612 Filed 7–2–01; 8:45 am]

BILLING CODE 4310–70–P

ENVIRONMENTAL PROTECTION AGENCY

40 CFR Part 63

[FRL–6996–7]

Approval of Section 112(l) Authority for Hazardous Air Pollutants; Chemical Accident Prevention Provisions; Risk Management Plans; New Jersey Department of Environmental Protection

AGENCY: Environmental Protection Agency (EPA).

ACTION: Direct final rule.

SUMMARY: This action grants the New Jersey Department of Environmental Protection (NJDEP) the authority to implement and enforce portions of the State of New Jersey's Toxic Catastrophe Prevention Act Program (TCPA), codified at New Jersey Administrative Code (NJAC) 7:31, in place of the Federal Chemical Accident Prevention regulations, promulgated by EPA under section 112(r) of the Clean Air Act (CAA), for all stationary sources with covered processes (''subject sources'') under New Jersey's jurisdiction. New Jersey's regulations will be incorporated by reference as ''New Jersey's Toxic Catastrophe Prevention Act Program'' in the Code of Federal Regulations. Pursuant to section 112(l) of the CAA, NJDEP requested approval to implement and enforce its TCPA rule in place of the Federal Chemical Accident Prevention regulations. NJDEP requested this authority for all subject sources under its jurisdiction except those that are covered only because they contain regulated quantities of LPG gases regulated under the New Jersey Liquified Petroleum Gas Act of 1950 (NJSA 21:1B). The EPA has reviewed this request and has concluded that it satisfies all of the requirements necessary to qualify for approval under section 112(l). With the exceptions noted in section III of the

SUPPLEMENTARY INFORMATION, EPA substitutes the provisions of NJAC 7:31–1.1 through 1.10 and NJAC 7:31–2.1 through 8.2, effective July 20, 1998, for EPA regulations.

DATES: This rule is effective on September 4, 2001 without further notice, unless EPA receives relevant adverse comments by August 2, 2001. If EPA receives such comment, it will publish a timely withdrawal in the **Federal Register** informing the public that this rule will not take effect. The incorporation by reference of certain publications listed in the regulations is approved by the Director of the Federal Register as of September 4, 2001.

ADDRESSES: Written comments should be addressed to: Steven C. Riva, Chief, Permitting Section, Air Programs Branch, U. S. Environmental Protection Agency, Region 2, 290 Broadway, New York, New York 10007–1866, with a copy to Ms. Shirlee Schiffman, Chief, Bureau of Release Prevention, New Jersey Department of Environmental Protection, P.O. Box 422, 401 East State Street, Trenton, New Jersey 08625–0422. Copies of the submitted requests are available for public review at EPA Region 2's office during normal business hours (docket # A–2000–23). Any State responses to comments must be submitted to the Administrator within 30 days of the close of the public comment period.

FOR FURTHER INFORMATION CONTACT: Umesh Dholakia at (212) 637–4023.

SUPPLEMENTARY INFORMATION:

I. Background

The 1990 CAA Amendments added section 112(r) to provide for the prevention and mitigation of accidental chemical releases. Sections 112(r) (3)–(5) mandate that EPA promulgate a list of ''regulated substances'' with threshold quantities. Processes at stationary sources that contain a threshold quantity of a regulated substance are subject to accidental release prevention regulations promulgated under CAA section 112(r)(7). Pursuant to section 112(r)(7), EPA published the list of regulated substances on January 31, 1994 (59 FR 4478), published the risk management program regulations on June 20, 1996 (61 FR 31668), and subsequently amended both sets of regulations several times. These regulations are set forth at 40 CFR part 68.

40 CFR part 68 requires, among other things, that owners and operators of stationary sources with more than a threshold quantity of a regulated substance in a process submit a risk management plan (RMP) by June 21, 1999, to a central location specified by EPA. A RMP must include an Off-site Consequence Analysis (OCA), a prevention program, and an emergency response program.

It should be noted that the Chemical Safety Information, Site Security and Fuels Regulatory Relief Act, Public Law No. 106–40, which was enacted on August 5, 1999, excludes from coverage by the Federal Chemical Accident Prevention regulations any flammable fuel when used as fuel or held for sale as fuel by a retail facility. 40 CFR part 68 was modified to conform with this provision on March 13, 2000 (65 FR 13243). A rule concerning access to OCA information became effective on August 4, 2000 (65 FR 48108).

The regulations at 40 CFR part 68 encourage sources to reduce the probability of accidentally releasing substances that have the potential to cause harm to public health and the environment. Further, the regulations are intended to stimulate dialog between industry and the public on ways to improve accident prevention and emergency response practices. Notwithstanding the emphasis of this program as delegated on risk management planning, owners and operators of stationary sources producing, processing, handling or storing a chemical listed in 40 CFR part 68 or any other extremely hazardous substance are still subject to a general duty to identify hazards and to design and maintain safe facilities as required by section 112(r)(1) of the Act and are subject to such requirements as the Administrator may determine are necessary in the case of an imminent and substantial endangerment pursuant to section 112(r)(9) of the Act. Under section 112(l)(2) of the Act, EPA is required to publish guidance that governs how state, local, and territorial agencies, and Indian tribes as defined in 40 CFR 71.2 (S/L's), may develop and submit, and how we may approve, S/L air toxics rules or programs that meet the goals of the Act and the Federal air toxics program. On November 26, 1993, we finalized regulations that carried out this mandate. (58 FR 62262, Approval of State Programs and Delegation of Federal Authorities, Final Rule). The November 26, 1993 regulations, which can be found in 40 CFR part 63, subpart E, provide regulatory guidance regarding approval of S/L rules or programs that can be implemented and enforced in place of Federal section 112 rules as well as the delegation of our authorities and responsibilities associated with those rules. Final amendments to the November 26, 1993 federal regulations were published on September 14, 2000 (65 FR 55810). Under subpart E, agencies may obtain approval from EPA to implement and enforce provisions of their own air pollution control programs in lieu of federally promulgated NESHAP and other section 112 requirements for stationary sources. Once a state program is approved pursuant to the rule substitution provisions of subpart E, S/L rules and applicable requirements resulting from those rules are considered federally enforceable and substitute for the Federal requirements that would otherwise apply to those stationary sources.

On May 13, 1999, EPA Region 2 received NJDEP's request for delegation of the Federal Chemical Accident Prevention Provisions promulgated under section 112(r) of the CAA and codified at 40 CFR part 68, for all stationary sources with covered processes except those having certain specified flammable liquified petroleum gases (LPG), regulated under the New Jersey Liquified Petroleum Gas Act of 1950 (NJSA 21:1B).

Section 112(l) of the CAA and 40 CFR 63.91, 63.93, and 63.95, authorize EPA, in part, to delegate the authority to implement 112(r)(7) to any state or local agency which submits an approvable program to implement and enforce the section 112(r)(7) requirements, including the Chemical Accident Prevention regulations set forth at 40 CFR part 68. An appropriate plan must contain, among other criteria, the following elements: a demonstration of the state's authority and resources to implement and enforce regulations that are at least as stringent as section 112(r) regulations; procedures that assure EPA's ability to receive, review, and make publicly available RMPs; and procedures for providing technical assistance to subject sources, including small businesses.

II. NJDEP TCPA Rule

New Jersey's TCPA, N.J.S.A. 13:1K–19 *et seq.*, was enacted in 1985 and became effective on January 8, 1986. In 1988, at N.J.A.C. 7:31, the Department adopted rules implementing the TCPA that became effective on June 20, 1988. These rules were readopted with amendments on June 18, 1993, and became effective on July 9, 1993. Following the promulgation of the Federal rules in 40 CFR part 68, NJDEP readopted its TCPA rules on June 18, 1998, to be consistent with the Federal requirements. The structure of the TCPA rules was also revised to conform with the structure of the Federal regulations. The proposal and adoption of these new rules was published in the New Jersey

Register in accordance with New Jersey's Administrative Procedures Act. The amendments, new rules, repeals and modifications became effective July 20, 1998.

New Jersey's TCPA program has the authority and resources to provide technical assistance, review and make publicly available risk management plans, and adequately implement and enforce its TCPA program. During the readoption process, NJDEP supplemented many of the Federal rules with stricter and/or additional requirements to fulfill the mandates of the TCPA or to maintain coverage under the TCPA program at its previous level. Although Federal regulations and the NJDEP's readopted TCPA regulations are similar, there are some differences. Most notably, (1) the Federal rule contains requirements for three program levels, Program 1 having the least stringent requirements, while the readopted TCPA rule eliminates Program 1 and requires all subject sources to meet stricter Program 2 or Program 3 requirements, (2) the TCPA rules will regulate more chemicals and in some cases at a lower threshold than the Federal rules require and, (3) the TCPA requires the subject sources to perform risk assessment to determine any additional risk reduction measures the sources should take.

III. Approval and Delegation

Under CAA section 112(l), EPA may approve S/L rules or programs to be implemented and enforced in place of certain otherwise applicable CAA section 112 Federal rules, emission standards, or requirements. The Federal regulations governing EPA's approval of S/L rules or programs under section 112(l) are located at 40 CFR part 63, subpart E. Under these regulations a S/L has the option to request EPA's approval to substitute a local rule for the applicable Federal rule. Upon approval, the S/L rule will be implemented in place of the counterpart EPA rule and EPA will enforce the state rule in place of the otherwise applicable Federal rule. To receive EPA approval using this option, the requirements of 40 CFR 63.91, 63.93, and 63.95 must be met. In summary, the criteria require that a S/L rule or program: (1) Is ''no less stringent'' than the corresponding Federal rule or program, (2) has adequate legislative authority and resources, (3) has scheduled a timely implementation of the rule, and (4) is otherwise in compliance with Federal guidance.

Based on the review of New Jersey's delegation application, its pertinent laws, rules and regulations, EPA concludes that New Jersey's request satisfies the criteria for approval and substitution in 40 CFR 63.91, 63.93 and 63.95. EPA therefore approves as a direct final rule NJDEP's TCPA rule, effective July 20, 1998, at NJAC 7:31–1.1 through 1.10 and NJAC 7:31–2.1 through 8.2 as equivalent to Federal regulations in 40 CFR part 68 and grants the substitution of the authority to implement and enforce these requirements. The following summarizes the important intents of this delegation.

(1). New Jersey does not intend to regulate and has not sought authority to regulate processes that are covered only because they contain regulated quantities of LPG gases regulated under the New Jersey Liquified Petroleum Gas Act of 1950 (NJSA 21:1B). As previously noted, 40 CFR part 68 was modified on March 13, 2000 to comply with the Chemical Safety Information, Site Security and Fuels Regulatory Relief Act, Public Law No. 106–40, which was enacted on August 5, 1999, and which excludes from coverage by the Federal Chemical Accident Prevention regulations any flammable fuel when used as fuel or held for sale as fuel by a retail facility.

(2). Pursuant to CAA section 112(r)(3), EPA retains the authority to add or delete substances from the list of substances established under section 112(r) and set forth in 40 CFR part 68, subpart F. The additions or deletions are automatically incorporated into the approved state program (see item 5 below).

(3). NJAC 7:31–1.11 and –1.11A refer exclusively to NJDEP authorities and concern matters beyond the scope of 40 CFR part 68. EPA does not approve the fee structure set forth in NJSA 7:31–1.11 and –1.11A for federal enforceability purposes. Rather, the fee structure constitutes part of the demonstration of adequate resources required by 40 CFR sections 63.95(b)(1) and 63.91(d)(3)(iii).

(4). NJAC 7:31–1.12 and subchapters 9, 10, and 11 refer exclusively to NJDEP authorities and, as such, concern matters beyond the scope of 40 CFR part 68.

(5). NJAC 7:31–1.7, insofar as it asserts the Department's authority to rescind, amend or expand these rules, must be read in a manner that is not inconsistent with NJAC 7:31–1.4 (e) or (g). NJAC 7:31–1.4 (e) provides that in the event there are inconsistencies or duplications in requirements incorporated by reference from 40 CFR part 68 and NJAC 7:31, the provisions incorporated by reference from 40 CFR part 68 shall prevail, except where the rules set forth in NJAC 7:31 are more stringent. NJAC 7:31–1.4(g) provides that any future additional subparts of 40 CFR part 68 are incorporated by reference. In addition, NJAC 7:31, subchapters 1–8, which incorporate by reference 40 CFR part 68, subparts A–H, each state that they are incorporating by reference all future amendments and supplements to 40 CFR part 68, except as specifically provided.

(6). NJAC 7:31, subchapter 7, incorporates the federal requirement of 40 CFR Part 68, subpart G, that subject sources must submit Risk Management Plans to EPA in accordance with 40 CFR section 68.150. In taking delegation a state can add state only requirements to those imposed by subpart G but cannot delete or revise the requirements of subpart G.

(7). Among the revisions to 40 CFR part 68 is the addition of more detailed confidentiality provisions to subpart G. The confidentiality provisions of 40 CFR part 68 vary from the requirements of NJAC 7:31–10. The revised part 68 regulations require any source claiming CBI to substantiate that claim at the time the source makes the claim and to provide a public copy, with the confidential material deleted, at the time the source makes the claim. New Jersey's confidentiality provisions, NJAC 7:31–10, which are not substituted for 40 CFR part 68 (see item 5 above), only require the substantiation and the public copy if the Department receives a request for the material or if the Department decides to determine if the material is entitled to confidential treatment. All material submitted to EPA will be subject only to Federal freedom of information and confidentiality requirements.

(8). EPA does not substitute a State's enforcement authority for its own enforcement authority when delegating standards under Clean Air Act section 112(l). In the event it is necessary for EPA to take an enforcement action, EPA may seek the maximum statutorily allowed penalties available under the Clean Air Act ($27,500/day/violation) and apply its own policies regarding settlement. Therefore, EPA does not approve the penalty structure set forth in NJSA 7:31–11 for federal enforceability purposes (see item 4 above). Rather, EPA approves the penalty structure in the rule as meeting the requirements set forth in 40 CFR 63.91(d)(3)(i), which direct that the state demonstrate enforcement authorities that meet the requirements of 40 CFR 70.11. New Jersey's request for approval of the authority to implement and enforce the TCPA rule includes a written statement by the State Attorney General that laws of the State of New

Jersey provide adequate authority for the State to carry out all aspects for the section 112(r) program for which it is seeking delegation, including enforcement action.

As part of its request for approval of the authority to implement and enforce the TCPA rule, NJDEP submitted the criteria for approval required by 40 CFR 63.91(d), 63.93(b) and 63.95. As of the effective date of this action, with the limitations noted above, NJAC 7:31 will substitute for 40 CFR part 68 and will be the federally enforceable standard for subject sources under New Jersey's jurisdiction. This rule will be enforceable by the EPA and citizens under the CAA. Although NJDEP now has the primary implementation and enforcement responsibility for 40 CFR part 68, EPA retains the right, pursuant to CAA section 112(l)(7), to enforce any applicable standards or requirements under the CAA section 112(r) including the authority to seek civil and criminal penalties up to the maximum amounts specified in CAA section 113. While EPA retains the right, pursuant to CAA section 112(l)(7), to enforce any applicable standards or requirements under the CAA section 112(r), EPA finds that compliance with the NJDEP TCPA rule, NJAC 7:31, effective July 20, 1998, will assure compliance with 40 CFR part 68.

IV. Opportunity for Public Comment

EPA is publishing this rule without prior proposal because the Agency views this as a noncontroversial action and anticipates no adverse comments. However, in the Proposed Rules section of this **Federal Register** publication, EPA is publishing a separate document that will serve as the proposal for this action should adverse comments be filed. This rule will become effective September 4, 2001 without further notice unless the Agency receives adverse comments by August 2, 2001.

If EPA receives such comments, then EPA will publish a timely withdrawal in the **Federal Register** informing the public that the rule will not take effect. All public comments received will then be addressed in a subsequent final rule based on the proposed rule. EPA will not institute a second comment period on this rule. Any parties interested in commenting on this rule should do so at this time. If no such comments are received, this rule will become effective on September 4, 2001 and no further action will be taken on the proposed rule.

V. Administrative Requirements

A. Executive Order 12866

The Office of Management and Budget (OMB) has exempted this regulatory action from review under Executive Order 12866, entitled Regulatory Planning and Review.

B. Executive Order 13132 (Federalism)

Executive Order 13132, entitled ''Federalism'' (64 FR 43255, August 10, 1999), requires EPA to develop an accountable process to ensure ''meaningful and timely input by State and local officials in the development of regulatory policies that have federalism implications.'' ''Policies that have federalism implications'' is defined in the Executive Order to include regulations that have ''substantial direct effects on the States, on the relationship between the national government and the States, or on the distribution of power and responsibilities among the various levels of government.''

This direct final rule does not have federalism implications. It will not have substantial direct effects on the States, on the relationship between the national government and the States, or on the distribution of power and responsibilities among the various levels of government, as specified in Executive Order 13132. The State of New Jersey has voluntarily requested delegation of this program. The state will be relying on its own resources to implement and enforce 40 CFR part 68 as described in the summary section of this notice. Thus, Executive Order 13132 does not apply to this rule.

C. Executive Order 13175 (Consultation and Coordination With Indian Tribal Governments)

Executive Order 13175, entitled ''Consultation and Coordination with Indian Tribal Governments'' (65 FR 67249, November 6, 2000), requires EPA to develop an accountable process to ensure ''meaningful and timely input by tribal officials in the development of regulatory policies that have tribal implications.'' ''Policies that have tribal implications'' is defined in the Executive Order to include regulations that have ''substantial direct effects on one or more Indian tribes, on the relationship between the Federal government and the Indian tribes, or on the distribution of power and responsibilities between the Federal government and Indian tribes.''

This direct final rule does not have tribal implications. It will not have substantial direct effects on tribal governments, on the relationship between the Federal government and Indian tribes, or on the distribution of power and responsibilities between the Federal government and Indian tribes, as specified in Executive Order 13175. The State of New Jersey has voluntarily requested delegation of this program. The state will be implementing and enforcing its own requirements, which have been reviewed and approved by EPA. Thus, Executive Order 13175 does not apply to this rule.

D. Paperwork Reduction Act

Under the Paperwork Reduction Act, 44 U.S.C. 3501 *et seq.*, the EPA must consider the paperwork burden imposed by any information collection request in a proposed or final rule. This rule will not impose any new information collection requirements. EPA has already satisfied the requirements under the Paperwork Reduction Act to collect information needed to meet the federal requirements through OMB Control No. 2050–0144. 64 FR 69636.

E. Regulatory Flexibility Act

The Regulatory Flexibility Act (RFA, Public Law 96–354, September 19, 1980) requires Federal agencies to give special consideration to the impact of regulation on small businesses. The RFA specifies that a regulatory flexibility analysis must be prepared if a screening analysis indicates a regulation will have significant impact on a substantial number of small entities. This rule will not have a significant economic impact on a substantial number of small entities.

F. Unfunded Mandates

Under section 202 of the Unfunded Mandates Reform Act of 1995 requires that the Agency prepare a budgetary impact statement before promulgating a rule that includes a Federal mandate that may result in estimated costs of $100 million or more in one year to either State, local, or tribal governments in the aggregate, or to the private sector. Under section 205, EPA must select the most cost effective and least burdensome alternative that achieves the objective of the rule and is consistent with statutory requirements. Section 203 requires EPA to establish a plan for informing, educating and advising any small governments that may be significantly impacted by the rule. EPA has estimated that this rule does not include a Federal mandate that may result in estimated costs of $100 million or more to either State, local, or tribal governments in the aggregate, or to the private sector. This Federal action approves pre-existing requirements under State or local law, and imposes no new requirements.

G. National Technology Transfer and Advancement Act

Section 12(d) of the National Technology Transfer and Advancement Act of 1995 (''NTTAA''), Public Law 104–113, section 12(d) (15 U.S.C. 272 note) directs EPA to use voluntary consensus standards in its regulatory activities unless to do so would be inconsistent with applicable law or otherwise impractical. Voluntary consensus standards are technical standards (e.g., materials specifications, test methods, sampling procedures, and business practices) that are developed or adopted by voluntary consensus standards bodies. The NTTAA directs EPA to provide Congress, through OMB, explanations when the Agency decides not to use available and applicable voluntary consensus standards. This proposed rulemaking does not involve technical standards. Therefore, EPA is not considering the use of any voluntary consensus standards.

H. Executive Order 13045

Protection of Children from Environmental Health Risks and Safety Risks (62 FR 19885, April 23, 1997), applies to any rule that: (1) is determined to be ''economically significant'' as defined under Executive Order 12866, and (2) concerns an environmental health or safety risk that EPA has reason to believe may have a disproportionate effect on children. If the regulatory action meets both criteria, the Agency must evaluate the environmental health or safety effects of the planned rule on children, and explain why the planned regulation is preferable to other potentially effective and reasonably feasible alternatives considered by the Agency. This rule is not subject to Executive Order 13045 because it is not an economically significant rule as defined by Executive Order 12866, and because it does not involve decisions based on environmental health or safety risks.

I. Submission to Congress and the Comptroller General

The Congressional Review Act, 5 U.S.C. 801 *et seq.*, as added by the Small Business Regulatory Enforcement Fairness Act of 1996, generally provides that before a rule may take effect, the agency promulgating the rule must submit a rule report, which includes a copy of this rule, to each House of the Congress and to the Comptroller General of the United States. EPA will submit a report containing this rule and other required information to the U.S. Senate, the U.S. House of Representatives, and the Comptroller General of the United States prior to publication of the rule in the **Federal Register**. This rule is not a ''major'' rule as defined by 5 U.S.C. 804(2).

List of Subjects in 40 CFR Part 63

Environmental protection, Administrative practice and procedure, Air pollution control, Chemical accident prevention, Hazardous substances, Incorporation by reference, Intergovernmental relations, Reporting and recordkeeping requirements.

Authority: This action is issued under the authority of section 112 of the Clean Air Act, as amended, 42 U.S.C. 7412.

Dated: May 25, 2001.

Kathleen C. Callahan,

Acting Regional Administrator, Region 2.

Part 63, chapter I, title 40 of the Code of Federal Regulations is amended as follows:

PART 63—[AMENDED]

1. The authority citation for part 63 continues to read as follows:

Authority: 42 U.S.C. 7401 *et seq.*

Subpart A—General Provisions

2. Section 63.14 is amended by revising paragraph (d)(2) to read as follows:

§ 63.14 Incorporations by reference.

* * *

(d) * * *

(2) New Jersey's *Toxic Catastrophe Prevention Act Program*, (July 20, 1998), Incorporation By Reference approved for § 63.99 (a)(30)(i) of subpart E of this part.

* * *

Subpart E—Approval of State Programs and Delegation of Federal Authorities

3. Section 63.99 is amended by adding a new paragraph (a)(30) to read as follows:

§ 63.99 Delegated Federal authorities.

(a) * * *

(30) New Jersey

(i) Affected sources must comply with the Toxic Catastrophe Prevention Act Program (TCPA), (July 20, 1998), (incorporated by reference as specified in § 63.14) as described in paragraph (a)(30)(i)(A) of this section:

(A) Except for authorities identified as not being delegated, the regulations incorporated in New Jersey's ''Toxic Catastrophe Prevention Act Program,'' Title 7, Chapter 31, of the New Jersey Administrative Code: Subchapter 1, ''General Provisions'' (sections 1.1 to 1.10 except for the definition of ''What if Checklist''), Subchapter 2, ''Hazard Assessment,'' Subchapter 3, ''Minimum Requirements for a Program 2 TCPA Risk Management Program,'' Subchapter 4, ''Minimum Requirements for a Program 3 TCPA Risk Management Program,'' Subchapter 5, ''Emergency Response,'' Subchapter 6, ''Extraordinarily Hazardous Substances,'' Subchapter 7, ''Risk Management Plan and TCPA Submission,'' and Subchapter 8, ''Other Federal Requirements,'' (effective July 20, 1998), pertain to the sources affected by 40 CFR part 68 and have been approved under the procedures in §§ 63.91, 63.93 and 63.95 to be implemented and enforced in place of 40 CFR part 68, Subparts A through H, as may be amended.

(*1*) Authorities not delegated:

(*i*) The New Jersey Department of Environmental Protection is not delegated the Administrator's authority to implement and enforce New Jersey's Toxic Catastrophe Prevention Act Program, Title 7, Chapter 31, of the New Jersey Administrative Code, in lieu of the provisions of 40 CFR part 68 as they apply to the regulation of processes that are covered only because they contain regulated quantities of liquid petroleum gases (LPG) regulated under the New Jersey Liquified Petroleum Gas Act of 1950 (N.J.S.A. 21:1B),

(*ii*) Pursuant to § 63.90(c) the New Jersey Department of Environmental Protection is not delegated the Administrator's authority to add or delete substances from the list of substances established under section 112(r) and set forth in 40 CFR 68.130.

[FR Doc. 01–16561 Filed 7–2–01; 8:45 am]

BILLING CODE 6560–50–P

ENVIRONMENTAL PROTECTION AGENCY

40 CFR Parts 63 and 264

[FRL–7001–8]

RIN 2050

NESHAP: Standards for Hazardous Air Pollutants for Hazardous Waste Combustors

AGENCY: Environmental Protection Agency (EPA).

ACTION: Direct final rule.

SUMMARY: EPA is taking direct final action on targeted amendments to the regulations for hazardous waste burning cement kilns, lightweight aggregate kilns, and incinerators promulgated on September 30, 1999 (NESHAP: Final

Standards for Hazardous Air Pollutants for Hazardous Waste Combustors). The revisions make improvements to the implementation of the emission standards, primarily in the areas of compliance, testing and monitoring. We are approving these revisions to make it easier to comply with the September 30, 1999 final rule.

DATES: This rule is effective on October 16, 2001 without further notice, unless EPA receives adverse comment by August 17, 2001. If we receive such comment, we will publish a timely withdrawal in the **Federal Register** informing the public that this rule will not take effect.

ADDRESSES: If you wish to comment on this direct final rule, you must send an original and two copies of the comments referencing Docket Number F–2001–RC4F–FFFFF to: RCRA Information Center (RIC), Office of Solid Waste (5305G), U.S. Environmental Protection Agency Headquarters (EPA HQ), Ariel Rios Building, 1200 Pennsylvania Avenue, NW., Washington, DC 20460–0002; or, if using special delivery, such as overnight express service: RIC, Crystal Gateway One, 1235 Jefferson Davis Highway, First Floor, Arlington, VA 22202. You may also submit comments electronically following the directions in the ''Supplementary Information'' section below.

FOR FURTHER INFORMATION CONTACT: For general information, call the RCRA Call Center at 1–800–424–9346 or TDD 1–800–553–7672 (hearing impaired). Callers within the Washington Metropolitan Area must dial 703–412–9810 or TDD 703–412–3323 (hearing impaired). The RCRA Call Center is open Monday–Friday, 9 am to 4 pm, Eastern Standard Time. For more information on specific aspects of the NESHAP portion of this direct final rule, contact Mr. Frank Behan at 703–308–8476, *behan.frank@epa.gov,* or write him at the Office of Solid Waste, 5302W, U.S. EPA, Ariel Rios Building, 1200 Pennsylvania Avenue, NW., Washington, DC 20460.

SUPPLEMENTARY INFORMATION: EPA is publishing this rule without prior proposal because we view these as noncontroversial amendments. We anticipate no adverse comment because we have worked with the interested parties in their development. However, in the ''Proposed Rules'' section of today's **Federal Register** publication, we are publishing a separate document that will serve as the proposal to amend the emissions standards for hazardous waste burning cement kilns, lightweight aggregate kilns, and incinerators promulgated on September 30, 1999, if adverse comments are filed. This direct final rule will be effective on October 16, 2001 without further notice unless we receive adverse comment by August 17, 2001. If EPA receives adverse comment on one or more distinct amendments of this rulemaking, we will publish a timely withdrawal in the **Federal Register** indicating which provisions will become effective and which provisions are being withdrawn due to adverse comment. Any of the distinct amendments in today's rulemaking for which we do not receive adverse comment will become effective on the date set above. We will address all public comments in a subsequent final rule based on the proposed rule, including any adverse comment on any distinct amendment, paragraph, or section of today's rule. We will not institute a second comment period on this action. Any parties interested in commenting on any amendment must do so at this time.

Electronic Submittal of Comments

You may submit comments electronically by sending electronic mail through the Internet to: *rcra-docket@epamail.epa.gov.* You should identify comments in electronic format with the docket number F–2001–RC4F–FFFFF. You must submit all electronic comments as an ASCII (text) file, avoiding the use of special characters or any type of encryption. The official record for this action will be kept in the paper form. Accordingly, we will transfer all comments received electronically into paper form and place them in the official record which will also include all comments submitted directly in writing. The official record is the paper record maintained at the RIC as described above. We may seek clarification of electronic comments that are garbled in transmission or during conversion to paper form.

You should not electronically submit any confidential business information (CBI). You must submit an original and two copies of CBI under separate cover to: RCRA CBI Document Control Officer, Office of Solid Waste (5305W), U.S. EPA, Ariel Rios Building, 1200 Pennsylvania Avenue, NW., Washington, DC 20460.

Acronyms Used in the Rule

BIF—Boilers and industrial furnaces
CAA—Clean Air Act
CEMS—Continuous emissions monitors/monitoring system
CFR—Code of Federal Regulations
DOC—Documentation of Compliance
DRE—Destruction and removal efficiency
dscf—Dry standard cubic feet
dscm—Dry standard cubic meter
EPA/USEPA—United States Environmental Protection Agency
gr—Grains
HAP—Hazardous air pollutant
HWC—Hazardous waste combustor
MACT—Maximum Achievable Control Technology
MTEC—Maximum theoretical emissions concentration
NESHAP—National Emission Standards for Hazardous Air Pollutants
NIC—Notice of Intent to Comply
NOC—Notification of compliance
NODA—Notice of data availability
OPL—Operating parameter limit
PM—Particulate matter
POHC—Principal organic hazardous constituent
ppmv—Parts per million by volume
RCRA—Resource Conservation and Recovery Act
SVM—Semivolatile metals (lead and cadmium)
µg—Microgram

Table of Contents

Part One: Overview and Background for This Direct Final Rule

I. What Is the Purpose of This Direct Final Rule?
II. What Is the Phase I Rule?
III. What Related Actions Have Been Taken Since Publication of the Phase I Rule?

Part Two: NESHAP—Amendments to the HWC Final Rule

I. Hazardous Waste Residence Time
II. Deletion of One-Time Notification of Compliance with Alternative Clean Air Act Standards
III. Use of DRE Data in Lieu of Testing
IV. Time Extension for Waiving PM and Opacity Standards to Correlate PM CEMS
V. Alternative Hydrocarbon Monitoring Location for Short Cement Kilns Burning Hazardous Waste at Locations Other Than the ''Hot'' End of the Kiln
VI. Alternative to the Particulate Matter Standard for Incinerators Feeding Low Levels of Metals
VII. Deletion of Baghouse Inspection Requirements
VIII. Feedstream Analysis for Organic HAPs
IX. Revisions to the Metals Feedrate Extrapolation Procedures
X. Feedrate Limits for Undetectable Constituents
XI. Revisions to Assist Early Compliance
XII. Accuracy Requirements for Weight Measurement Devices
XIII. Deletion of Requirement for Establishing a Scrubber Liquid Minimum pH Operating Parameter Limit for Mercury Control for Wet Scrubbers

Part Three: Analytical and Regulatory Requirements

I. Executive Order 12866
II. Regulatory Flexibility Act (RFA), as Amended by the Small Business Regulatory Enforcement Fairness Act of 1996 (SBREFA), 5 U.S.C. 601 et. seq.

III. Executive Order 13045: ''Protection of Children from Environmental Health Risks and Safety Risks''
IV. Environmental Justice Executive Order 12898
V. Unfunded Mandates Reform Act
VI. Executive Order 13132 (Federalism)
VII. Consultation with Tribal Governments
VIII. Paperwork Reduction Act
IX. National Technology Transfer and Advancement Act of 1995
X. The Congressional Review Act (5 U.S.C. 801 *et seq.*, as Added by the Small Business Regulatory Enforcement Fairness Act of 1996)

Part Four: State Authority

Part One: Overview and Background for This Direct Final Rule

I. What Is the Purpose of This Direct Final Rule?

Today's notice makes specific changes to the NESHAP: Final Standards for Hazardous Air Pollutants for Hazardous Waste Combustors (Phase I) rule, published September 30, 1999 (64 FR 52828). After promulgation, commenters (primarily the regulated community) raised numerous potential issues through informal comments and during litigation settlement discussions. After considering the issues raised, we have decided to promulgate a limited number of changes to the final rule, most of them relating to compliance and implementation.

In a separate action today, we are proposing and soliciting comment on several additional amendments to the Phase I rule. If you wish to comment on those amendments, you must submit comments following the directions in the **ADDRESSES** section of that action.

The remaining sections of this part provide additional background information on the Phase I final rule.

II. What Is the Phase I Rule?

In the Phase I final rule, we adopted National Emissions Standards for Hazardous Air Pollutants to control toxic emissions from the burning of hazardous waste in incinerators, cement kilns, and lightweight aggregate kilns. These emission standards created a technology-based national cap for hazardous air pollutant emissions from the combustion of hazardous waste in these devices. Additional risk-based conditions necessary to protect human health and the environment may be imposed (assuming a proper, site-specific justification) under section 3005(c)(3) of the Resource Conservation and Recovery Act (RCRA).

Section 112 of the Clean Air Act (CAA) requires emissions standards for hazardous air pollutants to be based on the performance of the Maximum Achievable Control Technology (MACT). These standards apply to the three major categories of hazardous waste burners—incinerators, cement kilns, and lightweight aggregate kilns. For purposes of today's notice, we refer to these three categories collectively as hazardous waste combustors (HWC). Hazardous waste combustors burn about 80% of the hazardous waste combusted annually within the United States. The Phase I HWC MACT standards are expected to achieve significant reductions in the amount of hazardous air pollutants being emitted each year.

Additionally, the Phase I HWC MACT rule satisfies our obligation under RCRA (the main statute regulating hazardous waste management) to ensure that hazardous waste combustion is conducted in a manner protective of human health and the environment. By using both CAA and RCRA authorities in a harmonized fashion, we consolidate regulatory control of hazardous waste combustion into a single set of regulations, thereby minimizing the potential for conflicting or duplicative federal requirements.

More information on the Phase I HWC MACT rule is available electronically from the World Wide Web at *www.epa.gov/hwcmact.*

III. What Related Actions Have Been Taken Since Publication of the Phase I Rule?

On November 19, 1999, we issued a technical correction to the Phase I HWC MACT final rule (64 FR 63209). It clarified our intent with respect to certain aspects of the Notification of Intent to Comply and Progress Report requirements of the 1998 ''Fast Track'' final rule (63 FR 33783). Additionally, specific to the Phase I HWC MACT final rule, we corrected several typographical errors and omissions.

On July 10, 2000, we issued a second technical correction to the Phase I HWC MACT final rule (65 FR 42292). This action corrected additional typographical errors and clarified several issues to make the Phase I rule easier to understand and implement. This action also supplied one omission from the technical correction published on November 19, 1999, and made one correction to the related June 19, 1998 ''Fast Track'' final rule (63 FR 33783).

On July 25, 2000, the Court of Appeals for the District of Columbia decided *Chemical Manufacturers Association* v. *EPA,* 217 F. 3d 861 (D.C. Cir. No. 99–1236). The court held that EPA had the legal authority to promulgate a requirement of early cessation of hazardous waste burning activity for those sources not intending to comply with the MACT emission standards. However, the court also held that we had not adequately explained our reasons for imposing the early cessation requirement. As a result, the court vacated the early cessation requirement and the related Notice of Intent to Comply (NIC) and Progress Report requirements. This vacature took effect on October 11, 2000. Since the requirements were not vacated until after sources were required to submit their NICs (on October 2, 2000), we determined that the court's action does not impact a source's ability to request a RCRA permit modification using the streamlined procedures of 40 CFR 270.42(j)(1). As long as a source complied with the NIC provisions (including filing the NIC before the provision was vacated), the source has met the requirements in 40 CFR 270.42(j)(1) and is therefore eligible for the streamlined RCRA permit modification process. The court's decision does not impact the emission standards or compliance schedule for the other requirements of the HWC NESHAP Subpart EEE.

On November 9, 2000, we issued a third technical correction to the Phase I HWC MACT final rule (65 FR 67268). It clarified our intent with respect to the applicability of new source versus existing source standards for hazardous waste incinerators. This action also clarified three issues to make the Phase I rule easier to understand and implement.

On May 14, 2001, we issued a final rule implementing two court orders that removed affected provisions of the Phase I HWC MACT final rule from the Code of Federal Regulations (66 FR 24270). This action removed the Notice of Intent to Comply provisions (discussed above) and certain operating parameter limits of baghouses and electrostatic precipitators.

Part Two: NESHAP—Amendments to the HWC Final Rule

I. Hazardous Waste Residence Time

''Hazardous waste residence time'' is defined at § 63.1201(a) as the time elapsed from cutoff of the flow of hazardous waste into the combustor (including, for example, the time required for liquids to flow from the cutoff valve into the combustor) until solid, liquid, and gaseous materials from the hazardous waste, excluding residues that may adhere to combustion chamber surfaces, exit the combustion chamber. As stakeholders recognize, hazardous waste residence time has significant regulatory and enforcement implications. For example, if sources

were to exceed an operating requirement or emission standard after the hazardous waste residence time has expired, it is not a violation if the exceedance occurred because of a start-up, shut-down, or malfunction and sources follow the procedures and corrective measures prescribed in the start-up, shut-down, and malfunction plan. In addition, after the hazardous waste residence time has expired, sources may elect to comply with emission standards the Agency has promulgated under sections 112 and 129 of the Clean Air Act for source categories that do not burn hazardous waste. They would comply with these standards in lieu of the hazardous waste combustor standards of Subpart EEE, Part 63. See § 63.1206(b)(1).

Since promulgation of the hazardous waste combustor rule, stakeholders have raised an issue: what is the hazardous waste residence time for sources that continuously recycle hazardous waste-derived materials?

We are taking direct final action so that recycled hazardous waste-derived materials should not be considered when calculating hazardous waste residence time.[1] See revision to the definition of hazardous waste residence time at § 63.1201(a).

A. What Causes Recycle Loops and What Is the Potential Consequence?

Cement kilns, and possibly other hazardous waste combustors, continuously volatilize and condense toxic constituents derived from hazardous waste in recycle loops within the kiln. For example, chlorine and semivolatile metal hazardous air pollutants, such as lead and cadmium, will volatilize in the kiln and partition to the combustion gas. A portion of these waste-derived, toxic materials will condense before the combustion gas exits the kiln and will partition back into the raw material bed. Thus, these waste-derived, toxic materials are recycled internally within the kiln.

In addition, cement kilns generally recycle a portion of their collected particulate matter, known as cement kiln dust, back into the kiln. This cement kiln dust contains toxic constituents derived from hazardous waste fuel, including metals that are hazardous air pollutants.

Stakeholders request that these recycle loops not be considered when calculating hazardous waste residence time. Stakeholders note that if the hazardous waste-derived materials in these recycle loops were to be considered in calculating residence time, then: (1) It would be very problematic to document when the recycled waste constituents finally exit the kiln; and (2) the hazardous waste residence time would not elapse for an unnecessarily protracted period of time.

B. How Are We Addressing This Issue?

We conclude that recycle loops need not be considered in calculating hazardous waste residence time to ensure compliance with the emission standards. Emissions of semivolatile metals, low volatile metals, and particulate matter immediately prior to a waste feed cutoff will typically be well below levels demonstrated during the performance test and thus below the emission standard. This is because sources typically spike metals (add extra metals to the waste fuel) during performance testing to establish a wide envelope of operating limits to reflect the maximum operating variability they are likely to encounter in actual operation, providing sufficient operating flexibility for unexpected situations. We do not believe, though, that conditions will invariably reflect this maximum variability before a waste feed cutoff. In addition, notwithstanding recycle loops, hazardous waste-derived metals emissions will begin to decrease upon waste feed cutoff. The levels will continue to decrease while the hazardous waste residence time elapses and will decrease to very low levels after the electrostatic precipitator or baghouse undergoes a cleaning cycle. Therefore, the metal emission standards should not be exceeded due to recycle loops containing hazardous waste-derived materials.

For these reasons, we are revising the definition of hazardous waste residence time at § 63.1201(a).

II. Deletion of One-Time Notification of Compliance With Alternative Clean Air Act Standards

If a source is not feeding hazardous waste and the hazardous waste residence time has expired, the source may elect to comply temporarily with alternative, otherwise applicable standards promulgated under the authority of sections 112 and 129 of the Clean Air Act. If a source makes this election, § 63.1206(b)(1)(ii)(A) currently requires the source to submit to the Administrator a written, one-time notification documenting compliance with those requirements and standards.

The rule requires this notice to alert regulatory officials that a source claims to have met the regulatory requirements for the otherwise applicable standards (i.e., section 112 and 129 standards the source would be subject to if the source did not burn hazardous waste). For example, a hazardous waste burning cement kiln may elect to comply with the MACT standards and operating requirements applicable to Portland cement manufacturing facilities provided under Subpart LLL after the hazardous waste residence time has transpired. The notice enables regulatory officials to know which sources claim to be in full compliance with such otherwise applicable standards and will assist those officials in establishing source inspection priorities.

Stakeholders have raised two issues since promulgation, however, that have led us to conclude that this notification requirement is unnecessary. First, stakeholders have indicated that virtually all sources are likely to want to have the option to switch temporarily to compliance under otherwise applicable section 112 or 129 standards at some point during their operations. Thus, the notice would not have the intended effect of singling out those sources that chose to do so for the purpose of establishing inspection priorities.

Stakeholders also point out that this notification requirement is duplicative of the title V compliance certification requirement of § 70.5(c)(9) that requires permit applicants to include in their application a detailed description of the source's compliance status and a certification by a responsible official of compliance with all applicable requirements. In addition, stakeholders state that title V sources must submit annual certifications of compliance with all applicable requirements. See § 70.6(c)(5). Thus, stakeholders note that the only scenario where the § 63.1206(b)(1)(ii)(A) notification requirement is not duplicative is for sources that have not yet been required to submit a certification under title V.

In addition, if sources anticipate complying temporarily with the alternative standards for nonhazardous waste combustors after the hazardous waste residence time has expired, sources may include appropriate terms and conditions in the title V permit using the ''reasonably anticipated operating scenario'' provisions of

[1] Another special case for addressing residence time is vitrification melter units, where certain inorganic waste components are incorporated into the vitrified melt, and where it is not desirable to remove the entire melt (i.e., the melt is removed from the chamber at lengthy, infrequent intervals). In these cases, it may be appropriate for sources to recommend an alternative ''effective waste treatment'' residence time under § 63.1209(g)(1).

§ 70.6(a)(9).[2] Once both scenarios (i.e., for burning hazardous waste and not burning hazardous waste) are included in the permit, sources simply document in the operating record when they switch from one scenario to another.

Finally, we also note that this notification requirement has been targeted for deletion under the Office of Solid Waste Burden Reduction Project. *See* 64 FR 32859 for the goals and objectives of this project.

For these reasons, we are deleting the notification requirement of § 63.1206(b)(1)(ii)(A).

III. Use of DRE Data in Lieu of Testing

We are revising two provisions associated with the allowance to use previously collected data in lieu of the initial performance test or the Destruction and Removal Efficiency (DRE) test under §§ 63.1206(b)(6), 63.1206(b)(7), and 63.1207(c)(2). We are taking final action to: (1) Remove the existing restriction preventing the use of DRE test data collected prior to March 1998 to document compliance with the DRE standard [3]; and (2) eliminate the requirement limiting previous data to only RCRA permit issuance or reissuance testing results.

A. Why Are We Allowing DRE Data Obtained Prior to March 1998 To Be Used in Lieu of a New DRE Test?

Stakeholders question why the rule restricts the age of DRE data for sources required to conduct only one DRE test for the life of the source. For DRE testing, the rule states that if you fire hazardous waste in the flame zone, and the system is not modified, then you are only required to demonstrate compliance with the MACT DRE emissions standard once over the operational life of the device. However, as part of the final rule data in lieu provisions, we limit the use of previous test data submitted for the initial comprehensive performance test to data collected after March 1998. Stakeholders believe that this limit substantially reduces the number of sources that can submit previous DRE test data in lieu of conducting an additional DRE test. They say that most sources conducted their RCRA trial burns before March 1998 and therefore would be ineligible to submit these tests. Stakeholders point out that if a one-time test is sufficient for the life of the source, then we should not place a limit on previous RCRA data. We agree with this logic and are revising the rule today to require testing only for those sources that are modified or that fire at a location other than the flame zone.

B. Why Are We Allowing the Use of Data Obtained for Purposes Other Than RCRA Permit Issuance or Reissuance?

Stakeholders also express concern about the restrictions the rule places on the type of data that can substitute for a MACT performance test. The rule now stipulates that only data collected for the purpose of RCRA permit issuance or re-issuance can be submitted as in lieu data. Our primary concern with in lieu data submittals is to ensure data quality. Upon reevaluation, we believe data that is not associated with RCRA permit issuance or re-issuance can be reviewed by the regulatory authority to determine whether they are suitable for demonstrating compliance with the DRE standard and for setting MACT operating limits. We now understand that several sources engage in other types of CAA performance testing with oversight and quality assurance requirements comparable to RCRA testing. This modification will allow sources to coordinate CAA and RCRA testing that may facilitate early compliance. In today's direct final rule, we are modifying the current data in lieu provisions to allow sources to submit any test data in lieu of conducting a MACT performance test provided that the data meet our quality assurance requirements (except for DRE, as discussed above). We emphasize that a data in lieu of request must provide adequate quality assurance and quality control documentation. In most cases, tests conducted without significant regulatory oversight (and particularly without a reasonable opportunity for significant oversight) would not be considered to be of sufficiently known quality for use as data in lieu of testing.

For these reasons, we are revising the requirements of §§ 63.1206(b)(6), 63.1206(b)(7), and 63.1207(c)(2).

IV. Time Extension for Waiving PM and Opacity Standards To Correlate PM CEMS

For facilities voluntarily using a particulate matter (PM) continuous emissions monitoring system (CEMS), the final rule allows the particulate matter standard and operating parameter limits used to ensure compliance with that standard to be waived for up to a 96-hour period during a PM CEMS correlation test. (*See* 64 FR 53046). This waiver period is necessary because PM CEMS outputs must be correlated to manual method results and during this time it is sometimes necessary to exceed the applicable operating parameter limits to produce an accurate correlation. The correlation is most accurate over the range of particulate matter emissions tested, so correlation tests should be performed over the full range of expected particulate matter emissions for the particular facility. We determined that allowing a facility to operate above the particulate matter standard for a 96-hour period is reasonable because this is a sufficient amount of time to: (1) Increase emissions to the desired level and reach system equilibrium; (2) perform correlation tests at the equilibrium condition; (3) return to normal equipment settings indicative of compliance with emissions standards and operating parameter limits; and (4) achieve equilibrium at normal conditions. (64 FR 52929).

Stakeholders contend that 96 hours may be too short of a time period to fulfill the testing requirements and that the regulations should allow for a longer time period. From the limited information available on the time required for PM CEMS correlation, they believe that 96 hours may be insufficient to complete the testing, particularly for HWCs that burn a variety of solid wastes. Petitioners suggest we change this provision to allow periods longer than 96 hours with the Administrator's approval.

In a March 2, 2000 letter to EPA, stakeholders describe the time necessary to complete PM CEMS correlation tests at an Eli Lilly incinerator as an indication of the need for additional time beyond the existing 96 hours. In Phase II of Eli Lilly's CEMS tests, Eli Lilly needed approximately 54 hours to achieve a successful correlation (Eli Lilly collected 34 data points requiring approximately three hours per data point above the particulate matter standard). This 54 hours only represented the testing time and did not include pre-and post-testing adjustments or the time before and after the tests when the incinerator was reaching equilibrium. The petitioners also point out that Eli Lilly had personnel with extensive experience in adjusting their incinerator to achieve desired HWC MACT particulate matter concentrations. Facilities with personnel who do not have this experience will go through a lengthy learning process and may need even more time. Therefore, stakeholders believe the current 96-hour allowance is not adequate to correlate a PM CEMS device in an accurate manner.

[2] Note that Subpart EEE incorporates this provision as § 63.1209(q), operating under different modes of operation.

[3] If hazardous waste is fed at a location other than the normal flame zone, sources must conduct periodic DRE testing. See § 63.1206(b)(7)(ii).

Based on the Eli Lilly experience and discussions with PM CEMS testing personnel, we agree that the 96-hour period may not be sufficient for hazardous waste combustors to correlate their PM CEMS. Furthermore, we do not want a 96-hour time limit to be a disincentive to use of PM CEMS. We conclude a site specific extension is the appropriate mechanism to ensure accurate calibrations and to encourage the use of particulate matter continuous emissions monitoring systems. Therefore, we are adding the phrase ''unless more time is approved by the Administrator'' to § 63.1206(b)(8)(v).

V. Alternative Hydrocarbon Monitoring Location for Short Cement Kilns Burning Hazardous Waste at Locations Other Than the ''Hot'' End of the Kiln

Section 63.1206(b)(13)(i) requires new and existing cement kilns to comply with a main stack hydrocarbon standard of 20 ppmv if hazardous waste is fed at a location other than the kiln end where fuels are normally fired and products are normally discharged (this is also described as the ''hot'' end of the kiln). These other locations can include firing hazardous waste at midkiln, at the upper end of the kiln where raw materials are fed, or in the calciner. In addition, if hazardous waste is fed at these other locations, the rule does not give a cement kiln the option to comply with a carbon monoxide standard in the main stack in lieu of the hydrocarbon standard.

After promulgation of the final rule, stakeholders provided additional information supporting an alternative to the mandatory monitoring location for hydrocarbons in the main stack for short, dry process cement kilns. In today's notice, we are revising the requirements of § 63.1206(b)(13) to allow short, dry process cement kilns to continuously monitor hydrocarbons in both the alkali by-pass duct and at a ''preheater tower combustion gas monitoring location'' as an alternative to hydrocarbon monitoring in the main stack.[4] In addition, we are revising the requirements of § 63.1206(b)(13) to allow short dry process cement kilns to continuously monitor both carbon monoxide in the alkali by-pass duct and hydrocarbons at a ''preheater tower combustion gas monitoring location'' under limited circumstances.

A. Why Are We Finalizing an Alternative to Hydrocarbon Monitoring in the Main Stack for Certain Cement Kilns?

At the time of the final rule, we were not aware of any short, dry process cement kilns firing hazardous waste at other locations than the kiln end where clinker product is discharged. As a result, we adopted the approach used in the Boiler and Industrial Furnace (BIF) rule[5] to control emissions of organic hazardous air pollutants from cement kilns that fire hazardous waste at these other locations as the best regulatory model. The BIF rule requires cement kilns that fire hazardous waste at locations other than the kiln end where clinker product is normally discharged to comply with a hydrocarbon limit in the main stack. Since promulgation of the rule, however, stakeholders submitted information about a new precalciner[6] cement kiln that will fire hazardous waste at locations other than the kiln end where clinker is normally discharged. One stakeholder also indicated that the main stack hydrocarbon standard may not be achievable due to hydrocarbons released from the raw materials in the upper stages of the preheater tower. Therefore, we are finalizing an alternative to main stack hydrocarbon monitoring that addresses a hazardous waste firing scenario not specifically considered during the development of the rule.

B. What Alternative to Hydrocarbon Monitoring in the Main Stack Are We Finalizing for Cement Kilns?

As an alternative to hydrocarbon monitoring in the main stack,[7] we are allowing short, dry process cement kilns to continuously comply with a hydrocarbon limit, and, under limited circumstances, a carbon monoxide limit at two separate locations within the kiln system. The two monitoring locations are: (1) In the alkali by-pass duct; and (2) in the upper stages of the preheater tower. The latter location is termed a ''preheater tower combustion gas monitoring location.'' These two locations are located downstream (in terms of gas flow) of all hazardous waste firing locations. In addition, all combustion gases pass one of these two locations.

The stakeholders claim that continuously monitoring hydrocarbons at both locations provides the best assessment of the quality of combustion and offers the same level of assurance that hazardous waste is effectively combusted as does a main stack hydrocarbon standard. Monitoring for efficient combustion of the hazardous wastes at these two locations also avoids the potential problem of hydrocarbons generated from organics in the raw materials and entrained in the gas stream.

1. Why Is Hydrocarbon Monitoring in the Alkali By-Pass Duct Appropriate?

Short, dry process cement kilns may be equipped with an alkali by-pass system where 10–30 percent of the rotary kiln combustion gas is diverted to a separate air pollution control device and sometimes to a separate stack. These kiln gases are diverted to avoid a build-up of metal salts that can adversely affect cement manufacturing operations. Hydrocarbon levels in the by-pass duct are indicative of the combustion efficiency of hazardous waste and fossil fuels fired in the rotary kiln. This is because the by-pass duct draws off combustion gases from the kiln prior to the point that hydrocarbons generated by organic materials in the raw material can be problematic.

We are finalizing a hydrocarbon standard of 10 ppmv in the by-pass duct (in addition to the preheater tower combustion gas monitoring location standards discussed below) for new and existing cement kilns that fire hazardous waste at a location other than the kiln end that clinker product is discharged because this level is indicative of good combustion conditions in the rotary kiln. Limiting hydrocarbons to 10 ppmv in the by-pass is identical to how a cement kiln with a by-pass duct or midkiln sampling system that only feeds hazardous waste at the kiln end where clinker product is normally discharged is regulated in the final rule. See §§ 63.1204(a)(5)(i)(B) and (b)(5)(i)(A)(2). For the same reasons a hydrocarbon standard of 10 ppmv was adopted in the rule, we likewise believe a hydrocarbon standard of 10 ppmv is appropriate in this situation. See 64 FR at 52887.

In today's direct final rule, with the exception discussed below, we are not allowing new and existing short, dry process cement kilns the option to comply with a carbon monoxide standard in the alkali by-pass duct when feeding hazardous wastes at any point in the rotary kiln downstream (in terms of gas flow) of the kiln end where

[4] In today's action, we are defining ''preheater tower combustion gas monitoring location.'' See definition in § 63.1201.

[5] See 56 FR at 7158.

[6] See ''Final Technical Support Document for Hazardous Waste Combustor MACT Standards, Volume I: Description of Source Categories,'' July 1999, for a process description of precalciner cement kilns.

[7] The alternative hydrocarbon standard would not replace the hydrocarbon standard of 20 ppmv in the main stack as provided in § 63.1206(b)(13)(i). Cement kilns would continue to have the option to monitor hydrocarbons in the main stack.

clinker product is normally discharged. We do not allow this option because we do not have sufficient emissions data, using this alternative hazardous waste firing scenario, to fully evaluate the impacts. We are concerned that organic compounds in the hazardous waste could be thermally cracked to form pyrolysis by-products rather than be completely combusted. If so, little carbon monoxide may be generated by the process and monitoring carbon monoxide alone would not ensure that hydrocarbons were minimized. Without these emissions data, we believe hydrocarbon monitoring is a more conservative, direct surrogate for control of organic hazardous air pollutants than are carbon monoxide emissions.

2. Under What Circumstances Is Monitoring of Carbon Monoxide in the Alkali By-Pass Appropriate?

There may be limited circumstances where carbon monoxide monitoring (as an option to hydrocarbon monitoring) in the alkali by-pass duct may be appropriate. An example would be a cement kiln whose only hazardous waste firing location upstream (in terms of gas flow) of the point where combustion gases are diverted into the alkali by-pass duct is at the kiln end where products are normally discharged. Another example would be a cement kiln that only fires hazardous waste at a location(s) downstream (in terms of gas flow) of the point where combustion gases are diverted into the alkali by-pass duct. Firing hazardous waste under these circumstances reduces our concern that organic compounds in the hazardous waste could be thermally cracked to form pyrolysis by-products rather than be completely combusted.

We are finalizing a carbon monoxide standard of 100 ppmv (as an option to hydrocarbon monitoring) in the by-pass duct (in addition to the preheater tower combustion gas monitoring location standards discussed below) for new and existing cement kilns whose only hazardous waste firing location upstream of the point where combustion gases are diverted into the alkali by-pass duct is at the kiln end where products are normally discharged. Thus, if sources feed hazardous waste at the upper end of the kiln where raw materials are fed, or any other location upstream of where gases enter the by-pass duct other than the kiln end where products are discharged, then a cement kiln would not be eligible for this option to monitor carbon monoxide instead of hydrocarbons.

We are finalizing a carbon monoxide standard of 100 ppmv for control of organic hazardous air pollutants. A level of 100 ppmv is the same level that we established in the rule for cement kilns that only fire hazardous waste at the kiln end where products are normally discharged. See §§ 63.1204(a)(5)(i)(A) and (b)(5)(i)(A)(1). For the same reasons a carbon monoxide standard of 100 ppmv was adopted in the rule, we likewise believe the same carbon monoxide standard of 100 ppmv is appropriate in this situation. See 64 FR at 52887.

In addition, if a source elects to comply with the carbon monoxide standard in the by-pass duct, we are requiring the source to demonstrate compliance with a hydrocarbon standard of 10 ppmv in the by-pass duct during the comprehensive performance test. This is consistent with the requirements for cement kilns that comply with a carbon monoxide standard in the by-pass duct when only firing hazardous wastes at the kiln end where clinker is normally discharged. See §§ 63.1204(a)(5)(i)(A) and (b)(5)(i)(A)(1).

3. Why Is Hydrocarbon Monitoring at the ''Preheater Tower Combustion Gas Monitoring Location'' Appropriate?

Since only 10–30 percent of combustion gas is routed through the alkali by-pass duct, most short, dry process cement kilns' combustion gas travels through the cyclone stages of the preheater tower. Typically, raw material is introduced at the top of the preheater tower, which is a series of cyclones. Hot kiln flue gases move counter-current through the downward-moving raw material prior to introduction into the cement kiln. The cyclones are used to separate the raw material from the combustion gases and collected raw material sequentially is dropped into the next lower stage. Fossil and hazardous waste fuels can be fired in a calciner burner prior to the series of cyclones to further increase the raw material temperatures prior to introduction into the cement kiln.

A stakeholder identified a flue gas sampling location within the preheater tower where they believe a representative sample of combustion gas can be continuously monitored for hydrocarbons to demonstrate efficient combustion of the hazardous wastes. The stakeholder states that the preheater tower combustion gas monitoring location allows for continuous monitoring of hydrocarbons at a location downstream of the last point of hazardous waste fuel combustion, yet upstream of where non-fuel hydrocarbons from organics in the raw materials are generated and entrained in the gas stream. This location is termed a ''preheater tower combustion gas monitoring location.''

We are finalizing a hydrocarbon standard of 10 ppmv at the preheater tower combustion gas monitoring location (in addition to the alkali by-pass duct standards above) as an alternative to the main stack standard of 20 ppmv. Monitoring of hydrocarbons at the preheater tower combustion gas monitoring location is necessary to control emissions of organic hazardous air pollutants. We are finalizing a hydrocarbon standard of 10 ppmv for the same reasons discussed above for monitoring in the alkali by-pass duct. In addition, we are not allowing carbon monoxide monitoring at the preheater tower combustion gas monitoring location as an alternative to hydrocarbon monitoring for the same reasons discussed above for monitoring in the alkali by-pass duct.

VI. Alternative to the Particulate Matter Standard for Incinerators Feeding Low Levels of Metals

The final rule establishes a particulate matter emissions standard of 0.015 gr/dscf for new and existing incinerators as a surrogate to control non-mercury, CAA metal hazardous air pollutants (HAPs).[8] The rule also offers an alternative particulate matter emissions standard of 0.03 gr/dscf for incinerators that demonstrate the use of superior feedrate control of HAP metals in their hazardous waste feed. See § 63.1206(b)(14). Today, we are eliminating the alternative particulate matter emissions standard and replacing it with an alternative metal emissions control requirement. An incinerator source may elect to comply with this alternative requirement in lieu of complying with the 0.015 gr/dscf particulate matter standard. This source would remain subject to the existing standard for particulate matter in RCRA rules of 0.08 gr/dscf (a standard which would remain in the source's RCRA permit, should a source elect to comply with the alternative standard). See § 264.343(c). We are finalizing this option because we conclude that the alternative metal emissions control requirements control metal HAP emissions to levels based on MACT absent a particulate matter standard.

[8] Particulate matter is not a CAA HAP. The HWC MACT rule establishes a particulate matter standard to control non-mercury CAA HAP metals that are not directly controlled with an emission standard. See 64 FR at 52846–47.

A. Why Is EPA Eliminating the Alternative Particulate Matter Standard and Replacing It With Alternative Metal Emission Control Requirements?

We included the alternative particulate matter standard in the final rule after receiving comments that a particulate matter standard of 0.015 gr/dscf is not an appropriate surrogate to control metal hazardous air pollutants in situations where the particulate matter does not contain significant levels of metal HAPs. For example, this would include situations where the hazardous waste does not contain metals, and the resulting ash contains only relatively benign salts. (See § 63.1206(b)(14) and 64 FR 52972 for further discussion). To be eligible for the original alternative standard, incinerators must demonstrate that: (1) Non-mercury, metal HAPs are not detected in any feedstream; and (2) the maximum theoretical emission concentrations (MTEC) [9] for semivolatile and low volatile HAP metals are lower than the corresponding semivolatile and low volatile metal emission standards, assuming that non-detect metals are present at one-half the detection limit.

Based on additional information from stakeholders, we have determined that this approach did not provide the intended relief to incinerators with low levels of hazardous air pollutant metals in their feedstreams for two reasons. First, even for incinerators with very low levels of these metals in their feeds, over time metals measurements above detection limits will occasionally occur. This can occur as a result of trace metal contamination due to corrosion and/or inherent impurities in raw materials, as well as potential anomalies and variability of the analytical measurement method. Second, high detection limits that occur as a result of complex feedstream matrices may prevent a source from demonstrating that the MTECs are less than the low volatile or semivolatile metal emission standards. Because this original approach did not provide the intended relief, we are finalizing a more effective alternative to the particulate matter emission standard.

B. What Alternative Is EPA Finalizing?

In today's notice, we are allowing a source to operate under alternative HAP metal emission control requirements reflecting MACT in lieu of complying with the 0.015 gr/dscf particulate emission standard. Under the alternative, no particulate matter emission standard will apply to the incinerator under Subpart EEE; however, the incinerator will remain subject to the RCRA particulate matter standard of 0.08 gr/dscf pursuant to § 264.343(c). This is because without a sufficiently protective particulate matter standard under Subpart EEE, we cannot defer our RCRA obligation to provide for a particulate matter requirement to Subpart EEE.[10]

The alternative to the particulate matter standard has three components. The first component is simply to meet metal emission standards for semivolatile and low volatile metals. The level of the standard is the same as that which applies to other incinerators, but the standard would apply to all HAP metals, not just those enumerated in the present semi-and low volatile metal standards. The second component is a requirement for the incinerator to demonstrate that it is using reasonable hazardous waste metal feedrate control, i.e., a defined metal feedrate that is better than the MACT-defining metal feedrate floor control level. [11] The third component is a requirement for the incinerator to demonstrate that its air pollution control system achieves, at a minimum, a 90 percent system removal efficiency for semivolatile metals. These components, which are described separately below, should provide for adequate control of non-mercury HAP metals in lieu of a particulate matter standard.

1. What Emission Limitation Must the Incinerator Comply With Under This Alternative?

Incinerators must comply with the same semivolatile and low volatile metal emission limitations that are specified in the final rule; however, the emission limitations apply to both enumerated *and* non-enumerated metal HAPs, excluding mercury. As discussed in the rule, enumerated metals are those metals that are directly controlled with a numerical emission standard, i.e., cadmium, lead, arsenic, beryllium, chromium. Non-enumerated metals are those metals, i.e., antimony, cobalt, manganese, nickel, and selenium that are not controlled directly with an emission standard, but are controlled through the surrogate particulate matter standard. For purposes of these alternative requirements, the non-enumerated metals are classified as either a semivolatile or a low volatile metal, and included in the calculation of compliance with the corresponding emissions limit.

For existing incinerators, the resulting emissions limits are: (1) A semivolatile emission limitation of 240 μg/dscm for the combined emissions of lead, cadmium, and selenium; and (2) a low volatile emission limitation of 97 μg/dscm for combined emissions of arsenic, beryllium, chromium, antimony, cobalt, manganese, and nickel (all emissions corrected to 7% oxygen).

For new sources, the resulting emissions limits are: (1) A semivolatile emission limitation of 24 μg/dscm for combined emissions of lead, cadmium, and selenium; and (2) a low volatile emission limitation of 97 μg/dscm for emissions of arsenic, beryllium, chromium, antimony, cobalt, manganese, and nickel (all emissions corrected to 7% oxygen).

We conclude it is appropriate to incorporate both the enumerated and non-enumerated metals into the semivolatile and low volatile metal emissions limits because this, in combination with the other two requirements discussed below, provides a reasonable approach to directly assure that the non-enumerated metal emissions are controlled to levels representative of MACT, in lieu of a particulate matter standard. This approach, in effect, lowers the existing semivolatile and low volatile metal emissions limits because the contribution of non-enumerated metals must be accounted for when achieving the same numerical semivolatile and low volatile emission limits. We believe this is appropriate because this effectively lower emissions limit for enumerated metals compensates for the lower emission levels that would have been achieved if the source used a particulate matter control device capable of achieving 0.015 gr/dscf, i.e., a control device that is an integral part of MACT control for semivolatile and low volatile metals. Put another way, we regard this emission limitation as an equivalent means of meeting the floor standard for HAP metals (except mercury) already established in the rule.

[9] We developed the term ''Maximum Theoretical Emissions Concentration'' to compare metals feedrates across sources of different sizes. MTEC is defined as the metals feedrate divided by the gas flowrate, and is expressed in μg/dscm.

[10] Sources electing to comply with these alternative requirements will be subject to the RCRA PM standard in their RCRA permit. The RCRA permit must include applicable operating limits that ensure compliance with the RCRA PM limit. Permit writers can impose a lower PM limit where necessary pursuant to the omnibus authority under section 3005(c)(3) of RCRA.

[11] These MACT defining feedrates are set out in ''Final Technical Support Document for HWC Standards, Volume III: Selection of MACT Standards and Technologies,'' Chapter 6, July 1999.

2. What Hazardous Waste Metal Feedrate Control Requirement Must the Incinerator Comply With Under This Alternative?

Each incinerator that elects to operate under these alternative requirements must demonstrate that it is using reasonable hazardous waste metal feedrate control, i.e., it complies with a defined hazardous waste metal feedrate limit that is significantly lower than the MACT-defining metal feedrate floor control level. We define ''reasonable hazardous waste metal feedrate control'' as a hazardous waste metal HAP feedrate that does not exceed 25 percent of the MACT defining MTEC level.[12] Consistent with the above discussed emission standards, the hazardous waste metal feedrate limits apply to both enumerated and non-enumerated metal HAPs. The non-enumerated metal HAPs are categorized as either semivolatile or low volatile, and are incorporated into a corresponding semivolatile or low volatile hazardous waste metal feedrate limit.[13]

For existing incinerators, the resulting hazardous waste metal feedrate limits are: (1) The twelve-hour rolling average of the maximum theoretical emissions concentration for lead, cadmium, and selenium, combined, for the combined hazardous waste feedstreams to the incinerator, must not exceed 1,325 μg/dscm; and (2) the twelve-hour rolling average of the maximum theoretical emissions concentration for arsenic, beryllium, chromium, antimony, cobalt, manganese, and nickel, combined, for the combined hazardous waste feedstreams to the incinerator, must not exceed 6,000 μg/dscm.[14]

For new sources, the resulting hazardous waste metal feedrate limits are: (1) The twelve-hour rolling average of the maximum theoretical emissions concentration for lead, cadmium, and selenium, combined, for the combined hazardous waste feedstreams to the incinerator, must not exceed 875 μg/dscm; and (2) the twelve-hour rolling average of the maximum theoretical emissions concentration for arsenic, beryllium, chromium, antimony, cobalt, manganese, and nickel, combined, for the combined hazardous waste feedstreams to the incinerator, must not exceed 3250 μg/dscm.

We believe hazardous waste metal feedrate limits are essential parts of these alternative requirements. As discussed in the final rule preamble and in comment response documents, particulate matter control is an integral part of controlling both the enumerated and non-enumerated semivolatile and low volatile metals.[15] Therefore, any source that uses a particulate matter control technique that is less efficient than the MACT particulate floor standard should be required to use a ''better than MACT'' hazardous waste metal feedrate control (i.e., a level of feedrate control that compensates for the inefficient particulate control collection so that actual emissions of HAP metals reflect MACT). We believe that 25 percent of the MACT feedrate control levels for the combined enumerated and non-enumerated metal HAPs is within a reasonable range of values that are significantly lower than the MACT feedrate control levels. This feedrate control requirement, when combined with the emissions limit and system removal efficiency requirement, provides adequate control of metal HAPs (control equivalent to promulgated MACT).

3. How Efficient Must the Incinerator's Air Pollution Control Equipment Operate in Order To Comply With This Alternative?

If you elect to operate under these alternative requirements, you must demonstrate that the air pollution control system achieves at least a 90 percent system removal efficiency for semivolatile metals. Metal removal efficiency—whether measured by control of the surrogate particulate matter or directly through control of HAP metals—remains an essential element (along with feedrate control of HAP metals) of MACT for the non-mercury HAP metals, as demonstrated by the performance achievable by (and achieved by) the average of the best performing sources. In making this demonstration, you may spike semivolatile metals above 25 percent of the MACT defining MTEC level provided the emissions limits discussed above are achieved during the test. You may perform this test independently of the comprehensive performance test; however, you must use this test to establish applicable operating parameter limits as described in § 63.1209(n), excluding the § 63.1209(n)(2) metal feedrate limit requirements. These operating limits are needed to assure that a 90 percent semivolatile metal system removal efficiency is achieved during normal operations at the metal feedrates demonstrated during the test.

The 90 percent system removal efficiency requirement is based on the use of a well designed and well operated high energy venturi type wet scrubber. An analysis of hazardous waste incinerator trial burn data shows that systems with well operated and well designed venturi scrubbers have semivolatile metal system removal efficiencies ranging from approximately 90 percent to greater than 99.9 percent.[16] Thus, we are finalizing a semivolatile metal system removal efficiency of 90 percent as a conservative representation of control using a well designed and well operated high energy venturi scrubber. This method to select an appropriate control level is similar to the approach we used to develop the alternative particulate matter standard 0.03 gr/dscf that also was based on the use of well designed and well operated high energy venturi scrubbers.

System removal efficiency provides a direct indicator of the non-mercury metal HAP control efficiency of the hazardous waste incinerator system. The shift away from the use of a direct particulate matter emission standard to control non-mercury metal HAPs is a result, in part, of the reduced need for low metal feeding facilities to control particulate matter. For low metals feeding facilities, particulate matter may be composed primarily of non-metal HAP constituents such as silica, alumina, iron, etc., or HAP metals not present in hazardous waste. Thus, the control of particulate matter is not as strongly related to the control of HAP metals contributed by the hazardous waste compared with facilities which have feeds containing higher levels of those metals.

We also believe it is appropriate to require a 90 percent semivolatile metal system removal efficiency as part of these alternative requirements because,

[12] I.e., the MTEC level that was determined as a result of the aggregate feedrate analysis that was used to determine metal feedrate floor control levels in the September 30, 1999 rule.

[13] Thus, unlike the current rule where sources can choose whatever means they wish to comply with the emissions standard and so are not required to control feedrates below a regulatory level (so long as they achieve the emission standard), sources are required to comply with a specified metal feedrate limit under the alternative.

[14] These metal feedrate limits correspond to 25 percent of the MACT-defining MTEC levels. These MACT defining feedrates are set out in ''Final Technical Support Document for HWC Standards, Volume III: Selection of MACT Standards and Technologies,'' Chapter 6, July 1999.

[15] See, for example, Table 8–1, pages 2 and 3, ''Final Technical Document for HWC Standards, Volume III: Selection of MACT Standards and Technologies,'' Chapter 3, July 1999, showing that sources with SVM feedrates below the MACT defining level but lacking proper PM control (i.e., emitting more PM than allowed by the PM standard) were unable to achieve the SVM emission standard.

[16] See Figure 4–3, ''Draft Technical Support Document for HWC MACT Standards (NODA), Volume 1: MACT Evaluations Based on Revised Database,'' April 1997.

absent a particulate matter standard, there would be no explicit requirement for sources to use an air pollution control method that effectively removes metal HAPs from the exhaust emissions.[17] This provision therefore requires sources that operate under these alternative requirements to use a particulate matter control device. Even though this control device does not have to be a MACT particulate matter control device (i.e., a control device that achieves 0.015 gr/dscf) we believe that this requirement to achieve a 90 percent system removal efficiency, when combined with the hazardous waste metal feedrate limits and emissions limits, provides for an adequate level of control for HAP metals—that is, a level of control reflecting the level of performance achieved by, and achievable by, the average of the best performing 12 percent of sources.

4. What Operating Requirements Are Associated With This Alternative?

Semivolatile and low volatile metal operating parameter limits will be established to ensure compliance with the alternative emissions limits pursuant to § 63.1209(n), except that the semivolatile and low volatile metal feedrate limits apply to both the enumerated and non-enumerated HAP metals as previously discussed. We believe this approach is consistent with the final rule methodology to assure compliance with the semivolatile and low volatile metal emission standards and should be applied here. Note that the metal feedrate limits established to ensure compliance with the alternative emissions limit are mass feedrate limits for all feedstreams, including nonhazardous feeds. This is in contrast to the hazardous waste metal feedrate limits discussed below that are based only on hazardous waste metal MTEC levels.

You must also establish operating parameter limits to ensure compliance with the 90 percent system removal efficiency requirement. Consistent with the operating limits to ensure compliance with the alternative metal emission limitations, these operating limits would be established pursuant to § 63.1209(n), except that metal feedrate limits are not required for purposes of ensuring compliance with system removal efficiency provision.

The twelve-hour rolling average hazardous waste metal feedrate limits are based on the combined hazardous waste feedstreams to the incinerator and may be expressed either as a maximum theoretical emission concentration limit or as a restriction on maximum hazardous waste metals mass feedrate and minimum gas flow rate. In doing so, sources must account for each hazardous waste feedstream when determining compliance with the maximum theoretical emission concentration limits. Metal constituents not detected in hazardous waste feedstreams would be assumed to be present at one-half the detection limit when calculating the maximum theoretical emission concentration for compliance purposes, applicable to each hazardous waste feedstream.

VII. Deletion of Baghouse Inspection Requirements

Section 63.1206(c)(7)(ii) of the final rule prescribes baghouse operation and maintenance requirements for incinerators and lightweight aggregate kilns. These requirements are not applicable to cement kilns equipped with baghouses because cement kilns must continuously monitor opacity and comply with an opacity standard. Nonetheless, cement kilns are required to address baghouse operation and maintenance in the operation and maintenance plan required under § 63.1206(c)(7)(i).

The operation and maintenance requirements under § 63.1206(c)(7)(ii): (1) Prescribe the frequency of inspection of specific baghouse operations; and (2) require the use of a bag leak detector as a continuous monitor. We are today deleting the prescribed baghouse inspection requirements of § 63.1206(c)(7)(ii)(B)(1–10). Instead we will rely on the general operation and maintenance plan requirements under § 63.1206(c)(7)(i) and the use of a bag leak detector to ensure proper operation and maintenance of the baghouse.

Stakeholders question the rationale for prescribing generic inspection frequencies for various baghouse operations, given that each baghouse must be equipped with a bag leak detector. Stakeholders believe that each source should identify appropriate, site-specific inspection intervals for baghouse operations in the facility operations and maintenance plan required under § 63.1206(c)(7)(i). In particular, they highlight two burdensome inspection requirements: (1) Monthly visual inspection of the interior of the baghouse for physical integrity; and (2) monthly inspection of bags and bag connections.[18]

We agree with stakeholders that these generic provisions are unnecessary and therefore are deleting the inspection requirements of § 62.1206(c)(7)(ii)(B)(1–10). We plan to develop guidance recommendations on baghouse inspection procedures that can be used to develop appropriate inspection procedures for the operation and maintenance plan required by § 63.1206(c)(7)(i). In addition, we are deleting the requirements of § 63.1206(c)(7)(ii)(A) requiring submittal of the baghouse operations and maintenance plan to the Administrator. Given that the operation and maintenance plan required under § 63.1206(c)(7)(i) is not submitted to the Administrator for review and approval, we do not see the need to single out the baghouse operation and maintenance plan for review and approval, particularly given that sources must continuously operate a bag leak detector system.

VIII. Feedstream Analysis for Organic HAPs

Section 63.1207(f)(1)(ii) of the final rule requires sources to include in their site-specific comprehensive performance test plan an analysis of all CAA hazardous air pollutants that could reasonably be present in their feedstreams. Regulatory officials will use this analysis to ensure compliance with the destruction and removal (DRE) standards of §§ 63.1203 through 63.1205. Stakeholders raised three questions about this requirement after promulgation: (1) Did we consider the implications of requiring analysis of HAPs rather than the RCRA organic compounds on Appendix VIII, Part 261; (2) why must the test plan for periodic comprehensive performance testing include an analysis of organic HAP compounds for sources that comply with the DRE standard with a one-time test; and (3) did we intend to require analysis of organic compounds for all feedstreams or just the hazardous waste feedstreams.

A. What Are the Implications of Requiring Analysis of CAA HAPs Rather than RCRA Appendix VIII, Part 261 Organic Compounds?

For the DRE standard, the final rule requires demonstration of compliance with one or more principal organic hazardous pollutants (POHCs) selected

[17] Absent a metal system removal efficiency requirement under these alternative requirements, an incinerator could comply with the emission limitations with feedrate control only without the use of particulate matter control. This would not be appropriate if metals are present in the feedstreams because particulate matter control is an integral part of controlling metal HAP emissions.

[18] Letter from Michelle Lusk, CKRC, Thomas Nilan, CMA, and Melvin Keener, CRWI, to Elizabeth Cotsworth, EPA, Re. Multi-Industry HWC MACT Concerns and Solutions, dated March 2, 2000, p. 29 of the attachment.

from the list of HAPs established by 42 U.S.C. 7412(b)(1), excluding caprolactam. The basis for the HWC MACT DRE standard is the current RCRA requirement to ensure destruction of Appendix VIII, Part 261, organic compounds. In demonstrating compliance under RCRA, sources must select POHCs from the Appendix VIII list of organic compounds.

Stakeholders note that selecting POHCs from the list of organic CAA HAPs rather than RCRA organic compounds has several implications. Stakeholders question whether RCRA DRE test data can be used in lieu of MACT DRE testing if the POHCs selected during the RCRA test are not organic HAPs under the CAA. Stakeholders also question how to ensure DRE of organic HAPs for which thermal stability data (e.g., low oxygen thermal stability; heat of combustion) are not available. In response, we note that, to satisfy the MACT DRE standard, sources must ensure that the POHCs used to demonstrate compliance are representative of the most difficult to destroy organic compounds in their feedstream. For example, if the most difficult to destroy POHCs for RCRA DRE testing were used, those POHCs are also representative of the most difficult to destroy organic HAPs (irrespective of whether thermal stability data are available for a HAP).

B. For Sources That Comply With the DRE Standard With a One-Time Test, Why Must Their Periodic Comprehensive Performance Test Plan Include an Analysis of Organic HAP Compounds?

Section 63.1206(b)(7) allows demonstration of compliance with the DRE standard only once for the life of the source provided the source: (1) Is not modified in a manner than could affect achievability of the DRE standard; and (2) does not feed hazardous waste at a location other than the normal flame zone. Once a source has demonstrated compliance with the DRE standard, stakeholders question why analysis of waste streams for organic HAP compounds must be included with the site-specific test plan for comprehensive performance testing every five years.

The rule requires continued analyses of organic compounds with each comprehensive performance test plan to enable regulatory officials to determine whether the POHCs selected for the original DRE test continue to represent the organic HAPs being fed to the combustor. POHCs are representative of the organic HAPs fed to the combustor if they are equally or more difficult to destroy than those organic HAPs. In addition, POHCs are selected based on factors including the concentration of the organic compound in the feedstream and the toxicity of particular organic compounds.[19]

In retrospect, however, we do not believe that the comprehensive analysis required by § 63.1207(f)(1)(ii)(A)[20] is necessary in all cases to ensure that the POHCs continue to be representative of the organic HAPs being fed to the combustor. For example, if a source demonstrates compliance with the DRE standard with POHCs that represent the most difficult to destroy organic compounds, a less rigorous feedstream analysis may be appropriate to address other concerns, e.g., whether the feedstream has changed to include additional organic HAPs that are fed at high concentrations or that are particularly toxic. It may also be appropriate to waive the comprehensive analysis for organic compounds based on the generator's knowledge or on a combination of waste knowledge and sampling and laboratory analysis that the POHCs selected represent the most difficult to destroy organic compounds in the waste. Accordingly, we are amending § 63.1207(f)(1)(ii) to allow regulatory officials to waive the comprehensive analysis of organic compounds if a source documents that the POHCs used to demonstrate compliance with the DRE standard continue to be representative of the organic HAPs in hazardous waste feedstreams.

C. We Intended To Require Analysis of Organic HAPs in Hazardous Waste Feedstreams Only

Section 63.1207(f)(1)(ii) implies that sources must analyze all feedstreams for organic HAPs. The rule should have required analysis for hazardous waste feedstreams only. Regulatory officials will use the analysis to ensure that the POHCs used to demonstrate compliance with the DRE standard continue to be representative of the organic HAPs in hazardous waste feedstreams. We are amending § 63.1207(f)(1)(ii) accordingly.

[19] In cases where an organic HAP is fed at particularly high concentrations, or where an organic HAP in the feedstream is particularly toxic, it is prudent to select such compounds as POHCs rather than relying only on surrogates that are considered to be equally or more difficult to destroy.

[20] That is, all organic HAPs except those that would not reasonably be expected to be found in the feedstream. Further, sources must identify any constituents excluded from the analysis and explain the basis for excluding them.

IX. Revisions to the Metals Feedrate Extrapolation Procedures

For sources using the metal extrapolation procedures, the final rule requires documentation that the levels of metal spiking (adding metals to the waste feed) be sufficient to demonstrate that the extrapolation procedures are as accurate and precise as if full spiking (no extrapolation) were used. See § 63.1207(f)(1)(x)(C). Today we are amending this provision to require documentation that spiking levels result in an extrapolation procedure that adequately assures compliance with the emission standard.

We included this requirement in the final rule to address the uncertainties that may be associated with extrapolating low metal feedrates, as demonstrated during testing, to higher metal feedrate limits. This documentation ensures that the uncertainties associated with the procedure are adequately addressed and that the extrapolated metal feedrate limits ensure compliance with the emission standard(s).

After discussions with stakeholders, we determined that the final rule regulatory language is too prescriptive and does not directly address our goal of assuring compliance with the emission standard. Stakeholders believe that it may not be possible to spike metals to levels such that the extrapolation procedures are as accurate and precise as if full spiking were used. They also question the accuracy and precision of the ''fully spiked'' feedstream and emissions analyses.

To address these concerns, we are requiring that sources document a level of spiking that ensures the extrapolation methodology is adequate to demonstrate compliance with the emission standard. The content and scope of this documentation should be determined on a site-specific basis, and should consider the uncertainties involved with extrapolating the tested low metal feedrates to higher metal feedrate limits. Examples of types of information that can document that the extrapolation methodology adequately assures compliance with the emission standards may include: (1) A description of the uncertainties associated with the extrapolation procedure, such as a description of the linearity of metal feedrates as compared to metal emission rates; (2) a description of the uncertainties associated with the data to be used in the extrapolation procedure;[21] and (3) the extent that

[21] For example, a description of the accuracy of the feedstream metal analysis considering the

Continued

these uncertainties are multiplied by the extrapolation procedure.

X. Feedrate Limits for Undetectable Constituents

The final rule requires sources to establish separate feedrate limits during the comprehensive performance test for semivolatile metals, low volatile metals, mercury, total chlorine, and/or ash for each feedstream that does not contain detectable levels of these constituents. See § 63.1207(n). The rule specifies that these separate feedrate limits must be established as ''non-detect'' feedrate limits. Under this approach, during normal operations, the feed locations that have ''non-detect'' limits cannot be fed detectable levels of the constituents unless certain criteria are met. Today, we are deleting this provision and, instead, are requiring sources to document, on a site-specific basis, the method they will use to account for non-detects when establishing feedrate limits.

We included this ''non-detect feedrate limit'' provision in the rule so sources would use a consistent methodology when establishing feedrate limits that best assures compliance with the emission standards. After discussions with stakeholders, we conclude that our approach to addressing detection limits when establishing feedrate limits is too prescriptive and that there are possibly alternative approaches that adequately assure compliance with the emission standards. Therefore, we are eliminating the requirements of § 63.1207(n) that require use of a specific method to address non-detects when establishing feedrate limits. As a replacement, we are requiring sources, on a site-specific basis, to specify in the comprehensive performance test workplan the method they will use to account for non-detects when establishing their feedrate limits. This will allow the method to be reviewed and approved by the regulatory official on a site-specific basis.

We continue to believe that the approach outlined in the final rule can be used to account for non-detects during the performance test. However, as previously mentioned, there may be alternative approaches that can be used that adequately assure compliance with the standards.[22]

We believe today's amendments to address non-detects on a site-specific basis will simplify the operating requirements for many combustors. We anticipate that regulatory officials will evaluate these site-specific approaches in part by considering: (1) Proximity of test results to the regulatory emission standard(s); (2) site-specific detection limit levels; and (3) the method or approach to address feedstream non-detects on a daily basis to demonstrate feedrate compliance. Accordingly, we are removing the requirements of § 63.1207(n) and adding § 63.1207(f)(xxvi).

XI. Revisions To Assist Early Compliance

In the final rule, we did not fully consider situations where sources would conduct performance testing prior to the compliance date. This ''early compliance'' prior to the September 30, 2002 deadline, is likely to occur to coordinate CAA and RCRA testing or to ensure the deadline for conducting the initial comprehensive performance test (i.e. 180 days after the compliance date) is met. We are particularly concerned that the regulation may inadvertently impede sources that would like to come into early compliance. Therefore, we are eliminating two impediments identified by stakeholders: (1) The requirement to stop burning hazardous waste if a source fails the comprehensive performance test; and (2) the requirement for the Documentation of Compliance.

A. When Is the Compliance Date for Sources that Comply Early?

Sources that choose to comply early are establishing a compliance date for themselves prior to the regulatory compliance date of September 30, 2002. On their compliance date, the source becomes subject to the substantive requirements of Subpart EEE. For example, on the compliance date, an exceedance of an emission standard (e.g., carbon monoxide) is a violation of the standard, and an exceedance of an operating parameter limit is evidence of failure to ensure compliance with an emission standard.

After considering the implications of early compliance, we are identifying the point at which the early complying source becomes subject to the substantive requirements of Subpart EEE as the postmark date for the Notification of Compliance (NOC). This is an appropriate point because the NOC is a legally enforceable document that contains all of the standards and operating parameters for a source complying with Subpart EEE.[23] See new § 63.1206(a)(4).

B. Sources That Fail a Comprehensive Performance Test Prior to the Compliance Date Are Not Required To Stop Burning Hazardous Waste

Section 63.1207(l) requires sources that fail a performance test for a mode of operation to stop burning hazardous waste immediately under that mode of operation. In retrospect, we conclude that this requirement is not appropriate for sources that conduct the performance test prior to the compliance date, including early complying sources, because compliance with the substantive requirements Subpart EEE is not yet triggered. Therefore, we are revising the rule accordingly. See revised § 63.1207(l)(1).

C. Early Complying Sources Would Be Exempt From the Documentation of Compliance Requirements

Section 63.1211(d) requires sources to place their Documentation of Compliance (DOC) in the operating record by the regulatory compliance date. The DOC identifies the applicable emission standards under Subpart EEE and the limits on the operating parameters under § 63.1209 that ensure compliance with those emission standards. In addition, the DOC identifies enforceable operating requirements from the compliance date until postmark of the Notification of Compliance. Given that the compliance date for early complying sources is the date the NOC is postmarked, the DOC would serve no purpose. Therefore, we are exempting early complying sources from the DOC requirement. See revised § 63.1211(d).

D. Notification of Testing for Sources That Choose To Comply Early

As with all Subpart EEE sources, those that comply early must notify permit officials of the scheduled performance test date and submit for review and approval the emissions test plan and continuous monitoring system evaluation test plan. See § 63.1207(e). Review and approval of test plans is appropriate for sources that comply early for the same reasons it is

representativeness (whether the feedstream is homogenous) of the feedstream samples if actual, unspiked feedstream metal levels are used to calculate metal feedrates.

[22] For example, separate limits for each location may not be needed to assure compliance with the standards if the detection limits are low. In this situation, a source could assume the constituent is not present in the non-detect feedstreams, or perhaps assume it is present at one-half the detection limit, and establish one total system feedrate limit instead of separate limits. This would be accomplished by adding these assumed non-detect feedrate values to the other known feedrates from the other feed locations.

[23] Sources will want to delete RCRA permit requirements that have been superseded by the Subpart EEE standards. See 64 FR at 52988. Modifying the RCRA permit precludes concerns about dual enforcement of emission standards.

appropriate for other sources—to ensure that the source's performance test plans will effectively determine whether the source is in compliance with the requirements of Subpart EEE. We encourage permit officials to review performance test plans expeditiously for sources that elect to comply early.

XII. Accuracy Requirements for Weight Measurement Devices

Section 63.1209(b)(2)(ii) specifies that the accuracy of weight measurement devices used to monitor flowrate of a feedstream must be ± 1 percent of the weight being measured. In addition, sources are required to verify the calibration of the device at least once every three months.

Stakeholders express concerns about these requirements. We concur with many of stakeholders' concerns about the accuracy requirement for weight measurement devices and are revising the rule to specify an accuracy requirement only for activated carbon feedrate measurement devices.

Stakeholders state that the ± 1 percent accuracy requirement is not appropriate for all weight measurement devices. This accuracy requirement is the same as we used in another rulemaking where it is applied only to the device used to measure carbon feedrate in an activated carbon injection system. Stakeholders state that the ± 1 percent accuracy is not achievable by many weight measurement devices, such as devices that measure the weight of raw materials.[24] Stakeholders also note that the implementation document for the boiler and industrial furnace standards under Part 266, Subpart H, lists acceptable measurement devices than cannot achieve this level of accuracy.

We agree with the stakeholders' concerns and are revising § 63.1209(b)(2)(ii) so that the accuracy requirement applies only to a carbon injection weight measurement device. Nonetheless, sources must include in the continuous monitoring system evaluation test plan the accuracy and calibration procedures for each monitor required under § 63.1209. This evaluation test plan must be submitted along with the comprehensive performance test plan for review and approval. See § 63.1207(e).

[24] For example, a clamshell bucket cannot achieve this level of accuracy for the feedstock because of the large weight of the clamshell relative to the feedstock and because some of the feedstream will stick to the bucket.

XIII. Deletion of Requirement for Establishing a Scrubber Liquid Minimum pH Operating Parameter Limit for Mercury Control for Wet Scrubbers

The final rule states that mercury emissions from hazardous waste combustors are controlled by: (1) Controlling the feedrate of mercury; (2) wet scrubbing to remove soluble mercury (e.g., mercuric chloride); and (3) carbon adsorption. There are specific operating parameter limits (OPL) that apply to each control technology.

For hazardous waste combustors using wet scrubbers to control mercury the OPLs are identical to those that are required to assure compliance with the hydrochloric acid/chlorine gas emission standard. See §§ 63.1209(l)(2) and (o)(3). We inadvertently established an inappropriate OPL requirement for mercury in developing the final rule. While a minimum pH of the scrubber water is an important parameter for chlorine control as required by § 63.1209(o)(3)(iv), it is not an appropriate OPL for mercury control. The Agency is amending the final rule by deleting the requirement for establishing a scrubber liquid minimum pH as an OPL for mercury control. Today's action does not change the requirements for hydrochloric acid and chlorine, however.

Part Three: Analytical and Regulatory Requirements

I. Executive Order 12866

Under Executive Order 12866, EPA must determine whether a regulatory action is significant and, therefore, subject to comprehensive review by the Office of Management and Budget (OMB), and the other provisions of the Executive Order. A significant regulatory action is defined by the Order as one that may:

—Have an annual effect on the economy of $100 million or more, or adversely affect in a material way the economy, a sector of the economy, productivity, competition, jobs, the environment, public health or safety, or State, local, or tribal governments or communities;
—Create a serious inconsistency or otherwise interfere with an action taken or planned by another agency;
—Materially alter the budgetary impact of entitlements, grants, user fees, or loan programs or rights and obligations or recipients thereof; or
—Raise novel legal or policy issues arising out of legal mandates, the President's priorities, or the principles set forth in Executive Order 12866.

Pursuant to the terms of Executive Order 12866, we have determined that this rule is a ''significant regulatory action'' because it may be considered significant under point four above: ''Raise novel legal or policy issues arising out of legal mandates, the President's priorities, or the principles set forth in Executive Order 12866.'' As such, this action was submitted to OMB for review. Changes made in response to OMB suggestions or recommendations will be documented in the public record.

The aggregate annualized compliance costs for this rule are estimated to be less than $100 million. Furthermore, this rule is not expected to adversely affect, in a material way, the economy, a sector of the economy, productivity, competition, jobs, the environment, public health or safety, or State, local, or tribal governments or communities. The benefits to human health and the environment resulting from today's final action have not been monetized but are deemed to be less than $100 million per year.

We have prepared two economic support documents for this action. These are: Assessment of Potential Costs, Benefits and Other Impacts NESHAP: Standards for Hazardous Air Pollutants for Hazardous Waste Combustors—Technical Amendments (Assessment), and, Regulatory Flexibility Screening Analysis (RFSA) For NESHAP: Standards for Hazardous Air Pollutants for Hazardous Waste Combustors—Technical Amendments. The Assessment addresses economic impacts of the thirteen direct final amendments to the September 30, 1999 final rule. The Assessment also briefly examines equity considerations and other impacts. The Regulatory Flexibility Screening Analysis (RFSA) briefly examines small entity impacts potentially resulting from this action. This Part presents a summary of findings from the Assessment and the RFSA documents. The complete Assessment and RFSA documents are available in the RCRA docket established for this action. Interested readers are encouraged to read these documents.

A. Why Is This Direct Final Rule Necessary?

The environmental regulations promulgated by EPA seek to correct market failures through the internalization of negative environmental externalities. That is not the case with today's rule. This action is necessary in order to clarify and improve compliance, testing and monitoring requirements, and general

implementation efficiency associated with the final rule NESHAP: Final Standards for Hazardous Air Pollutants for Hazardous Waste Combustors (64 FR 52828, September 30, 1999).

B. Were Non-Regulatory Alternatives First Considered?

Section 1(b)(3) of Executive Order 12866 instructs Executive Branch Agencies to consider and assess available alternatives to direct regulation prior to making a determination for regulation. This regulatory determination assessment should be considered, ''to the extent permitted by law, and where applicable.'' The ultimate purpose of the regulatory determination assessment is to ensure that the most efficient tool, regulation, or other type of action is applied in meeting the targeted statutory objective(s).

We have already employed education and outreach programs designed to help accomplish the objectives of the amendments in this rule. We believe that, at this point, a regulatory approach will ensure appropriate technical clarification and the necessary implementation efficiency designed to fully accomplish our objectives.

C. What Regulatory Options Were Considered?

This is a direct final action that does not facilitate the assessment of alternative regulatory options.

D. What Are the Potential Costs or Cost Savings of This Direct Final Rule?

The thirteen direct final amendments presented in today's action vary considerably in scope and substance. Many of the amendments are anticipated to result in minor to negligible incremental cost impacts (savings or increases) to both the regulated community and the Agency. Three of the amendments are expected to result in more substantive cost impacts to the regulated community. These findings are briefly summarized below. The Assessment document presents a detailed review of our methodology, data, findings, and analytical limitations.

1. Deletion of One-Time Notification of Compliance with Alternative Clean Air Act Standards (Amendment II)

In the final rule, a source that is not feeding hazardous waste when the hazardous waste residence time expires may elect to comply temporarily with alternative standards promulgated under the authority of sections 112 and 129 of the Clean Air Act. If a source chooses this option, § 63.1206(b)(1)(ii)(A) requires the source to submit to the Administrator a written, one-time notification documenting compliance with those requirements and standards. Since this stipulation duplicates requirements under title V of the CAA, such a requirement is redundant.

A deletion of this requirement reduces the administrative costs associated with compliance notification. Estimates of labor costs and administrative time spent on such a task suggest that about three hours per respondent would be saved. Out of this, two hours are estimated to be technical time (costed at a rate of $55 per hour), and one hour is likely to be management time (costed at $71 per hour). All facilities are likely to benefit from this exemption, thus leading to aggregate industry-wide cost savings of approximately $31,000 per year.

2. Alternative to the PM Standard for Incinerators Feeding Low Levels of Metals (Amendment VI)

The final rule established a particulate matter emission standard of 0.015 gr/dscf for new and existing sources as a surrogate for control of non-mercury CAA metal hazardous air pollutants (HAPs). The rule also offered an alternative particulate matter emission standard of 0.03 gr/dscf for sources that demonstrate the use of superior federate control of metals in their hazardous waste. Today, we are eliminating the alternative particulate matter emission standard and replacing it with metal emissions control requirements. As a result of this amendment, no particulate matter emissions standard would apply to the incinerator under Subpart EEE. However, the incinerator would remain subject to the RCRA particulate matter standard of 0.08 gr/dscf pursuant to § 264.343(c). In addition to the 0.08 gr/dscf standard, the alternative standard requires sources to comply with the following four requirements: (1) A metal emissions limitation for semivolatile and low volatile metals that applies to all CAA HAP metals, excluding mercury; (2) A requirement for the incinerator to demonstrate that it is using reasonable hazardous waste metal feedrate control, i.e., a defined metal feedrate that is better than the MACT defining metal feedrate floor control level; (3) A requirement for the incinerator to demonstrate that its air pollution control system achieves, at a minimum, a 90 percent system removal efficiency for semivolatile metals; and (4) A set of operating requirements pursuant to § 63.1209(n).

These four components collectively provide for MACT control of non-mercury CAA metal HAPs in the absence of a MACT particulate matter standard. Hence, we believe that while this amendment would provide some reduced regulatory requirements to industry, there would be no adverse impact on the environment or any associated social costs.

The cost savings resulting from this amendment will have two components: Savings in up-front capital costs and operation and maintenance cost savings. The capital cost savings would be a result of not needing a control device that meets MACT PM control standards (i.e., a control device that achieves 0.015 gr/dscf). The unit capital cost savings for the five sources that are expected to avail themselves of this standard in a given year are estimated to be $150,000. Annualizing this amount over ten years, using a discount rate of 7 percent, gives an annual savings of approximately $21,500 for capital costs per facility.

Operation and maintenance costs for a less complex system would amount to approximately $120,000 per year per facility. These savings arise from reductions in energy usage (pressure drop devices can be very energy intensive); lower solid waste handling costs, and reduced baghouse maintenance costs. Assuming that five facilities are able to take advantage of this alternative, the total cost savings per year associated with this amendment would be approximately $707,500. It is important to note that the exact number of facilities that will take advantage of this standard is difficult to determine and is likely to change over time.

3. Feedstream Analysis Requirements for Organic HAPs (Amendment VIII)

Section 63.1207(f)(1)(ii) requires sources to include in their site-specific plan for a comprehensive performance test an analysis of all Clean Air Act hazardous air pollutants that could reasonably be present in ''the feedstream.'' Regulators would use these analyses to ensure compliance with the destruction and removal efficiency standards of §§ 63.1203 through 63.1205.

However, upon further review, we believe that the comprehensive analyses required by § 63.1206(f)(1)(ii)(A) are not necessary in all cases to ensure compliance with the DRE standard. For example, if the source can demonstrate compliance with the DRE standard using POHCs that represent the most persistent organic compounds, a less rigorous analysis may be appropriate to address other concerns, such as whether

feedstream has changed to include additional organic HAPs that are fed at high concentrations or that are particularly toxic.

We are, therefore, amending § 63.1207(f)(1)(ii) to allow regulatory officials to waive the comprehensive analysis of organic compounds if sources can document that the POHCs used to demonstrate compliance with the DRE standard continue to be representative of the organic HAPs in hazardous waste feedstreams. This amendment will result in cost savings in operation and maintenance expenses, estimated at $4,000 per facility per year. With 45 facilities expected to be affected by this amendment per year, the total annual cost savings from this effort amount to approximately $180,000.

In addition to the cost savings of $918,500 identified above we estimate that two of the thirteen amendments would result in quantifiable cost burdens to industry and the regulatory agency and/or states. These amendments are projected to result in aggregate cost increases of approximately $8,700 per year. The net aggregate cost impact associated with the thirteen amendments is estimated to be $909,800 per year. This cost impact estimate will marginally decrease the total annual social cost projection of $50 to $63 million [25] estimated for compliance with the final rule. All cost impacts are dependant upon the regional enforcement regime.

II. Regulatory Flexibility Act (RFA), as Amended by the Small Business Regulatory Enforcement Fairness Act of 1996 (SBREFA), 5 U.S.C. 601 et seq.

The RFA generally requires an agency to prepare a regulatory flexibility analysis of any rule subject to notice and comment rulemaking requirements under the Administrative Procedure Act or any other statute, unless the agency certifies that the rule will not have a significant economic impact on a substantial number of small entities. Small entities include small businesses, small organizations, and small governmental jurisdictions.

For purposes of assessing the impacts of today's direct final rule on small entities, a small entity is defined as: (1) A small business that has fewer than 750, or 500 employees per firm depending upon the SIC code the firm is primarily classified in; (2) a small governmental jurisdiction that is a government of a city, county, town, school district or special district with a population of less than 50,000; or (3) a small organization that is any not-for-profit enterprise which is independently owned and operated and is not dominant in its field.

After considering the economic impacts of today's rule on small entities, I certify that this action will not have a significant economic impact on a substantial number of small entities. We have determined that only amendment II is likely to impact one or more of the six small hazardous waste combustors. Under our assumed worst-case scenario where the maximum cost impacts of this amendment ($31,000 savings) are attributed to only these six small sources, we find that no source would experience impacts beyond 0.14 percent of annual gross revenues.[26] This does not represent a significant economic impact.

Although this rule will not have a significant economic impact on a substantial number of small entities, we nonetheless tried to reduce the impact of this rule on small entities. Although not specifically directed toward small business outreach, we have met with industry representatives during the developmental phase and requested comment and suggestions on all aspects of this rulemaking. No small business concerns were brought up by these industry representatives.

We have completed the analysis: *Regulatory Flexibility Screening Analysis (RFSA) For NESHAP: Standards for Hazardous Air Pollutants for Hazardous Waste Combustors—Technical Amendments,* in support of the direct final rule. This RFSA document is available for review in the docket established for today's action.

III. Executive Order 13045: ''Protection of Children From Environmental Health Risks and Safety Risks''

''Protection of Children from Environmental Health Risks and Safety Risks'' (62 FR 19885, April 23, 1997) applies to any rule that: (1) Is determined to be ''economically significant'' as defined under Executive Order 12866, and (2) concerns an environmental health or safety risk that EPA has reason to believe may have a disproportionate effect on children. If the regulatory action meets both criteria, the Agency must evaluate the environmental health or safety effects of the planned rule on children, and explain why the planned regulation is preferable to other potentially effective and reasonably feasible alternatives considered by the Agency. This rule is not subject to the Executive Order because it is not economically significant as defined in Executive Order 12866. Furthermore, we do not have reason to believe that environmental health or safety risks addressed by this action present a disproportionate risk to children.

In addition, these amendments, as part of the HWC MACT standards, are exempt from the requirements of Executive Order 13045 because the final rule is a technology-based regulation rather than a risk-based one. Nevertheless, the amendments would not result in any incremental environmental harm that would affect children's health.

IV. Environmental Justice Executive Order 12898

Executive Order 12898, ''Federal Actions to Address Environmental Justice in Minority Populations and Low-Income Population'' (February 11, 1994), is designed to address the environmental and human health conditions of minority and low-income populations. EPA is committed to addressing environmental justice concerns and has assumed a leadership role in environmental justice initiatives to enhance environmental quality for all citizens of the United States. The Agency's goals are to ensure that no segment of the population, regardless of race, color, national origin, income, or net worth bears disproportionately high and adverse human health and environmental impacts as a result of EPA's policies, programs, and activities. In response to Executive Order 12898, and to concerns voiced by many groups outside the Agency, EPA's Office of Solid Waste and Emergency Response (OSWER) formed an Environmental Justice Task Force to analyze the array of environmental justice issues specific to waste programs and to develop an overall strategy to identify and address these issues (OSWER Directive No. 9200.3–17).

We have no data indicating that today's rule would result in disproportionately negative impacts on minority or low income communities.

V. Unfunded Mandates Reform Act

Title II of the Unfunded Mandates Reform Act of 1995 (UMRA), P.L. 104–4, establishes requirements for Federal agencies to assess the effects of their regulatory actions on State, local, and tribal governments and the private sector. Under section 202 of the UMRA,

[25] U.S. Environmental Protection Agency, Office of Solid Waste, ''Addendum to the Assessment of the Potential Costs, Benefits, and Other Impacts of the Hazardous Waste Combustion MACT Standards: Final Rule,'' July 23, 1999.

[26] Based on the July 1999 Assessment, we found that the smallest annual firm revenue associated with the six small facilities was $3.6 million. Dividing $31,000 by the six facilities results in approximately $5,200 maximum impact per small facility. ($5,200/$3.6 million = 0.14 percent).

EPA generally must prepare a written statement, including a cost-benefit analysis, for proposed and final rules with ''Federal mandates'' that may result in expenditures to State, local, and tribal governments, in the aggregate, or to the private sector, of $100 million or more in any single year. Before promulgating an EPA rule for which a written statement is needed, section 205 of the UMRA generally requires EPA to identify and consider a reasonable number of regulatory alternatives and adopt the least costly, most cost-effective or least burdensome alternative that achieves the objectives of the rule. The provisions of section 205 do not apply when they are inconsistent with applicable law. Moreover, section 205 allows EPA to adopt an alternative other than the least costly, most cost-effective or least burdensome alternative if the Administrator publishes with the final rule an explanation why that alternative was not adopted. Before EPA establishes any regulatory requirements that may significantly or uniquely affect small governments, including tribal governments, it must have developed under section 203 of the UMRA a small government agency plan. The plan must provide for notifying potentially affected small governments, enabling officials of affected small governments to have meaningful and timely input in the development of EPA regulatory proposals with significant Federal intergovernmental mandates, and informing, educating, and advising small governments on compliance with the regulatory requirements.

We have determined that this rule does not contain a Federal mandate that may result in expenditures of $100 million or more for State, local, and tribal governments, in the aggregate, or the private sector in any single year. It is estimated that the direct final amendments will result in increased costs to all states (or the Agency) of approximately $2,100 per year. Thus, today's rule is not subject to the requirements of sections 202 and 205 of the UMRA.

VI. Executive Order 13132 (Federalism)

Executive Order 13132, entitled ''Federalism'' (64 FR 43255, August 10, 1999), requires EPA to develop an accountable process to ensure ''meaningful and timely input by State and local officials in the development of regulatory policies that have federalism implications.'' ''Policies that have federalism implications'' are defined in the Executive Order to include regulations that have ''substantial direct effects on the States, on the relationship between the national government and the States, or on the distribution of power and responsibilities among the various levels of government.''

This rule does not have federalism implications. It will not have substantial direct effects on the States, on the relationship between the national government and the States, or on the distribution of power and responsibilities among the various levels of government, as specified in Executive Order 13132. This rule is projected to result in economic impacts to privately owned hazardous waste combustion facilities. Marginal administrative burden impacts may occur to selected States an/or EPA Regional Offices if these entities experience increased administrative needs, enforcement requirements, or information requests. However, this rule will not have substantial direct effects on the States, intergovernmental relationships, or the distribution of power and responsibilities. Thus, Executive Order 13132 does not apply to this rule.

VII. Consultation With Tribal Governments

Executive Order 13175, entitled ''Consultation and Coordination with Indian Tribal Governments'' (65 FR 67249, November 6, 2000), requires EPA to develop an accountable process to ensure ''meaningful and timely input by tribal officials in the development of regulatory policies that have tribal implications.'' ''Policies that have tribal implications'' is defined in the Executive Order to include regulations that have ''substantial direct effects on one or more Indian tribes, on the relationship between the Federal government and the Indian tribes, or on the distribution of power and responsibilities between the Federal government and Indian tribes.''

This final rule does not have tribal implications. It will not have substantial direct effects on tribal governments, on the relationship between the Federal government and Indian tribes, or on the distribution of power and responsibilities between the Federal government and Indian tribes, as specified in Executive Order 13175. Today's action will not significantly or uniquely affect the communities of Indian tribal governments, nor will it impose substantial direct compliance costs on them. Tribal communities are not known to own or operate any hazardous waste combustion facilities, nor are these communities disproportionately located adjacent to or near such facilities. Finally, tribal governments will not be required to assume any administrative or permitting responsibilities associated with this rule.

VIII. Paperwork Reduction Act

We have prepared an Information Collection Request (ICR) document (ICR No. 1773.03) listing the information collection requirements of this direct final rule, and have submitted it for approval to the Office of Management and Budget (OMB) under the provisions of the Paperwork Reduction Act, 44 U.S.C. 3501 *et seq.* OMB has assigned a control number 2050–0171 for this ICR. A copy of this ICR may be obtained from Sandy Farmer, OPIA Regulatory Information Division, U.S. Environment Protection Agency (2137), 1200 Pennsylvania Avenue NW., Washington DC 20460, or by calling (202) 260–2740.

Some of the amendments finalized today pertain to RCRA provisions of the rule (i.e., to 40 CFR parts 260 thru 271), and were covered under an earlier ICR No. 1361.08. Today's amendments to these RCRA provisions are all de-regulatory, and do not impose any burden on the regulated community. They only reduce the existing burden shown in that ICR. The ICR No. 1361.08 will be revised to show the reduced burden when the direct final rule is promulgated. The public burden associated with other provisions of this direct final rule (which are under the Clean Air Act) is projected to affect approximately 171 HWC units and is estimated to average 1.7 hours per respondent annually. The reporting and recordkeeping cost burden is estimated to average $118 per respondent annually. Burden means total time, effort, or financial resources expended by persons to generate, maintain, retain, disclose, or provide information to or for a Federal agency. That includes the time needed to review instructions; develop, acquire, install, and utilize technology and systems for the purposes of collecting, validating, and verifying information, processing and maintaining information, and disclosing and providing information; adjust the existing ways to comply with any previously applicable instructions and requirements; train personnel to be able to respond to a collection of information; search data sources; complete and review the collection of information; and transmit or otherwise disclose the information.

IX. National Technology Transfer and Advancement Act of 1995

Section 12(d) of the National Technology Transfer and Advancement Act of 1995 (''NTTAA''), Pub. L. No. 104–113, section 12(d) (15 U.S.C. 272 note) directs EPA to use voluntary

consensus standards in its regulatory activities unless to do so would be inconsistent with applicable law or otherwise impractical. Voluntary consensus standards are technical standards (e.g., materials specifications, test methods, sampling procedures, and business practices) that are developed or adopted by voluntary consensus standards bodies. The NTTAA directs EPA to provide Congress, through OMB, explanations when the Agency decides not to use available and applicable voluntary consensus standards.

This rulemaking does not involve technical standards. Therefore, we are not considering the use of any voluntary consensus standards.

X. The Congressional Review Act (5 U.S.C. 801 et seq., as Added by the Small Business Regulatory Enforcement Fairness Act of 1996)

The Congressional Review Act, 5 U.S.C. 801 et seq., as added by the Small Business Regulatory Enforcement Fairness Act of 1996, generally provides that before a rule may take effect, the agency promulgating the rule must submit a rule report, which includes a copy of the rule, to each House of the Congress and to the Comptroller General of the United States. EPA will submit a report containing this rule and other required information to the U.S. Senate, the U.S. House of Representatives, and the Comptroller General of the United States prior to publication of the rule in the **Federal Register**. A Major rule cannot take effect until 60 days after it is published in the **Federal Register**. This action is not a ''major rule'' as defined by 5 U.S.C. 804(2). This direct final rule will be effective on October 16, 2001 unless EPA receives adverse comment by August 17, 2001.

Part Four: State Authority

States can implement and enforce the new MACT standards through their delegated 112(l) CAA program and/or by having title V authority. A State's title V authority is independent of whether it has been delegated section 112(l) of the CAA. Additional information on state authority under the CAA may be found in the HWC MACT rule (64 FR at 52991).

List of Subjects

40 CFR Part 63

Environmental protection, Air pollution control, Hazardous substances, Reporting and recordkeeping requirements.

40 CFR Part 264

Environmental protection, Air pollution control, Hazardous waste, Insurance, Packaging and containers, Reporting and recordkeeping requirements, Security measures, Surety bonds.

Dated: June 18, 2001.

Christine Todd Whitman,

Administrator.

For the reasons set out in the preamble, title 40 of the Code of Federal Regulations is amended as follows:

PART 63—NATIONAL EMISSIONS STANDARDS FOR HAZARDOUS AIR POLLUTANTS FOR SOURCE CATEGORIES

1. The authority citation for part 63 continues to read as follows:

Authority: 42 U.S.C. 7401 *et seq.*

2. Section 63.1201 is amended by revising the definition of ''Hazardous waste residence time'' and adding the definition of ''Preheater tower combustion gas monitoring location'' to paragraph (a) in alphabetical order to read as follows:

§ 63.1201 Definitions and acronyms used in this subpart.

(a) * * *

Hazardous waste residence time means the time elapsed from cutoff of the flow of hazardous waste into the combustor (including, for example, the time required for liquids to flow from the cutoff valve into the combustor) until solid, liquid, and gaseous materials from the hazardous waste (excluding residues that may adhere to combustion chamber surfaces and excluding waste-derived recycled materials such as cement kiln dust and internally recycled metals) exit the combustion chamber. For combustors with multiple firing systems whereby the residence time may vary for the firing systems, the hazardous waste residence time for purposes of complying with this subpart means the longest residence time for any firing system in use at the time of the waste cutoff.

* * * * *

Preheater tower combustion gas monitoring location means a location within the preheater tower of a dry process cement kiln downstream (in terms of gas flow) of all hazardous waste firing locations and where a representative sample of combustion gas to measure combustion efficiency can be monitored.

* * * * *

3. Section 63.1206 is amended by:

a. Adding paragraph (a)(4).

b. Revising paragraphs (b)(1)(ii), (b)(6)(i), (b)(7)(i)(B), (b)(7)(ii)(B), (b)(8)(v), (b)(13)(i), and (b)(14).

c. Revising paragraph (c)(7)(ii).

The revisions and additions read as follows:

§ 63.1206 When and how must you comply with the standards and operating requirements?

(a) * * *

(4) *Early compliance*. If you choose to comply with the emission standards of this subpart prior to September 30, 2002, your compliance date is the date you postmark the Notification of Compliance under § 63.1207(j)(1).

(b) * * *

(1) * * *

(ii) When hazardous waste is not in the combustion chamber (i.e., the hazardous waste feed to the combustor has been cut off for a period of time not less than the hazardous waste residence time) and you have documented in the operating record that you are complying with all otherwise applicable requirements and standards promulgated under authority of sections 112 (e.g., subpart LLL of this part for cement kilns) or 129 of the Clean Air Act in lieu of the emission standards of §§ 63.1203 through 63.1205; the monitoring and compliance standards of this section and §§ 63.1207 through 63.1209, except the modes of operation requirements of § 63.1209(q); and the notification, reporting, and recordkeeping requirements of §§ 63.1210 through 63.1212.

* * * * *

(6) * * *

(i) If a DRE test performed prior to the compliance date is acceptable as documentation of compliance with the DRE standard, you may use the highest hourly rolling average hydrocarbon level achieved during the DRE test runs to document compliance with the hydrocarbon standard. An acceptable DRE test is any test for which the data and results are determined to meet quality assurance objectives (on a site-specific basis) such that the results adequately demonstrate compliance with the DRE standard.

* * * * *

(7) * * *

(i) * * *

(B) You may use any DRE test data that documents that your source achieves the required level of DRE provided:

(*1*) You have not modified the design or operation of your source in a manner that could effect the ability of your source to achieve the DRE standard since the DRE test was performed; and,

(*2*) The DRE test data meet quality assurance objectives determined on a site-specific basis.

(ii) * * *

(B) You may use any DRE test data that documents that your source achieves the required level of DRE provided:

(*1*) You have not modified the design or operation of your source in a manner that could affect the ability of your source to achieve the DRE standard since the DRE test was performed; and,

(*2*) The DRE test data meet the quality assurance objectives determined on a site-specific basis.

* * * * *

(8) * * *

(v) The particulate matter and opacity standards and associated operating limits and conditions will not be waived for more than 96 hours, in the aggregate, for a correlation test, including all runs of all test conditions, unless more time is approved by the Administrator.

* * * * *

(13) * * *

(i) Cement kilns that feed hazardous waste at a location other than the end where products are normally discharged and where fuels are normally fired must comply with the carbon monoxide and hydrocarbon standards of § 63.1204 as follows:

(A) For existing sources, you must not discharge or cause combustion gases to be emitted into the atmosphere that contain either:

(*1*) Hydrocarbons in the main stack in excess of 20 parts per million by volume, over an hourly rolling average (monitored continuously with a continuous emissions monitoring system), dry basis, corrected to 7 percent oxygen, and reported as propane; or

(*2*) Hydrocarbons both in the by-pass duct and at a preheater tower combustion gas monitoring location in excess of 10 parts per million by volume, at each location, over an hourly rolling average (monitored continuously with a continuous emissions monitoring system), dry basis, corrected to 7 percent oxygen, and reported as propane; or

(*3*) If the only firing location of hazardous waste upstream (in terms of gas flow) of the point where combustion gases are diverted into the bypass duct is at the kiln end where products are normally discharged, then both hydrocarbons at the preheater tower combustion gas monitoring location in excess of 10 parts per million by volume, over an hourly rolling average (monitored continuously with a continuous emissions monitoring system), dry basis, corrected to 7 percent oxygen, and reported as propane, and either hydrocarbons in the by-pass duct in excess of 10 parts per million by volume, over an hourly rolling average (monitored continuously with a continuous emissions monitoring system), dry basis, corrected to 7 percent oxygen, and reported as propane, or carbon monoxide in excess of 100 parts per million by volume, over an hourly rolling average (monitored continuously with a continuous emissions monitoring system), dry basis, and corrected to 7 percent oxygen. If you comply with the carbon monoxide standard of 100 parts per million by volume in the by-pass duct, then you must also not discharge or cause combustion gases to be emitted into the atmosphere that contain hydrocarbons in the by-pass duct in excess of 10 parts per million by volume, over an hourly rolling average (monitored continuously with a continuous emissions monitoring system), dry basis, corrected to 7 percent oxygen, and reported as propane, at any time during the destruction and removal efficiency (DRE) test runs or their equivalent as provided by § 63.1207(b)(7).

(B) For new sources, you must not discharge or cause combustion gases to be emitted into the atmosphere that contain either:

(*1*) Hydrocarbons in the main stack in excess of 20 parts per million by volume, over an hourly rolling average (monitored continuously with a continuous emissions monitoring system), dry basis, corrected to 7 percent oxygen, and reported as propane; or

(*2*)(*i*) Hydrocarbons both in the by-pass duct and at a preheater tower combustion gas monitoring location in excess of 10 parts per million by volume, at each location, over an hourly rolling average (monitored continuously with a continuous emissions monitoring system), dry basis, corrected to 7 percent oxygen, and reported as propane, and

(*ii*) Hydrocarbons in the main stack, if construction of the kiln commenced after April 19, 1996 at a plant site where a cement kiln (whether burning hazardous waste or not) did not previously exist, to 50 parts per million by volume, over a 30-day block average (monitored continuously with a continuous emissions monitoring system), dry basis, corrected to 7 percent oxygen, and reported as propane; or

(*3*)(*i*) If the only firing location of hazardous waste upstream (in terms of gas flow) of the point where combustion gases are diverted into the bypass duct is at the kiln end where products are normally discharged, then both hydrocarbons at the preheater tower combustion gas monitoring location in excess of 10 parts per million by volume, over an hourly rolling average (monitored continuously with a continuous emissions monitoring system), dry basis, corrected to 7 percent oxygen, and reported as propane, and either hydrocarbons in the by-pass duct in excess of 10 parts per million by volume, over an hourly rolling average (monitored continuously with a continuous emissions monitoring system), dry basis, corrected to 7 percent oxygen, and reported as propane, or carbon monoxide in excess of 100 parts per million by volume, over an hourly rolling average (monitored continuously with a continuous emissions monitoring system), dry basis, and corrected to 7 percent oxygen. If you comply with the carbon monoxide standard of 100 parts per million by volume in the by-pass duct, then you must also not discharge or cause combustion gases to be emitted into the atmosphere that contain hydrocarbons in the by-pass duct in excess of 10 parts per million by volume, over an hourly rolling average (monitored continuously with a continuous emissions monitoring system), dry basis, corrected to 7 percent oxygen, and reported as propane, at any time during the destruction and removal efficiency (DRE) test runs or their equivalent as provided by § 63.1207(b)(7).

(*ii*) If construction of the kiln commenced after April 19, 1996 at a plant site where a cement kiln (whether burning hazardous waste or not) did not previously exist, hydrocarbons are limited to 50 parts per million by volume, over a 30-day block average (monitored continuously with a continuous emissions monitoring system), dry basis, corrected to 7 percent oxygen, and reported as propane.

* * * * *

(14) *Alternative to the particulate matter standard for incinerators.* (i) *General.* In lieu of complying with the applicable particulate matter standard of § 63.1203(a)(7) or (b)(7), existing and new incinerators may elect to instead comply with the alternative metal emission control requirements described in paragraph (b)(14)(ii) or (b)(14)(iii) of this section, respectively.

(ii) *Alternative metal emission control requirements for existing incinerators.* (A) You must not discharge or cause combustion gases to be emitted into the atmosphere that contain lead, cadmium, and selenium in excess of 240 μg/dscm, combined emissions, corrected to 7 percent oxygen; and,

(B) You must not discharge or cause combustion gases to be emitted into the

atmosphere that contain arsenic, beryllium, chromium, antimony, cobalt, manganese, and nickel in excess of 97 μg/dscm, combined emissions, corrected to 7 percent oxygen; and,

(C) You must comply with the provisions specified in paragraph (b)(14)(iv) of this section.

(iii) *Alternative metal emission control requirements for new incinerators.* (A) You must not discharge or cause combustion gases to be emitted into the atmosphere that contain lead, cadmium, and selenium in excess of 24 μg/dscm, combined emissions, corrected to 7 percent oxygen; and,

(B) You must not discharge or cause combustion gases to be emitted into the atmosphere that contain arsenic, beryllium, chromium, antimony, cobalt, manganese, and nickel in excess of 97 μg/dscm, combined emissions, corrected to 7 percent oxygen; and,

(C) You must comply with the provisions specified in paragraph (b)(14)(iv) of this section.

(iv) *Other requirements.* Existing and new incinerators must document in the operating record that they meet the requirements of paragraph (b)(14)(iv)(A) through (C) of this section.

(A) The twelve-hour rolling average of the maximum theoretical emissions concentration for lead, cadmium, and selenium, combined, for the combined hazardous waste feedstreams to the incinerator, must not exceed:

(*1*) For existing incinerators, 1,325 μg/dscm.

(*2*) For new incinerators, 875 μg/dscm.

(B) The twelve-hour rolling average of the maximum theoretical emissions concentration for arsenic, beryllium, chromium, antimony, cobalt, manganese, and nickel, combined, for the combined hazardous waste feedstreams to the incinerator, must not exceed:

(*1*) For existing incinerators, 6,000 μg/dscm.

(*2*) For new incinerators, 3250 μg/dscm.

(C) You must document that your air pollution control system achieves at least a 90 percent system removal efficiency for semivolatile metals. In making this demonstration, you may spike semivolatile metals above the applicable levels of paragraph (b)(14)(iv)(A) or (B) of this section provided that the applicable alternative emission limitation of paragraph (b)(14)(ii)(A) or (iii)(A) of this section is attained during the test. This test may be performed independently of the comprehensive performance test and must be used to establish applicable operating parameter limits as described in § 63.1209(n), not including § 63.1209(n)(2), to ensure that a 90 percent semivolatile metal system removal efficiency is achieved during normal operations.

(v) *Operating limits.* (A) Semivolatile and low volatile metal operating parameter limits must be established to ensure compliance with the alternative emission limitations described in paragraphs (b)(14)(ii) and (iii) of this section pursuant to § 63.1209(n), except that semivolatile metal feedrate limits would apply to lead, cadmium, and selenium, combined, and low volatile metal feedrate limits would apply to arsenic, beryllium, chromium, antimony, cobalt, manganese, and nickel, combined.

(B) Twelve-hour rolling average hazardous waste metal feedrate limits required pursuant to paragraphs (b)(14)(iv)(A) and (B) of this section are based on the combined hazardous waste feedstreams to the incinerator and may be expressed either as an maximum theoretical emission concentration limit or as a restriction on maximum hazardous waste metals mass feedrate and minimum gas flow rate.

(C) For purposes of complying with the twelve-hour rolling average hazardous waste metal feedrate limits of paragraphs (b)(14)(iv)(A) and (B) of this section, non-detectable metal constituents in each hazardous waste feed must be assumed to be present at one-half the detection limit.

(c) * * *

(7) * * *

(ii) *Bag leak detection system requirements for baghouses at lightweight aggregate kilns and incinerators.* If you own or operate a hazardous waste incinerator or hazardous waste burning lightweight aggregate kiln equipped with a baghouse (fabric filter), you must continuously operate a bag leak detection system that meets the specifications and requirements of paragraph (c)(7)(ii)(A) of this section and you must comply with the corrective measures requirements of paragraph (c)(7)(ii)(B) of this section:

(A) *Bag leak detection system specification and requirements.* (*1*) The bag leak detection system must be certified by the manufacturer to be capable of continuously detecting and recording particulate matter emissions at concentrations of 1.0 milligram per actual cubic meter or less;

(*2*) The bag leak detection system shall provide output of relative particulate matter loadings;

(*3*) The bag leak detection system shall be equipped with an alarm system that will sound an audible alarm when an increase in relative particulate loadings is detected over a preset level;

(*4*) The bag leak detection system shall be installed and operated in a manner consistent with available written guidance from the U.S. Environmental Protection Agency or, in the absence of such written guidance, the manufacturer's written specifications and recommendations for installation, operation, and adjustment of the system;

(*5*) The initial adjustment of the system shall, at a minimum, consist of establishing the baseline output by adjusting the sensitivity (range) and the averaging period of the device, and establishing the alarm set points and the alarm delay time;

(*6*) Following initial adjustment, you must not adjust the sensitivity or range, averaging period, alarm set points, or alarm delay time, except as detailed in the operation and maintenance plan required under paragraph (c)(7)(i) of this section. You must not increase the sensitivity by more than 100 percent or decrease the sensitivity by more than 50 percent over a 365 day period unless such adjustment follows a complete baghouse inspection which demonstrates the baghouse is in good operating condition;

(*7*) For negative pressure or induced air baghouses, and positive pressure baghouses that are discharged to the atmosphere through a stack, the bag leak detector shall be installed downstream of the baghouse and upstream of any wet acid gas scrubber; and

(*8*) Where multiple detectors are required, the system's instrumentation and alarm system may be shared among the detectors.

(B) *Bag leak detection system corrective measures requirements.* The operating and maintenance plan required by paragraph (c)(7)(i) of this section must include a corrective measures plan that specifies the procedures you will follow in the case of a bag leak detection system alarm. The corrective measures plan must include, at a minimum, the procedures used to determine and record the time and cause of the alarm as well as the corrective measures taken to correct the control device malfunction or minimize emissions as specified in this paragraph. Failure to initiate the corrective measures required by this paragraph is failure to ensure compliance with the emission standards in this subpart.

(*1*) You must initiate the procedures used to determine the cause of the alarm within 30 minutes of the time the alarm first sounds; and

(*2*) You must alleviate the cause of the alarm by taking the necessary corrective

measure(s) which may include, but are not to be limited to, the following measures:

(*i*) Inspecting the baghouse for air leaks, torn or broken filter elements, or any other malfunction that may cause an increase in emissions;

(*ii*) Sealing off defective bags or filter media;

(*iii*) Replacing defective bags or filter media, or otherwise repairing th control device;

(*iv*) Sealing off a defective baghouse compartment;

(*v*) Cleaning the bag leak detection system probe, or otherwise repairing the bag leak detection system; or

(*vi*) Shutting down the combustor.

4. Section 63.1207 is amended by:

a. Revising paragraph (c)(2)(i).

b. Revising paragraphs (f)(1)(ii)(A), (f)(1)(ii)(B), (f)(1)(ii)(C), and (f)(1)(x)(C).

c. Revising paragraph (l)(1) introductory text.

d. Redesignating paragraph (f)(1)(xxvi) as (f)(1)(xxvii).

e. Adding paragraph (f)(1)(ii)(D).

f. Adding new paragraph (f)(1)(xxvi).

g. Removing paragraph (n).

The revisions and additions read as follows:

§ 63.1207 What are the performance testing requirements?

* * * * *

(c) * * *

(2) * * *

(i) You may request that previous emissions test data serve as documentation of conformance with the emission standards of this subpart provided that the previous testing:

(A) Results in data that meet quality assurance objectives (determined on a site-specific basis) such that the results adequately demonstrate compliance with the applicable standards;

(B) Was in conformance with the requirements of paragraph (g)(1) of this section; and,

(C) Was sufficient to establish the applicable operating parameter limits under § 63.1209.

* * * * *

(f) * * *

(1) * * *

(ii) * * *

(A) Except as provided by paragraph (f)(1)(ii)(D) of this section, an identification of such organic hazardous air pollutants that are present in each hazardous waste feedstream. You need not analyze for organic hazardous air pollutants that would reasonably not be expected to be found in the feedstream. You must identify any constituents you exclude from analysis and explain the basis for excluding them. You must conduct the feedstream analysis according to § 63.1208(b)(8);

(B) An approximate quantification of such identified organic hazardous air pollutants in the hazardous waste feedstreams, within the precision produced by analytical procedures of § 63.1208(b)(8); and

(C) A description of blending procedures, if applicable, prior to firing the hazardous waste feedstream, including a detailed analysis of the materials prior to blending, and blending ratios.

(D) The Administrator may approve on a case-by-case basis a hazardous waste feedstream analysis for organic hazardous air pollutants in lieu of the analysis required under paragraph (f)(1)(ii)(A) of this section if the reduced analysis is sufficient to ensure that the POHCs used to demonstrate compliance with the applicable DRE standard of § 63.1203, § 63.1204, or § 63.1205, continue to be representative of the organic hazardous air pollutants in your hazardous waste feedstreams;

* * * * *

(x) * * *

(C) Documentation that the level of spiking recommended during the performance test will mask sampling and analysis imprecision and inaccuracy to the extent that the extrapolated feedrate limits adequately assure compliance with the emission standards;

* * * * *

(xxvi) For purposes of calculating semivolatile metal, low volatile metal, mercury, and total chlorine (organic and inorganic), and ash feedrate limits, a description of how you will handle performance test feedstream analytical results that determines these constituents are not present at detectable levels.

* * * * *

(l) * * *

(1) *Comprehensive performance test.* The provisions of this paragraph do not apply to the initial comprehensive performance test if you conduct the test prior to September 30, 2002 (or a later compliance date approved under § 63.6(i).

* * * * *

5. Section 63.1209 is amended by:

a. Revising paragraph (b)(2)(ii).

b. Revising paragraph (l)(2).

The revisions read as follows:

§ 63.1209 What are the monitoring requirements?

* * * * *

(b) * * *

(2) * * *

(ii) *Accuracy and calibration of weight measurement devices for activated carbon injection systems.* If you operate a carbon injection system the accuracy of the weight measurement device must be ±1 percent of the weight being measured. The calibration of the device must be verified at least once every three months.

* * * * *

(1) * * *

(2) *Wet scrubber.* If your combustor is equipped with a wet scrubber, you must establish operating parameter limits prescribed by paragraph (o)(3) of this section, except for paragraph (o)(3)(iv).

* * * * *

6. Section 63.1211 is amended by revising paragraph (c)(1) to read as follows:

§ 63.1211 What are the record keeping and reporting requirements?

* * * * *

(c) * * *

(1) By the compliance date, you must develop and include in the operating record a Documentation of Compliance. You are not subject to this requirement, however, if you submit a Notification of Compliance under § 63.1207(j) prior to the compliance date.

* * * * *

PART 264—STANDARDS FOR OWNERS AND OPERATORS OF HAZARDOUS WASTE TREATMENT, STORAGE, AND DISPOSAL FACILITIES

7. The authority citation for part 264 continues to read as follows:

Authority: 42 U.S.C. 6905, 6912(a), 6924, and 6925.

8. Section 264.340 is amended by revising the first sentence of paragraph (b)(1) and adding paragraph (b)(3) to read as follows:

§ 264.340 Applicability.

* * * * *

(b) * * *

(1) Except as provided by paragraphs (b)(2) and (b)(3) of this section, the standards of this part no longer apply when an owner or operator demonstrates compliance with the maximum achievable control technology (MACT) requirements of part 63, subpart EEE of this chapter by conducting a comprehensive performance test and submitting to the Administrator a Notification of Compliance under §§ 63.1207(j) and 63.1210(d) of this chapter documenting compliance with the requirements of part 63, subpart EEE of this chapter.

* * *

(3) The particulate matter standard of § 264.343(c) remains in effect for incinerators that elect to comply with

the alternative to the particulate matter standard of § 63.1206(b)(14) of this chapter.

* * * * *

[FR Doc. 01–16425 Filed 7–2–01; 8:45 am]

BILLING CODE 6560–50–P

FEDERAL COMMUNICATIONS COMMISSION

47 CFR Part 36

[CC Docket No. 80–286; FCC 01–162]

Jurisdictional Separations Reform and Referral to the Federal-State Joint Board

AGENCY: Federal Communications Commission.

ACTION: Final rule; announcement of effective date.

SUMMARY: This document announces the effective date of the amendments to our rules for implementing a five-year interim ''Freeze'' of the jurisdictional separations process in order to simplify and stabilize the separations process pending more comprehensive separations reform. We believe these modifications will bring simplification and regulatory certainty to the separations process in a time of rapid market and technology changes, until the comprehensive reform is completed. The Report and Order in CC Docket No. 80–286 was published in the **Federal Register** on June 21, 2001. One of the rules contained information collection requirements.

DATES: Section 36.3(b), published at 66 FR 33202, June 21, 2001, was approved by the Office of Management and Budget (OMB) on June 22, 2001 and became effective on June 22, 2001.

FOR FURTHER INFORMATION CONTACT: Eric Einhorn or Andrew Firth, Common Carrier Bureau, Accounting Policy Division, (202) 418–7400, TTY: (202) 418–0484.

SUPPLEMENTARY INFORMATION: On May 21, 2001, the Commission released a Report and Order in CC Docket No. 80–286 (Order), 66 FR 33202, June 21, 2001, that took action in response to the Federal-State Joint Board on Jurisdictional Separations' recommended reforms to the jurisdictional separations process codified at part 36 of the Commission's rules, 47 CFR 36 *et seq.*, as a means to simplify and stabilize the separations process pending more comprehensive reform. Specifically, pending further reform, the Commission adopts a five-year freeze of all part 36 category relationships and jurisdictional allocation factors for price cap incumbent local exchange carriers, and a freeze of all allocation factors for rate-of-return incumbent local exchange carriers. The Commission believes these modifications will bring simplification and regulatory certainty to the separations process in a time of rapid market and technology changes, until comprehensive reform is completed. A summary of the Order was published in the **Federal Register**. See 66 FR 33202, June 21, 2001. One of the rules contained information collection requirements that required OMB approval. On June 22, 2001, OMB approved the information collections. See OMB No. 3060–0988. The rule amendments adopted by the Commission in the Order took effect on June 22, 2001. This publication satisfies the statement in the Order that the Commission would publish a document in the **Federal Register** announcing the effective date of that rule.

List of Subjects in 47 CFR Part 36

Jurisdictional separations, Reporting and recordkeeping requirements, Telecommunications, Telephone.

Federal Communications Commission.

Magalie Roman Salas,

Secretary.

[FR Doc. 01–16651 Filed 7–2–01; 8:45 am]

BILLING CODE 6712–01–P

FEDERAL COMMUNICATIONS COMMISSION

47 CFR PART 73

[DA 01–1239; MM Docket No. 01–37, RM–10065]

Radio Broadcasting Services; Houston and Anchorage, AK

AGENCY: Federal Communications Commission.

ACTION: Final rule; correction.

SUMMARY: The Federal Communications Commission published in the **Federal Register** of June 6, 2001, a document concerning the allotment of channels in the State of Alaska. In that Report and Order, the Commission inadvertently modified the license of Ubik Corporation, licensee of Station KNIK–FM, Anchorage, Alaska, to specify operation on Channel 286C1 in lieu of Channel 287C1. This document corrects that action to modify Station KNIK–FM to Channel 289C1, the correct channel.

EFFECTIVE DATES: July 2, 2001.

FOR FURTHER INFORMATION CONTACT: Victoria M. McCauley, Mass Media Bureau, and (202) 418–2180.

SUPPLEMENTARY INFORMATION: In FR Doc. 01–14017 published in the **Federal Register** of June 6, 2001, (66 FR 30335) Commission inadvertently modified the license of Ubik Corporation, licensee of Station KNIK–FM, Anchorage, Alaska, to specify operation on Channel 286C1 in lieu of Channel 287C1, rather than Channel 289C1, the correct channel.

In rule FR Doc. 01–14017, published on June 6, 2001 (66 FR 30335), make the following correction. On page 30335, in the preamble, in the first column, and in the amendment to § 73.202 in the second column, remove channel ''286C1'' and add ''289C1'' in its place.

Federal Communications Commission.

John A Karousos,

Chief, Allocation Branch, Policy and Rules Division, Mass Media Bureau.

[FR Doc. 01–16649 Filed 7–2–01; 8:45 am]

BILLING CODE 6712–01–U

FEDERAL COMMUNICATIONS COMMISSION

47 CFR Part 101

[WT Docket No. 97–81; FCC 01–171]

Multiple Address Systems

AGENCY: Federal Communications Commission.

ACTION: Final rule; petition for reconsideration; clarification.

SUMMARY: The document addresses four petitions for reconsideration and/or clarification of the *MAS Report and Order.* Specifically, the Commission responds to requests for reconsideration and/or clarification of issues relating to the types of services classified as private internal, shared use and private carrier service in the private internal bands, grandfathering provisions as they relate to transfers and assignments, service area coverage of the Gulf of Mexico, operational flexibility, and other minor points that help clarify its intentions for the MAS service. In addition, the Commission makes minor changes to certain technical requirements in part 101, as well as, the current application freeze in the 928/959 megahertz (MHz) MAS bands. In this document, the Commission grants two petitions and grants a third petition, in part. The fourth petition is dismissed as moot.

DATES: Effective September 4, 2001.

FOR FURTHER INFORMATION CONTACT: Shellie Blakeney at (202) 418–0680, Public Safety and Private Wireless Division, Wireless Telecommunications Bureau.

SUPPLEMENTARY INFORMATION:

1. This document is a summary of the Commission's *Memorandum Opinion and Order,* FCC 01–171 in WT Docket No. 97–81, adopted on May 22, 2001, and released on May 29, 2001. The full text of this *Memorandum Opinion and Order* is available for inspection and copying during normal business hours in the FCC Reference Center, Room CY–A257, 445 12th Street, S.W., Washington, D.C. The complete text may be purchased from the Commission's copy contractor, International Transcription Service, Inc., 1231 20th Street, N.W., Washington, D.C. 20037. The full text may also be downloaded at: *www.fcc.gov*. Alternative formats are available to persons with disabilities by contacting Jenifer Simpson at (202) 418–0008 or TTY (202) 418–2555.

Summary of the Memorandum Opinion and Order

2. The *Memorandum Opinion and Order* responds to four petitions for reconsideration and/or clarification of certain decisions in the *MAS Report and Order,* 65 FR 17445 (April 3, 2000). MAS consists of 3.2 MHz of electromagnetic spectrum in the 900 MHz band and is licensed under part 101 of the Commission's rules. The *Memorandum Opinion and Order:* (1) Will enable the MAS service to effectively accommodate the wireless communications needs of its various users. Overall, the decisions contained in the *MAS Memorandum Opinion and Order* will not only enable the Commission to better serve current and future MAS licensees, but will help conserve scarce Commission resources, thereby, advancing the Commission's spectrum management goals, including fostering efficient and effective radio operations.

3. Specifically, the Commission concludes that the type of service provided by Radscan, Inc. on MAS frequencies is a private internal use in the context of MAS. This clarification better explains the Commission's position with respect to the intended users of the private internal MAS bands and enhances the ability of current and future MAS licensees to acquire MAS spectrum. In addition, the Commission reinstates non-profit, cost-shared use in the private internal bands. The Commission believes that this type of spectrum use serves the public interest and affords a vital alternative for securing MAS spectrum in the highly encumbered private internal bands. Moreover, the Commission creates an EA-like area covering the Gulf of Mexico which will ensure that the wireless needs of this region are better met. With regard to the MAS operational policies, the Commission modifies some of the policies that were relaxed in the *MAS Report and Order,* 65 FR 17445 (April 3, 2000), and introduces policies that may be described as less flexible. However, the Commission believes that the changes to the operational policies mitigate potential instances of interference among MAS users and will ultimately benefit all MAS users.

Supplemental Final Regulatory Flexibility Analysis

4. As required by the Regulatory Flexibility Act (RFA), Initial Regulatory Flexibility Analyses (IRFA) were incorporated in the Amendment of the Commission's Rules Regarding Multiple Address Systems, *Notice of Proposed Rule Making,* 62 FR 11407 (March 12, 1997) and *Further Notice of Proposed Rule Making,* 64 FR 38617 (July 19, 1999). The Commission sought written public comment on the proposals in the *Notice and Further Notice,* 62 FR 11407 (March 12, 1997) and 64 FR 38617 (July 19, 1999) including comment on the IRFA. This present Supplemental Final Regulatory Flexibility Analysis (Supplemental FRFA) conforms to the RFA.

I. Reason for, and Objectives of, the Memorandum Opinion and Order

5. These proceedings were initiated to secure public comment on proposals to maximize the efficient and effective use of spectrum allocated to MAS in the Microwave Services and to analyze the impact of the Balanced Budget Act on these proposals. The rules adopted in this *Memorandum Opinion and Order* continue the Commission's efforts to promote effective radio operations, improve the efficiency of spectrum use and reduce the regulatory burden on spectrum users.

II. Summary of Significant Issues Raised by Public Comments in Response to the Previous Final Regulatory Flexibility Analysis

6. No reconsideration petitions/comments were filed in direct response to the previous Final Regulatory Flexibility Analysis (FRFA). However, the Commission has reviewed general comments that may impact small businesses. In this instance, the petitioners are existing MAS licensees, many of whom qualify as small businesses. Generally, the petitioners applaud the Commission's efforts in this service. The requests for reconsideration and/or clarification involve issues relating to the types of services classified as private internal, grandfathering provisions as they relate to transfers and assignments, shared use and private carrier service in the private internal bands, operational flexibility, service area coverage of the Gulf of Mexico and other minor points that will help clarify the Commission's intentions for this service. In addition, this *Memorandum Opinion and Order* makes minor changes to certain technical requirements in part 101, as well as, the current application freeze in certain MAS bands in an effort to promote effective radio operations and to reduce regulatory burdens on MAS licensees.

III. Description and Estimate of the Number of Small Entities To Which the Rules Will Apply

7. The RFA directs agencies to provide a description of and, where feasible, an estimate of the number of small entities that may be affected by the proposed rules, if adopted. The RFA generally defines the term ''small entity'' as having the same meaning as the terms ''small business,'' ''small organization,'' and ''small governmental jurisdiction.'' In addition, the term ''small business'' has the same meaning as the term ''small business concern'' under the Small Business Act, unless the Commission has developed one or more definitions that are appropriate for its activities. Under the Small Business Act, a ''small business concern'' is one that: (1) Is independently owned and operated; (2) is not dominant in its field of operation; and (3) satisfies any additional criteria established by the Small Business Administration (SBA). A small organization is generally ''any not-for-profit enterprise which is independently owned and operated and is not dominant in its field.''

8. Last, the definition of ''small governmental entity'' is one with populations of fewer than 50,000. There are 85,006 governmental entities in the nation. This number includes such entities as states, counties, cities, utility districts and school districts. There are no figures available on what portion of this number has populations of fewer than 50,000. However, this number includes 38,978 counties, cities and towns, and of those, 37,556, or ninety-six percent, have populations of fewer than 50,000. The Census Bureau estimates that this ratio is approximately accurate for all government entities. Thus, of the 85,006 governmental entities, the Commission estimates that ninety-six percent, or about 81,600, are small entities that may be affected by the rules. The Commission describes and estimates the number of small business licensees and

regulatees that may be affected by the rules.

9. The rules adopted in this *Memorandum Opinion and Order* affect a number of small entities that are either licensees, or may choose to become applicants for licenses, in the MAS Service. Such entities, in general, fall into two categories: (1) Those using MAS spectrum for profit-based uses and (2) those using MAS spectrum for private internal uses.

10. With respect to the first category, the Commission has developed and received approval from the Small Business Administration for two definitions of small entities applicable to MAS licensees that do not provide private internal service. The majority of these entities will most likely be licensed in bands where the Commission has implemented a geographic area licensing approach that would require the use of competitive bidding procedures to resolve mutually exclusive applications. The Commission's licensing database indicates that, as of January 20, 1999, there were a total of 8,670 MAS station authorizations. Of these, 260 authorizations were associated with common carrier service.

11. With respect to the second category, which consists of entities that use, or seek to use, MAS spectrum to accommodate their own internal communications needs, the Commission notes that MAS serves an essential role in a range of industrial, safety, business, and land transportation activities. MAS radios are used by companies of all sizes, operating in virtually all U.S. business categories, and by all types of public safety entities. For the majority of private internal users, the definitions developed by the SBA would be more appropriate. The applicable definition of small entity in this instance appears to be the definition under the SBA rules applicable to establishments engaged in radiotelephone communications. This definition provides that a small entity is any entity employing no more than 1,500 persons. The Commission's licensing database indicates that, as of January 20, 1999, of the 8,670 total MAS station authorizations, 8,410 authorizations were for private radio service, and of these, 1,433 were for private land mobile radio service.

IV. Description of Projected Reporting, Recordkeeping, and Other Compliance Requirements

12.This *Memorandum Opinion and Order* requires MAS licensees that are operating in the MAS spectrum designated for private internal use to limit mobile operations to mobile master stations only, for the 952 MHz and certain channels in the 941 MHz bands, if frequencies in the 956 MHz band are unavailable. In addition, the *Memorandum Opinion and Order* prohibits mobile operation for site-based licensees in the 959 MHz band and modifies permissible frequency tolerance levels for MAS operations to conform with the *MAS Report and Order,* 65 FR 17445 (April 3, 2000). Compliance with these modifications to the Commission's rules, as well as the other modifications described in the *MAS Memorandum Opinion and Order,* will facilitate efficient radio operations by reducing opportunities for radio interference.

V. Steps Taken to Minimize Significant Economic Impact on Small Entities, and Significant Alternatives Considered

13. The Commission has reduced the economic burden placed on small businesses where possible. In response to petitions/comments filed in this proceeding, the Commission has adopted rule modifications that will, through more effective radio operations and a reduction of regulatory burdens, foster the growth of small businesses providing wireless services. For instance, this *Memorandum Opinion and Order* eliminates the requirement for licensees to submit waiver requests (1) to operate mobile master stations in certain MAS bands and (2) to expand systems in the 928/959 MHz MAS bands as described in the Commission's rules. This action, in turn, will reduce administrative burdens for MAS licensees, as well as, the Commission, which will ultimately result in less economic burden on MAS licensees. Additionally, the Commission is providing specific parameters for mobile operations in this service which will assist small businesses by mitigating instances of potential interference, thus preserving valuable resources.

Report to Congress: The Commission will send a copy of the *MAS Memorandum Opinion and Order,* including this Supplemental FRFA, in a report to be sent to Congress pursuant to the Small Business Enforcement Fairness Act of 1996. In addition, the Commission will send a copy of the MAS *Memorandum Opinion and Order*, including the Supplemental FRFA, to the Chief Counsel for Advocacy of the Small Business Administration. A copy of the *MAS Memorandum Opinion and Order* and Supplemental FRFA (or summaries thereof) will also be published in the **Federal Register**.

14. Accordingly, *It is Ordered* that, pursuant to the authority contained in Sections 4(i) and 303 of the Communications Act of 1934, as amended, 47 U.S.C. 154(i) and 303, and § 1.429 of the Commission's rules, 47 CFR 1.429, the Petition for Reconsideration filed by CellNet Data Systems, Inc. on May 3, 2000, is *Granted in Part* consistent with the decisions set forth herein.

15. *It is Further Ordered* that, pursuant to the authority contained in sections 4(i) and 303 of the Communications Act of 1934, as amended, 47 U.S.C. 154(i) and 303, and § 1.429 of the Commission's rules, 47 CFR 1.429, the Petition for Clarification and Reconsideration filed by Radscan, Inc. on May 3, 2000 is *Granted,* consistent with the decisions set forth herein.

16. *It is Further Ordered* that, pursuant to the authority contained in sections 4(i) and 303 of the Communications Act of 1934, as amended, 47 U.S.C. 154(i) and 303, and § 1.429 of the Commission's rules, 47 CFR 1.429, the Petition for Reconsideration/Clarification filed by the Critical Infrastructure Communications Coalition on May 3, 2000, is *Granted,* consistent with the decisions set forth herein.

17. *It is Further Ordered* that, pursuant to the authority contained in sections 4(i) and 303 of the Communications Act of 1934, as amended, 47 U.S.C. 154(i) and 303, and § 1.429 of the Commission's rules, 47 CFR 1.429, the Petition for Reconsideration/Clarification filed by the United States Environmental Protection Agency on February 7, 2000, is *Dismissed, as* moot.

18. *It is Further Ordered* that, pursuant to the authority contained in section 4(i) of the Communications Act of 1934, as amended, 47 U.S.C. 154(i), the application freeze set forth in the *Notice of Proposed Rule Making*, 62 FR 11407 (March 12, 1997), in WT Docket No. 97–81, is *Modified,* as set forth herein.

19. *It is Further Ordered* that, part 101 of the Commission's rules is AMENDED, as set forth in Rule Changes, effective sixty days after its publication in the **Federal Register**.

20. *It is Further Ordered* that the Commission's Consumer Information Bureau, Reference Information Center, Shall Send a copy of this *Memorandum Opinion and Order*, including the Supplemental Final Regulatory Flexibility Analysis, to the Chief Counsel for Advocacy of the Small Business Administration.

21. *It is Further Ordered* that the above-captioned proceeding is *Terminated.*

List of Subjects in 47 CFR Part 101

Communications equipment, Radio, Reporting and recordkeeping requirements.

Federal Communications Commission.

Magalie Roman Salas,

Secretary.

Rule Changes

For reasons discussed in the preamble, the Federal Communications Commission amends 47 CFR part 101 as follows:

PART 101—FIXED MICROWAVE SERVICES

1. The authority citation for part 101 is amended to read as follows:

Authority: 47 U.S.C. 154, 303.

2. Section 101.105 is amended by revising (c)(5) to read as follows:

§ 101.105 Interference protection criteria.

* * * * *

(c) * * *

(5) Multiple address frequencies in the 956.25–956.45 MHz bands may be assigned for use by mobile master stations on a primary basis. Multiple address frequencies in the 941.0–941.5 MHz bands that are licensed on a site-by-site basis and the 952 MHz bands may be assigned for use by primary mobile master stations on a case-by-case basis if the 956.25–956.45 MHz frequencies are unavailable. Multiple address mobile (master and remote) operation is permitted on frequencies licensed by geographic area subject to the interference protection criteria set forth in § 101.1333, *i.e.,* adjacent channel site-based licensees and co-channel operations in adjacent EAs. Mobile operation in the 959.85–960 MHz band is not permitted.

* * * * *

3. Section 101.107(a) is amended by revising the table and revising footnotes (5) and (7) to read as follows:

§ 101.107 Frequency tolerance.

(a) * * *

Frequency (MHz)	Frequency Tolerance (percent)		
	All fixed and base stations	Mobile stations over 3 watts	Mobile stations 3 watts or less
928 to 929 (2)(5)	0.0005		
932 to 932.5 (2)(5)	0.00015		
*	*	*	*

* * * * * * *

(5) Used for remote stations. For remotes with 12.5 KHz bandwidth or less, the tolerance is ±0.00015%. Remote mobiles are only allowed in the portion of the 932–932.5 MHz band that is licensed by geographic area.

* * * * * * *

(7) For private operational fixed point-to-point microwave systems, with a channel greater than or equal to 50 KHz bandwidth, ±0.0005%; for multiple address master stations, regardless of bandwidth, ±0.00015%; for multiple address remote stations with 12.5 KHz bandwidths or less, ±0.00015%; for multiple address remote stations with channels greater than 12.5 KHz bandwidth, ±0.0005%.

* * * * * * *

4. Section 101.113(a) is amended by revising the first six rows as follows:

§ 101.113 Transmitter power limitations.

(a) * * *

Frequency Band (MHz)	Maximum allowable EIRP (1)(2)	
	Fixed (dBW)	Mobile (dBW)
928.0–929.0(2)	+17	
932.0–932.5(2)	+17	
932.5–935.0	+40	
941.0–941.5(2)	+30	+14
941.5–944.0	+40	
952.0–960.0(2)	+40	+14
*	*	*

* * * * *

5. Section 101.135 is amended by revising paragraph (e) to read as follows:

§ 101.135 Shared use of radio stations and the offering of private carrier service.

* * * * *

(e) Applicants licensed in the MAS frequencies after June 2, 2000, shall not provide service to others on a for-profit private carrier basis in the 928–928.85/952–952.85/956.25–956.45 MHz bands and the 932.25–932.5/941.25–941.5 MHz bands.

6. Section 101.147 is amended by revising note (28) in paragraph (a) and revising paragraph (b) introductory text to read as follows:

§ 101.147 Frequency assignments.

(a) * * *

(28) Licensees that obtain authorizations in the 928/952/956 MHz MAS bands subsequent to July 1, 1999 are limited to private internal services, as defined in § 101.1305. Incumbent operations in the 928/952/956 MHz MAS bands, as defined in § 101.1331(a), are subject to grandfather rights pursuant to § 101.1331. The 928.85–929.0 MHz and 959.85–960.0 MHz bands are licensed on a geographic area basis with no eligibility restrictions. The 928.0–928.85 MHz band paired with the 952.0–952.85 MHz band, in addition to unpaired frequencies in the 956.25–956.45 MHz band, are licensed on a site-by-site basis and used for terrestrial point-to-point and point-to-multipoint fixed and limited mobile operations. The 928.85–929.0 MHz band paired with the 959.85–960.0 MHz band is licensed by Economic Area and used for terrestrial point-to-point and point-to-multipoint fixed operations.

* * * * *

(b) Frequencies normally available for assignment in this service are set forth with applicable limitations in the following tables: 928–960 MHz Multiple address system (MAS) frequencies are available for the point-to-multipoint and

point-to-point transmission of a licensee's products or services, excluding video entertainment material, to a licensee's customer or for its own internal communications. The paired frequencies listed in this section are used for two-way communications between a master station and remote stations. Ancillary one-way communications on paired frequencies are permitted on a case-by-case basis. Ancillary communications between interrelated master stations are permitted on a secondary basis. The normal channel bandwidth assigned will be 12.5 kHz. EA licensees, however, may combine contiguous channels without limit or justification. Site-based licensees may combine contiguous channels up to 50 kHz, and more than 50 kHz only upon a showing of adequate justification. Any bandwidth (12.5 kHz, 25 kHz or greater) authorized in accordance with this section may be subdivided into narrower bandwidths to create additional (or sub) frequencies without the need to specify each discrete frequency within the specific bandwidth. Equipment that is used to create additional frequencies by narrowing bandwidth (whether authorized for a 12.5 kHz, 25 kHz or greater bandwidth) will be required to meet, at a minimum, the ± 0.00015 percent tolerance requirement so that all subfrequencies will be within the emission mask. Systems licensed for frequencies in these MAS bands prior to August 1, 1975, may continue to operate as authorized until June 11, 1996, at which time they must comply with current MAS operations based on the 12.5 kHz channelization set forth in this paragraph. Systems licensed between August 1, 1975, and January 1, 1981, inclusive, are required to comply with the grandfathered 25 kHz standard bandwidth and channelization requirements set forth in this paragraph. Systems originally licensed after January 1, 1981, and on or before May 11, 1988, with bandwidths of 25 kHz and above, will be grandfathered indefinitely.

* * * * *

7. Section 101.1307 is revised to read as follows:

§ 101.1307 Permissible communications.

MAS users may engage in terrestrial point-to-point and point-to-multi-point fixed and limited mobile operations.

8. Section 101.1315 is revised to read as follows:

§ 101.1315 Service areas.

In the frequency bands not licensed on a site-by-site basis, the geographic service areas for MAS are Economic Areas (EAs) which are defined by the Department of Commerce's Bureau of Economic Analysis, as modified by the Commission. The EAs will consist of 176 areas, which includes Guam and the Northern Marianas Islands, Puerto Rico and the United States Virgin Islands, American Samoa, and the Gulf of Mexico.

9. Section 101.1331 is amended by revising paragraphs (a) and (b) to read as follows:

§ 101.1331 Treatment of incumbents.

(a) Any MAS station licensed by the Commission prior to July 1, 1999 in the 928.0–928.85 MHz/952.0–952.85 MHz/956.25–956.45 MHz and 928.85–929.0 MHz/959.85–960.0 MHz bands, as well as assignments or transfers of such stations approved by the Commission and consummated as of January 19, 2000, shall be considered incumbent.

(b) Incumbent operators in the 928.0–928.85 MHz/952.0–952.85 MHz/956.25–956.45 MHz bands are grandfathered as of January 19, 2000, and may continue to operate and expand their systems pursuant to the interference protection and co-channel spacing criteria contained in § 101.105.

(1) MAS operators are prohibited from acquiring additional frequencies in the 928.0–928.85 MHz/952.0–952.85 MHz/956.25–956.45 MHz bands and the 932.25625–932.49375 MHz/941.25625–941.49375 MHz bands for the purpose of expanding private carrier service and from changing the use of their frequencies in any manner that is inconsistent with this part. Refer to § 101.147 for designated uses.

(2) Incumbent operators in the 928.0–928.85 MHz/952.0–952.85 MHz/956.25–956.45 MHz bands will include incumbents as defined in § 101.1331(a), as well as, their transferees and/or assignees and the successors of the transferees and/or assignees and retain their grandfathered status, provided that the use of the MAS frequencies remains unchanged from that of the transferor and/or assignor of the license.

* * * * *

[FR Doc. 01–16650 Filed 7–2–01; 8:45 am]

BILLING CODE 6712–01–P

Proposed Rules

Federal Register
Vol. 66, No. 128
Tuesday, July 3, 2001

This section of the FEDERAL REGISTER contains notices to the public of the proposed issuance of rules and regulations. The purpose of these notices is to give interested persons an opportunity to participate in the rule making prior to the adoption of the final rules.

DEPARTMENT OF AGRICULTURE

Food Safety and Inspection Service

9 CFR Parts 301, 303, 317, 318, 319, 320, 325, 331, 381, 417, and 430

[Docket No. 97–013N2]

Performance Standards for the Production of Processed Meat and Poultry Products; Reopening of Comment Period

AGENCY: Food Safety and Inspection Service, USDA.

ACTION: Proposed rule; reopening and extension of comment period.

SUMMARY: The Food Safety and Inspection Service (FSIS) is reopening and extending until September 10, 2001, the comment period for the proposed regulations concerning ready-to-eat and partially heat-treated meat and poultry products that closed on June 28, 2001. As of June 28, 2001. As of June 28, 2001, FSIS is reopening and extending the comment period in response to a request from a consortium of trade associations.

DATES: Comments on the proposed regulations must be received on or before September 10, 2001.

ADDRESSES: Send all written comments on the proposed regulations to: FSIS Docket No. 97–013P, Department of Agriculture, Food Safety and Inspection Service, Room 102, 300 12th Street, SW., Washington, DC 20250–3700. All comments received will be considered part of the public record and will be available for viewing in the Docket Room between 8:30 a.m. and 4:30 p.m. Monday through Friday.

FOR FURTHER INFORMATION CONTACT: Daniel Engeljohn, Ph.D., Director, Regulations Development and Analysis Division, Office of Policy, Program Development, and Evaluation, Food Safety and Inspection Service, Room 112 Cotton Annex, 300 12th Street, SW, Washington, DC 20250. Telephone number (202) 720–5627, fax number (202) 690–0486.

SUPPLEMENTARY INFORMATION: On February 27, 2001, FSIS published a proposed rule ''Performance Standards for the Production of Processed Meat and Poultry Products'' (66 FR 12590). In that document, the Agency proposed food safety performance standards applicable to all ready-to-eat and all partially heat-treated meat and poultry products, as well as environmental testing requirements intended to reduce the incidence of *Listeria monocytogenes* in RTE meat and poultry products. FSIS also proposed to convert to performance standards the existing regulatory requirements for thermally-processed, commercially sterile (most often canned) meat and poultry products and to rescind certain requirements requiring the elimination of trichina from products that contain pork.

FSIS originally provided for a 90-day comment period on the proposed regulations ending on May 29, 2001. On April 13, 2001 (66 FR 19102), FSIS extended the comment period an additional 30 days, through June 28, 2001, to provide opportunity for the public to comment on issues raised at the technical conference and public meetings concerning the proposed regulations, which were held May 8 through 10, 2001. As of June 28, 2001, FSIS is reopening and again extending the comment period on the proposed regulations, this time until September 10, 2001.

On May 22, 2001, a consortium of trade associations representing the meat and poultry industries requested that FSIS extend the comment period for 120 days, until October 28, 2001. The consortium noted that FSIS has solicited a great deal of scientific and economic data regarding the proposed regulations and stated that it needed additional time to provide this data. The consortium also requested additional time to review the draft compliance guidance for the regulations, distributed by FSIS at the May 9 and 10 public meetings, as well as the draft risk assessment on the relationship between foodborne *L. monocytogenes* and human health developed by the Food and Drug Administration in cooperation with FSIS and the Centers for Disease Control and Prevention.

FSIS agrees that additional time is necessary for regulated industries, consumers, and other interested parties to submit comments, collect and submit the solicited data, and review the related draft compliance guidance and risk assessment documents. FSIS is reopening and extending the comment period until September 10, 2001, which will provide additional time for comments to be made, while ensuring that the rulemaking proceeds in a timely manner. As a result of this reopening and extension, the comment period for the proposed regulations will total 195 days.

Thomas J. Billy,
Administrator.

[FR Doc. 01–16618 Filed 6–27–01; 4:09 pm]

BILLING CODE 3410–DM–P

DEPARTMENT OF THE TREASURY

Internal Revenue Service

26 CFR Part 1

[REG–113910–98]

RIN 1545–AW54

Special Rules Regarding the Simplified Production and Simplified Resale Methods With Historic Absorption Ratio Election

AGENCY: Internal Revenue Service (IRS), Treasury.

ACTION: Withdrawal of notice of proposed rulemaking.

SUMMARY: This document withdraws the notice of proposed rulemaking requiring that a historic absorption ratio used with either the simplified production or simplified resale methods be recalculated when the ratio becomes materially inaccurate that was published in the **Federal Register** on May 24, 1999. The withdrawal is in response to written comments received, oral comments presented at a public hearing and an internal IRS survey.

FOR FURTHER INFORMATION CONTACT: Cheryl Oseekey, (202) 622–4970 (not a toll-free number).

SUPPLEMENTARY INFORMATION:

Background

On May 24, 1999, the IRS issued proposed regulations (REG–113910–98) in the **Federal Register** (64 FR 27936) under section 263A, that required that the historic absorption ratio used with either the simplified production or simplified resale methods be reviewed

for accuracy. If the historic absorption ratio is found to be materially inaccurate, the ratio could no longer be used. The proposed regulations defined an historic absorption ratio as being materially inaccurate when (1) the taxpayer's actual absorption ratio deviates by more than 50 percent from the taxpayer's historic absorption ratio, (2) the taxpayer's actual absorption ratio deviates by more than one-half of one percentage point from the taxpayer's historic absorption ratio, and (3) the amount of additional section 263A costs capitalizable to items on hand at year-end using the actual absorption ratio deviates by more than $100,000 from the amount of additional section 263A costs capitalizable to items on hand at year-end using the historic absorption ratio. In response to the written comments received and the oral comments presented at a public hearing held on September 1, 1999, and based on an internal IRS survey, it has been determined that the potential for abuse using the current regulations' rule of reviewing a historic absorption ratio every six years is small. Further, this potential for abuse is outweighed by the burden that would be placed on taxpayers by requiring an annual review of the accuracy of their ratios. Accordingly, these proposed regulations are being withdrawn.

List of Subjects in 26 CFR Part 1

Income taxes, Reporting and recordkeeping requirements.

Withdrawal of Notice of Proposed Rulemaking

Accordingly, under the authority of 26 U.S.C. 7805, the notice of proposed rulemaking (REG–113910–98) that was published in the **Federal Register** on May 24, 1999 (64 FR 27936) is withdrawn.

Robert E. Wenzel,

Deputy Commissioner of Internal Revenue Service.

[FR Doc. 01–16717 Filed 7–2–01; 8:45 am]

BILLING CODE 4830–01–P

DEPARTMENT OF LABOR

Occupational Safety and Health Administration

29 CFR Part 1904

[Docket No. R–02A]

RIN 1218–AC00

Occupational Injury and Illness Recording and Reporting Requirements

AGENCY: Occupational Safety and Health Administration (OSHA), U.S. Department of Labor.

ACTION: Proposed delay of effective date; request for comments.

SUMMARY: The Occupational Safety and Health Administration (OSHA) issued a final rule on Occupational Injury and Illness Recording and Reporting Requirements (66 FR 5916, January 19, 2001), which is scheduled to become effective on January 1, 2002. Following a careful review conducted pursuant to White House Chief of Staff Andrew Card's memorandum (66 FR 7702), the Agency has determined that all but a few of the provisions of the final rule should take effect as scheduled.

OSHA has also determined that it will reconsider the provisions in the final rule for: recording occupational hearing loss based on the occurrence of a Standard Threshold Shift (STS) in hearing acuity (Section 1904.10); and defining ''musculoskeletal disorder'' (MSD) and checking the column on the OSHA 300 Log identifying a recordable MSD (Section 1904.12). Accordingly, OSHA proposes to delay the effective date of Sections 1904.10 and 1904.12 until January 1, 2003. Employers should read carefully Section II. of this document, Effect of Proposal Delay on Employer Recordkeeping Obligations in Calendar Year 2002, to understand what their recordkeeping obligations would be during the period January 1, 2002 through January 1, 2003 if the proposed delay takes effect. OSHA is also asking for comment on the appropriate criteria for recording hearing loss cases. See Section III.

DATES: Written comments must be postmarked by September 4, 2001.

ADDRESSES: Comments are to be submitted in writing in triplicate. All comments shall be submitted to: Docket Officer, Docket No. R–02A, Occupational Safety and Health Administration, Room N–2625, U.S. Department of Labor, 200 Constitution Avenue, NW., Washington, DC 20210, telephone (202) 693–2350 (OSHA's TTY number is (877) 889–5627). Comments of 10 pages or less may be faxed to (202) 693–1648. You may also submit your comments electronically through OSHA's home page at *www.osha.gov*. Please note that you may not attach materials such as studies or journal articles to your electronic statement. If you wish to include such materials, you must submit three copies to the OSHA Docket Office at the address listed above. When submitting such materials to the OSHA Docket Office, you must clearly identify your electronic statement by name, date, and subject, so that we can attach the materials to your electronically submitted statement.

FOR FURTHER INFORMATION CONTACT: Jim Maddux, Occupational Safety and Health Administration, U.S. Department of Labor, Directorate of Safety Standards Programs, Room N–3609, 200 Constitution Avenue, NW., Washington, DC 20210. Telephone (202) 693–2222.

SUPPLEMENTARY INFORMATION: Because OSHA's final recordkeeping rule was published on January 19, 2001, with an effective date of January 1, 2002, it was subject to the regulatory review required by the Andrew Card memorandum. The Agency has carefully considered the rulemaking record and the submissions of interested parties, and has had several meetings with business and labor representatives. As a result of this process, the Secretary has determined that the final recordkeeping rule should be implemented in large part, on January 1, 2002, as scheduled. The final rule is the result of an effort begun in the 1980s, involving businesses, labor organizations, health professionals and others, to improve the quality of the injury and illness records maintained under the Occupational Safety and Health Act. The new rule simplifies the recordkeeping process by making the record requirements more logical and coherent, by explaining the requirements in plain language, by consolidating the interpretations and guidance previously found in a host of secondary sources, and by providing new recordkeeping forms that are easier to understand and complete. However, the Agency's review has identified grounds for reconsidering two elements of the final rule, and for delaying the effective date of the requirements related to these elements, as explained below.

I. Why OSHA Is Proposing To Delay the Effective Date of the Final Rule Requirements on Hearing Loss and the MSD Definition and Column

A. Recording occupational hearing loss cases: Section 1904.10 of the final rule requires employers to record, by

checking the ''hearing loss'' column on the OSHA 300 Log (Log), a case in which an employee's hearing test (audiogram) reveals that a Standard Threshold Shift (STS) in hearing acuity has occurred. An STS is defined as ''a change in hearing threshold, relative to the most recent audiogram for that employee, of an average of 10 decibels (dB) or more at 2000, 3000 and 4000 hertz in one or both ears.'' Section 1904.10(b)(1). The final rule itself does not require testing of employees' hearing. However, OSHA's occupational noise standard (29 C.F.R. 1910.95) requires employers in general industry to conduct periodic audiometric testing of employees when employees' noise exposures are equal to, or more than, an 8-hour time-weighted average 85dB. If such testing reveals that an employee has sustained hearing loss equal to an STS, the employer must take protective measures, including requiring the use of hearing protectors, to prevent further hearing loss.

The current recordkeeping rule, which remains in effect until January 1, 2002, contained no specific threshold for recording hearing loss cases. In 1991, OSHA issued an enforcement policy on the criteria for recording occupational hearing loss, to remain in effect until new criteria were established by rulemaking. The 1991 policy stated that OSHA would cite employers for failing to record work related shifts in hearing of an average of 25dB or more at 2000, 3000, and 4000 Hertz in either ear.

One of the major issues in the recordkeeping rulemaking was to quantify the level of hearing loss that should be recorded as a ''significant'' health condition. This was critical because OSHA determined that minor or insignificant health conditions should no longer be recordable. See, e.g., 66 FR 5931. OSHA proposed a requirement to record hearing loss averaging 15dB at 2000, 3000 and 4000 Hertz in one or both ears. The agency asked for comment on several alternative criteria, including, 10, 20 and 25dB. The final rule used the STS criterion of 10dB instead of the proposed 15dB level.

In selecting an STS as the appropriate criterion for recording hearing loss, OSHA relied heavily on evidence submitted by the Coalition to Preserve OSHA and NIOSH and Protect Workers' Hearing that a 10dB loss in hearing acuity represents a serious health problem. ''OSHA [was] particularly persuaded by the Coalition's argument that 'An age-corrected STS is a large hearing change that can affect communicative competence' because an age-corrected STS represents a significant amount of cumulative hearing change from baseline hearing levels.'' 66 FR 6008. Based on this and other evidence, OSHA found that an STS ''represents a non-minor injury or illness of the type Congress identified as appropriate for recordkeeping purposes.'' 66 FR 6009.

Following publication of the final rule in January 2001, OSHA received submissions from interested parties criticizing the finding that an STS represents a significant health condition. Exhibits 1–2, 1–3, 1–4, 1–5, 1–6, 1–7. These parties argue that an STS is not necessarily considered a serious health problem by the medical community, by State workers compensation systems, or by the occupational noise standard (29 CFR 1910.95). The American Iron and Steel Institute noted that, ''According to the AMA, a person has suffered material impairment when testing reveals a 25dB average hearing loss from audiometric zero at 500, 1000, 2000, and 3000 hertz.'' AISI and other commenters assert that an STS is merely a precursor event indicating the need for follow-up actions, not a material health impairment standing alone.

OSHA has reviewed the record and agrees that reconsideration of the criteria for recording hearing loss is warranted. There is evidence in the record suggesting that an STS can constitute a serious health problem for individuals with pre-existing hearing loss. See 66 FR 6008 (''For an individual with pre-existing high frequency hearing loss on the baseline, STS usually involves substantial progression into the critical speech frequencies.'') There is also evidence that an STS is not necessarily a serious condition, and some commenters have questioned whether it is even a reliable criterion under real-world testing conditions. See, e.g., Exhibit 1–2. Finally, NIOSH notes in its Criteria for a Recommended Standard—Noise Exposure, ''the incipient permanent threshold shift may manifest itself with the same order of magnitude as typical audiometric measurement variability; about a 10-dB change in hearing thresholds.'' In view of this uncertainty, OSHA believes that the record should be reopened to permit consideration of additional medical and other relevant evidence, and to explore alternative approaches. For example, Organization Resources Counselors, Inc. (ORC) in its post-promulgation submissions urged the Agency to consider a sliding scale which would take account of an individual's existing level of impairment in determining whether further occupational hearing loss warrants recording. (Exhibits 1–6, 1–7). ORC's suggested approach, which was not addressed in the rulemaking, also deserves careful consideration.

In light of the decision to reconsider the 10dB criterion, OSHA is proposing to delay the effective date of Section 1904.10 until January 1, 2003, and to remove the ''Hearing loss'' column from the version of the Log to be used during calendar year 2002. OSHA believes that this proposed action is appropriate for several reasons. If OSHA decides to change the hearing loss criterion beginning in 2003, records of hearing loss cases based on the 10dB level for 2002 will be of little value since they could not be compared to records maintained either under the former rule's 25dB level or any new level effective in 2003. On the other hand, continuing the 25dB recording requirement for 2002 will yield data comparable to that for earlier years even if OSHA implements a new requirement for 2003. Furthermore, the proposed delay of the effective date would avoid the confusion and additional paperwork burden that would result if employers were required to implement the 10dB requirement for 2002, only to change over to a new requirement in 2003. These factors appear to outweigh any potential benefit to be gained by permitting Section 1904.10 to become effective while OSHA is reconsidering the 10dB criterion. If implementation of Section 1904.10 is delayed as proposed in this document, OSHA will provide new forms to be used for calendar year 2002 that do not contain a ''Hearing loss'' column.

B. Defining an MSD and checking the MSD column: Section 1904.12 of the final rule states that if an employee experiences a recordable musculoskeletal disorder (MSD), the employer must record it on the OSHA Log and must check the MSD column. For recordkeeping purposes, the rule defines MSDs as disorders of the muscles, nerves, tendons, ligaments, joints, cartilage and spinal discs that are not caused by slips, trips, falls, motor vehicle accidents or other similar accidents (see Section 1904.12(b)(1)). The Section also explains that in determining whether an MSD is recordable, the employer must use the same criteria that apply to other injuries or illnesses. To be recordable, the disorder must be work-related, must be a new case, and must meet one or more of the general recording criteria. Section 1904.12(b)(2) states that ''[t]here are no special criteria for determining which musculoskeletal disorders to record,'' and refers the reader to other sections of the rule in which the basic recording criteria are found.

OSHA's purpose in including an MSD column on the Log was to gather data on ''musculoskeletal disorders'' as that term is defined in Section 1904.12. Following Congressional disapproval of OSHA's ergonomics standard (PL 107.5, Mar. 20, 2001), the Secretary announced that she intends to develop a comprehensive plan to address ergonomic hazards and scheduled a series of forums to consider basic issues related to ergonomics (66 FR 31694, 66 FR 33578). One of the key issues to be considered in connection with the Secretary's comprehensive plan is the approach to defining an ergonomic injury.

Based on these developments, the Secretary believes that it is premature to define an MSD for recordkeeping purposes. Any definition of ''musculoskeletal disorder'' or other term for soft tissue injuries in the recordkeeping rule should be informed by the views of business, labor and the public health community on the problem of ergonomic hazards in the workplace, which the Secretary's forums are intended to elicit. Furthermore, to require employers to implement a new definition of MSD while the Agency is considering the issue in connection with the comprehensive ergonomics plan could create unnecessary confusion and uncertainty. Therefore, OSHA is proposing to delay the effective date of § 1904.12. Accordingly, the Log to be used for calendar year 2002 would not contain a definition for MSD or an MSD column. When the Department has progressed further in developing its comprehensive approach to ergonomic hazards, it will be in a better position to consider how employers will be required to report work-related ergonomics injuries.

This proposed action does not affect the employer's obligation to record all injuries and illnesses that meet the criteria set out in Sections 1904.4–1904.7, regardless of whether a particular injury or illness meets the definition of MSD found in Section 1904.12. Employers will be required to record soft-tissue disorders, including those involving subjective symptoms such as pain, as injuries or illnesses if they meet the general recording criteria that apply to all injuries and illnesses. The proposed delay of the effective date of Section 1904.12 does not affect this basic requirement. It simply means that employers will not have to determine which injuries should be classified under the category of ''MSDs'' or ''ergonomic injuries'' during the calendar year 2002.

II. Effect of the Proposed Delay of the Effective Date on Employer's Recordkeeping Obligations in Calendar Year 2002

A one-year delay of the effective date of the specified recordkeeping provisions would have the following effect on an employer's recordkeeping obligations during the 2002 calendar year:

Hearing loss cases: Employers would continue to record work-related shifts of an average of 25 dB or more at 2000, 3000, and 4000 hertz (Hz) in either ear on the OSHA 300 Log. When a recordable hearing loss occurs, the audiogram indicating the hearing loss would become the new baseline for determining whether future additional hearing loss by the individual must be recorded. Employers would check either the ''injury'' or the ''all other illness''column, as appropriate.

Soft-tissue disorder: Employers would record disorders affecting the muscles, nerves, tendons, ligaments and other soft tissue areas of the body in accordance with the general criteria in Sections 1904.4–1904.7 applicable to any injury or illness. Employers would also treat the symptoms of soft-tissue disorders the same as symptoms of any other injury or illness. Soft-tissue cases would be recordable only if they are work-related (Sec. 1904.5), are a new case (Sec. 1904.6), and meet one or more of the general recording criteria (Sec. 1904.7). Employers would check either the ''injury'' or the ''all other illness'' column, as appropriate.

III. Issues for Public Comment

OSHA particularly invites comment on the following issues. Issue 1. What is the appropriate criterion for recording cases of occupational hearing loss? OSHA is particularly interested in comments on the advantages and disadvantages of various hearing loss levels, including 10, 15, 20 and 25 dB, on alternative approaches such as the use of a sliding scale in which smaller incremental shifts would be recordable for employees with significant pre-existing hearing loss, and on the frequency of ''false positive'' results or other errors in audiometric measurements associated with each of these levels and approaches. Issue 2. What is the variability of audiometric testing equipment and how should this variability be taken into account, if at all, in the recordkeeping rule? Issue 3. What is the appropriate benchmark against which to measure hearing loss, e.g., the employee's baseline audiogram, audiometric zero, or some other measure? Issue 4. Should the recordkeeping rule treat subsequent hearing losses in the same employee as a new case for recording purposes?

Paperwork Reduction Act

On January 22, 2001, the Office of Management and Budget (OMB) received OSHA's request under the Paperwork Reduction Act of 1995 for approval of the information collection requirements in the final recordkeeping rule. This request for approval was withdrawn by the Agency on March 26, 2001, before OMB acted on it. OSHA will resubmit a request for OMB approval of the information collection requirements in the final rule, including appropriate changes in such requirements resulting from this proposal.

Regulatory Flexibility Certification

Pursuant to the Regulatory Flexibility Act (5 U.S.C. 601), the Acting Assistant Secretary certifies that the proposed rule will not have a significant adverse impact on a substantial number of small entities.

Executive Order

This document has been deemed significant under Executive Order 12866 and has been reviewed by OMB.

Authority

This document was prepared under the direction of R. Davis Layne, Acting Assistant Secretary for Occupational Safety and Health. It is issued under Section 8 of the Occupational Safety and Health Act (29 U.S.C. 657), and 5 U.S.C. 553.

Issued at Washington, DC this 28th day of June, 2001.

R. Davis Layne,

Acting Assistant Secretary of Labor.

[FR Doc. 01–16669 Filed 6–29–01; 9:53 am]

BILLING CODE 4510–26–M

ENVIRONMENTAL PROTECTION AGENCY

40 CFR Parts 61 and 63

[FRL–7006–7]

Proposed Approval of the Clean Air Act, Section 112(l), Delegation of Authority to Washington Department of Ecology and Four Local Air Agencies in Washington

AGENCY: Environmental Protection Agency (EPA).

ACTION: Proposed rule.

SUMMARY: Pursuant to the authority of Clean Air Act (CAA), section 112(l), EPA proposes to approve the State of

Washington Department of Ecology's (Ecology) request, and the requests of four local air pollution control agencies in Washington, for program approval and delegation of authority to implement and enforce specific federal National Emission Standards for Hazardous Air Pollutants (NESHAP) regulations (as they apply to both part 70 and non-part 70 sources) which have been adopted into state law. EPA proposes to delegate these programs to Ecology for the purpose of direct implementation and enforcement (within Ecology's jurisdiction). EPA also proposes to delegate these programs to the following four local agencies: the Benton Clean Air Authority (BCAA), the Olympic Air Pollution Control Authority (OAPCA), the Spokane County Air Pollution Control Authority (SCAPCA), and the Yakima Regional Clean Air Authority (YRCAA).

EPA also proposes to approve a mechanism by which Ecology and the four local agencies will receive delegation of future NESHAPs; and proposes to waive its notification requirements such that sources within Ecology and SCAPCA's jurisdictions would only need to send notifications and reports to Ecology or SCAPCA, and would *not* need to send a copy to EPA, Region X.

Delegation to the remaining local agencies in the State of Washington (the Northwest Air Pollution Authority, the Puget Sound Clean Air Agency, and the Southwest Air Pollution Control Authority) was promulgated in a direct final rule on December 1, 1998. A correction and clarification to that direct final rule was published on February 17, 1999, and amendments updating this delegation were published on April 22, 1999, and February 28, 2000.

DATES: Written comments must be received on or before August 2, 2001.

ADDRESSES: Written comments should be submitted concurrently to the addressees listed below:

Tracy Oliver, U.S. Environmental Protection Agency, Region X, Office of Air Quality (OAQ–107), 1200 Sixth Avenue, Seattle, WA, 98101.

Mary Burg, Washington State Dept of Ecology, P.O. Box 47600, Olympia, WA 98504–7600.

Copies of the delegation requests and other supporting documentation are available for public inspection at US EPA, Region X office during normal business hours. Please contact Doug Hardesty to make an appointment.

FOR FURTHER INFORMATION CONTACT: Tracy Oliver, US EPA, Region X (OAQ–107), 1200 Sixth Avenue, Seattle, WA, 98101, (206) 553–1172.

SUPPLEMENTARY INFORMATION: This Supplementary Information section is organized as follows:

I. EPA Action

What Action is EPA Proposing Today?
Why is EPA Proposing this Action?
What Changes Would this Delegation Create?
What Specific Standards Does EPA Propose to Delegate?
What Specific Standards Does EPA Propose *Not* to Delegate?
What General Provisions Authorities Does EPA Propose to Delegate?
What General Provisions Authorities are Automatically Granted as Part of These Agencies' Part 70 Operating Permits Program Approval?
What General Provisions Authorities Are Not Delegated?
How Would This Delegation Affect the Regulated Community?
Where Would the Regulated Community Send Notifications and Reports?
How Would This Delegation Affect Indian Country?
What Would be Ecology and the Four Local Agencies' Reporting Requirements to EPA?
How Would These Agencies Receive Delegation for Future Standards?
How Frequently Should These Agencies Update their Delegation?
Does the Public Have an Opportunity to Comment?

II. Background and Purpose

What Authority Does EPA Have to Grant Delegations?
What is the History of this Delegation?
Why Did EPA Grant Only Interim Approval of the Original Request?
How Have These Agencies Satisfied Enforcement Authority Deficiencies?
What Changes Have Been Made to the Original Delegation Request?

III. Summary of Action

IV. Administrative Requirements

I. EPA Action

What Action Is EPA Proposing Today?

In this action, under the authority of CAA section 112(l)(5) and 40 CFR 63.91, EPA proposes approval of Ecology's request, and the requests of BCAA, OAPCA, SCAPCA and YRCAA, for program approval and delegation of authority to implement and enforce specific 40 CFR parts 61 and 63 subparts, as listed in the tables at the end of this rule. Along with these specific standards, EPA proposes to delegate certain General Provisions authorities, as explained below. EPA proposes to delegate this authority to Ecology for the purpose of direct implementation (within Ecology's jurisdiction). EPA also proposes to delegate this authority to BCAA, OAPCA, SCAPCA and YRCAA.

In this action, EPA proposes to waive its notification requirements such that sources within Ecology and SCAPCA's jurisdictions would only need to send notifications and reports to Ecology or SCAPCA, and would *not* need to send a copy to EPA, Region X. (Sources within BCAA, OAPCA or YRCAA's jurisdictions would need to continue sending notifications to both the respective agency and EPA, Region X).

Under the authority of CAA section 112(l)(5) and 40 CFR 63.91, EPA is also proposing approval of Ecology and the four locals agencies' mechanism for streamlining future delegation of those federal NESHAP regulations that are adopted unchanged into state and local laws. This mechanism is explained in a separate paragraph below.

Delegation to the remaining local agencies in the State of Washington (the Northwest Air Pollution Authority (NWAPA), the Puget Sound Clean Air Agency (Puget Sound Clean Air), and the Southwest Air Pollution Control Authority (SWAPCA)) was promulgated in a direct final rule on December 1, 1998 (*see* 63 FR 66054) and became effective on February 1, 1999. A correction and clarification to that direct final rule was published on February 17, 1999 (*see* 64 FR 7793). Additionally, amendments updating this delegation were published on April 22, 1999 (*see* 64 FR 19719) and February 28, 2000 (*see* 65 FR 10391). Therefore, this action will not apply to NWAPA, Puget Sound Clean Air, or SWAPCA.

Why Is EPA Proposing This Action?

EPA is proposing this action because it has determined that these agencies have met the following criteria for approval:

(1) The state or local program is ''no less stringent'' than the corresponding federal program or rule;

(2) The State or local has adequate authority and resources to implement the program;

(3) The schedule for implementation and compliance is sufficiently expeditious; and

(4) The program is otherwise in compliance with federal guidance.

What Changes Would This Delegation Create?

If EPA approves this proposal, Ecology and the four local agencies will have primary implementation and enforcement responsibility for the adopted NESHAP regulations. This means that if approved, sources subject to the delegated standards would send notifications and reports to these agencies (and send a copy to EPA, Region 10, except for those sources within Ecology and SCAPCA's jurisdictions). Questions and

compliance issues would also be directed to these agencies. As with any delegation, however, EPA retains the right, pursuant to CAA section 112(l)(7), to enforce any applicable emission standard or requirement under CAA section 112. Additionally, if approved, EPA would retain certain General Provisions authorities, as explained below.

What Specific Standards Does EPA Propose to Delegate?

EPA proposes to delegate certain 40 CFR parts 61 and 63 NESHAPs in effect on July 1, 2000, as adopted by reference into WAC 173–400–075 on November 22, 2000. In most cases, this delegation would apply to all sources (exceptions are explained below). The standards to be delegated are specified in the tables at the end of this rule.

EPA agrees with the position of the Office of the Attorney General of Washington's office that the November 22, 2000 revision to WAC 173–400–075(5)(a) adopts as state rules those parts of Part 63 that EPA proposes to delegate. A revision to the state rule, which will clarify the provision, is currently being processed by the State.

EPA proposes to delegate 40 CFR part 61, subpart M (Asbestos NESHAP) to Ecology, BCAA, and OAPCA as it applies to major sources only, based on their requests. Also, EPA proposes to delegate 40 CFR part 63, subpart M (Perchloroethylene Dry Cleaning NESHAP) to Ecology and YRCAA as it applies to major sources only.

Also, Ecology has a working relationship with BCAA to manage the Asbestos NESHAP for sources located on the Hanford Nuclear Reservation. Ecology retains enforcement authority for the Asbestos NESHAP consistent with RCW 70.105.240. EPA acknowledges this managerial relationship between Ecology and BCAA concerning the Asbestos NESHAP since both agencies are delegated the authority to implement this program. However, EPA asserts that Ecology retains enforcement authority for sources located on the Hanford Nuclear Reservation because Ecology is the enforcing agency.

What Specific Standards Does EPA Propose Not to Delegate?

EPA proposes *not* to delegate to Ecology and the four local agencies any 40 CFR part 61, subparts pertaining to radon or radionuclides. Typically, EPA delegates all standards adopted (and requested) by an air agency and in effect as of a certain date, regardless of whether or not there are any applicable sources within that agency's jurisdiction. As an exception, EPA proposes *not* to delegate the 40 CFR part 61, subparts pertaining to radon or radionuclides which includes: subparts B, H, I, K, Q, R, T, and W. EPA has determined that there are either no sources in these agencies' jurisdictions (and that no new sources are likely to emerge), or if there are sources, the agency does not have sufficient expertise to implement these NESHAPs.

The State Department of Health is currently implementing 40 CFR part 61, subparts H and I as the state radionuclide standards for the State of Washington. The State Department of Health had received interim delegation for these two radionuclide standards (as they pertain to part 70 sources only) on August 2, 1995 (*see* 60 FR 39263). However, this interim delegation lapsed on November 9, 1996, because the State had not received full approval of the Washington Title V operating permits program. (*see* 60 FR 39264). Therefore, EPA is currently responsible for federal implementation of 40 CFR part 61, subparts H and I. (Note: EPA recently received a request from the Department of Health for delegation of federal radionuclide standards at 40 CFR part 61, subparts H and I. EPA is evaluating this request.)

Additionally, EPA is *not* proposing delegation of the regulations implementing CAA sections 112(g) and 112(j), codified at 40 CFR part 63, subpart B, to Ecology and the four local agencies. EPA recognizes that subpart B need not be delegated under the section 112(l) approval process. When promulgating the regulations implementing CAA section 112(g), EPA stated its view that ''the Act directly confers on the permitting authority the obligation to implement section 112(g) and to adopt a program which conforms to the requirements of this rule. Therefore, the permitting authority need not apply for approval under section 112(l) in order to use its own program to implement section 112(g)'' (*see* 61 FR 68397). Similarly, when promulgating the regulations implementing section 112(j), EPA stated its belief that ''section 112(l) approvals do not have a great deal of overlap with the section 112(j) provision, because section 112(j) is designed to use the Title V permit process as the primary vehicle for establishing requirements'' (*see* 59 FR 26447). Therefore, state or local agencies implementing the requirements under sections 112(g) and 112(j) do not need approval under section 112(l).

What General Provisions Authorities Does EPA Propose to Delegate?

In a memorandum from John Seitz, Office of Air Quality Planning and Standards, dated July 10, 1998, entitled, ''Delegation of 40 CFR Part 63 General Provisions Authorities to State and Local Air Pollution Control Agencies,'' EPA clarified which of the authorities in the General Provisions may and may not be delegated to state and local agencies under 40 CFR part 63, subpart E. Based on this memo, EPA proposes to delegate the part 63, subpart A, sections that are listed below. Delegation of these General Provisions Authorities would enable Ecology and the four local agencies to carry out the Administrator's responsibilities in these sections of subpart A. In delegating these authorities, EPA would be granting Ecology and the four local agencies the authority to make decisions which are not likely to be nationally significant or to alter the stringency of the underlying standard. The intent is that these agencies would make decisions on a source-by-source basis, *not* on a source category-wide basis.

PART 63, SUBPART A, GENERAL PROVISIONS AUTHORITIES WHICH EPA PROPOSES TO DELEGATE TO ECOLOGY AND THE FOUR LOCALS

Section	Authorities
63.1	Applicability Determinations
63.6(e)	Operations and Maintenance Requirements—Responsibility for Determining Compliance
63.6(f)	Compliance with Non-Opacity Standards—Responsibility for Determining Compliance
63.6(h) [except 63.6(h)(9)].	Compliance with Opacity and Visible Emissions Standards—Responsibility for Determining Compliance
63.7(c)(2)(i) and (d).	Approval of Site-Specific Test Plans
63.7(e)(2)(i)	Approval of Minor Alternatives to Test Methods
63.7(e)(2)(ii) and (j).	Approval of Intermediate Alternatives to Test Methods
63.7(e)(2)(iii)	Approval of Shorter Sampling Times and Volumes When Necessitated by Process Variables or Other Factors
63.7(e)(2)(iv) and (h)(2), (3).	Waiver of Performance Testing
63.8(c)(1) and (e)(1).	Approval of Site-Specific Performance Evaluation (monitoring) Test Plans
63.8(f)	Approval of Minor Alternatives to Monitoring

PART 63, SUBPART A, GENERAL PROVISIONS AUTHORITIES WHICH EPA PROPOSES TO DELEGATE TO ECOLOGY AND THE FOUR LOCALS—Continued

Section	Authorities
63.8(f)	Approval of Intermediate Alternatives to Monitoring
63.9 and 63.10 [except 63.10(f)].	Approval of Adjustments to Time Periods for Submitting Reports

In delegating 40 CFR 63.9 and 63.10, ''Approval of Adjustments to Time Periods for Submitting Reports,'' these agencies would have the authority to approve adjustments to the timing that reports are due, but would not have the authority to alter the contents of the reports. For Title V sources, semiannual and annual reports are required by part 70 and nothing herein would change that requirement.

What General Provisions Authorities Are Automatically Granted as Part of These Agencies' Part 70 Operating Permits Program Approval?

Certain General Provisions authorities are automatically granted to Ecology and the four local agencies as part of their part 70 operating permits program approval (regardless of whether the operating permits program approval is interim or final). These are 40 CFR 63.6(i)(1), ''Extension of Compliance with Emission Standards,'' and 63.5(e) and (f), ''Approval and Disapproval of Construction and Reconstruction.'' [1] Additionally, for 40 CFR 63.6(i)(1), Ecology and the four local agencies do not need to have been delegated a particular standard or have issued a part 70 operating permit for a particular source to grant that source a compliance extension. However, Ecology or the local agency must have authority to implement and enforce the particular standard against the source in order to grant that source a compliance extension.

What General Provisions Authorities Are Not Delegated?

In general, EPA does not delegate any authorities that require implementation through rulemaking in the **Federal Register**, or where Federal overview is the only way to ensure national consistency in the application of the standards or requirements of CAA section 112. Listed in the footnotes of the parts 61 and 63 delegation tables at the end of this rule are the specific authorities which cannot be delegated to any state or local agency; which EPA therefore would retain.[2]

How Would This Delegation Affect the Regulated Community?

After a state or local agency has been delegated the authority to implement and enforce a NESHAP, the delegated agency (in this case, Ecology and the four locals) becomes the primary point of contact with respect to that NESHAP. Therefore, if EPA approves this proposal, regulated facilities would direct questions and compliance issues to these agencies. Additionally, all pending questions and compliance issues, even those which may currently be under consideration by EPA, will be resolved by Ecology or the appropriate local agency.

Where Would the Regulated Community Send Notifications and Reports?

If this proposal is approved, facilities within BCAA, OAPCA or YRCAA's jurisdictions would need to submit notifications directly to the respective agency, and also send a copy to EPA, Region X.

Pursuant to 40 CFR 63.9(a)(4)(ii) and 63.10(a)(4)(ii), EPA, Region X, proposes to waive the requirement for sources to submit notifications to both Ecology or SCAPCA and EPA, Region X. If approved, facilities within Ecology and SCAPCA's jurisdictions would need to submit notifications and reports directly to Ecology or SCAPCA, and would *not* need to send a copy to EPA, Region X.

How Would This Delegation Affect Indian Country?

The delegation proposed for Ecology and the four local agencies to implement and enforce NESHAPs would not extend to sources or activities located in Indian country, as defined in 18 U.S.C. 1151. ''Indian country'' is defined under 18 U.S.C. 1151 as: (1) All land within the limits of any Indian reservation under the jurisdiction of the United States Government, notwithstanding the issuance of any patent, and including rights-of-way running through the reservation, (2) all dependent Indian communities within the borders of the United States, whether within the original or subsequently acquired territory thereof, and whether within or without the limits of a State, and (3) all Indian allotments, the Indian titles to which have not been extinguished, including rights-of-way running through the same. Under this definition, EPA treats as reservations trust lands validly set aside for the use of a Tribe even if the trust lands have not been formally designated as a reservation. Consistent with previous federal program approvals or delegations, EPA will continue to implement the NESHAPs in Indian country because these agencies did not adequately demonstrate their authority over sources and activities located within the exterior boundaries of Indian reservations and other areas in Indian country.

What Would Be Ecology and the Four Local Agencies' Reporting Requirements to EPA?

In delegating the authority to implement and enforce these rules, EPA would require that these delegated agencies submit to EPA the following information:

(1) These agencies must input all source information into the Aerometric Information Retrieval System (AIRS) for both point and area sources. The agencies must enter the information into the AIRS system by September 30 of each year;

(2) These agencies must also report to EPA, Region X, all MACTRAX information upon request, which is typically semiannually. (MACTRAX provides summary data for each implemented NESHAP that EPA uses to evaluate the Air Toxics Program);

(3) These agencies must also provide any additional compliance related information to EPA, Region X, as agreed upon in the Compliance Assurance Agreement;

(4) In receiving delegation for specific General Provisions authorities, these agencies must submit to EPA, Region X, copies of determinations issued pursuant to these authorities (which are listed in the table above);

(5) These agencies must also forward to EPA, Region X, copies of any notifications received pursuant to § 63.6(h)(7)(ii) pertaining to the use of a continuous opacity monitoring system; and

(6) These agencies must submit to EPA's Emission Measurement Center of the Emissions Monitoring and Analysis Division copies of any approved intermediate changes to test methods or monitoring. (For definitions of major, intermediate and minor alternative test methods or monitoring methods, see the

[1] Sections 112(i)(1) and (3) state that ''Extension of Compliance with Emission Standards'' and ''Approval and Disapproval of Construction and Reconstruction'' can be implemented by the ''Administrator (or a State with a permit program approved under Title V).'' EPA interprets that this authority does not require delegation through subpart E and, instead, is automatically granted to States as part of their part 70 operating permits program approval.

[2] For authorities which are not addressed in this rulemaking and not identified in any part 61 or 63 subparts as authorities that cannot be delegated, the agencies may assume that the authorities in question would be delegated.

July 10, 1998, memorandum from John Seitz, referenced above). These intermediate test methods or monitoring changes should be sent via mail or facsimile to: Chief, Source Categorization Group A, U.S. EPA (MD–19), Research Triangle Park, NC 27711, Facsimile telephone number: (919) 541–1039.

How Would These Agencies Receive Delegation for Future and Revised Standards?

If this proposed delegation is approved, Ecology or a local agency would receive delegation of future standards by the following process:

(1) Ecology or the local agency will send a letter to EPA requesting delegation for future NESHAP standards adopted by reference into state regulations;

(2) EPA will send a letter of response back to Ecology or the local agency granting this delegation request (or explaining why EPA cannot grant the request);

(3) Ecology or the local agency does not need to send a response back to EPA;

(4) If EPA does not receive a negative response from Ecology or the local agency within 10 days of EPA's letter to Ecology or the local agency, then the delegation will be final 10 days after the date of the letter from EPA; and

(5) Periodically, EPA will publish a notice in the **Federal Register** informing the public of the updated delegation.

How Frequently Should These Agencies Update Their Delegation?

Ecology and the four local agencies should update their incorporations by reference of 40 CFR parts 61 and 63 standards and request updated delegation annually, as current standards are revised and new standards are promulgated.

Does the Public Have an Opportunity to Comment?

EPA is seeking comment on its proposal to grant Ecology and the four local agencies the authority to implement and enforce certain 40 CFR parts 61 and 63 NESHAPs. EPA will consider all public comments submitted during the public comment period. Issues raised by the comments will be carefully reviewed and considered in the decision to approve or disapprove Ecology's request. EPA will provide notice of its final decision in the **Federal Register**, including a summary of the reasons for the final decision and a summary of all major comments.

Please note that the public was provided the opportunity to comment on the proposed interim approval of Ecology and the four locals' delegation request for certain 40 CFR part 61 standards, as they apply to part 70 sources, on February 16, 1996 (*see* 61 FR 6184). EPA received public comments on that proposal and responded to them in the August 26, 1996, **Federal Register** (*see* 61 FR 43675). The public has not been given an opportunity to comment on requests submitted since the February 16, 1996, **Federal Register**, on delegation of 40 CFR part 61 standards as they apply to non-part 70 sources, and on delegation of 40 CFR part 63 standards as they apply to both part 70 and non-part 70 sources. That is why EPA is requesting comments at this time.

II. Background and Purpose

What Authority Does EPA Have to Grant Delegations?

Section 112(l) of the federal Clean Air Act (CAA) enables the EPA to approve state and local air toxics programs or rules to operate in place of the federal air toxics program or rules. The federal air toxics program implements the requirements found in section 112 of the CAA pertaining to the regulation of hazardous air pollutants. Approval of an air toxics program is granted by EPA if the Agency finds that:

(1) the state (or local) program is ''no less stringent'' than the corresponding federal program or rule,

(2) the State (or local) has adequate authority and resources to implement the program,

(3) the schedule for implementation and compliance is sufficiently expeditious, and

(4) the program is otherwise in compliance with federal guidance.

Once approval is granted, the air toxics program can be implemented and enforced by state or local agencies, as well as EPA.

What Is the History of This Delegation?

On February 16, 1996 (*see* 61 FR 6184), EPA proposed to approve the request of Ecology and the Washington local agencies, including BCAA, OAPCA, SCAPCA and YRCAA, for delegation of authority to implement and enforce certain 40 CFR part 61 NESHAP rules, as they apply to part 70 sources. On August 26, 1996 (*see* 61 FR 43675), under the authority of CAA section 112(l)(5) and 40 CFR 63.91, EPA promulgated final interim approval of this request. EPA also promulgated interim approval of a mechanism for Ecology and the four locals to receive future delegation of CAA section 112 standards that are adopted unchanged from federal standards as promulgated.

Why Did EPA Grant Only Interim Approval of the Original Request?

In the August 26, 1996, rulemaking, EPA granted only interim approval of the request for delegation because EPA determined that the criminal authorities under Ecology's statute, RCW 70.94.430, did not meet the stringency requirements of 40 CFR 70.11. In this respect, EPA retained implementation and enforcement authority for these rules as they applied to non-part 70 sources during the interim period or until such time as Ecology and the local agencies could demonstrate that their criminal authorities met EPA stringency requirements. Full approval has been contingent upon a demonstration that Ecology and the local agencies' criminal enforcement authorities are consistent with the requirements of 40 CFR 70.11(a), and therefore 40 CFR 63.91(b)(1) and (b)(6). Specifically, in the proposed interim approval notice (*see* 61 FR 6184), EPA requested the following of Ecology and the local agencies:

(1) Revise RCW 70.94.430 to provide for maximum criminal penalties of not less than $10,000 per day per violation, as required by 40 CFR 70.11(a)(3)(ii).

(2) Revise RCW 70.94.430 to allow the imposition of criminal penalties against any person who knowingly makes any false material statement, representation or certification in any form, in any notice or report required by a permit, as required by 40 CFR 70.11(a)(3)(iii). This provision must include maximum penalties of not less than $10,000 per day per violation, and

(3) Revise RCW 70.94.430 to allow the imposition of criminal penalties against any person who knowingly renders inaccurate any required monitoring device or method, as required by 40 CFR 70.11(a)(3)(iii). This provision must include maximum penalties of not less than $10,000 per day per violation, or

(4) Demonstrate to the satisfaction of EPA that these authorities are consistent with 40 CFR 70.11, and therefore 40 CFR 63.91.

How Have These Agencies Satisfied Enforcement Authority Deficiencies?

In response to EPA's request, Ecology submitted a letter dated October 7, 1996, that addressed these issues. This documentation included a legal memorandum from the Attorney General of Washington's office dated May 23, 1996, explaining how the statutory authority in RCW 70.94.430(1) may be interpreted to provide the required authority, which satisfied condition 1. In addition, Ecology amended the state regulation at

Washington Administrative Code (WAC) 173–400–105(7) and (8) to include prohibitions against knowingly making false statements and knowingly rendering inaccurate any monitoring device, thus satisfying requirements 2 and 3. Furthermore, in a letter dated February 28, 1997, Ecology provided supporting documentation from BCAA, SCAPCA, and OAPCA describing how they each have addressed these issues. In a letter dated May 5, 1997, Ecology provided supporting documentation from YRCAA describing how it has addressed these issues. Ecology also updated SCAPCA and OAPCA's supporting documentation in letters dated June 4, 1997, and October 27, 1997, respectively. All four local agencies committed to enforcing WAC 173–400–105(7) and (8) until such time as they might adopt their own equivalent regulations on this subject. Based on information provided by Ecology and the four locals, EPA has determined that these actions adequately address the issue of adequate criminal authorities needed to meet the requirements of 40 CFR 63.91 and 70.11, and to obtain final delegation for all sources within Ecology and the four locals' jurisdiction.

After resolving the above issues related to criminal authorities, this delegation was again delayed due to certain state regulations which EPA believed conflicted with the enforcement authorities required for delegation of federal programs. The Regulatory Reform Act of 1995 (''Act''), codified at Chapter 43.05 RCW precludes ''regulatory agencies,'' as defined in RCW 43.05.010, from assessing civil penalties except for a violation of a specific permit term or condition; a repeat violation; a violation that is not corrected within a reasonable period of time; or a violation that has a probability of placing a person in danger of death or bodily harm, a probability of causing more than minor environmental harm, or of causing physical damage to the property of another in excess of one thousand dollars. Counsel for Puget Sound Clean Air has provided EPA with a legal opinion stating that the Act does not apply to local air pollution control authorities in Washington because local air pollution control authorities are not ''regulatory agencies'' within the meaning of the Act. EPA has reviewed the statutory and regulatory language relied on by Puget Sound Clean Air's counsel in reaching this conclusion and agrees that the Act does not constrain the enforcement authority of local air pollution control authorities and therefore does not pose a bar to delegation of CAA programs to local air pollution control agencies in Washington. As for the Act's applicability to Ecology's enforcement authorities, in letters dated June 10, 1997, and November 20, 1997, EPA advised Ecology that the Act conflicted with the necessary enforcement authority required for authorization or approval of federal environmental programs to Ecology. Subsequently, on December 10, 1997, in accordance with RCW 43.05.902, Ecology formally notified the Governor of Washington that a conflict existed between the Act and the requirements for State authorization or approval of certain federal environmental programs. As a result of the determination of an existing conflict, RCW 43.05.040, .050, .060(3), and .070, which prohibit the State from issuing civil penalties except under certain circumstances, were deemed to be inoperative to several State environmental programs administered by the Department of Ecology, including the CAA program. In reliance on this determination, EPA believes that the conflict between the Act and the requirements for EPA approval of Ecology's CAA programs has been addressed by rendering inoperative those portions of the Act that conflicted with Ecology's required enforcement authorities.

What Changes Have Been Made to the Original Delegation Request?

Since the August 26, 1996, rulemaking, Ecology has submitted several updated delegation requests on behalf of itself and the four local agencies to reflect the adoption of revised or newly promulgated federal standards. Based on these updated requests, Ecology and the four locals' current request includes certain subparts in 40 CFR parts 61 and 63 in effect on July 1, 2000, as adopted by reference into WAC 173–400–075 on November 22, 2000, as they apply to all sources. Two exceptions to this are: (1) Ecology, BCAA, and OAPCA, have requested the Asbestos NESHAP for part 70 sources only; and (2) Ecology has requested the Perchloroethylene Dry Cleaning NESHAP for part 70 sources only, as is allowed by their rule.

Both Ecology and SCAPCA have requested that EPA waive the part General Provisions notification requirements, in accordance with 40 CFR 63.9 and 63.10, such that sources would not need to send notifications and reports to EPA, Region X. Ecology submitted these requests in its letter dated November 1, 1999, and SCAPCA submitted a request in a letter dated March 3, 1997. Ecology and SCAPCA prefer to be the sole recipient of notifications and reports to reduce the burden on sources and EPA. By this action, EPA, Region X is waiving the notification and reporting requirements in accordance with 40 CFR 63.9 and 63.10, such that sources only need to provide notification and reports to Ecology or SCAPCA, and would not need to send notifications and reports to EPA, Region X.

In addition, Ecology and SCAPCA clarified to EPA, Region X that they seek delegation of the reporting requirements of 40 CFR 61.10 such that sources covered by this provision need only send reports to Ecology or SCAPCA and not to EPA. By this action, EPA is delegating the reporting requirements of 40 CFR 61.10 to Ecology and SCAPCA, and sources only need to provide the reports under that section to Ecology or SCAPCA.

Ecology also requested approval of Ecology's state regulation at WAC 173–400–091 to recognize this regulation as federally enforceable for purposes of establishing potential-to-emit limitations. EPA is not taking action on this request because this regulation has already received federal approval in a final **Federal Register** rule dated June 2, 1995 (see 60 FR 28726).

III. Summary of Action

Pursuant to the authority of CAA section 112(l) of the Act and 40 CFR part 63, subpart E, EPA is proposing to approve Ecology's request, and the requests of BCAA, OAPCA, SCAPCA and YRCAA, for program approval and delegation of authority to implement and enforce specific 40 CFR parts 61 and 63 Federal NESHAP regulations (as they apply to both part 70 and non-part 70 sources) which have been adopted into state law. EPA is proposing to delegate this authority to Ecology for the purpose of direct implementation (within Ecology's jurisdiction). EPA is also proposing to delegate this authority to BCAA, OAPCA, SCAPCA and YRCAA. Additionally, EPA proposes to approve the mechanism by which Ecology and the four local agencies will receive delegation of future NESHAP regulations that are adopted unchanged into state law; and also proposes to waive the requirement for sources within Ecology and SCAPCA's jurisdictions to send copies of notifications and reports to EPA.

IV. Administrative Requirements

A. Executive Orders 12866 and 13045

The Office of Management and Budget (OMB) has exempted this regulatory action from review under Executive

Order 12866, entitled ''Regulatory Planning and Review.''

This rule is not subject to Executive Order 13045, entitled, ''Protection of Children from Environmental Health Risks and Safety Risks,'' because it is not an ''economically significant'' action under Executive Order 12866.

B. Executive Order 13132

Federalism (64 FR 43255, August 10, 1999) revokes and replaces Executive Orders 12612 (Federalism) and 12875 (Enhancing the Intergovernmental Partnership). Executive Order 13132 requires EPA to develop an accountable process to ensure ''meaningful and timely input by State and local officials in the development of regulatory policies that have federalism implications.'' ''Policies that have federalism implications'' is defined in the Executive Order to include regulations that have ''substantial direct effects on the States, on the relationship between the national government and the States, or on the distribution of power and responsibilities among the various levels of government.'' Under Executive Order 13132, EPA may not issue a regulation that has federalism implications, that imposes substantial direct compliance costs, and that is not required by statute, unless the Federal government provides the funds necessary to pay the direct compliance costs incurred by State and local governments, or EPA consults with State and local officials early in the process of developing the proposed regulation. The EPA also may not issue a regulation that has federalism implications and that preempts State law unless the Agency consults with State and local officials early in the process of developing the proposed regulation.

This rule does not have federalism implications. It will not have substantial direct effects on the States, on the relationship between the national government and the States, or on the distribution of power and responsibilities among the various levels of government, as specified in Executive Order 13132, because it merely approves a State program and rules implementing a Federal standard, and does not alter the relationship or the distribution of power and responsibilities established in the CAA. Thus, Executive Order 13132 does not apply to this rule.

Although section 6 of the Executive Order does not apply to this rule, EPA did consult with representatives of State and local governments in developing this rule, and this rule is in response to the State's and local's delegation request.

C. Executive Order 13084

Under Executive Order 13084, EPA may not issue a regulation that is not required by statute, that significantly or uniquely affects the communities of Indian tribal governments, and that imposes substantial direct compliance costs on those communities, unless the Federal government provides the funds necessary to pay the direct compliance costs incurred by the tribal governments. If the mandate is unfunded, EPA must provide to the Office of Management and Budget, in a separately identified section of the preamble to the rule, a description of the extent of EPA's prior consultation with representatives of affected tribal governments, a summary of the nature of their concerns, and a statement supporting the need to issue the regulation. In addition, Executive Order 13084 requires EPA to develop an effective process permitting elected and other representatives of Indian tribal governments ''to provide meaningful and timely input in the development of regulatory policies on matters that significantly or uniquely affect their communities.''

This rule does not significantly or uniquely affect the communities of Indian tribal governments. This action does not involve or impose any requirements that affect Indian Tribes. Accordingly, the requirements of section 3(b) of Executive Order 13084 do not apply to this rule.

D. Regulatory Flexibility Act

Under the Regulatory Flexibility Act (RFA), 5 U.S.C. 600 *et seq.*, EPA must prepare a regulatory flexibility analysis assessing the impact of any rule on small entities. 5 U.S.C. 603 and 604. Alternatively, EPA may certify that the rule will not have a significant economic impact on a substantial number of small entities. Small entities include small businesses, small not-for-profit enterprises, and small government entities with jurisdiction over populations of less than 50,000.

Delegation of authority to implement and enforce unchanged federal standards under section 112(l) of the CAA does not create any new requirements but simply transfers primary implementation authorities to the State (or local) agency. Therefore, because this action does not impose any new requirements, I certify that it does not have a significant impact on any small entities affected.

E. Unfunded Mandates

Under section 202 of the Unfunded Mandates Reform Act of 1995 (''Unfunded Mandates Act''), signed into law on March 22, 1995, EPA must prepare a budgetary impact statement to accompany any proposed or final rule that includes a Federal mandate that may result in estimated annual costs to State, local, or tribal governments in the aggregate, or to private sector, of $100 million or more. Under section 205, EPA must select the most cost-effective and least burdensome alternative that achieves the objectives of the rule and is consistent with statutory requirements. Section 203 requires EPA to establish a plan for informing and advising any small governments that may be significantly or uniquely impacted by the rule.

EPA has determined that the delegation action promulgated does not include a Federal mandate that may result in estimated annual costs of $100 million or more to either State, local, or tribal governments in the aggregate, or to the private sector. This Federal action approves pre-existing requirements under State or local law, and imposes no new Federal requirements. Accordingly, no additional costs to State, local, or tribal governments, or to the private sector, result from this action.

F. Submission to Congress and the Comptroller General

The Congressional Review Act, 5 U.S.C. 801 *et seq.*, as added by the Small Business Regulatory Enforcement Fairness Act of 1996, generally provides that before a rule may take effect, the agency promulgating the rule must submit a rule report, which includes a copy of the rule, to each House of the Congress and to the Comptroller General of the United States. EPA will submit a report containing this rule and other required information to the U.S. Senate, the U.S. House of Representatives, and the Comptroller General of the United States prior to publication of the rule in the **Federal Register**. This rule is not a ''major'' rule as defined by 5 U.S.C. 804(2).

G. Petitions for Judicial Review

Under section 307(b)(1) of the CAA, petitions for judicial review of this action must be filed in the United States Court of Appeals for the appropriate circuit by September 4, 2001. Filing a petition for reconsideration by the Administrator of this final rule does not affect the finality of this rule for the purposes of judicial review nor does it extend the time within which a petition

for judicial review may be filed, and shall not postpone the effectiveness of such rule or action. This action may not be challenged later in proceedings to enforce its requirements (*see* section 307(b)(2)).

List of Subjects

40 CFR Part 61

Environmental protection, Air pollution control, Arsenic, Asbestos, Benzene, Beryllium, Hazardous substances, Mercury, Reporting and recordkeeping requirements, Vinyl chloride.

40 CFR Part 63

Environmental protection, Administrative practice and procedure, Air pollution control, Hazardous substances, Intergovernmental relations, Reporting and recordkeeping requirements.

Dated: June 5, 2001.

Ron Kreizenbeck,

Acting Regional Administrator, Region X.

Title 40, chapter I, parts 61 and 63 of the Code of Federal Regulations is proposed to be amended as follows:

PART 61—[AMENDED]

1. The authority citation for part 61 continues to read as follows:

Authority: 42 U.S.C. 7401, 7412, 7413, 7414, 7416, 7601 and 7602.

Subpart A—General Provisions

2. Section 61.04 is amended by revising paragraphs (b)(WW)(i), (iv), (v), and (vi), by adding paragraph (b)(WW)(viii); and by revising the table in paragraph (c)(10) to read as follows:

§ 61.04 Address.

* * * * *

(b) * * *

(WW)(i)Washington: State of Washington, Department of Ecology (Ecology), P.O. Box 47600, Olympia, WA 98504–7600.

Note: For a table listing Ecology's delegation status, see paragraph (c)(10) of this section.

* * * * *

(iv) Spokane County Air Pollution Control Authority (SCAPCA), West 1101 College Avenue, Suite 403, Spokane, WA 99201.

Note: For a table listing SCAPCA's delegation status, see paragraph (c)(10) of this section.

(v) Yakima Regional Clean Air Authority (YRCAA), 6 South 2nd, Room 1016, Yakima, WA 98901.

Note: For a table listing YRCAA's delegation status, see paragraph (c)(10) of this section.

(vi) Olympic Air Pollution Control Authority (OAPCA), 909 Sleater-Kinney Road SE, Suite 1, Lacey, WA 98503.

Note: For a table listing OAPCA's delegation status, see paragraph (c)(10) of this section.

* * * * *

(viii) Benton Clean Air Authority (BCAA), 650 George Washington Way, Richland, WA 99352.

Note: For a table listing BCAA's delegation status, see paragraph (c)(10) of this section.

* * * * *

(c) * * *

(10) * * *

DELEGATION STATUS FOR PART 61 STANDARDS—REGION X

Subpart	AK	ID	Oregon		Washington							
	ADE C[1]	IDE Q[2]	ODE Q[3]	LRAP A[4]	Ecology[5]	BCA A[6]	NWAP A[7]	OAPC A[8]	PSCA A[9]	SCAPC A[10]	SWAPC A[11]	YRCA A[12]
A. General Provisions[13]	X				X	X	X	X	X	X	X	X
B. Radon from Underground Uranium Mines												
C. Beryllium					X	X	X	X	X	X	X	X
D. Beryllium Rocket Motor Firing					X	X	X	X	X	X	X	X
E. Mercury	X				X	X	X	X	X	X	X	X
F. Vinyl Chloride					X	X	X	X	X	X	X	X
H. Emissions of Radionuclides other than Radon from Dept of Energy facilities												
I. Radionuclides from Federal Facilities other than Nuclear Regulatory Commission Licensees and not covered by Subpart H												
J. Equipment Leaks of Benzene	X				X	X	X	X	X	X	X	X
K. Radionuclides from Elemental Phosphorus Plants												
L. Benzene from Coke Recovery					X	X	X	X	X	X	X	X
M. Asbestos	[1]X				[5]X	[6]X	X	[8]X	X	X	X	X
N. Arsenic from Glass Plants					X	X	X	X	X	X	X	X
O. Arsenic from Primary Copper Smelters					X	X	X	X	X	X	X	X
P. Arsenic from Arsenic Production Facilities					X	X	X	X	X	X	X	X
Q. Radon from Dept of Energy facilities												
R. Radon from Phosphogypsum Stacks												
T. Radon from Disposal of Uranium Mill Tailings												
V. Equipment Leaks	X				X	X	X	X	X	X	X	X
W. Radon from Operating Mill Tailings												
Y. Benzene from Benzene Storage Vessels	X				X	X	X	X	X	X	X	X
BB. Benzene from Benzene Transfer Operations					X	X	X	X	X	X	X	X
FF. Benzene Waste Operations	X				X	X	X	X	X	X	X	X

[1] Alaska Department of Environmental Conservation (1/18/97)

Note: Alaska received delegation for § 61.145 and § 61.154 of subpart M (Asbestos), along with other sections and appendices which are referenced in § 61.145, as § 61.145 applies to sources required to obtain an operating permit under Alaska's regulations. Alaska has not received delegation for subpart M for sources not required to obtain an operating permit under Alaska's regulations.

[2] Idaho Division of Environmental Quality.

[3] Oregon Department of Environmental Quality.

[4] Lane Regional Air Pollution Authority.

[5] Washington Department of Ecology (7/1/00)

Note: Delegation of subpart M of this part applies to major Title V sources only, including Hanford. (Pursuant to RCW 70.105.240, only Ecology can enforce regulations at Hanford).

[6] Benton Clean Air Authority (7/1/00)

Note: Delegation of subpart M of this part applies to major Title V sources only (excluding Hanford).

[7] Northwest Air Pollution Authority (7/1/99).

[8] Olympic Air Pollution Control Authority (July 1, 2000).

Note: Delegation of subpart M of this part applies to major Title V sources only.

[9] Puget Sound Clean Air Agency (7/1/99).

[10] Spokane County Air Pollution Control Authority (7/1/00).
[11] Southwest Air Pollution Control Authority (8/1/98).
[12] Yakima Regional Clean Air Authority (7/1/00).
[13] Authorities which are not delegated include: §§ 61.04(b); 61.12(d)(1); 61.13(h)(1)(ii) for approval of major alternatives to test methods; § 61.14(g)(1)(ii) for approval of major alternatives to monitoring; § 61.16; § 61.53(c)(4); any sections in the subparts pertaining to approval of alternative standards (i.e., alternative means of emission limitations), or approval of major alternatives to test methods or monitoring; and all authorities identified in the subparts (i.e., under ''Delegation of Authority'') that cannot be delegated. For definitions of minor, intermediate, and major alternatives to test methods and monitoring, see memorandum from John Seitz, Office of Air Quality Planning and Standards, dated July 10, 1998, entitled, ''Delegation of 40 CFR Part 63 General Provisions Authorities to State and Local Air Pollution Control Agencies.''

Note to paragraph (c)(10): Dates in parenthesis indicate the effective date of the federal rules that have been adopted by and delegated to the state or local air pollution control agency. Therefore, any amendments made to these delegated rules after this effective date are not delegated to the agency.

PART 63—[AMENDED]

1. The authority citation for part 63 continues to read as follows:

Authority: 42 U.S.C. 7401, *et seq.*

Subpart E—Approval of State Programs and Delegation of Federal Authorities

2. Section 63.99 is amended by revising the table in paragraph (a) (47)(i) to read as follows:

§ 63.99 Delegated Federal authorities.

(a) * * *

(47) * * *

(i) * * *

DELEGATION STATUS FOR PART 63 STANDARDS—STATE OF WASHINGTON

Subpart	Ecology [2]	BCAA [3]	NWAP A [4]	OAPCA [5]	PSCAA [6]	SCAPCA [7]	SWAPCA [8]	YRCAA [9]
A General Provisions [1]	X	X	X	X	X	X	X	X
D. Early Reductions	X	X	X	X	X	X	X	X
F. HON–SOCMI	X	X	X	X	X	X	X	X
G. HON–Process Vents	X	X	X	X	X	X	X	X
H. HON–Equipment Leaks	X	X	X	X	X	X	X	X
I. HON–Negotiated Leaks	X	X	X	X	X	X	X	X
L. Coke Oven Batteries	X	X	X	X	X	X	X	X
M. Perchloroethylene Dry Cleaning	[2] X		X		X		X	[9] X
N. Chromium Electroplating	X	X	X	X	X	X	X	X
O. Ethylene Oxide Sterilizers	X	X	X	X	X	X	X	X
Q. Industrial Process Cooling Towers	X	X	X	X	X	X	X	X
R. Gasoline Distribution	X	X	X	X	X	X	X	X
S. Pulp and Paper [10]	X	X	X	X	X	X	X	X
T. Halogenated Solvent Cleaning	X	X	X	X	X	X	X	X
U. Polymers and Resins I	X	X	X	X	X	X	X	X
W. Polymers and Resins II–Epoxy	X	X	X	X	X	X	X	X
X. Secondary Lead Smelting	X	X	X	X	X	X	X	X
Y. Marine Tank Vessel Loading			X		X		X	
AA. Phosphoric Acid Manufacturing Plants	X	X	X	X	X	X		X
BB. Phosphate Fertilizers Production Plants	X	X	X	X	X	X		X
CC. Petroleum Refineries	X	X	X	X	X	X	X	X
DD. Off-Site Waste and Recovery	X	X	X	X	X	X	X	X
EE. Magnetic Tape Manufacturing	X	X	X	X	X	X	X	X
GG. Aerospace Manufacturing & Rework	X	X	X	X	X	X	X	X
HH. Oil and Natural Gas Production Facilities	X	X	X	X	X	X		X
II. Shipbuilding and Ship Repair	X	X	X	X	X	X	X	X
JJ. Wood Furniture Manufacturing Operations	X	X	X	X	X	X	X	X
KK. Printing and Publishing Industry	X	X	X	X	X	X	X	X
LL. Primary Aluminum [11]	X		X		X			
OO. Tanks—Level 1	X	X	X	X	X	X		X
PP. Containers	X	X	X	X	X	X		X
QQ. Surface Impoundments	X	X	X	X	X	X		X
RR. Individual Drain Systems	X	X	X	X	X	X		X
SS. Closed Vent Systems, Control Devices, Recovery Devices and Routing to a Fuel Gas System or Process	X	X	X	X	X	X		X
TT. Equipment Leaks—Control Level 1	X	X	X	X	X	X		X
UU. Equipment Leaks—Control Level 2	X	X	X	X	X	X		X
VV. Oil-Water Separators and Organic-Water Separators	X	X	X	X	X	X		X
WW. Storage Vessels (Tanks)—Control Level 2			X		X			
YY. Source Categories: Generic MACT			X		X			
CCC. Steel Pickling—HCl Process Facilities and Hydrochloric Acid Regeneration Plants			X		X			
DDD. Mineral Wool Production			X		X			
EEE.Hazardous Waste Combustors			X		X			
GGG. Pharmaceuticals Production			X		X			
HHH. Natural Gas Transmission and Storage Facilities			X		X			
III. Flexible Polyurethane Foam Production			X		X			
JJJ. Polymers and Resins IV			X		X		X	
LLL. Portland Cement Manufacturing			X		X			
MMM. Pesticide Active Ingredient Production			X		X			
NNN. Wool Fiberglass Manufacturing			X		X			
OOO. Manufacture of Amino Phenolic Resins								
PPP. Polyether Polyols Production			X		X			
RRR. Secondary Aluminum Production								
TTT. Primary Lead Smelting			X		X			
VVV. Publicly Owned Treatment Works								

DELEGATION STATUS FOR PART 63 STANDARDS—STATE OF WASHINGTON—Continued

Subpart	Ecology [2]	BCAA [3]	NWAPA [4]	OAPCA [5]	PSCAA [6]	SCAPCA [7]	SWAPCA [8]	YRCAA [9]
XXX. Ferroalloys Production: Ferromanganese & Silicomanganese			X		X			

[1] General Provision authorities which may not be delegated include: §§ 63.6(g); 63.6(h)(9); 63.7(e)(2)(ii) and (f) for approval of major alternatives to test methods; § 63.8(f) for approval of major alternatives to monitoring; § 63.10(f); and all authorities identified in the subparts (i.e., under ''Delegation of Authority'') that cannot be delegated. For definitions of minor, intermediate, and major alternatives to test methods and monitoring, see memorandum from John Seitz, Office of Air Quality Planning and Standards, dated July, 10, 1998, entitled, ''Delegation of 40 CFR Part 63 General Provisions Authorities to State and Local Air Pollution Control Agencies.''

[2] Washington Department of Ecology (July 1, 2000)

Note: Delegation of Subpart M to Ecology applies to part 70 sources only.

[3] Benton Clean Air Authority (July 1, 2000)

[4] Northwest Air Pollution Authority (July 1, 1999)

[5] Olympic Air Pollution Control Authority (July 1, 2000)

[6] Puget Sound Clean Air Agency (July 1, 1999)

[7] Spokane County Air Pollution Control Authority (July 1, 2000)

[8] Southwest Air Pollution Control Authority (August 1, 1998)

[9] Yakima Regional Clean Air Authority (July 1, 2000)

Note: Delegation of Subpart M to YRCAA applies to part 70 sources only.

[10] Subpart S of this part is delegated to these agencies as applies to all applicable facilities and processes as defined in 40 CFR 63.440, *except* kraft and sulfite pulping mills. The Washington Department of Ecology (Ecology) retains the authority to regulate kraft and sulfite pulping mills in the State of Washington, pursuant to Washington Administrative Code (WAC) 173–405–012 and 173–410–012.

[11] Subpart LL of this part cannot be delegated to any local agencies in Washington because Ecology retains the authority to regulate primary aluminum plants, pursuant to WAC 173–415–012.

Note to paragraph (a)(47): Dates in parenthesis indicate the effective date of the federal rules that have been adopted by and delegated to the state or local air pollution control agency. Therefore, any amendments made to these delegated rules after this effective date are not delegated to the agency.

[FR Doc. 01–16692 Filed 7–2–01; 8:45 am]

BILLING CODE 6560–50–P

ENVIRONMENTAL PROTECTION AGENCY

40 CFR Part 63

[FRL–6996–8]

Approval of Section 112(l) Authority for Hazardous Air Pollutants; Chemical Accident Prevention Provisions; Risk Management Plans; New Jersey Department of Environmental Protection

AGENCY: Environmental Protection Agency (EPA).

ACTION: Proposed rule.

SUMMARY: Pursuant to section 112(l) of the Clean Air Act (CAA), the New Jersey Department of Environmental Protection (NJDEP) requested delegation of the Federal Chemical Accident Prevention Provisions promulgated by EPA under section 112(r) of the CAA for all stationary sources with covered processes (subject sources) under its jurisdiction except those having certain specified flammable liquified petroleum gases (LPG). This action proposes to grant such authority. In the Rules section of this **Federal Register**, EPA is granting NJDEP the authority to implement and enforce the Toxic Catastrophe Prevention Act Program rule, effective July 20, 1998, at New Jersey Administrative Code (NJAC) 7:31–1.1 through 1.10 and NJAC 7:31–2.1 through 8.2 in place of the Federal Chemical Accident Prevention Provisions for all subject sources under NJDEP's jurisdiction. EPA retains the authority to regulate subject sources having processes covered only because they contain regulated quantities of LPG gases regulated under the New Jersey Liquified Petroleum Gas Act of 1950 (NJSA 21:1B). The direct final rule explains the rationale for this approval. EPA is taking direct final action without prior proposal because the Agency views this as a noncontroversial action and anticipates no adverse comments. If no adverse comments are received no further activity is contemplated. If EPA receives adverse comments, the direct final rule will be withdrawn and all public comments received will be addressed in a subsequent final rule based on this proposed rule. EPA will not institute a second comment period. Any parties interested in commenting should do so at this time. In the spirit of Executive Orders 13132 and 13175, and consistent with EPA policy to promote communications between EPA and State, local and tribal governments, EPA specifically solicits comments on this proposed rule from State, local and tribal officials.

DATES: Written comments must be received by August 2, 2001.

ADDRESSES: Written comments should be addressed to: Steven C. Riva, Chief, Permitting Section, Air Programs Branch, U. S. Environmental Protection Agency, Region 2, 290 Broadway, New York, New York 10007–1866, with a copy to Ms. Shirlee Schiffman, Chief, Bureau of Chemical Release Information and Prevention, New Jersey Department of Environmental Protection, P.O. Box 424, 22 South Clinton Avenue, Trenton, New Jersey 08625–0424. Copies of the submitted requests are available for public review at EPA Region 2's office during normal business hours (docket # A–2000–23). Any State responses to comments must be submitted to the Administrator within 30 days of the close of the public comment period.

FOR FURTHER INFORMATION CONTACT: Umesh Dholakia at (212) 637–4023

SUPPLEMENTARY INFORMATION:

Authority: This action is issued under the authority of section 112 of the Clean Air Act, as amended, 42 U.S.C. 7412.

Dated: May 25, 2001.

Kathleen C. Callahan,

Acting Regional Administrator, Region 2.

[FR Doc. 01–16562 Filed 7–2–01; 8:45 am]

BILLING CODE 6560–50–P

ENVIRONMENTAL PROTECTION AGENCY

40 CFR Parts 63 and 264

[FRL–7002–8]

NESHAP: Standards for Hazardous Air Pollutants for Hazardous Waste Combustors

AGENCY: Environmental Protection Agency (EPA).

ACTION: Proposed rule.

SUMMARY: EPA is proposing to take action on NESHAP: Standards for Hazardous Air Pollutants for Hazardous Waste Combustors. The revisions make targeted amendments to the regulations for hazardous waste burning cement kilns, lightweight aggregate kilns, and incinerators promulgated on September 30, 1999 (NESHAP: Final Standards for Hazardous Air Pollutants for Hazardous Waste Combustors). The revisions make improvements to the implementation of the emission standards, primarily in the areas of compliance, testing and monitoring. We are proposing these revisions to make it easier to comply with the September 30, 1999 final rule.

In the ''Rules and Regulations'' section of the **Federal Register**, we are amending the September 30, 1999 final rule without prior proposal to incorporate these revisions because we view the amendments as noncontroversial and anticipate no adverse comment. We have explained our reasons for this approach in the preamble to the direct final rule. If we receive adverse comment on a distinct amendment, however, we will withdraw the direct final action for that amendment and the amendment will not take effect. We will address all public comments in a subsequent final rule based on this proposed rule. We will not institute a second comment period on this action. Any parties interested in commenting on any amendment must do so at this time.

DATES: Written comments must be received by August 17, 2001.

ADDRESSES: If you wish to comment on this proposed rule, you must send an original and two copies of the comments referencing Docket Number F–2001–RC4P–FFFFF to: RCRA Information Center (RIC), Office of Solid Waste (5305G), U.S. Environmental Protection Agency Headquarters (EPA HQ), Ariel Rios Building, 1200 Pennsylvania Avenue, NW., Washington, DC 20460–0002; or, (2) if using special delivery, such as overnight express service: RIC, Crystal Gateway One, 1235 Jefferson Davis Highway, First Floor, Arlington, VA 22202. You may also submit comments electronically following the directions in the **SUPPLEMENTARY INFORMATION** section below.

You may view public comments and supporting materials in the RIC. The RIC is open from 9 am to 4 pm Monday through Friday, excluding Federal holidays. To review docket materials, we recommend that you make an appointment by calling 703–603–9230. You may copy up to 100 pages from any regulatory document at no charge. Additional copies cost $ 0.15 per page. For information on accessing an electronic copy of the data base, see the **SUPPLEMENTARY INFORMATION** section.

FOR FURTHER INFORMATION CONTACT: For general information, call the RCRA Call Center at 1–800–424–9346 or TDD 1–800–553–7672 (hearing impaired). Callers within the Washington Metropolitan Area must dial 703–412–9810 or TDD 703–412–3323 (hearing impaired). The RCRA Call Center is open Monday–Friday, 9 am to 4 pm, Eastern Standard Time. For more information on specific aspects of this proposed rule, contact Mr. Frank Behan at 703–308–8476, *behan.frank@epa.gov,* or write him at the Office of Solid Waste, 5302W, U.S. EPA, Ariel Rios Building, 1200 Pennsylvania Avenue, NW., Washington, DC 20460.

SUPPLEMENTARY INFORMATION: This document concerns NESHAP: Standards for Hazardous Air Pollutants for Hazardous Waste Combustors. For further information, please see the information provided in the direct final action that is located in the ''Rules and Regulations'' section of this **Federal Register** publication.

Submittal of Comments

You may submit comments electronically by sending electronic mail through the Internet to: *rcra-docket@epamail.epa.gov.* You should identify comments in electronic format with the docket number F–2001–RC4P–FFFFF. You must submit all electronic comments as an ASCII (text) file, avoiding the use of special characters or any type of encryption. The official record for this action will be kept in the paper form. Accordingly, we will transfer all comments received electronically into paper form and place them in the official record which will also include all comments submitted directly in writing. The official record is the paper record maintained at the RIC as described above. We may seek clarification of electronic comments that are garbled in transmission or during conversion to paper form.

You should not electronically submit any confidential business information (CBI). You must submit an original and two copies of CBI under separate cover to: RCRA CBI Document Control Officer, Office of Solid Waste (5305W), U.S. EPA, Ariel Rios Building, 1200 Pennsylvania Avenue, NW., Washington, DC 20460.

If you do not submit comments electronically, we are asking prospective commenters to voluntarily submit one additional copy of their comments on labeled personal computer diskettes in ASCII (text) format or a word processing format that can be converted to ASCII (text). It is essential that you specify on the disk label the word processing software and version/edition as well as the commenter's name. This will allow us to convert the comments into one of the word processing formats used by the Agency. Please use mailing envelopes designed to protect the diskettes. We emphasize that submission of diskettes is not mandatory, nor will it result in any advantage or disadvantage to any commenter.

I. Description of Proposed Amendments

Today's notice proposes specific changes to the NESHAP: Final Standards for Hazardous Air Pollutants for Hazardous Waste Combustors (Phase I) rule, published September 30, 1999 (64 FR 52828). After promulgation, commenters (primarily the regulated community) raised numerous issues through informal comments and during litigation settlement discussions. After considering the issues raised, we have decided to propose for comment a limited number of changes to the Phase I final rule, most of the proposed changes relating to compliance and implementation of the rule.

In the ''Rules and Regulations'' section of the **Federal Register**, we are amending the September 30, 1999 final rule without prior proposal to incorporate these revisions because we view the amendments as noncontroversial and anticipate no adverse comment. We have explained our reasons for this approach in the preamble to the direct final rule, and do not believe it necessary to repeat those discussions here. If we receive adverse comment on a distinct amendment, we will withdraw the direct final action for that amendment and the amendment will not take effect. We will address all public comments in a subsequent final rule based on this proposed rule. We will not institute a second comment period on this action. Any parties interested in commenting on any amendment must do so at this time.

For further information, please see the ''Rules and Regulations'' section of today's **Federal Register** publication.

II. How Can I Influence EPA's Thinking on This Rule?

In developing this rule, we tried to address the concerns of all our stakeholders. Your comments will help us improve this rule. We invite you to provide different views on options we propose, new approaches we haven't considered, new data, how this rule may effect you, or other relevant information. We welcome your views on all aspects of this rule. Your comments will be most effective if you follow the suggestions below:

- Explain your views as clearly as possible and why you feel that way.
- Provide solid technical and cost data to support your views.
- If you estimate potential costs, explain how you arrived at the estimate.
- Tell us which parts you support, as well as those you disagree with.
- Provide specific examples to illustrate your concerns. Offer specific alternatives.
- Refer your comments to specific sections of the proposal, such as the units or page numbers of the preamble, or the regulatory sections.

• Make sure to submit your comments by the deadline in this notice.

• Be sure to include the name, date, and docket number with your comments.

List of Subjects

40 CFR Part 63

Air pollution control, Hazardous substances, Reporting and recordkeeping requirements.

40 CFR Part 264

Air pollution control, Environmental Protection Agency, Hazardous waste, Insurance, Packaging and containers, Reporting and recordkeeping requirements, Security measures, Surety bonds.

Dated: June 18, 2001.

Christine Todd Whitman,

Administrator.

[FR Doc. 01–16427 Filed 7–2–01; 8:45 am]

BILLING CODE 6560–50–U

ENVIRONMENTAL PROTECTION AGENCY

40 CFR Parts 63, 264, 265, 266, and 270

[FRL–7001–9]

RIN 2050–AE79

NESHAP: Standards for Hazardous Air Pollutants for Hazardous Waste Combustors—Proposed Amendments

AGENCY: Environmental Protection Agency (EPA).

ACTION: Proposed rule.

SUMMARY: Under the Clean Air Act (CAA), EPA established new emissions standards for hazardous waste burning cement kilns, lightweight aggregate kilns, and incinerators on September 30, 1999 (NESHAP: Final Standards for Hazardous Air Pollutants for Hazardous Waste Combustors). Following promulgation of this final rule, the regulated community, through informal comments and through litigation, raised numerous issues related to specific requirements of the final rule. In response to relevant concerns, we are proposing and taking comment on certain targeted changes to the final rule. These regulatory changes do not propose to amend the numerical emission standards, but rather focus on improvements to the implementation of the emission standards, primarily in the areas of compliance, testing and monitoring.

DATES: Comments must be submitted by August 17, 2001.

ADDRESSES: If you wish to comment on this proposed rule, you must send an original and two copies of the comments referencing Docket Number F–2001–RC5P–FFFFF to: RCRA Information Center (RIC), Office of Solid Waste (5305G), U.S. Environmental Protection Agency Headquarters (EPA HQ), Ariel Rios Building, 1200 Pennsylvania Avenue, NW, Washington, D.C. 20460–0002; or, (2) if using special delivery, such as overnight express service: RIC, Crystal Gateway One, 1235 Jefferson Davis Highway, First Floor, Arlington, VA 22202. You may also submit comments electronically following the directions in the **SUPPLEMENTARY INFORMATION** section below.

You may view public comments and supporting materials in the RIC. The RIC is open from 9 am to 4 pm Monday through Friday, excluding Federal holidays. To review docket materials, we recommend that you make an appointment by calling 703–603–9230. You may copy up to 100 pages from any regulatory document at no charge. Additional copies cost $ 0.15 per page. For information on accessing an electronic copy of the data base, see the **SUPPLEMENTARY INFORMATION** section.

FOR FURTHER INFORMATION CONTACT: For general information, call the RCRA Call Center at 1–800–424–9346 or TDD 1–800–553–7672 (hearing impaired). Callers within the Washington Metropolitan Area must dial 703–412–9810 or TDD 703–412–3323 (hearing impaired). The RCRA Call Center is open Monday–Friday, 9 am to 4 pm, Eastern Standard Time. For more information on specific aspects of this proposed rule, contact Mr. Frank Behan at 703–308–8476, *behan.frank@epa.gov,* or write him at the Office of Solid Waste, 5302W, U.S. EPA, Ariel Rios Building, 1200 Pennsylvania Avenue, NW, Washington, D.C. 20460.

SUPPLEMENTARY INFORMATION:

Submittal of Comments

You may submit comments electronically by sending electronic mail through the Internet to: *rcra-docket@epamail.epa.gov.* You should identify comments in electronic format with the docket number F–2001–RC5P–FFFFF. You must submit all electronic comments as an ASCII (text) file, avoiding the use of special characters or any type of encryption. The official record for this action will be kept in the paper form. Accordingly, we will transfer all comments received electronically into paper form and place them in the official record which will also include all comments submitted directly in writing. The official record is the paper record maintained at the RIC as described above. We may seek clarification of electronic comments that are garbled in transmission or during conversion to paper form.

You should not electronically submit any confidential business information (CBI). You must submit an original and two copies of CBI under separate cover to: RCRA CBI Document Control Officer, Office of Solid Waste (5305W), U.S. EPA, Ariel Rios Building, 1200 Pennsylvania Avenue, NW, Washington, D.C. 20460.

If you do not submit comments electronically, we are asking prospective commenters to voluntarily submit one additional copy of their comments on labeled personal computer diskettes in ASCII (text) format or a word processing format that can be converted to ASCII (text). It is essential that you specify on the disk label the word processing software and version/edition as well as the commenter's name. This will allow us to convert the comments into one of the word processing formats used by the Agency. Please use mailing envelopes designed to protect the diskettes. We emphasize that submission of diskettes is not mandatory, nor will it result in any advantage or disadvantage to any commenter.

Acronyms Used in the Rule

APCD—Air pollution control device
ASME—American Society of Mechanical Engineers
CAA—Clean Air Act
CEMS—Continuous emissions monitors/monitoring system
COMS—Continuous opacity monitoring system
CFR—Code of Federal Regulations
DOC—Documentation of Compliance
DRE—Destruction and removal efficiency
dscf—Dry standard cubic feet
dscm—Dry standard cubic meter
EPA/USEPA—United States Environmental Protection Agency
gr—Grains
HAP—Hazardous air pollutant
HWC—Hazardous waste combustor
MACT—Maximum Achievable Control Technology
NESHAP—National Emission Standards for HAPs
ng—Nanograms
NIC—Notice of Intent to Comply
NOC—Notification of compliance
OPL—Operating parameter limit
PM—Particulate matter
POHC—Principal organic hazardous constituent
ppmv—Parts per million by volume
RCRA—Resource Conservation and Recovery Act
TEQ—Toxicity equivalence

Table of Contents

Part One: Overview and Background for This Proposed Rule
I. What Is the Purpose of This Proposed Rule?
II. What Is the Phase I Rule?
III. What Related Actions Have Been Taken Since Publication of the Phase I Rule?
IV. How Can I Influence EPA's Thinking on this Rule?
Part Two: NESHAP—Proposed Amendments to the HWC Final Rule
I. Definition of Research, Development, and Demonstration Sources
II. Identification of an Organics Residence Time that is Independent of and Shorter than the Hazardous Waste Residence Time
III. Controls on APCDs after the Hazardous Waste Residence Time Has Expired
IV. Instantaneous Monitoring of Combustion Zone Pressure
V. Operator Training and Certification
VI. Bag Leak Detection System
VII. Time Extensions For Performance Testing if the Test Plan Has Not Been Approved
VIII. Flexibility in Operations During Confirmatory Performance Testing for Dioxin/Furan
IX. Waiving Operating Parameter Limits during Performance Testing
X. Method 23 as an Alternative to Method 0023A for Dioxin/Furans
XI. Calibration Requirements for Thermocouples
XII. Alternative Approach to Establish Operating Parameter Limits
XIII. Extrapolation of Operating Parameter Limits
XIV. Limit on Minimum Combustion Chamber Temperature for Cement Kilns
XV. Revisions to Operating Requirements for Activated Carbon Injection and Carbon Bed Systems
XVI. Clarification of Requirements to Confirm Carbon Bed Age
XVII. Revisions to Operating Parameter Limits for Wet Scrubbers
XVIII. Reproposal of kVA Limits for Electrostatic Precipitators and Request for Comment on Approaches to Ensure Baghouse Performance
XIX. How to Comply Temporarily with Alternative, Otherwise Applicable MACT Standards
XX. RCRA Permitting Requirements for Sources Entering the RCRA Process Post-Rule Promulgation
Part Three: Analytical and Regulatory Requirements
I. Executive Order 12866
II. Regulatory Flexibility Act (RFA), as Amended by the Small Business Regulatory Enforcement Fairness Act of 1996 (SBREFA), 5 U.S.C. 601 et. seq.
III. Executive Order 13045: "Protection of Children from Environmental Health Risks and Safety Risks"
IV. Environmental Justice Executive Order 12898
V. Unfunded Mandates Reform Act
VI. Executive Order 13132 (Federalism)
VII. Consultation with Tribal Governments
VIII. Paperwork Reduction Act
IX. National Technology Transfer and Advancement Act of 1995
Part Four: State Authority

Part One: Overview and Background for This Proposed Rule

I. What Is the Purpose of This Proposed Rule?

Today's notice proposes specific changes to the NESHAP: Final Standards for Hazardous Air Pollutants for Hazardous Waste Combustors (Phase I) rule, published September 30, 1999 (64 FR 52828). After promulgation, commenters (primarily the regulated community) raised numerous potential issues through informal comments and during litigation settlement discussions. After considering the issues raised, we have decided to propose for comment twenty amendments to the final rule, most of the proposed changes relating to compliance and implementation of the rule.

The ability of facilities to meet the September 30, 2002 compliance date may be dependent upon when these proposed changes are made final. While we expect to complete the rulemaking process and publish final amendments in a timely manner, we request comments on how the timing of these rule changes could impact compliance. In addition, we solicit comments on solutions to address compliance problems should they arise (e.g., use of § 63.1206(b)(4) to obtain an extension of compliance with the emission standards of up to one year).

In the "Rules and Regulations" section of the **Federal Register**, we are taking direct final action on thirteen additional amendments to the Phase I rule. If you wish to comment on those amendments, you must submit comments following the directions in the **ADDRESSES** section of that action.

The remaining sections of this part provide additional background information on the Phase I final rule.

II. What Is the Phase I Rule?

In the Phase I final rule, we adopted National Emissions Standards for Hazardous Air Pollutants to control toxic emissions from the burning of hazardous waste in incinerators, cement kilns, and lightweight aggregate kilns. These emission standards created a technology-based national cap for hazardous air pollutant emissions from the combustion of hazardous waste in these devices. Additional risk-based conditions necessary to protect human health and the environment may be imposed (assuming a proper, site-specific justification) under section 3005(c)(3) of the Resource Conservation and Recovery Act (RCRA).

Section 112 of the CAA requires emissions standards for hazardous air pollutants to be based on the performance of the Maximum Achievable Control Technology (MACT). These standards apply to the three major categories of hazardous waste burners—incinerators, cement kilns, and lightweight aggregate kilns. For purposes of today's proposal, we refer to these three categories collectively as hazardous waste combustors (HWC). Hazardous waste combustors burn about 80% of the hazardous waste combusted annually within the United States. The Phase I HWC MACT standards are expected to achieve significant reductions in the amount of hazardous air pollutants being emitted each year.

Additionally, the Phase I HWC MACT rule satisfies our obligation under RCRA (the main statute regulating hazardous waste management) to ensure that hazardous waste combustion is conducted in a manner protective of human health and the environment. By using both CAA and RCRA authorities in a harmonized fashion, we consolidate regulatory control of hazardous waste combustion into a single set of regulations, thereby minimizing the potential for conflicting or duplicative federal requirements.

More information on the Phase I HWC MACT rule is available electronically from the World Wide Web at *www.epa.gov/hwcmact.*

III. What Related Actions Have Been Taken Since Publication of the Phase I Rule?

On November 19, 1999, we issued a technical correction to the Phase I HWC MACT final rule (64 FR 63209). It clarified our intent with respect to certain aspects of the Notification of Intent to Comply and Progress Report requirements of the 1998 "Fast Track" final rule (63 FR 33783). Additionally, specific to the Phase I HWC MACT final rule, we corrected several typographical errors and omissions.

On July 10, 2000, we issued a second technical correction to the Phase I HWC MACT final rule (65 FR 42292). This action corrected additional typographical errors and clarified several issues to make the Phase I rule easier to understand and implement. This action also supplied one omission from the technical correction published on November 19, 1999, and made one correction to the related June 19, 1998 "Fast Track" final rule (63 FR 33783).

On July 25, 2000, the Court of Appeals for the District of Columbia decided *Chemical Manufacturers Association* v. *EPA,* 217 F. 3d 861 (D.C. Cir. No. 99–1236). The court held that EPA had the legal authority to

promulgate a requirement of early cessation of hazardous waste burning activity for those sources not intending to comply with the MACT emission standards. However, the court also held that we had not adequately explained our reasons for imposing the early cessation requirement. As a result, the court vacated the early cessation requirement and the related Notice of Intent to Comply (NIC) and Progress Report requirements. This vacature took effect on October 11, 2000. Since the requirements were not vacated until after sources were required to submit their NICs (on October 2, 2000), we determined that the court's action does not impact a source's ability to request a RCRA permit modification using the streamlined procedures of 40 CFR 270.42(j)(1). As long as a source complied with the NIC provisions (including filing the NIC before the provision was vacated), the source has met the requirements in 40 CFR 270.42(j)(1) and is therefore eligible for the streamlined RCRA permit modification process. The court's decision does not impact the emission standards or compliance schedule for the other requirements of the HWC NESHAP Subpart EEE.

On November 9, 2000, we issued a third technical correction to the Phase I HWC MACT final rule (65 FR 67268). It clarified our intent with respect to the applicability of new source versus existing source standards for hazardous waste incinerators. This action also clarified three issues to make the Phase I rule easier to understand and implement.

On May 14, 2001, we issued a final rule implementing two court orders that removed affected provisions of the Phase I HWC MACT final rule from the Code of Federal Regulations (66 FR 24270). This action removed the Notice of Intent to Comply provisions (discussed above) and certain operating parameter limits of baghouses and electrostatic precipitators.

IV. How Can I Influence EPA's Thinking on This Rule?

In developing this proposal, we tried to address the concerns of all our stakeholders. Your comments will help us improve this rule. We invite you to provide different views on options we propose, new approaches we haven't considered, new data, how this rule may effect you, or other relevant information. We welcome your views on all aspects of this proposed rule. Your comments will be most effective if you follow the suggestions below:

- Explain your views as clearly as possible and why you feel that way.
- Provide solid technical and cost data to support your views.
- If you estimate potential costs, explain how you arrived at the estimate.
- Tell us which parts you support, as well as those you disagree with.
- Provide specific examples to illustrate your concerns.
- Offer specific alternatives.
- Refer your comments to specific sections of the proposal, such as the units or page numbers of the preamble, or the regulatory sections.
- Make sure to submit your comments by the deadline in this notice.
- Be sure to include the name, date, and docket number with your comments.

Part Two: NESHAP—Proposed Amendments to the HWC Final Rule

I. Definition of Research, Development, and Demonstration Sources

Section 63.1200, Table 1, exempts research, development, and demonstration sources from the Part 63, Subpart EEE, hazardous waste combustor MACT standards.[1] We explained at promulgation that the hazardous waste combustor emission standards and compliance assurance requirements may not be appropriate for these sources because of their typically intermittent operations and small size. See 64 FR at 52839.

The rule defines research, development, or demonstration sources as those sources engaged in laboratory, pilot plant, or prototype demonstration operations: (1) Whose primary purpose is to conduct research, development, or short-term demonstration of an innovative and experimental hazardous waste treatment technology or process; and (2) where the operations are under the close supervision of technically-trained personnel.

Stakeholders express concern that the definition of demonstration source and the provision to allow unlimited one-year time extensions to the exemption may result in commercial, production sources taking inappropriate advantage of the exemption. We request comment on approaches to preclude inappropriate use of the exemption for demonstration sources. Approaches that we are considering include: (1) Clearly distinguishing between research and development sources versus demonstration sources, and limiting the exemption for demonstration sources to one year or less; or (2) requiring documentation of how a source's demonstration of an innovative or experimental hazardous waste treatment technology or process is different from the waste management services provided by a commercial hazardous waste combustor.

II. Identification of an Organics Residence Time That Is Independent of and Shorter Than the Hazardous Waste Residence Time

''Hazardous waste residence time'' is defined at § 63.1201(a) as the time elapsed from cutoff of the flow of hazardous waste into the combustor (including, for example, the time required for liquids to flow from the cutoff valve into the combustor) until solid, liquid, and gaseous materials from the hazardous waste, excluding residues that may adhere to combustion chamber surfaces, exit the combustion chamber. As stakeholders recognize, hazardous waste residence time has significant regulatory and enforcement implications. For example, if a source were to exceed an operating requirement or emission standard after the hazardous waste residence time has expired, it is not a violation if the exceedance occurred during start-up or shut-down, or because of a malfunction provided that the source follows the procedures and corrective measures prescribed in the start-up, shut-down, and malfunction plan. In addition, after the hazardous waste residence time has expired, sources may elect to comply with emission standards the Agency has promulgated under sections 112 and 129 of the Clean Air Act for source categories that do not burn hazardous waste in lieu of the hazardous waste combustor standards of Subpart EEE, Part 63. See § 63.1206(b)(1).[2]

Since promulgation of the hazardous waste combustor rule, stakeholders have raised the issue of whether a hazardous waste organics residence time should be defined that is independent of and shorter than the bulk solids residence time.

Industry stakeholders recommend an approach to calculate a hazardous waste organics residence time that defines when organic constituents in solid materials have been destroyed.[3] Although the concept has merit, several

[1] Hazardous waste research, development, and demonstration sources remain subject to RCRA permit requirements under § 270.65. See 64 FR at 52839.

[2] As discussed in Section XIX, if sources elect to comply temporarily with alternative section 112 or 129 MACT standards after the hazardous waste residence time has expired, sources nonetheless remain an affected source only under Subpart EEE for hazardous waste combustors.

[3] Email from David Case, Environmental Treatment Council, to Bob Holloway, EPA, with attachment entitled ''Proposed Method for Calculation of Hazardous Constituents Retention Time,'' dated June 7, 2000.

issues must be addressed prior to revising the rule to allow sources to petition the Administrator for case-by-case determinations of an organics residence time. We therefore are not proposing a change at this time but are requesting comment on the concept and implementation of an organic residence time.

As contemplated by stakeholders, the hazardous waste organics residence time would be independent of and considerably shorter than the bulk hazardous waste residence time discussed above. As with the bulk hazardous waste residence time, an organics residence time would have significant regulatory and enforcement implications. After the hazardous waste organics residence time has expired, an exceedance of the carbon monoxide or hydrocarbon emission standard or an operating parameter limit associated with the destruction and removal efficiency (DRE) or dioxin/furan emission standards would not be a violation if the exceedance occurred during start-up or shut-down or were caused by a malfunction and sources comply with the procedures and corrective measures prescribed in the start-up, shut-down, and malfunction plan. In addition, it seems appropriate to allow sources to elect to comply with standards the Agency has promulgated under sections 112 or 129 of the Clean Air Act to control organic emissions for source categories that do not burn hazardous waste in lieu of the hazardous waste combustor standards of Subpart EEE, Part 63. As discussed in Section III below, however, providing only a partial transition from the hazardous waste combustor MACT standards of Subpart EEE may be problematic.

A. What Is the Approach Stakeholders Recommend to Calculate Hazardous Waste Organics Residence Time?

Stakeholders suggest that a hazardous waste organics residence time can be calculated as the sum of: (1) The time for the solid matrix containing the organic constituents to reach the target temperature required to destroy the organics; (2) the time for the organic constituent to be destroyed at the target temperature; and (3) the time for the gas to pass through the combustion chamber and exit the air pollution control system. The time required for the organic constituents within the solid matrix to reach the target temperature would be calculated using standard heat transfer equations which are available in chemical engineering references. [4] Stakeholders state that these equations can be applied to various materials, assuming the thermal conductivity of the material. These equations also can be applied easily to various geometries, such as a 55 gallon drum (right circular cylinder), or to irregular shaped items resulting from shredder feed.

Stakeholders state that once the solid is at the target temperature the time for the hazardous constituent to be destroyed can be calculated using equations that are readily available from Dr. Dellinger's work on developing the low oxygen thermal stability index for hazardous organic compound incinerability. [5] Using Dellinger's kinetic models under low oxygen conditions, the destruction time for hazardous constituents can be calculated.

To implement this approach to calculate a hazardous waste organics residence time, stakeholders suggest that sources should include the retention time evaluation and calculations in a report developed by an independent Professional Engineer with combustion engineering expertise. Sources would submit the report to the Administrator for review and approval.

B. How Would Site-Specific Factors Be Addressed?

Stakeholders state that the general approach can be readily applied to various scenarios as necessary on a site-specific basis. Stakeholders have considered how some scenarios could be addressed, as discussed below, and believe that approaches to address other scenarios would become apparent as the approach is applied to the site-specific situation.

1. How Would Various Geometric Shapes and Sizes of Solids Be Addressed?

Stakeholders acknowledge that an incineration process can have several types of solid feed such as bulk solids, direct drum feed in various sizes, shredded waste feed, and other mechanisms. Each of these solid feed scenarios can be evaluated for the heat transfer step by assigning an appropriate geometry to the solid for use in the heat flux equations. Heat transfer will take place more rapidly in shredded waste feed, in which the particle size of the solids is reduced. At the other extreme is a monolith in a 55 gallon drum, which will require a longer time for the center point to reach the target temperature. The center point of the monolith can be considered the point where the organic constituent is located for ensuring a worst case for the heat transfer step. Site-specific feed can be modeled by evaluating the actual geometry and size of solid feed and post-shredder feed.

2. How Would the Thermal Conductivity of the Solid Be Determined?

The time for the solid mass to reach temperature will depend on the thermal conductivity of the solid mass. The thermal conductivity is a key parameter in the heat transfer equation. The types of solid feed managed at a particular site can be used to select a worst case material for thermal conductivity. Stakeholders present as an example a facility that feeds certain polymeric monolithic materials in 55 gallon drums. Certain polymers may have a low thermal conductivity that can be used as a worst case. References such as Perry's Chemical Engineering Handbook can be consulted to provide a range of thermal conductivities for consideration. For example, stakeholders note that polypropylene has one of the lower thermal conductivities of 0.08 BTU/hr-sq.ft.-°F (see Table 23–10 in Perry's Handbook). This might provide a good worst case value to use for the solid mass thermal conductivity for this source.

3. How Would a Worst-Case Organic Constituent Be Selected?

Stakeholders suggest that a worst-case hazardous organic constituent could be selected on the basis of its ranking in various incinerability indices, just as principal organic hazardous constituents (POHCs) are selected for demonstrating destruction and removal efficiency (DRE). A constituent that ranks high in both the heat of combustion and low oxygen thermal stability indices could be used. In addition, a few compounds with complex structures that would be expected to yield various decomposition byproducts could be modeled. Examples of such compounds are pentachlorophenol, perchloroethylene, and certain pesticides. Stakeholders suggest that Dr. Dellinger's work, cited above, can be consulted to select additional worst case constituents.

[4] Geankoplis, C.J., ''Transport Processes and Unit Operations,'' Chapters 3 and 4, Allyn and Bacon, Inc., Boston, 1978.

[5] B. Dellinger, et al, ''Development of a Thermal Stability Based Index of Hazardous Waste Incinerability,'' University of Dayton Research Institute Final Report Under EPA Cooperative Agreement CR–813938, November 15, 1991. Also, B. Dellinger, et al, ''Development of a Thermal Stability Based Index of Hazardous Organic Compound Incinerability,'' *Environmental Science and Technology,* 24, p.316, March 1990.

4. How Would the Target Destruction Temperature Be Selected?

Stakeholders suggest that target destruction temperatures can be selected based on the kinetic studies of Dr. Dellinger. Stakeholders state that Dellinger has generally found that any organic chemical and its organic byproducts can be completely destroyed at 800°C.[6] Also, the range of destruction temperatures published by Dellinger can be consulted to select a target temperature on a site-specific basis for the types of wastes that are managed.

5. How Would Paralytic and Starved Air Conditions Be Addressed?

Stakeholders acknowledge that certain solid geometries may result in the organic constituent being isolated from combustion air, such that pyrolytic conditions must be assumed. Nonetheless, stakeholders state that a destruction time can still be calculated and the low oxygen conditions can be incorporated into the kinetic model. Dellinger has published such calculations in developing the low oxygen thermal stability index for incinerability.[7] Stakeholders state that pyrolytic conditions would likely be required to be assumed for monolithic feed. They note that shredder-feed, however, substantially reduces the particle size of the solid feed, and mixing with combustion air is achieved.

6. How Would Heat Sink and Other Heat Consuming Factors Be Addressed?

Stakeholders acknowledge that other factors in a given waste may consume energy, requiring another step or two to the retention time calculation. For example, a solid waste monolith that is a low melting point solid will go through a melting transition that will consume heat before the temperature of the mass rises past the transition point. Stakeholders state that this step can be easily added to the retention time calculation, if necessary. Similarly, a waste may contain a pocket of water or other low boiling point material, and a step for enthalpy of vaporization may need to be added. Stakeholders note that these calculations can also be performed as a form of sensitivity analysis to determine how conservative the retention time calculation is.

[6] See Attachment 5 of ETC's Comments to the MACT Rule, Docket F–96–RCSP–FFFFF, filed August 19, 1996.

[7] Dellinger, B. et al, ''PIC Formation Under Pyrolytic and Starved Air Conditions,'' EPA Publication No. EPA/600/S2–86/006, July 1986.

B. What Are the Unresolved Issues About Stakeholders' Recommended Approach?

We acknowledge that the residence time for organic constituents in a solid matrix is generally less than the residence time for the bulk hazardous waste residue. Thus, ideally, sources should be eligible for the reduced regulatory and enforcement burden discussed above once the organics residence time has expired. One promising feature of the stakeholders' approach is that it would conservatively predict how long it takes the waste monolith to heat up to volatilize the organic constituent. We are concerned, however, that their approach does not explicitly address how long it would take for: (1) The generated volatiles or their potentially toxic intermediates to diffuse to the surface of the monolith where oxygen is present for destruction; or (2) alternatively for oxygen in the bulk gas to diffuse from the surface of the monolith to reach the volatiles. In lieu of accounting for the time required to destroy organic constituents under oxidative conditions, stakeholders' approach assumes that destruction would occur within solid matrices under pyrolytic conditions. Further, stakeholders believe that calculations developed by Dellinger while developing the low oxygen thermal stability index could be used to model those pyrolytic reactions. We request comments on whether Dellinger's work on low oxygen destruction would adequately model destruction under the pyrolytic conditions that occur within solid matrices, with respect to either the time required for destruction of the initial organic constituent or the types of intermediates that would be formed and the time required to destroy the intermediates. Finally, we request comments on whether it is practicable to perform valid engineering calculations for multiple waste streams that are not homogenous and that contain multiple organic constituents of concern.

We request comment on stakeholders' approach to calculate an organics residence time and specifically whether it can be revised to address our concerns.

III. Controls on APCDs After the Hazardous Waste Residence Time Has Expired

For sources equipped with a dry particulate matter control device, we propose to maintain the semivolatile metal, low volatile metal, and particulate matter[8] emission standards and the associated particulate matter control device operating requirements after the hazardous waste residence time has expired and until the control device undergoes a complete cleaning cycle (e.g., for all compartments of a baghouse; for all fields of an electrostatic precipitator).[9] For sources equipped with activated carbon injection, the dioxins/furans and mercury emission standards would also continue to apply after the hazardous waste residence time has expired until the control device undergoes a complete cleaning cycle.

A. What Concern Would This Requirement Address?

Dry particulate matter emission control devices such as electrostatic precipitators and baghouses retain collected particulate matter in the device until the sections of the device are cleaned sequentially, e.g., rapping of electrostatic precipitator plates, bag cleaning. This retained particulate matter contains metal hazardous air pollutants other than mercury due to its volatility. In addition, if the source is equipped with activated carbon injection, the collected particulate matter also will contain mercury and dioxins/furans. Our concern is that these pollutants could be emitted at levels exceeding the hazardous waste combustor emission standards after the hazardous waste residence time has expired.

After the hazardous waste residence time has expired, sources may choose to comply with MACT standards the Agency has promulgated under sections 112 and 129 of the Clean Air Act for source categories that do not burn hazardous waste in lieu of the Subpart EEE standards. See § 63.1206(b)(1).[10] If sources choose to comply with those

[8] The particulate matter emission standard is included because particulate matter is a surrogate for metal hazardous air pollutants other than mercury, the enumerated semivolatile metals, and the enumerated low volatile metals.

[9] If sources comply with the semivolatile and low volatile metal emission standards without emissions testing by assuming all metals in feedstreams are emitted, and therefore do not rely on the particulate matter control device to comply with the emission standards for these metals, the proposed requirements to maintain compliance with the semivolatile and low volatile metals emission standards and control device operating parameter limits would not apply.

[10] As discussed in Section XIX of the text, if sources choose to comply with otherwise applicable section 112 or 129 requirements (e.g., Subpart LLL for cement kilns) after the hazardous waste residence time has expired, sources remain an affected source under Subpart EEE only. Sources would comply with those otherwise applicable MACT standards under an alternative mode of operation that sources would specify under § 63.1209(q).

otherwise applicable MACT standards, we are concerned that these standards may not adequately ensure that the hazardous waste-derived pollutants remaining in the dry particulate matter control device are controlled to the level required by the hazardous waste combustor rules of Subpart EEE. For example, if the alternative particulate matter standard were substantially higher than the hazardous waste combustor MACT standard, sources may be able to operate the control device under less stringent operating levels (e.g., lower power to a field of an electrostatic precipitator) which could cause the accumulated particulate matter (containing hazardous waste-derived pollutants) retained within the device to be reentrained in the stack gas. This could allow hazardous waste-derived pollutants to be emitted at levels exceeding the hazardous waste combustor MACT emission standards. When the particulate matter control device undergoes a complete cleaning cycle, the accumulated hazardous waste-derived pollutants are removed, thus precluding an exceedance of the hazardous waste combustor emission standards.

B. Is It Necessary To Require Continued Compliance With the Limit on Gas Temperature at the Inlet to the Dry Particulate Matter Control Device?

We considered whether increasing the gas temperature at the inlet to the dry particulate matter control device, absent a requirement to maintain the temperature operating limit, could cause hazardous waste-derived semivolatile metals (and mercury and dioxins/furans if sources use activated carbon injection) contained in the accumulated particulate matter to volatilize and be emitted at levels that exceed an emission standard.

We initially conclude that, absent a gas inlet temperature limit, gas temperatures are not likely to increase to the levels necessary to volatilize enough semivolatile metals to cause an exceedance of the emission standards. This is particularly true if we consider that many sources should be able to complete a cleaning cycle of their electrostatic precipitator or baghouse within 30 minutes after the hazardous waste residence time has expired. We are concerned, however, that, for sources equipped with activated carbon injection, increases in inlet gas temperatures above the operating limit may potentially revolatilize captured mercury and dioxins/furans. We request comment on the extent to which mercury and dioxins/furans may revolatilize and be emitted because of increased gas temperatures in the short period after the hazardous waste residence time has expired and the cleaning cycle for the dry particulate matter control device has been completed.

C. Would the Proposed Requirement Increase Cleaning Cycle Frequency and Potentially Emissions of Hazardous Air Pollutants?

As discussed above, we propose to require continued compliance with the semivolatile metal, low volatile metal, and particulate matter standards (and the dioxin/furan and mercury standards if sources use carbon injection) after the hazardous waste residence time has expired until the dry particulate matter control device undergoes a complete cleaning cycle. However, we are concerned, that unless additional controls are applied, this requirement could potentially result in an increase in particulate emissions and associated hazardous air pollutants.

When a dry particulate matter control device is cleaned, collection efficiency is temporarily degraded. For example, when the plates in the last field of an electrostatic precipitator are rapped, some of the resuspended particulate matter is unavoidably emitted. For baghouses, when the bags are cleaned, typically using a pulse of air, the collection efficiency of the cleaned bags is reduced until a layer of particulate matter reforms on the bags. Thus, increasing the cleaning frequency of a baghouse decreases its collection efficiency.

To comply with the proposed requirement to clean the particulate matter control device before the Subpart EEE metals and particulate matter standards are waived in lieu of other standards, sources may want to initiate a cleaning cycle immediately after the hazardous waste residence time has expired. Further, they may want to restart the timing of the cleaning cycle beginning with the cleaning that occurs after the hazardous waste residence time has expired. Increasing the cleaning cycle frequency could potentially result in an exceedance of the emission standards, however, if compliance with the standards has not been demonstrated during performance testing at that cleaning cycle frequency. To ensure that the emission standards are not exceeded due to increased cleaning cycle frequency, sources may not increase the cleaning cycle frequency beyond the frequency used during the comprehensive performance test.

D. How Would This Requirement Be Implemented?

If sources elect to comply temporarily with the otherwise applicable section 112 or 129 Clean Air Act standards after the hazardous waste residence time has expired, sources would remain subject to certain Subpart EEE standards and associated compliance requirements until sources completed a cleaning cycle of the dry particulate matter control device: Particulate matter, semivolatile metals, low volatile metals, and, if sources use activated carbon injection, dioxin/furan and mercury. Given that sources remain an affected source only under Subpart EEE when sources elect to comply temporarily with otherwise applicable MACT standards, sources would identify this operating scenario as an alternative mode of operation under § 63.1209(q).[11] Consequently, sources would specify the applicable emission standards and compliance requirements for this alternative mode of operation as: (1) Those standards and compliance requirements of Subpart EEE that remain in effect; and (2) those otherwise applicable standards and compliance requirements established under section 112 or 129 (e.g., Subpart LLL for cement kilns). If an otherwise applicable section 112 or 129 standard or compliance requirement were more stringent than a Subpart EEE standard or compliance requirement that remains in effect, sources would comply with the more stringent standard or compliance requirement.

Exceedance of a Subpart EEE operating parameter limit (OPL) for a dry particulate matter control device after the hazardous waste residence time has expired but before a cleaning cycle of the device has been completed would be evidence of failure to maintain compliance with the Subpart EEE emission standards. Given that the hazardous waste residence time has expired, however, the exceedance need not be considered for the excessive exceedance reporting requirement under § 63.1206(c)(vi). Similarly, if the exceedance occurs because of a malfunction, the exceedance would not be evidence of failure to maintain compliance with an emission standard if the source followed the corrective measures prescribed in its startup, shutdown, and malfunction plan. Thus, the consequences of an exceedance would be the same after the hazardous waste residence time has expired whether the exceedance occurs before or

[11] See Section XIX below in the text for additional discussion on using § 63.1209(q) to specify operations under otherwise applicable section 112 or 129 MACT standards.

after the cleaning cycle has been completed if the source chose to continue to comply with the Subpart EEE emission standards (i.e., in lieu of otherwise applicable MACT standards under a different mode of operation). Having equivalent consequences of an exceedance of an OPL after the hazardous waste residence time has expired irrespective of whether the cleaning cycle has been completed is appropriate. Our objective is simply to ensure that the Subpart EEE OPLs for the dry particulate matter control device are maintained until the cleaning cycle is completed to minimize emissions of hazardous waste-derived HAPs to below the Subpart EEE emissions standards. Our intent is not to penalize a source for exceedances that may be attributable to unavoidable malfunctions after the source has taken the preventative measures to minimize emissions of HAPs by cutting off the hazardous waste feed and allowing the hazardous waste residence time to expire.

Some stakeholders have expressed initial concern with the technical feasibility of these proposed requirements. We will be considering these concerns prior to issuing a final rule.

IV. Instantaneous Monitoring of Combustion Zone Pressure

The final rule requires sources to control combustion system leaks by either: (1) Keeping the combustion zone sealed; (2) maintaining the maximum combustion zone pressure lower than the ambient pressure measured using an instantaneous monitor; or (3) using an alternative means to provide control of system leaks. See §§ 63.1201(a), 63.1206(c)(5)(ii), and 63.1209(p). The rule defines an ''instantaneous monitor'' as one that continuously samples, detects and records the regulated parameter without use of an averaging period. In today's notice, we propose to revise the combustion system leak requirements to better clarify the intent of this provision, and we are taking comment on whether we should allow sources to average pressure readings over short periods of time when demonstrating that their combustion system is maintained below ambient pressure.

After publication of the final rule, stakeholders expressed concern that the requirement to maintain the combustion zone pressure lower than ambient pressure (option 2 above) could result in an overly prescriptive requirement. Stakeholders believe this regulatory language can be interpreted to require sources to monitor and record combustion zone pressure at a frequency of every 50 milliseconds.[12] Stakeholders state such an interpretation would be problematic because of the enormous number of data points that must be recorded and because such a frequent monitoring frequency would greatly increase the number of automatic waste feed cutoffs. Stakeholders also requested that we clarify that combustion system leaks refer to fugitive emissions resulting from the combustion of hazardous waste, and not fugitive emissions that originate from nonhazardous process streams (e.g., the clinker product at a cement kiln).

After careful review of the regulatory language and after considering our original intent, we agree that the final rule is ambiguous and may be conservatively interpreted to require sources to monitor and record combustion zone pressure at a frequency of every 50 milliseconds. Therefore, in today's notice, we clarify that our intent is to require sources to use a pressure monitor and recording frequency that is adequate to detect combustion system leak events. We also clarify that the intent of the combustion system leak requirement is to prevent fugitive emissions from the combustion of hazardous waste, not fugitive emissions that originate from nonhazardous process streams.

To make these clarifications, we propose to modify the § 63.1201(a) definition of an instantaneous pressure monitor to read as follows: ''Instantaneous monitoring for combustion system leak control means detecting and recording pressure without use of an averaging period, *at a frequency adequate to detect combustion system leak events from hazardous waste combustion*'' (emphasis added).[13] We also propose to revise the § 63.1209(p) automatic waste feed cutoff regulatory language to read as follows: ''If you comply with the requirements for combustion system leaks under § 63.1206(c)(5) by maintaining the maximum combustion chamber zone pressure lower than ambient pressure to prevent combustion system leaks from hazardous waste combustion, sources must perform instantaneous monitoring of pressure and the automatic waste feed cutoff system must be engaged when negative pressure is not maintained'' (emphasis added).

We do not specify the monitoring and recording frequencies in the regulations, however, because sources differ in design and operation such that different monitoring and recording frequencies may be needed to ensure that fugitive emissions do not occur. Rather, sources and permit officials should determine on a site-specific basis what frequency of monitoring and recording would be appropriate. Each source should describe in the comprehensive performance test workplan and Notification of Compliance how their compliance method will ensure that fugitive emissions will not occur. We propose that this description specify the monitoring and recording frequency and how the monitoring approach will be integrated into the automatic waste feed cutoff system.

Stakeholders also suggest that we allow averaging of the pressure readings over short periods of time, e.g., a 5-second rolling average updated every second, in demonstrating the combustion system is maintained below ambient pressure. Averaging of pressure readings is less stringent than the current final rule instantaneous monitoring requirements. We request comment on whether such a monitoring approach is appropriate, and specifically, whether averaging pressure readings can adequately detect pressure excursion events that result in combustion system leaks.

V. Operator Training and Certification

On July 10, 2000, we issued a technical correction to the operator training and certification requirements of § 63.1206(c)(6) to clarify which employees are subject to the training and certification requirements and to note that the training and certification program should be tailored to the responsibilities of the employee. See 65 FR at 42295. Subsequent to this technical correction, incinerator stakeholders raised concerns about the requirement for incinerator control room operators and shift supervisors to be trained and certified under the American Society of Mechanical Engineers (ASME) Standard Number QHO–1–1994. Although the rule allows incinerator control room operators to be trained and certified under either a State program or ASME's program, stakeholders note that they are required to use the ASME program because there are no State programs at this time. Stakeholders raise the following concerns: (1) The scope of the ASME training and certification program is too broad; (2) the ASME certification

[12] The final rule preamble states that typical pressure transducers in use today are capable of responding to pressure changes once every 50 milliseconds. See 64 FR 52920.

[13] Note that this newly proposed definition removes the word ''sampling'' from the definition of instantaneous pressure monitor because a pressure monitor is not thought to physically withdraw a combustion gas sample.

program is problematic for new sources and newly hired operators because it requires 6 months of operating experience at the source before full certification may be awarded; (3) the ASME control room operator training and certification program is not necessary for shift supervisors; and (4) the ASME training and certification program cannot be implemented by the regulatory compliance date.

We provide below our reasons for preferring the ASME training and certification program over site-specific, source-implemented programs, but acknowledge stakeholders' concerns that the program may be more comprehensive than necessary to ensure compliance with the requirements of Subpart EEE. Accordingly, we propose to allow incinerator control room operators to be trained and certified under: (1) A site-specific, source-developed and implemented program; (2) the ASME program; or (3) a State program. We also conclude that it may be difficult for sources that choose to use the ASME program to fully certify their control room operators by the compliance date. Therefore, we propose to require only provisional certification by the compliance date for such sources. In addition, for sources that choose to use the ASME program, only provisional certification would be required for new employees and employees at new facilities prior to their assuming duties. Finally, we propose that control room operator training and certification is not necessary for shift supervisors to help ensure that the source operates within the limits established under the rule and that emissions of hazardous air pollutants are minimized.

A. How Do We Address Concerns About the ASME Training and Certification Program?

1. Is the Scope of the ASME Program Too Broad?

Incinerator stakeholders state that the scope of the ASME training and certification program for incinerator control room operators is too broad to apply generically to all control room operators. They prefer a tailored, site-specific, source-developed and implemented training and certification program.

The ASME program requires that control room operators be trained and certified to ensure a broad knowledge of operational, preventive maintenance, safety procedures, and practices for various types of incineration systems, emission control systems, and continuous emissions monitoring systems. Incinerator stakeholders state that there is no obvious benefit of requiring a broad knowledge of incineration issues; knowledge of only the equipment and operations at the operator's site are important. They question the benefit of, for example, an operator of a small liquid waste incinerator equipped with a wet scrubber knowing how to operate a rotary kiln incinerator equipped with a baghouse. They note further that it is unnecessarily time-consuming and stressful for operators that are unfamiliar with equipment they have never operated to undergo a rigorous training and certification program for that equipment. In addition, they note that the ASME standard was developed as a voluntary standard. Finally, they note that cement kiln and lightweight aggregate kiln control room operators may be trained and certified under a site-specific program.

The ASME program is comprised of a broad training curriculum that is implemented by each source followed by a provisional certification that is administered by ASME. Provisional certification is awarded after the operator passes a comprehensive, generic written test addressing operations of various types of incinerators and control systems. Operators with provisional certification may apply to ASME for full certification. Full certification is awarded after passing an on-site, site-specific oral examination.

We continue to believe that a broad training and certification program can be beneficial. A broad training program may enable control room operators to recommend modifications to existing equipment or make recommendations for new equipment, which may reduce HAP emissions. In addition, certification under a broad training curriculum would avoid the retraining and recertification that would be required if the source modifies the design or operation of the unit in a manner that could affect compliance with the emission standards and operating requirements of Subpart EEE.

Nonetheless, we agree with incinerator stakeholders that the broad scope of the ASME program may not be necessary to ensure compliance with the provisions of Subpart EEE. Accordingly, we propose to allow sources to use site-specific, source-developed and implemented training and certification programs, as discussed under Section B below.

2. Full Certification Under the ASME Program Cannot Be Achieved by the Compliance Date

The rule currently requires full ASME (or State) certification by the compliance date. We agree with stakeholders that this is not workable because ASME does not have the resources to implement the site-specific oral examination requisite for full certification by the compliance date. After passing the written examination and achieving provisional certification, control room operators must apply to ASME for the oral examination. Stakeholders indicate that it will take one half day per control room operator to administer the site-specific oral examination. For many facilities, the ASME oral examination team [14] will require approximately one week, including travel time, to administer the exam to all control room operators. Although ASME may train several examination teams, it is unlikely that full certification examinations can be implemented at all 149 hazardous waste incineration facilities prior to the compliance date.

To address this concern, we propose to require only provisional certification by the compliance date for sources that choose to use the ASME certification program. In addition, the operator would be required to submit an application to ASME for full certification and be scheduled for the certification examination. Finally, the operator would be required to achieve full certification within 1 year of the compliance date. We hope that providing this flexibility in the deadline for full certification will encourage use of the ASME program. We specifically request comment on whether the proposed deadlines for implementing the ASME certification program are appropriate.

3. Requiring Six Months of Operating Experience at the Source Before Full Certification Is Problematic

The ASME standard requires that control room operators have six months of operating experience at the source before they can be fully certified. This is a problem for new sources and for newly hired operators. We propose to preclude this problem by requiring only provisional certification before operators at new sources and newly hired operators could assume their duties. Also, we would require that

[14] The examination team is comprised of representatives from ASME, the hazardous waste industry, the operator's facility, and/or the regulatory agency or jurisdictional authority applicable to the facility.

provisionally certified operators apply to ASME for, and be scheduled for, full certification before they assume their duties. In addition, we would require that they achieve full certification within one year of assuming their duties. This will ensure that full certification will be achieved in a timely manner.

B. What Would Be the Requirements for Site-Specific, Source-Developed and Implemented Training and Certification Programs?

Under today's proposed rule, a source could choose to develop and implement a site-specific training and certification program in lieu of the ASME program or a State program. Certification under a site-specific program would be required by the compliance date given that the source will implement both the training and certification (i.e., written examination at a minimum). We note that cement and lightweight aggregate kiln sources are currently allowed to use site-specific training and certification programs because there is no ASME or other standard for these sources that addresses their hazardous waste burning activities. Because the requirements discussed below are appropriate for these sources as well, we propose to require that the requirements also apply to cement and lightweight aggregate kilns.

We propose to specify a training curriculum to ensure that the scope of the training is sufficient to ensure the control room operator can maintain compliance with the requirements of Subpart EEE. The certification program (i.e., written examination at a minimum) would be required to address the topics in the training curriculum. The training curriculum would be required to include the following topics: (1) Environmental concerns, including types of emissions; (2) basic combustion principals, including products of combustion; (3) operation of the specific type of combustor used by the operator, including proper startup, waste firing, and shutdown procedures; (4) combustion controls and continuous monitoring systems; (5) operation of air pollution control equipment and factors affecting performance; (6) inspection and maintenance of the combustor, continuous monitoring systems, and air pollution control devices; (7) actions to correct malfunctions or conditions that may lead to malfunctions; (8) residue characteristics and handling procedures; and (9) applicable Federal, state, and local regulations, including Occupational Safety and Health Administration workplace standards. This training curriculum is modeled after the requirements the Agency recently promulgated for commercial and industrial solid waste incinerators. See 65 FR 75338 (December 1, 2000). We believe this training is also appropriate for hazardous waste combustors.

To maintain certification, an operator would be required to complete an annual review or refresher course covering, at a minimum, the following topics: (1) Update of regulations; (2) combustor operation, including startup and shutdown procedures, waste firing, and residue handling; (3) inspection and maintenance; (4) responses to malfunctions or conditions that may lead to malfunction; and (5) operating problems encountered by the operator. These are the same requirements the Agency recently promulgated for commercial and industrial solid waste incinerators at § 60.2085, and we believe they are also appropriate for hazardous waste combustors.

C. Control Room Operator Training and Certification Would Not Be Required for Shift Supervisors

The final rule requires the same level of training and certification for shift supervisors and control room operators. Incinerator stakeholders question whether shift supervisors need to meet these training and certification requirements. Stakeholders note that shift supervisors often have administrative duties that are not closely related to the technical knowledge required to operate and maintain a combustor.

After reconsideration, we agree with stakeholders' reasons for not requiring that shift supervisors be trained and certified to the level of a control room operator. Accordingly, we propose to require that shift supervisors, like personnel other than control room operators, be trained and certified to the technical level commensurate with the employee's job duties.

D. A Certified Control Room Operator Must Be on Duty At All Times

We propose to revise the rule to clarify that a certified control room operator must be on duty at the source at all times the source is in operation. Having a certified operator present at all times is necessary to ensure compliance with the emission standards and operating requirements, and to take appropriate corrective measures when malfunctions occur.

VI. Bag Leak Detection System

Section 63.1206(c)(7)(ii) of the hazardous waste combustor rule prescribes baghouse operation and maintenance requirements for incinerators and lightweight aggregate kilns, including a requirement for the continuous operation of a bag leak detection system as a continuous monitor. Since promulgation of the rule, stakeholders have raised two issues: (1) Can less sensitive bag leak detectors be approved under the alternative monitoring provisions; and (2) why did we conclude that opacity monitors meeting revised Performance Specification 1 are not likely to be acceptable bag leak detectors.

A. Can Less Sensitive Bag Leak Detectors Be Approved Under the Alternative Monitoring Provisions?

Section 63.1206(c)(7)(ii)(D)(*1*) requires the bag leak detector system to be capable of continuously detecting and recording mass changes in particulate matter emissions at concentrations of 1.0 milligrams per actual cubic meter or less. Stakeholders state that monitors with higher detection limits are able to detect subtle changes in baseline, normal emissions as well as catastrophic events, and question whether these monitors can be approved under the alternative monitoring petitioning procedures of § 63.1209(g)(1).

We support the use of monitors with higher detection limits provided the monitor is sensitive enough to detect subtle increases in baseline, normal emissions, and we plan to develop guidance recommendations on this issue. We request comment on whether § 63.1206(c)(7)(ii)(D)(*1*) should be revised to explicitly allow the use of monitors with higher detection limits, or whether the existing alternative monitoring provisions coupled with guidance recommendations is sufficient. In addition, we request comment on how a source would document that a bag leak detection system, with a detection level higher than 1.0 milligrams per actual cubic meter, can detect subtle changes in baseline, normal mass emissions of particulate matter. For example, should we require site-specific tests to document that alternative detectors provide a measurable and repeatable change in opacity output with an increase in particulate matter mass emissions?

B. Why Did We Conclude That Opacity Monitors Meeting Revised Performance Specification 1 Are Not Likely To Be Acceptable Bag Leak Detectors?

EPA promulgated a significantly improved Performance Specification 1 (PS1) for opacity monitors on August 10, 2000. See 65 FR at 48914. We considered whether to allow use of

opacity monitors meeting PS1 as bag leak detectors, but conclude that they are not likely to be sensitive enough to detect subtle increases in mass particulate matter emissions from a source equipped with a well designed and operated baghouse.

Revised PS1 includes additional design and performance specifications as well as new test procedures that provide a profound improvement on opacity data accuracy and precision. Collectively, the additional measures provide a comprehensive, in-depth functional test of the complete measurement procedure, thereby eliminating many of the performance problems associated with previous opacity monitors.

The revisions go far beyond the previous version of PS1, drawing on recent technological advancements in optics, electronics, and information transfer. There are similar specifications for such monitors in Europe. The stipulation of automatic self-diagnosing capability is one of the many modern features incorporated into the new PS1. Taken together, the additional measures reflect a distinct new generation in the state-of-the-art of opacity monitors.

Notwithstanding the improvements that revised PS1 requires, opacity monitors are generally not acceptable for use as a bag leak detector because they are not sensitive enough to detect subtle increases in baseline, normal emissions. Baghouse emission opacity levels are very nearly zero at particulate matter concentrations below emission standards and are very near the lower detection limits of a continuous opacity monitoring system (COMS). COMS manufacturers have collectively raised the concern about COMS sensitivity limitations at low opacity levels. (See ASTM D–6216–98, Standard Practices for Opacity Monitor Manufacturers to Certify Conformance with Design and Performance Specifications.) Although the increase in particulate matter mass emissions that would trigger a measurable opacity change that a COMS could detect is usually site-specific and would depend on the particle size and reflective and refractive properties. We are concerned that particulate matter emission concentrations may have to double or triple before a COMS could detect a significant opacity change at the low opacity levels associated with baghouse emissions. For these reasons, we conclude that COMS meeting Performance Specification 1 are not likely to be suitable as bag leak detectors. Nonetheless, as discussed above, we request comment on whether an approach could be developed to allow use of bag leak detectors that have detection limits above 1.0 milligrams per actual cubic meter.

Moreover, we note that electrodynamic and triboelectric bag leak detectors have proven to be much more sensitive and cost about the same or less than COMS to install and operate. In addition, some particulate matter continuous emissions monitors (CEMS) have been shown to be able to detect very small changes in particulate matter mass emissions at low emission levels. If sources were to use a particulate matter CEMS as a bag leak detector, sources need not correlate the detector to particulate matter emission concentrations. Rather, sources would be required to document that the CEMS provides a measurable and repeatable change in output with an increase in particulate matter mass emissions.

VII. Time Extensions For Performance Testing if the Test Plan Has Not Been Approved

During the comment period of the final rule and after promulgation, stakeholders raised the concern that the rule requires sources to commence performance testing within 180 days after September 30, 2002, even if the test plan has not been approved. Although the rule requires submittal of the test plan 12 months prior to the scheduled test date to provide a nine-month review period, stakeholders are concerned that the test plan may not be approved at the conclusion of that review period. Stakeholders state that they may spend hundreds of thousands of dollars to conduct a test under an unapproved test plan, only to learn after the test that EPA or the state may not accept the results as a valid demonstration of compliance with the emission standards due to differences of opinion on test design. In the preamble to the final rule, we address this issue by stating that ''If permit officials nevertheless fail to act within the nine-month review and approval period, a source could argue that this failure is tacit approval of the plan and that later ''second-guessing'' is not allowable.'' See 64 FR at 52912. However, stakeholders are concerned that this preamble language does not guarantee that they will not have to repeat the test. Stakeholders recommend revising the rule to allow sources to wait until a test plan has been approved before conducting a performance test.

We are reluctant to deviate from the Part 63 General Provision's six-month deadline after the compliance date for conducting the initial comprehensive performance test. We continue to believe that an open-ended test date will not provide an incentive for either sources or regulatory officials to resolve differences related to a test plan, thereby unnecessarily delaying testing. Nonetheless, we acknowledge that there may be situations where a source and regulatory officials are making genuine efforts to complete review of the test plan, but for reasons beyond their control, the review cannot be completed prior to the testing deadline. Accordingly, we propose to revise the rule to address these particular situations.

Under today's proposal, a source may petition the Administrator, under the authority of § 63.7(h), to obtain a ''waiver'' of any performance test—initial or periodic performance test; comprehensive or confirmatory test. The ''waiver'' would not eliminate the test, but would be used to grant an extension of time to conduct the performance test. To qualify for the waiver, a source must make a good faith effort to comply with the testing requirements in a timely manner. First, as currently required, sources must submit a site-specific emissions testing plan and a continuous monitoring system performance evaluation test plan at least one year before a comprehensive performance test is scheduled to begin (see § 63.1207(c)(1)), or at least 60 days before a confirmatory performance test is scheduled to begin (see § 63.1207(d)). Sources also must submit all other documentation required by Subpart EEE to be included with the performance test plans. The submitted test plans must fulfill the substantive content requirements of §§ 63.1207(f) and 63.8(e). Second, a source must make a good faith effort to accommodate the Administrator's comments on the test plans. Finally, the Administrator must not take final action, through a notification of intent to deny (see § 63.7(c)(3)(i)(B)), to deny the source's test plan(s).

Under today's proposal, sources must submit to the Administrator a waiver petition or request to renew the petition under § 63.7(h), separately for each source, at least 60 days prior to the scheduled date of the performance test. The Administrator would approve or deny the petition within 30 days of receipt and promptly notify the source of the decision. The Administrator would not approve extensions of the test date for a duration exceeding 6 months, and the Administrator would include in granted petitions a sunset provision to end the waiver within 6 months.

To renew a waiver, we are proposing that sources must submit a revised petition under § 63.7(h)(3)(iii) at least 60 days prior to the end date of the most recently approved waiver petition. The Administrator could approve a revised

petition for a total waiver period up to 12 months. A performance test could not be delayed more than a total of 12 months, irrespective of the status of approval of the test plan.

If the Administrator denies a § 63.7(h) waiver petition, we are proposing that the source must commence the performance test, with or without approved test plans, by either the deadline provided by Subpart EEE or by the expiration date of their most recently approved waiver petition, whichever is later.

Sources would also need to address, in the waiver petition, the following requirements of § 63.7(h). A source must provide documentation to enable the Administrator to determine if ''the source is meeting the relevant standard(s) on a continuous basis * * *.'' See § 63.7(h)(2). For extension requests of the initial comprehensive performance test, a source must submit the Documentation of Compliance to assist the Administrator in making this determination. In addition, § 63.7(h)(3)(iii) requires sources to ''include information justifying the owner or operator's request for a waiver, such as the technical or economic infeasibility, or the impracticality, of the affected source performing the required test.''

In order to continue to keep the public informed of the source's compliance status, the source would need to notify the public (i.e., the source's public mailing list) of their § 63.7(h) petition to ''waive'' a performance test.

The following is an example time line indicating how the proposed § 63.7(h) waiver petitioning process would work for the initial comprehensive performance test. All end dates should be read as ''no later than'' X number of months. The time line assumes the source has submitted its performance test plans (i.e., for emissions testing and continuous monitoring system evaluation) on the deadline date—one year before the performance test must be conducted (i.e., sources submit the test plans 6 months prior to the compliance date).

0 time—Submittal of performance test plans for review (1 year prior to test date; 6 months prior to compliance date).

9 months—Administrator does not approve or deny test plans, even though the source has acted in good faith to obtain approval

10 months—Submittal of performance test waiver petition and notify public (2 months prior to test date).

11 months—Administrator approves or denies the performance test waiver (1 month after receipt of waiver).

12 months—Commence performance test if the Administrator denies waiver.

12 months + ≤6months—Extended performance test commencement date if the Administrator approves waiver.

16 months—If needed, submit performance test waiver renewal petition and notify public (2 months prior to sunset of latest approved waiver).

17 months—Administrator approves or denies renewal petition (1 month after receipt of renewal petition).

18 months—Maximum extension of test date for unrenewed performance test waivers.

18 months + ≤6months—Extended performance test commencement date with renewed waiver.

24 months—Maximum extension of test date for renewed performance test waivers.

VIII. Flexibility in Operations During Confirmatory Performance Testing for Dioxin/Furan

During the confirmatory performance test, the final rule requires sources to operate so that carbon monoxide or hydrocarbon levels, and operating parameter limits associated with the dioxin/furan emission standard, are within the range of the average values over the previous 12 months. Sources also must stay within the maximum or minimum value, as appropriate, that is allowed. See § 63.1207(g)(2). These requirements ensure that during the confirmatory performance test, dioxin/furan emissions are within the range of the normal to the highest allowable emissions.

Stakeholders express concern that it may be difficult to ''dial in'' operation of the combustor to the required range for each operating parameter simultaneously. Sources are particularly concerned about having to operate within a potentially narrow range of carbon monoxide levels for sources that normally operate close to the 100 ppmv limit. This is because carbon monoxide levels are dependent on many combustion-related factors and cannot be directly ''dialed in'' as can be done for other parameters (e.g., activated carbon injection federate).

Although this is not likely to be a widespread problem, we acknowledge there may be a problem in some situations. Accordingly, we propose today to revise the rule to: (1) Allow approval in the test plan for operations under a wider operating range for a particular parameter based on information justifying that operating within the required range may be problematic; and (2) allow the Administrator to accept test results during the finding of compliance based on operations outside of the range specified in the confirmatory test plan.

Allowing the Administrator to accept test results based on operations outside of the range specified in the test plan would address when a source did not anticipate a problem in maintaining the operating levels within the required range (and therefore did not request advance approval to do so), but because of unforeseen factors, were unable to maintain the required range. This provision would give permit writers discretion to accept emissions data obtained when operating outside of the prescribed range so that sources would not have to incur the costs of an additional confirmatory test. In determining whether to accept test results from operations outside of the range specified in the test plan, permit writers would consider factors including: (1) The magnitude and duration of the deviation from the required range; (2) the historical range of the parameter (e.g., the range between the 10th and 90th percentile time-weighted average values for the parameter); (3) the proximity of the emission test results to the standard; and (4) the reason for not maintaining the required range. These factors determine whether the operations are reasonably representative of normal operations and how important it may be that test operations be truly representative of normal operations.

IX. Waiving Operating Parameter Limits During Performance Testing

Section 63.1207(h) automatically waives the operating parameter limits (OPLs) during subsequent comprehensive performance tests under an approved performance test plan. After promulgation, stakeholders raised two concerns. They believe that: (1) OPLs defined in the Documentation of Compliance should be waived during the initial comprehensive performance test and associated pretesting; and (2) OPLs should be waived during testing and pretesting irrespective of whether the test plan has been approved.

A. Should We Waive OPLs During the Initial Comprehensive Performance Test?

Section 63.1211(d) requires sources to include in the operating record a Documentation of Compliance (DOC) that establishes limits on the operating parameters under § 63.1209 that, based

on an engineering evaluation, will ensure compliance with the emission standards. The DOC may be revised at any time prior to submitting the Notification of Compliance. If additional engineering information becomes available that leads sources to conclude that they can operate under less stringent OPLs during the initial comprehensive performance test and demonstrate compliance with the emission standards, the DOC may be revised accordingly. Therefore, we do not believe that additional regulatory language is needed to enable source to operate during pretesting or the initial comprehensive performance test under OPLs less stringent than those identified in the DOC. We specifically request comment on this issue.

B. Should We Allow the OPLs To Be Waived if the Test Plan Has Not Been Approved?

Section 63.1207(h) waives the OPLs during performance testing under an approved test plan. We required pretesting and testing operations to be conducted under an approved test plan as a prerequisite for the waiver. This will ensure that operations, when the OPLs are waived, are likely to remain in compliance with the emission standards. In retrospect, however, we acknowledge that stack emissions measurements will be taken during both pretesting (see § 63.1207(h)(2)) and testing. Given that there will be documentation of any exceedance of an emissions standard during a performance test, potentially indicating a violation during such testing, it is not necessary to require that the test plan be approved before the OPLs can be waived. Similarly, if a source records the results of pretesting, the OPLs should be waived without approval of the test plan. Accordingly, we propose to revise the rule to waive the OPLs during pretesting (if the source records the results of the pretest) and performance testing. See proposed § 63.1207(h).

Although stakeholders have raised concerns about testing under an unapproved test plan (see Section VII above), there may be instances where a source may choose to test under such conditions. Consequently, the regulatory revision appears to be warranted.

X. Method 23 as an Alternative to Method 0023A for Dioxin/Furans

The final rule requires use of Method 0023A to determine compliance with the dioxin and furan emission standard. See § 63.1208(b)(1). Based on discussions with stakeholders after promulgation of the final rule, we believe it is appropriate to request comment on amending the final rule to allow petitions for the use of Method 23 in lieu of Method 0023A.[15]

Method 23 is the Clean Air Act dioxin/furan air emission test method found in 40 CFR Part 60, Appendix A. Method 0023A is the RCRA dioxin/furan air emission test method found in SW–846.[16] The final rule requires use of Method 0023A because this method is the updated version of Method 23. At the time of final rule publication, we believed that the improvements to the updated method warranted use of Method 0023A.

Stakeholders request that we give sources the option to use Method 23 or Method 0023A because: (1) The dioxin/furan standard is based on emissions data that was collected using Method 23 procedures; (2) Method 0023A is more expensive because of additional analytical costs; and (3) Method 0023A results in higher detection limits.

Method 23 and Method 0023A are similar methods. Method 23 combines the front half of the filter and probe rinse with the back half of the sorbent and rinses to perform a single extraction and analysis. Recovery of spiked standards into the sorbent are used to serve as an indicator of overall recovery. Method 0023A differs from Method 23, primarily in that Method 0023A uses the addition of standards to both the filter (front half) and sorbent (back half), and then separates the front half and back half for analysis in order to determine the recovery from each half. They are separated in order to better quantify recoveries for both the back half and front half fractions. This is important, because low recoveries in Method 23 are sometimes associated with dioxin/furan contained in solid phase particulate that may go unnoticed due to the combined front half and back half analysis. This may be of particular importance for sources that use activated carbon injection, or sources whose particulate matter contains significant levels of carbonaceous material. In other words, Method 0023A was designed as an improvement to Method 23 by incorporating separate recovery, spiking, and analysis of front half and back half samples to improve the quality assurance of the front half and back half analysis. The benefits of Method 0023A compared to Method 23 include accurate recovery data and known data quality. The downsides to Method 0023A include higher analytical costs and possibly higher detection limits.

Although the detection limits of Method 0023A may be higher than Method 23 detection limits, we do not believe that these higher detection limits will adversely affect a source's ability to adequately demonstrate compliance with the dioxin/furan standard, as we explained in the technical support document to the final rule.[17] This is true because analytical detection limits have decreased over recent years.

We request comment on whether we should amend the final rule to give the option to use Method 23 in lieu of Method 0023A. We are considering allowing sources to petition the authorized regulatory agency to use Method 23 in lieu of Method 0023A. Under such an approach, a source would have to justify why the use of Method 23 is warranted. Factors that could be considered by the regulatory official in reviewing these petitions include: (1) The carbonaceous content of the particulate that is emitted from the source; (2) analytical costs; (3) data quality; and (4) detection limits. For example, under this approach, we believe that a source could address Method 23 data quality concerns by submitting previous Method 0023A results to the regulatory official that document: (1) The recovery percentages of the front and back half of the analysis; and (2) the amount of dioxin and furans present in the front half. Method 0023A results that indicate good front half recoveries could support a source's claim that Method 23 is an appropriate method to demonstrate compliance with the dioxin/furan emission standard.[18] The added data quality checks associated with Method 0023A may not be needed if the results of previous Method 0023A analyses indicate good front half recovery percentages. Method 23 may also be warranted if dioxin and furans are not detected, or are detected at low levels in the front half of Method 0023A.

[15] Sources can currently petition EPA to use alternative test methods pursuant to § 63.7(f). The petition process that we are requesting comment on would not require sources to submit the results of a Method 301 validation process as is required under § 63.7(f).

[16] Method 0023A was proposed on July 25, 1995 (see 60 FR 37974). EPA received comments on Method 0023A and later incorporated the method into SW 846 in a final rule on June 13, 1997 (see 62 FR at 32451).

[17] See "Final Technical Support Document for HWC Standards, Volume IV: Compliance with HWC MACT Standards," Chapter 16, July 1999.

[18] This assumes, however, that method recoveries do not significantly vary at a source for different emissions tests. Any petition to use Method 23 should address whether method recoveries are expected to change from one emission test to another.

XI. Calibration Requirements for Thermocouples

Section 63.1209(b)(2)(i) of the final rule requires verification of the calibration of each thermocouple or other temperature sensor at least once every three months. Stakeholders express concern that recalibration of each temperature measurement device every three months is a significant undertaking. Stakeholders explain that, for example, temperature measurement devices on the air pollution control train are typically flanged onto the process piping and/or vessels. To recalibrate these devices without shutting the combustor down is an involved process. Removing these measurement devices for recalibration would require the operator to enter a static value in the automatic waste feed cutoff system to avoid a cutoff, and have a technician equipped with appropriate personal protective equipment receive the appropriate line and equipment opening permits, and then try to safely remove the instrument from the process while the combustor is still running. For configurations that have pressurized portions of the air pollution control train, the combustor would be required to shut down to avoid release of fugitive emissions. Stakeholders question whether the benefits outweigh the burden of recalibrating each temperature device every three months.

Stakeholders also state that recalibration of pyrometers is particularly problematic. Optical pyrometers are often sealed at the factory to prevent adjustment of the calibration. To check calibration on an optical pyrometer is difficult and stakeholders believe it is not a task that should be undertaken every three months unless there are clear benefits.

It is not clear to us that recalibration of all types of temperature measurement devices every three months is as burdensome an undertaking as stakeholders suggest. Thermocouples are the most common temperature measurement device used for compliance assurance. We believe that their calibration can generally be confirmed without removing them from the combustor. Thermocouples may malfunction either by a failure in the circuit (*e.g.*, the junction between the two wires at the bead may break) or the electronics may drift. If the circuit fails, the thermocouple will give clearly erroneous readings. Drift in the electronics can be corrected without removing the thermocouple. We specifically request comment on whether thermocouples can be recalibrated without removing them from the combustor.

Although it may be impractical to calibrate the internal operations of a pyrometer every three months, as stakeholders suggest, there are other maintenance activities such as cleaning of the optics and alignment checks that will help ensure that the pyrometer is performing correctly. We specifically request comment on whether the rule should require that these and other maintenance activities should be performed every three months.

If based on review of comments to this notice and reevaluation we determine that recalibration of temperature monitoring devices every three months is not practicable, we would revise the rule to delete § 63.1209(b)(2)(i). In lieu of a generic recalibration requirement that applies to all temperature monitors, we would require that you develop an appropriate calibration procedure and frequency and include that information in the evaluation plan required by § 63.8(e)(3)(i).

XII. Alternative Approach To Establish Operating Parameter Limits

The rule requires sources to establish most operating parameter limits as the average of the test run averages of the comprehensive performance test. Each test run average is calculated by summing all the one-minute readings within the test run and dividing that sum by the number of one-minute readings. See 64 FR at 52922.

Stakeholders state that this is an unreasonably conservative approach to establish operating parameter limits in that sources would not be allowed to operate in the way that they did 50% of the time during the performance test (when demonstrating compliance with the emission standards). This may overstate the conservatism inherent in this approach.[19] Nevertheless, we believe that a conservative approach is warranted because: (1) These parameters can have a significant effect on emissions; and (2) the approach is consistent with how manual method emissions results are determined (*i.e.*, manual method emission test results for each run represent average emissions over the entire run).[20]

Stakeholders also maintain that it is not technically practicable to establish some operating parameter limits using the average of the test run averages. Stakeholders present examples including cement kiln minimum combustion chamber temperature (see discussion in Section XIV below), and secondary power input to an ionizing wet scrubber or wet electrostatic precipitator.

In light of stakeholders' concerns, we are considering an alternative approach to establish operating parameter limits that provides assurance of compliance with the emission standard: establishing multiple limits for a given parameter that ensures that the profile of the

[19] For example, if the duration of each run of the performance test were 60 minutes, establishing parameter limits based on the average of the run averages allow sources to continue to operate as during the performance test. This is because 1-minute values that are higher than the average would be off-set by 1-minute values that are correspondingly lower than the average. Because most performance test runs have a duration longer than 60 minutes, however, the ''average of the run averages'' approach coupled with an hourly rolling average averaging period for most parameter limits, will require that sources operate more conservatively than during the performance test as a practical matter.

[20] Petitioners in litigation challenging the underlying rule have maintained that the one-hour averaging time to demonstrate compliance with the dioxin standard effectively amends the standard. The argument goes that the one-hour averaging period is shorter than that used in the source's performance test. EPA disagrees; the dioxin standard does not prescribe any particular averaging time, or other monitoring regime, for achieving a temperature level, so that using a one-hour averaging time does not amend the standard. However, even if (against our view) the temperature monitoring requirement is considered to change the emission standard, it appears justifiable as a beyond the floor standard under CAA section 112(d)(2). First, the standard is readily achievable technically. Spray quenching, the means of control, merely requires turning of a control valve to allow quenching. USEPA, ''Final Technical Support Document for Hazardous Waste Combustor MACT Standards, Volume IV: Compliance with the Hazardous Waste Combustor Standards,'' July 1999, p. 2–16. Operators can readily determine when quenching is needed, since thermocouples report instantaneous temperature changes, allowing immediate reaction to temperature changes. Ibid, p. 2–10. Second, EPA has already considered this cost (*i.e.*, the cost of quenching) in determining the standards for HWCs. EPA does not believe that there would be any incremental cost associated with the one-hour averaging requirement, because it is based on the same spray quenching technology which is the basis for the standards already adopted. See also 64 FR at 52892 (finding that the cost of spray quenching technology for lightweight aggregate kilns is reasonable, in adopting the beyond-the-floor standard for dioxin/furans). In addition, the one-hour averaging requirement is needed to prevent exceedances of the emission standard itself, see Ibid, at 2–8 to 2–9 and 3–8 to 3–9 (documenting how net dioxin/furan emissions would increase over the amounts allowed by the emission standard without this requirement, but further explaining why the ten-minute averaging time that EPA initially proposed is not essential). See also EPA's Brief in *CKRC* v. *EPA*, no. 99–1457 (D.C. Cir. 2001) at pp. 113–120 (a copy of this brief is part of the record for this proposal). Finally, we do not believe there are any adverse non-air or energy impacts associated with the averaging requirement (and again, EPA has already assessed energy impacts and waste generation impacts of the standard when promulgating the standard in the first place). See generally USEPA, ''Final Technical Support Document for Hazardous Waste Combustor MACT Standards, Volume V: ''Emissions Estimates and Engineering Costs,'' July 1999 (RC2F–S0011) chapter 10.

parameter does not exceed the profile documented during the comprehensive performance test. We call this the ''matching-the-profile'' approach.

Under the matching-the-profile approach, a source would establish multiple limits for a given parameter that ensure that the profile of the parameter does not exceed the profile documented during the comprehensive performance test. This approach has the advantage of allowing operations at parameter levels above the average level of the performance test for the same period of time and at the same levels, as shown during the performance test. Provided that the source operates below the average level of the performance test for the same period of time, and at the same levels, as during the performance test. One disadvantage is that, to effectively implement the approach, sources would be required to establish multiple operating limits for a single parameter.

As an example of how this matching-the-profile approach would work for establishing the gas temperature operating limit at the inlet to an electrostatic precipitator, consider the following hypothetical gas temperature data for three runs of a comprehensive performance test. The individual run times are presented, and the total of the run times is nine hours.

TABLE 1.—ALTERNATIVE APPROACH TO ESTABLISH AN OPL WHEREBY THE PARAMETER PROFILE DOCUMENTED DURING THE COMPREHENSIVE PERFORMANCE TEST CANNOT BE EXCEEDED

[Example Parameter: Gas temperature at the inlet to an ESP.]

[Assume Run Times as Follows: Run 1–180 minutes; Run 2–150 minutes; Run 3–210 minutes. Total time of 540 minutes (9 hrs).]

Percent of time	1-Min avg temperature that was not exceeded the specified % of Time (°F)			Average of run averages	Time that avg run avg can be exceeded in any 9-hr block
	Run 1	Run 2	Run 3		
100% (max T)	405	415	425	415	0 min
90%	395	398	390	394	54 min
50%	375	380	375	377	270 min
25%	370	350	360	360	405 min

In this example, we have assumed that four operating limits would be needed to ensure adequately that the performance test profile is not exceeded: a maximum temperature that could not be exceeded, and three temperature limits that could be exceeded for prescribed periods of time during each 9-hour block average. In practice, the number of parameter limits would be established on a site-specific basis and would be a function of factors including: (1) The variability of the parameter during the test (i.e., range from the high to low value [21]); (2) whether the performance test emission levels were close to or well below the emission standard; and (3) the relationship between the parameter and emission levels. [22]

In the example presented above, 1-minute average temperature levels are ranked from highest to lowest for each run, and the temperature associated with various time percentiles (i.e., 100%, 90%, 50%, and 25%) are identified. In Run 1, for example, temperatures below 395°F were achieved 90% of the time. Then, a time-weighted average temperature across the runs is calculated for each of the percentiles. Finally, the time percentiles are converted to the number of minutes in a block period of time (corresponding to the time required to conduct all runs of the performance test). We now have a series of temperature limits that can be exceeded only for a specified period of time. Compliance with these time/temperature limits should ensure that the temperature profile of the performance test is not exceeded during normal operations, and that the emission standard is not exceeded.

We request comment on whether this approach to establish operating parameter limits as an alternative to calculating the limit as the average of the test run averages would be less burdensome for regulated sources while ensuring compliance with the emission standards. We also note that sources can request alternative monitoring approaches under § 63.1209(g)(1) and may request to use this (or other) alternative approach whether or not EPA finalizes this proposal. We request comment on whether we should explicitly include this approach in the rule, or use this discussion as guidance recommendations. Explicitly defining the approach in the rule may better facilitate efforts by sources to adopt the approach to their needs, and review and approval of the approach by regulatory officials.

XIII. Extrapolation of Operating Parameter Limits

Stakeholders suggest that the rule inappropriately penalizes sources that achieve comprehensive performance test emission levels well below the standard by establishing operating parameter limits based on performance test operations at those low emission levels. Operating under conditions to artificially increase emissions during testing (e.g., by detuning emission control equipment) may not be feasible or desirable from a worker/public health and cost perspective.

To address this concern, we request comment on whether the rule should allow extrapolation of an operating parameter limit [23] established as currently required to a higher limit (or lower limit if the parameter limit is a minimum limit) using a site-specific, empirically-derived relationship between the parameter and emissions of the pollutant in question.[24] An example is extrapolation of the gas temperature limit at the inlet to the dry particulate matter control device to a higher limit based on the relationship between gas temperature and dioxin/furan emissions. To use this approach, a source must document the relationship

[21] The greater the range of values for a parameter within a percentile, the less certain we can be that the performance test profile (and emission levels) will be maintained. This is because a source could theoretically operate for extended periods of time (i.e., longer than during the performance test) at the upper end of the range (or the lower end for parameters for which minimum limits are established).

[22] For example, more rather than fewer parameter limits would be appropriate to characterize the profile for gas temperature at the inlet to an electrostatic precipitator given that dioxin/furan emissions relate exponentially to inlet gas temperature.

[23] Requests to extrapolate metal feedrates would continue to be considered under § 63.1209(n)(2)(ii).

[24] In addition to using site-specific, empirically-derived relationships, we also request comment on whether the rule should allow use of established engineering principles that define the relationship between operating parameters and emissions to extrapolate operating limits and emissions.

empirically for their source. To remain in compliance with the emission standard, however, the temperature limit could be extrapolated to levels higher than 400 °F only if the extrapolated dioxin/furan emissions were below 0.2 ng TEQ/dscm.

Sources could not take advantage of this extrapolated gas temperature limit in this example without also extrapolating the gas temperature limit for compliance assurance with the semivolatile and low volatile metals standards.[25] This is because gas inlet temperature is a compliance parameter for both dioxin/furans and semivolatile and low volatile metals. We would also consider allowing extrapolation of the metals compliance assurance inlet gas temperature limit using engineering calculations to a temperature limit that would correspond to metals levels close to the emission standards.

We believe that extrapolated limits should be less than 100% of the standard. Such conservatism is important because sources would not have actually demonstrated compliance with the emission standards at the extrapolated operating parameter limit. We request comment on what upper level of extrapolation would be appropriate (e.g., 75%, 80%) and whether the upper level of extrapolation should vary depending on the level of confidence in the empirical relationship or other approach that is used to calculate the extrapolation.

The Administrator would grant (or deny) a petition to extrapolate an operating parameter limit on a case-by-case basis considering factors including whether: (1) The operating parameter values during the performance test were at the upper (or lower for minimum limits) range of historical, normal levels; (2) the extrapolated level sources request is warranted considering historical levels of the parameter; (3) it is impracticable to demonstrate compliance with the emission standard when operating at the desired (i.e., extrapolated) operating limit during the performance test; and (4) the extrapolation procedure will conservatively predict the relationship between the operating parameter and emissions. To determine if the extrapolation procedure conservatively relates the operating parameter to emissions, the Administrator would consider factors including how far the source requests to extrapolate the limit beyond the value calculated from the performance test and how close the emissions during the performance test were to the standard.

We also note that sources can request alternative monitoring approaches under § 63.1209(g)(1) and may request to use this (or other) alternative approach prior to promulgation of a final rule. We request comment on whether we should explicitly include this approach in the rule, or use this discussion as guidance recommendations. Explicitly defining the approach in the rule may better facilitate efforts by sources to adopt the approach to their needs, and review and approval of the approach by regulatory officials.

XIV. Limit on Minimum Combustion Chamber Temperature for Cement Kilns

Stakeholders have expressed concern that it is technically impracticable for cement kilns to establish a minimum combustion chamber temperature based on the average of the test run averages for each run of the comprehensive performance test. Stakeholders state that combustion chamber temperatures cannot be maintained at low enough levels for the duration of the comprehensive performance test to establish workable operating limits that would allow them to burn hazardous waste fuels economically without frequent waste feed cutoffs because of potential exceedences of the limit. Stakeholders indicate that combustion chamber temperature levels are fairly constant within a narrow range and note that there is a very narrow range of temperatures and feed composition in which a cement kiln must operate in order to produce quality clinker and a marketable product.

Stakeholders further note that they must take extreme actions under the current RCRA requirements to establish an economically viable minimum combustion chamber limit based on the average of the lowest hourly rolling averages for each run. Stakeholders relate that during one hour of each run of the RCRA compliance test, they must take unusual and potentially equipment-damaging steps to lower temperatures.[26] Those problems are compounded by the requirement in the MACT rule to establish the limit based on the average temperature level.

In addition, stakeholders note that it is difficult to accurately monitor combustion chamber temperature in a cement kiln. We already acknowledge this concern and, accordingly, the rule allows measurement of the temperature at a location that best represents, as practicable, the bulk gas temperature in the combustion zone. See § 63.1209(j)(1)(i). The rule also allows sources to petition the permit writer to request approval of an alternative temperature monitoring approach. See § 63.1209(g)(1).

We have responded, in the final rule Comment Response Document, to stakeholder's questions about the need for monitoring combustion chamber temperature by noting that combustion chamber temperature is a principal factor in ensuring combustion efficiency and destruction of toxic organic compounds. Although we acknowledge that a cement kiln inherently controls the kiln temperature to produce clinker, this inherent control may not be adequate to assure compliance with the dioxin/furan and destruction and removal efficiency emission standards. For example, we understand that cement kilns occasionally undergo upsets and produce substandard clinker. If lower than normal combustion chamber temperatures can result from an upset, we do not know how compliance with the emission standards can be assured.

Notwithstanding these reservations, and in light of stakeholders' continued concerns, we request comment on whether the rule should continue to require cement kilns to establish and comply with a minimum combustion chamber temperature limit. Stakeholders have indicated that they have produced additional data supporting their views. We also request comment on whether the alternative approaches discussed above which can be used to establish alternative operating parameter limits (i.e., match-the-profile and extrapolation) would address some of stakeholders' concerns with establishing a minimum

[25] A gas inlet temperature limit is not required, however, if the source feeds low levels of metals and complies with the semivolatile and low volatile metals standards without emissions testing by documenting compliance with the emissions standards assuming all metals that are fed are emitted. In addition, even if the source were required to comply with a lower gas temperature limit for compliance assurance for metals, there may still be advantages to establishing an extrapolated temperature limit for compliance with the dioxin/furan standard. For example, if the source had a performance test-based temperature limit (i.e., metals temperature limit) exceedance that did not exceed the extrapolated dioxin/furan-based limit, the temperature exceedance would not represent failure to maintain compliance with the dioxin/furan emission standard.

[26] We note that allowing sources to establish operating limits under current RCRA regulations based on the average minimum or maximum hourly rolling average (rather than the average of the average values as required under Subpart EEE) is intended to address routine deviations that can occur even though steady-state operating conditions are maintained. Modifying operating conditions during compliance testing to induce temporary, artificial perturbations is inappropriate. Such operations are not representative of operations under the test condition.

combustion chamber temperature limit for cement kilns. We note, again, that sources may use § 63.1209(g)(1) to request alternative monitoring approaches and need not wait for the Agency's final determinations subsequent to this notice.

XV. Revisions to Operating Requirements for Activated Carbon Injection and Carbon Bed Systems

The final rule requires sources using carbon beds or activated carbon injection systems to limit particulate matter emissions to the level achieved during the comprehensive performance test. See §§ 63.1209(k)(5) and 63.1209(l)(3). We have since determined that: (1) It is inappropriate to explicitly require a site-specific particulate matter limit if a carbon injection system is used; and (2) particulate matter control downstream of a carbon bed is not a critical operating parameter to ensure compliance with the dioxin/furan and mercury emission standards. We propose, therefore, to delete the site-specific particulate matter limit requirement for activated carbon injection systems. We also propose to delete the requirement for sources equipped with carbon beds to establish particulate matter operating parameter limits to ensure compliance with the dioxin/furan and mercury emission standards.

Dioxin/furan and mercury will adhere to the solid carbon used in an activated carbon injection systems. The final rule requires a site-specific particulate matter limit for this type of control system because an increase in particulate matter emissions could also correspond to an increase in dioxin/furan and mercury emissions. After considering stakeholder comments, we believe it is inappropriate to explicitly require a site-specific particulate matter limit if a carbon injection system is used because the rule does not require continuous monitoring of particulate matter emissions with a continuous emission monitor. The use of a site-specific particulate matter limit was originally thought to go in tandem with the requirement to use particulate matter CEMS. Since we do not require sources to use particulate matter CEMS for compliance purposes, we believe it is inappropriate to require site-specific particulate matter limits.[27] Particulate matter emissions are instead controlled by complying with operating limits on the particulate matter control devices (e.g., minimum power to an electrostatic precipitator). Therefore, we propose to revise § 63.1209(k)(5) to require sources to establish operating limits on the particulate matter control device consistent with the approach used to control particulate emissions for compliance assurance with the semivolatile and low volatile metals emission standards.

We also believe that particulate matter control downstream of a carbon bed is not a critical operating parameter to ensure compliance with the dioxin/furan and mercury emission standards. We note that most, if not all, carbon bed systems in use today are positioned downstream from particulate matter control devices to minimize particulate buildup in the carbon bed. Carbon beds are also designed so that carbon leakage into the flue gas is minimized.[28] We, therefore, propose to delete the language in § 63.1209(k)(5) that requires control of particulate matter emissions to ensure compliance with the dioxin/furan and mercury standards for sources with a carbon bed.

XVI. Clarification of Requirements to Confirm Carbon Bed Age

When demonstrating compliance with the dioxin/furan (and mercury) emission standard during the initial comprehensive performance test, sources may use the manufacturer's specification for the limit on carbon bed age rather than the actual age of the bed during the performance test. If using the manufacturer's specification for carbon bed age, § 63.1209(k)(7)(i)(C) requires sources to recommend in the initial comprehensive performance test plan a schedule for subsequent dioxin/furan emissions testing, prior to the confirmatory performance test, that will be used to document to the Administrator that the initial limit on maximum bed age ensures compliance with the dioxin/furan emission standard.

Stakeholders express several concerns with these requirements: (1) How much testing and what type of testing is required to confirm bed life; (2) if the manufacturer's specification for bed life is such that it extends beyond the deadline to conduct the dioxin/furan confirmatory test, testing to confirm bed life should not be required before that dioxin/furan confirmatory test; and (3) given that a carbon bed controls mercury as well as dioxin/furan, testing to confirm bed life should be required to demonstrate compliance with both the dioxin/furan and mercury emission standards. We address each of these issues below.

A. How Much Testing and What Type of Testing Is Required to Confirm Bed Life?

We intended that testing equivalent to the dioxin/furan confirmatory test would be required to confirm the life of the carbon bed. Therefore, a test comprised of at least three runs would be required. The operating conditions would be the same as required for the dioxin/furan confirmatory test under § 63.1207(g)(2).[29]

B. What Happens If Bed Life Extends Beyond the Deadline for Dioxin/Furan Confirmatory Testing?

If the manufacturer's specification calls for a bed life beyond the deadline for confirmatory testing, the source must conduct the dioxin/furan confirmatory test by the deadline and also conduct the bed life confirmatory test at any time prior to the manufacturer's specification for bed life. We are proposing to revise the rule so that in this situation bed life confirmatory testing would not be required prior to dioxin/furan confirmatory testing.

If, for example, the manufacturer's specification for bed life was 3.5 years and the bed was installed just prior to the comprehensive performance test, the source must conduct the dioxin/furan confirmatory test within 2.5 years after the comprehensive performance test. In addition, the source must conduct a bed life confirmatory test within 3.5 years of the comprehensive performance test. Of course, sources may elect to forgo the additional year of bed life to avoid the expense of conducting the carbon bed life confirmatory test.

C. Should Bed Life Confirmatory Testing Include Testing To Confirm Compliance With Both the Dioxin/Furan and Mercury Emission Standards?

Given that carbon beds control both dioxin/furan and mercury emissions, bed life confirmatory testing must document compliance with both the dioxin/furan and mercury emissions standards. Not requiring mercury testing during bed life confirmatory testing was an oversight when we promulgated the rule. We are proposing to revise the rule accordingly. See proposed revision to § 63.1209(l)(4).

[27] The issue of the use of site-specific particulate matter limits to assure compliance with metal and dioxin/furan standards, when sources use a particulate matter CEM, will likely be addressed in any future particulate matter CEM proposal.

[28] See memo from S. Schliesser to M. Galbraith, June 7, 2000, regarding ''Carbon Bed Reentrainment Issue'' for more information.

[29] Given that carbon bed removal efficiency is closely related to combustion gas temperature at the inlet to the bed system, we request comment on whether the carbon bed life confirmatory test should be conducted at inlet gas temperatures at or near the maximum allowed (i.e., rather than at levels within the range of normal levels to the maximum allowed).

The bed life confirmatory testing for mercury must be conducted under normal conditions for the operating parameters used to control mercury emissions. See § 63.1209(l). This is the same concept that is used to confirm bed life for dioxins/furans, and for the dioxin/furan confirmatory test. Thus, the parameters specified under § 63.1209(l) must be held within the range of the average value over the previous 12 months and the maximum or minimum, as appropriate, that is allowed.

XVII. Revisions to Operating Parameter Limits for Wet Scrubbers

The final rule controls mercury emissions from hazardous waste combustors by: (1) Controlling the feedrate of mercury; (2) wet scrubbing to remove soluble mercury (e.g., mercuric chloride); and (3) carbon adsorption. See § 63.1209(l). There are specific operating parameter limits that apply to each control technology.

For hazardous waste combustors using wet scrubbers to control mercury, the operating parameter limits are identical to those that are required to assure compliance with the hydrochloric acid/chlorine gas emission standard. Specifically, those requirements include establishing hourly rolling average limits on minimum pH of the scrubber water based on operations during the comprehensive performance test. The hourly rolling average is established as the average of the test run averages. The pH of the scrubber water is an important parameter for chlorine control because, at low pH, the scrubber solution is more acidic and removal efficiency of hydrochloric acid and chlorine gas decreases.

A. What Is the Issue With the Minimum Operating Parameter Limit Requirement for Wet Scrubbers With Regard to Mercury Control?

Since promulgation of the rule, we've become aware of evidence that the scrubber liquid pH can have an important effect on the control and fate of mercury in wet scrubbers. In particular, various wet scrubber manufacturers and operators have observed that low pH (acidic) scrubber liquid solutions improve the control of mercury in hazardous waste combustor stack gases. There also is some recent work supporting the idea that scrubber liquid pH is an important factor in mercury capture and removal. In addition to low pH liquids increasing the control of elemental mercury, there's also evidence that high pH liquids may tend to reduce the captured soluble mercury back to the elemental form of mercury, which would then be re-released with the liquid during the liquid recycle. This line of thinking suggests that it may be necessary to establish a maximum scrubber liquid pH during the compliance test to ensure sufficient mercury control. However, a maximum scrubber liquid pH is opposite to the minimum liquid pH limit that is set and used to control chlorine emissions.

B. How Would a Low pH Scrubber Liquid Improve Mercury Control?

There are a number of reasons why a low pH scrubber liquid is thought to improve mercury control:

—Most elemental mercury formed in combustion is thought to favor conversion (or oxidation) to ionic mercury, such as $HgCl_2$, mercuric chloride, under typical air pollution control device conditions on hazardous and other waste combustors (e.g., see Lee and Kilgroe (1998), Hall (1991)).

—Oxidized mercury is very soluble in low pH scrubbing solutions (e.g., see Siret et al. (1997)). Also, strong reducing agents in scrubber liquid (which are more likely in higher pH scrubbing liquids) will reduce and revolatilize captured mercury.

—Scrubber liquids with high pH (i.e., added NaOH) may inhibit the oxidation of elemental mercury, and its subsequent absorption into the scrubber liquid (i.e., the ability to be controlled by the scrubber), see Soelberg (1998).

—In high pH reducing liquids, captured soluble ionic mercury may be reduced back to elemental forms in the scrubber liquid and then re-released during the liquid during recycle. The use of low pH solutions minimizes this possibility by favoring the formation of stable $HgCl_4$ (e.g., see Krivanek (1993)). Ionic mercury with a (Hg^{+2}) oxidation state is very soluble in water, especially in low pH scrubbing solutions. This enables the mercury to be readily absorbed from the flue gases. Elemental mercury has a low solubility and would typically pass through a wet scrubbing system unabsorbed. Without some way to avoid mercury revolatilization, it has been observed that elemental mercury emissions downstream of a wet scrubber can actually be higher than the inlet loading (see Siret *et al.* (1997), DeVito and Rosenhoover (undated).

Alternatively, there is some work on mercury control in coal fired utility power plants with limestone-based wet scrubbers indicating that changes in scrubber liquid pH in the range of 5 to 7 does not impact mercury control (see Miller, (undated), McDermott Technology (undated)). However, these data may not be directly applicable to the case of hazardous waste combustors due to the following: Basic scrubber liquids of pH greater than 7 were not evaluated; the use of limestone in these data, which is uncommon in hazardous waste combustor wet scrubbers; high levels of sulfur and lower levels of chlorine in coal stack gases; very low levels of mercury measured both upstream and downstream of the scrubber; and conflicting data on the predominant mercury species being emitted (whether it is elemental mercury or ionic mercury).

C. When Should a Maximum pH Limit Be Considered for Mercury Control?

The use of a operating parameter limits on maximum scrubber liquid pH may be appropriate to ensure that mercury emissions are minimized. In particular, there are several cases where requiring this as an operating parameter limit for mercury control may be desirable when:

—The scrubber is relied upon for achieving a certain mercury control efficiency in order to achieve the mercury emission standard.

—The facility has a history of a wide range of mercury concentrations in the feed waste streams.

—The facility has a history of a wide range of variations in scrubber liquid pH, oxidation potential, or composition.

—There is a wide range of HCl, NO_X, and SO_2 emission levels expected in the flue gas based on waste composition.

D. How Would We Set a Maximum pH Limit in the Scrubber Liquid?

If it is determined to be necessary to achieve a high level of mercury control, it may be appropriate to establish both an upper and a lower pH operating range. The lower pH limit maybe set based on either (1) manufacturer/designer recommendations (which would have to be reviewed and approved by the Agency and contained in the performance test plan), or (2) with a separate compliance test required for determining the lower pH operating parameter limit for chlorine. At that time, an operating range could be specified which would also consider the upper end of pH allowable for the desired mercury control. If the wet scrubber is staged, or if two wet scrubbers are operated in series, it may be appropriate to establish during the same performance test, a maximum pH limit on one scrubber for mercury control and a minimum pH limit on the other scrubber for chlorine control.

If a ''total species'' mercury continuous emissions monitor is used, then no monitoring of operating

parameters related to mercury is required. However, if only an elemental mercury monitor is used, wet scrubber operating parameters may also need to be monitored.

E. What Are Other Factors Affecting a Wet Scrubber's Ability to Control Mercury?

In addition to pH, there are a number of factors affecting the wet scrubber's ability to control mercury. For instance, it is well documented that the oxidizing potential of the scrubber solution has a direct impact on the control of elemental mercury. The recent use of scrubber liquid oxidizing additives such as $NaClO_2$, acidified $KMnO_3$, Na_2S, and Cl_2 has been shown to enhance elemental mercury control. Other factors influencing mercury control include: scrubber design, chloride concentration, mercury concentration and speciation at the inlet to the scrubber, and the use of special reagents (as mentioned above) to chemically convert and capture some of the elemental mercury.

F. What Are the Agency's Options To Ensure That the Scrubber Liquid pH Is Appropriate for Mercury Control?

We request comment on requiring sources with wet scrubbers to establish a maximum pH operating parameter limit for mercury control. This maximum pH level could be based on manufacturer specifications, compliance test results, or specified by the permit writer on a case-by-case basis. Another option is to require a scrubber liquid oxidation meter be used to comply with a minimum liquid oxidation potential limit. If chlorine is a concern, a pH range could be specified, or, as mentioned earlier, if two scrubbers are used, one could have a maximum pH specified for mercury control and a minimum pH specified for chlorine control.

XVIII. Reproposal of kVA Limits for Electrostatic Precipitators and Request for Comment on Approaches To Ensure Baghouse Performance

The final rule establishes operating parameter limits for electrostatic precipitators (ESPs) and baghouses: (1) Minimum kVA per field of an ESP; and (2) minimum and maximum pressure drop (delta P or dP) for each cell of a baghouse. See § 63.1209(m)(1)(ii and iii). At EPA's request, however, the D.C. Circuit has vacated these provisions in order that EPA repropose and seek additional comment on them. See 66 FR 24270. Today, we repropose the requirement to establish minimum limits on each field of an ESP and request comment on alternative approaches to ensure such performance. For baghouses, we request comment on alternative approaches to ensure performance.

A. Requirements To Ensure Electrostatic Precipitator Performance

Stakeholders express concern that limiting the kVA to each field of an electrostatic precipitator is problematic because: (1) It precludes the flexibility to shut down one or more fields of a multi-field electrostatic precipitator for maintenance while continuing hazardous waste burning; (2) it is difficult to establish minimum kVA limits on each field of the ESP during the comprehensive performance test that provide a wide enough operating envelop for economical operations; and (3) kVA to the first few fields of a multi-field ESP are not that important and should not be limited.

We respond to these concerns by noting that power distribution across the fields of an ESP is very important to performance. EPA testing at a cement kiln showed that individual field power level distribution was critical to performance.[30] When power input to the last field of a four-field ESP was decreased while total power input was held constant (i.e., by slightly increasing the power to the second and third fields), emissions of particulate matter doubled from 0.06 to 0.12 gr/dscf. In addition, recent comparisons of the results from predictive emission models to actual emissions indicate that power input by field is an important refinement to the code predictions.

Furthermore, we do not believe that limits on kVA to each field of the ESP are as burdensome as stakeholders state. For example, we do not believe it is a common problem to have a situation where a single field is down for repair and, thus, not operating at its minimum kVA, while the ESP is kept on line. Generally, when an ESP field needs repair, the ESP is taken off line. In addition, the comprehensive performance test may be structured to provide operational flexibility as needed. For example, a source seeking flexibility to continue burning hazardous waste with one field down could conduct the performance test under that mode of operation. Alternatively, the source could simulate the operational flexibility during the comprehensive performance test. For example, the source could conduct each run of the performance test with all fields operational 90% of the time, and with one field down 10% of the time. Then, the source would need to limit the time of operation with one field down to 10% of each block period of time (i.e., block average) equivalent to the time required to conduct the performance test.

Finally, another remedy may be to use the authority of § 63.1209(g)(1) to petition the permit writer for an alternative monitoring approach to ensure performance of the ESP is maintained.

Given that we believe that power distribution across the ESP is important to ensure performance and that minimum limits on power input to each field would not be overly burdensome, we today repropose the kVA limits originally promulgated at § 63.1209(m)(1)(iii).

Notwithstanding this proposal, however, we request comment on several alternatives to limiting kVA to each field of the ESP (which may ultimately serve as alternatives which can be pursued under § 63.1209(g)(1)), as discussed below. Note that several of these alternatives are not mutually exclusive. After considering comments and further evaluation, we also may decide to promulgate several alternatives.

1. Require an Increasing KVA Pattern Across the ESP

Under this approach, sources would be required to establish a minimum limit on total kVA to the ESP based on the performance test, and to assure that kVA levels increase from the inlet to outlet fields. In addition, we would require establishment of a minimum limit on total kVA to the ESP.

Maintaining a minimum total kVA with a pattern of progressively increasing kVA from the inlet fields to the outlet field is generally a good indicator that the entire ESP, as well as each field, is performing adequately. The rationale for this approach is that the power suppression effect from high particle concentrations progressively diminishes from the inlet field to the outlet field. Implementation of this approach would mean that the actual kVA levels for each field, or the absolute or relative difference in kVA from field to field that was achieved during the performance test, would not be considered in compliance assurance.

2. Limit KVA on Only the Back ⅓ of Fields

This approach would require establishment of minimum kVA to each of the last ⅓ of the fields in the ESP, as well as a minimum limit on total kVA

[30] See memorandum from Bruce Springsteen, EER–GC, to Bob Holloway, US EPA, entitled ''Relationship Between PM Emissions and ESP Total kVA Vs Field kVA'', dated November 21, 2000.

to the ESP based on the performance test.[31] The rationale for this approach has a similar basis to the approach in paragraph 1, but with an altered interpretation. Given that high particle concentration suppresses ESP power levels, the outlet fields can only achieve high power levels when the inlet fields are performing adequately. If the inlet fields are not performing well (as well as during the performance test), then the minimum kVA on the last few fields cannot be maintained.

Under this approach, if the source has a 2 or 3-field ESP, they would establish a minimum kVA limit on the last field. If it's a 4, 5, or 6-field ESP, then establish minimum kVA limits on the last 2 fields. If it's a 7, 8, or 9-field ESP, then establish minimum kVA limits on the last 3 fields.

3. Use a Continuous Monitor That Measures Relative Particulate Matter Loadings

Under this approach, sources would use a continuous monitor that can detect relative particulate matter loadings. The device must be sensitive enough to detect subtle increases in baseline, normal emissions. The monitor could be a baghouse leak detector, an opacity monitor, or a particulate matter continuous emissions monitoring system. Given that the source would be continuously monitoring relative particulate matter emissions under this approach, they would not need to establish kVA limits on the ESP.

To implement this approach, the source would establish an operating parameter limit that is based on the response from the continuous monitor during the comprehensive performance test. In addition, we would require interconnection of the limit to the automatic waste feed cutoff system. The source would also be required to take corrective measures as prescribed in the operations and maintenance plan if there was an increase in the baseline, normal response (i.e., generally well below the response during the performance test). This would be similar to how a bag leak detector is used to ensure that performance of a baghouse is maintained.

4. Use of Predictive Emission Monitoring Systems

This approach would use one of the available ESP performance models to characterize and correlate ESP performance with particulate matter emissions as a predictive emission monitoring system (PEMS). There are three personal-computer models (Electric Power Research Institute, EPA, and Southern Research Institute) that use the same first-principle equations. These models attest to using field-by-field electrical data, or similarly derived approaches, for compliance assurance. In combination with particulate matter measurements, each of these models has produced results with correlation coefficients greater than 0.98. Once adequately demonstrated to predict emissions, the model results would then serve as a compliance monitoring protocol able to account for any combination of power distribution levels and other contributing factors. If a source were to use this PEMS approach, they would have the flexibility to operate with a field out of operation and without the need for limits on field or total kVA while giving regulatory officials a means for ensuring compliance. This PEMS approach is based on a similar methodology advanced by industry that is undergoing review by EPA's Office of Air Quality Planning and Standards as a compliance assurance method (CAM).

Implementation of the PEMS could follow a two-pronged procedure:

a. Operations under the Green Zone. When particulate matter emissions are expected to be well below the particulate matter limit,[32] referred to as the ''green zone,'' the source would use a secondary indicator (e.g., opacity) to monitor compliance. For example, the green zone could be defined as when the secondary indicator is below 75% of the level predicted by the model when operating at the particulate matter limit. There would be no need to apply the model when the secondary indicator (i.e., and therefore emissions) remains in the green zone.

b. Operations under the Red Zone. When the secondary indicator value exceeds 75% of the level predicted by the model when operating at the particulate matter limit, the source would be in the ''red zone.'' During a red zone episode, they would apply the model at prescribed intervals (e.g., every 4 to 8 hours). Representative data (e.g., secondary voltage and current for each field, and gas temperature and flowrate) would be collected during the interval, averaged, and input to the model. Model results would predict the emission level and serve as the regulatory emission monitor for determining compliance. Depending on the model results, the source would respond appropriately.

If the results indicate that the particulate matter limit has not been exceeded, the source would continue to operate. If the source were still in the red zone, they would either continue to apply the model at the prescribed interval, or perform corrective measures (e.g., remedying the ESP performance problem) to return to the green zone. If the model results indicate that emissions exceeded the PM limit, then the source has failed to comply with one or more of the emission standards.[33]

B. Requirements To Ensure Baghouse Performance

The final rule required sources to establish limits on minimum and maximum pressure drop (delta P or dP) across each cell of the baghouse based on manufacturer specifications and to interconnect the limits with the automatic waste feed cutoff system. See § 63.1209(m)(1)(ii). The rule also required incinerators and lightweight aggregate kilns to install a bag leak detector and cement kilns to install opacity monitors. As noted earlier, this provision was vacated by the D.C. Circuit at EPA's request so that EPA could repropose and seek further comment on the issue.

We promulgated the requirement to establish dP limits because dP may provide an indication of adequate filter cake build-up to ensure performance. In addition, low dP may indicate the presence of filter holes or leakage between sections of the filter housing

[31] Stakeholders also suggest another approach whereby limits would be established on minimum total kVA to the ESP, and minimum kVA only to the last field of the ESP. We request comment on this alternative approach as well.

[32] The particulate matter limit would be the PM emission standard or a lower PM emission level that is extrapolated from comprehensive performance test emission levels to a level that ensures compliance with the semivolatile and low volatile emission standards (and the dioxin/furan emission standards if sources use activated carbon injection). For example, if during the performance test the PM emissions were 50% of the PM standard, but the semivolatile metal emissions were 75% of the semivolatile metal standard, the source's PM compliance limit to ensure compliance with the semivolatile metal standard would be 75% of the particulate matter standard. This compliance assurance approach is based on the reasonable assumption that for a percentage increase in PM emissions, emissions of metals (and dioxin/furan when activated carbon injection is used) will increase by that percentage or less. This is because low volatile metals are evenly distributed over the range of PM particle sizes, while semivolatile metals and dioxin/furan on adsorbed carbon, are enriched on the smaller particulates. As the performance of the PM control device degrades and PM emissions increase, some of the larger particles that were being captured would be emitted while the smaller particulates continue to be emitted as before.

[33] For example, if the predicted emissions were higher than the PM standard and the extrapolated PM emission levels associated with the semivolatile and low volatile metal standards, as well as the dioxin/furan standard if sources use activated carbon injection, the model results would be evidence that the source has exceeded all four emission standards.

while high dP may indicate the potential to create pinhole leaks, or bag blinding or plugging. We acknowledge, however, the minimum dP may not effectively detect fabric holes, especially in large facilities with multiple chamber filter housing units that operate in parallel.[34]

In addition, since promulgation of the rule, stakeholders state that system or manifold dP is the same as the dP for each cell or compartment. Therefore, monitoring dP for each cell is redundant and unnecessary. Stakeholders also state that baghouses for sources with large gas flowrates (e.g., a cement kiln) can have 30 or more cells and because of the large number of cells, establishing limits on, or even monitoring, dP is impracticable.

Finally, stakeholders recently submitted data confirming our concern that cell dP is not sensitive to substantial increases in opacity for large baghouses.[35] Stakeholders conducted experimentation at a cement kiln with a baghouse where dP was monitored for a cell in which collection performance was intentionally degraded. The baghouse has 32 cells and each cell is comprised of 56 bags. Prior to degrading the cell's performance, cell dP was monitored for several hours. The detector appeared to be responding appropriately to pressure changes as the pressure dropped to zero each time the cell was cleaned on a 25-minute cycle and then rapidly increased to approximately 3.5 inches water column. The pressure then gradually increased to 4 to 5 inches water column prior to the next cleaning cycle. While performance of one cell was artificially degraded, opacity was also monitored. There was no discernable change in cell dP during the episode while opacity increased dramatically from baseline levels of 4 to 5 percent to 10 to 12 percent. These opacity levels represent particulate matter emissions on the order of 0.01 gr/dscf at 5 percent opacity to 0.02 gr/dscf at 10 to 12 percent opacity. Although this experiment indicates that dP is not always sensitive to significant changes in opacity, it also shows that an opacity monitor can detect significant changes in mass particulate matter emissions at concentrations in the 0.01 to 0.02 gr/dscf range.

We generally disagree with many of stakeholders' views on the value of monitoring cell dP. System or manifold dP is usually higher than cell dPs because of the dP contributed by plenums (including dust buildup) and compartment isolation valving. Many baghouses operate with uneven cell dP because of complex factors.[36] For example, inlet flow design factors lead to gas flow imbalance among cells and to uneven cell dPs. Also, bag cleaning mechanisms degrade over time leading to varying levels of cleaning among cells and varying cell flow and dP. In addition, monitoring cell and system dPs is recommended by virtually all baghouse manufacturers and consultants because of the cost-effectiveness in preventing small problems from escalating into large ones.

We acknowledge again, however, that minimum cell dP may not effectively ensure performance of a large baghouse. Consequently, we are not reproposing limits on cell dP. Rather, we request comment on whether decisions to require monitoring of cell dP should be made on a site-specific basis (pursuant to § 63.1209(g)(1) or (g)(2)) considering factors such as: (1) Whether the baghouse is equipped with a device (e.g., bag leak detector) that is properly tuned and has the sensitivity to detect both broken bags (i.e., emission spikes) and gradual increases in baseline, normal emissions that may be caused by small holes; and (2) the approach that would used to identify the poorly performing cell when the detector notes a gradual degradation in performance; and (3) size of the baghouse. In addition, in situations where commenters believe that monitoring cell dP should be required, we request comment on whether cell dP should be monitored as an operating parameter limit that is interconnected to the automatic waste feed cutoff system, or whether cell dP monitoring should simply be one component of the source's operation and maintenance plan (under which appropriate corrective measures would be taken if cell dP were to fall below or above manufacturer specifications).

Pending final action on this notice, regulatory officials should use the authority of § 673.1209(g)(2) to determine on a site-specific basis what operating requirements may be appropriate to ensure that baghouse performance is maintained at levels that ensure compliance with the particulate matter, semivolatile metals, and low volatile metals emission standards (and the dioxin/furan and mercury standards if activated carbon injection is used).

XIX. How To Comply Temporarily with Alternative, Otherwise Applicable MACT Standards

Section 63.1206(b)(1)(ii) allows sources to stop complying with the emission standards and operating requirements of Subpart EEE temporarily after the hazardous waste residence time has expired and to comply with otherwise applicable Clean Air Act requirements promulgated under Sections 112 and 129,[37] provided the source: (1) Submits a one-time notice to the Administrator documenting compliance with those alternative standards;[38] and (2) documents in the operating record that they are complying with those alternative standards.

Stakeholders have asked how the transition between the Subpart EEE standards and the otherwise applicable Section 112 or 129 MACT standards would work. Specifically, stakeholders question: (1) whether sources would alternate as affected sources under different MACT standards for stack emissions, or become affected sources under different MACT standards concurrently;[39] and (2) whether they should use § 63.1209(q) to identify operations under the alternative Section 112 or 129 MACT standards as an alternative mode of operation.

A. Hazardous Waste Combustors Are Affected Sources Only Under Subpart EEE

Even though sources may invoke § 63.1206(b)(1)(ii) to become temporarily exempt from the substantive requirements of Subpart EEE, they remain an affected source under Subpart EEE, and only Subpart EEE (with respect to stack emissions requirements[40]), until the source meets

[34] US EPA, ''Final Technical Support Document for Hazardous Waste Combustor MACT Standards, Volume IV: Compliance with the Hazardous Waste Combustor Standard,'' July 1999, p. 4–6.

[35] Data submitted by Norris Johnson, Lone Star Industries, Inc., to Bob Holloway, US EPA, on November 16, 2000.

[36] See H.H. Nierman and A.M.Hood, ''How to Monitor Pulse Jet Baghouses,'' Chemical Engineering, March 1996, pp. 114–119

[37] If the Agency has not promulgated CAA Section 112 or 129 MACT standards for the non-hazardous waste burning class of sources in a particular source category, there are no ''otherwise applicable'' MACT standards for the source. For example, the Agency has not yet promulgated Section 129 standards for non-hazardous waste incinerators. In these cases, the source would not be subject to any MACT standards for stack emissions after the hazardous waste residence time has expired. The source must define such operations as a mode of operation under § 63.1209(q), and must note in the operating record when they begin this mode of operation.

[38] Note that, in a separate rulemaking, EPA would delete the requirement for the one-time notification.

[39] For example, the hazardous waste burning cement kiln MACT standards of Part 63, Subpart EEE and the Portland Cement manufacturing MACT standards of Part 63, Subpart LLL.

[40] Note, however, that sources may be an affected source under different MACT standards concurrently for control of HAPs from different sources at the facility. For example, all hazardous waste burning cement kilns are affected sources

Continued

the requirements specified in Table 1 to § 63.1200 for no longer being an affected source. Because those requirements include being in compliance with the RCRA closure requirements of Subpart G, Parts 264 or 265, they remain an affected source until it is determined they no longer burn hazardous waste.

To implement this clarification, we propose revising the rule to require that, if a source becomes temporarily exempt from the substantive requirements of Subpart EEE by halting hazardous waste burning activities, they must comply, during that temporary period, with all otherwise applicable Section 112 or 129 MACT standards. We use the term ''otherwise applicable'' because, after the hazardous waste residence time has expired, and if the source was not an affected source only under Subpart EEE, they would be subject to any and all Section 112 and 129 MACT standards we have promulgated for sources in the particular source category that do not burn hazardous waste (e.g., the MACT standards for Portland cement kilns in Part 63, Subpart LLL).

In addition, we propose revising the rule to clarify that otherwise applicable Section 112 and 129 MACT standards are applicable requirements under Subpart EEE, if the source elects to comply with those requirements after the hazardous waste residence time has expired. This term has significant implications in that applicable requirements are implemented and enforced under Subpart EEE as discussed below.

B. How Are Otherwise Applicable Requirements Implemented and Enforced Under Subpart EEE

Section 63.1209(q) requires establishment of operating requirements under different modes of operation. When electing to comply with the otherwise applicable MACT requirements (promulgated under Section 112 or 129 of the CAA) after the hazardous waste residence time has transpired, the source must use § 63.1209(q) to identify operating parameter limits that apply during that mode of operation. Section 63.1209(q) also requires documentation in the operating record when changing a mode of operation and beginning to comply with a different set of operating limits. In addition, that paragraph requires sources to begin calculating rolling averages anew (i.e., without considering previous recordings) when changing modes of operation.

Upon reevaluation of the requirement to begin calculating rolling averages anew when sources change modes of operation, we now believe that it would be more appropriate to use the most recent continuous monitoring system recordings when operating under a mode of operation to calculate rolling averages when renewing operations under that mode.[41] For example, if operating a hazardous waste burning cement kiln and electing to switch to the Part 63, Subpart LLL, requirements after the hazardous waste residence time has expired, the first rolling hourly average value for gas temperature at the inlet to the electrostatic precipitator would be calculated after the first minute of compliance with the Subpart LLL requirements based on the last 59 minutes of operations under the Subpart LLL requirements and the first minute of renewed operations under the Subpart LLL requirements. This would be the case regardless of how long ago the source last operated under the mode of operation in question.

In the Documentation of Compliance (DOC) under § 63.1211(d) and the Notification of Compliance (NOC) under § 63.1207(j) the source must specify the operating parameter limits that apply when operating under the mode of operation when complying with otherwise applicable requirements.[42] This requirement applies to all other modes of operation as well. For the mode of operation when complying with otherwise applicable requirements, however, the source must specify in the DOC and NOC any otherwise applicable Section 112 or 129 MACT standards and requirements that apply, including monitoring and compliance requirements and notification, reporting, and recordkeeping requirements. We limit this requirement to otherwise applicable Section 112 or 129 MACT standards because the source may be subject to other Clean Air Act standards while being an affected source under Subpart EEE, but it is not an affected source under any Section 112 or 129 MACT standards other than Subpart EEE. Thus, the source would not be subject to any otherwise applicable Section 112 or 129 MACT requirements that were not included in the DOC, NOC, and, ultimately, title V permit for that mode of operation.

C. Exemption From All Substantive Requirements of Subpart EEE During the Mode of Operation When Complying With Otherwise Applicable Section 112 or 129 MACT Standards

Section 63.1206(b)(1) exempts sources from the emission standards and operating requirements of Subpart EEE when operating under otherwise applicable Section 112 or 129 MACT standards after the hazardous waste residence time has expired. We propose to revise this requirement to exempt sources from all substantive Subpart EEE standards during this mode of operation such that the source would only be subject to the § 63.1209(q) provisions that it specifies for this mode of operation. This is appropriate because, as discussed above, sources must specify under § 63.1209(q) that, during this mode of operation, they will comply with all requirements of the otherwise applicable requirements of Section 112 or 129 MACT standards. Accordingly, we propose to exempt sources during this mode of operation from the emission standards of §§ 63.1203–63.1205; the monitoring and compliance standards of §§ 63.1206–63.1209, except the modes of operation requirements of § 63.1209(q); and the notification, reporting, and recordkeeping requirements of §§ 63.1210–63.1212.

XX. RCRA Permitting Requirements for Sources Entering the RCRA Process Post-Rule Promulgation

A. What Are We Proposing To Amend?

We are proposing to amend the language in 40 CFR 270.19, 270.22, 270.62, 270.66, 266.100, 265.340, and 264.340 regarding the applicability of those sections to hazardous waste burning incinerators, cement kilns and lightweight aggregate kilns. In particular, we want to clarify that any of these types of sources newly entering the RCRA permitting process or the hazardous waste burning universe after promulgation of the hazardous waste combustor MACT rule on September 30, 1999 are not subject to certain specified RCRA permit requirements, or to the RCRA combustor performance standards.

Since we are revisiting these sections to clarify their applicability, we are taking this opportunity to clarify a point about the Notification of Compliance, as referenced in these sections. Under § 63.1207(j), sources must postmark within 90 days of completing a comprehensive performance test an NOC documenting compliance or noncompliance with the emissions standards. We are clarifying that in

under Subpart EEE for stack emissions, and Subpart LLL for other sources of HAP emissions (e.g., clinker handling).

[41] Note, however, that may average operating parameter values continuously across various modes of operation provided that the averaging periods and limits for the parameter are the same under the various modes of operation.

[42] Furthermore, the title V permit must contain terms and conditions for all reasonably anticipated modes of operation (see 40 CFR 70.6(a)(9)).

order for the part 270 requirements to no longer apply, the NOC must document compliance.

1. How Had We Changed Part 270 in the HWC Rule?

In the final rule, we amended language in part 270 to accommodate the permit transition from RCRA to the CAA. In § 270.19, we added new paragraph (e) and in §§ 270.22, 270.62, and 270.66 we added similar language as introductory text (with slight variations in 270.22 and 270.66 to specify cement kilns and lightweight aggregate kilns). In brief, the amended language in these sections said that once a source demonstrates compliance with the standards in 40 CFR part 63 subpart EEE, the requirements in the specified part 270 sections would no longer apply. In order to retain a procedural framework for any risk burns [43] that might prove to be necessary under RCRA, we also included a provision allowing the Director to apply the provisions of those sections, on a case-by-case basis, for purposes of information collection in accordance with §§ 270.10(k) and 270.32(b)(2).

2. Why Do We Need To Revisit these Sections in Part 270?

As they were written for the final rule, these sections will continue to apply until a source demonstrates compliance with the standards in 40 CFR part 63 subpart EEE. This approach makes sense for sources who were currently in the RCRA permitting process at the time we published the final rule. Our primary concern at that time was on the transition from the RCRA process to the CAA. Since sources do not have to complete performance testing until May 2003, it is appropriate for sources already in the RCRA permitting process to continue the combustor portions of the process, including the trial burn requirements. We did not want the new rule to result in unnecessarily delayed testing, particularly if the testing is needed to ensure performance and to generate data for a risk assessment. In the preamble to the final rule, we discussed how sources already in the process of obtaining a RCRA permit could be transitioned to a title V permits (see 64 FR 52989, September 30, 1999). We identified some factors to be considered, as well as some examples to assist permit writers and facility owners or operators in developing a sound approach. We neglected to consider, however, what this approach would mean for new sources that did not exist at the time the final rule was promulgated.

Under RCRA, new sources must obtain a permit (or permit modification) before they may start construction of a new unit. Since new sources subject to the final rule will not be able to demonstrate compliance with the part 63 standards until after the units are built and they conduct performance testing, the part 270 language as currently promulgated would force them to complete the entire RCRA permitting process (including combustion portions) beforehand. For new facilities, this means they would have to submit a trial burn plan with their RCRA permit application and also submit suggested conditions for the various phases of operation—start-up/shake-down, trial burn, post-trial burn, and final operations. The permit writer would have to review this information and write conditions into the RCRA permit governing all phases of combustor operations.

It is our intent that new sources subject to the HWC final rule not follow the traditional RCRA combustion permitting process. Although new sources still must obtain a RCRA permit (or permit modification) prior to construction, our intent was that the permit instead focus on the other RCRA requirements applicable to all units (i.e., general facility standards, corrective action, financial responsibility, and closure), any non-emissions related combustor-specific concerns (i.e., materials handling), and requirements related to other RCRA units on site. In addition, if the alternative to the particulate matter standard revisions proposed today are promulgated, incinerators that comply with these alternative requirements would need to have the RCRA particulate matter performance standard and related operating conditions included in their RCRA permits. Also, if the permit writer determines that additional risk-based conditions for the combustion unit are necessary to supplement the MACT requirements, those conditions will be part of the RCRA permit.[44] We would not expect new sources to follow the RCRA requirements governing development and submittal of trial burn plans and setting of operating conditions for the various phases of operation, because these activities implement RCRA performance standards which are being replaced by the HWC NESHAP standards. We included requirements in the HWC NESHAP governing implementation of the MACT performance standards. For example, sources must submit performance test plans and must identify operating parameters that they anticipate will ensure compliance with the emission limits in their Documentation of Compliance. The CAA process, not RCRA, is the appropriate mechanism to ensure compliance with the MACT standards. Under the CAA permitting programs, these sources will be subject to New Source Review permits prior to construction as well as to title V operating permits which will incorporate the applicable requirements from the HWC NESHAP.[45]

3. What Are We Proposing To Amend in Parts 264, 265, 266?

In today's notice, we also propose to make conforming changes in parts 264, 265, and 266 for the above mentioned reasons. Specifically, we propose to revise 40 CFR 264.340(b), 265.340(b), and 266.100(b) to specify that hazardous waste burning incinerators, cement kilns, and lightweight aggregate kilns that are newly constructed, reconstructed, or modified such that they become affected sources following September 30, 1999 are not subject to the RCRA combustor treatment standards (except as noted) of parts 264, 265, and 266.

Part Three: Analytical and Regulatory Requirements

I. Executive Order 12866

Under Executive Order 12866, EPA must determine whether a regulatory action is significant and, therefore, subject to comprehensive review by the Office of Management and Budget (OMB), and the other provisions of the Executive Order. A significant

[43] A risk burn is any emissions testing performed for the purpose of collecting data for subsequent evaluation in a site-specific risk assessment. The testing may occur in conjunction with a RCRA trial burn or MACT performance test, or the risk burn may consist of a completely separate test effort.

[44] We expect that, in most cases, any additional risk-based conditions imposed under RCRA omnibus authority will reside in RCRA permits. However, a state regulatory agency may choose to incorporate those conditions into the title V permit as a matter of convenience or as part of developing a multi-media permit. In this situation, the conditions would still remain under RCRA authority and the permit would have to be signed by all appropriate officials (unless the state has omnibus-type authority in its air statute).

[45] Only those sources that meet the definition of a major source under the New Source Review permitting program are subject to federal New Source Review permits. The definition of ''major'' within the context of New Source Review permitting is different from that used when establishing MACT standards. Therefore, a new source subject to the Phase I MACT standards may not be required to obtain a federal New Source Review permit prior to construction. However, since all states have minor New Source Review permitting programs, it is likely that the source would still have to obtain a minor New Source Review permit.

regulatory action is defined by the Order as one that may:

—Have an annual effect on the economy of $100 million or more, or adversely affect in a material way the economy, a sector of the economy, productivity, competition, jobs, the environment, public health or safety, or State, local, or tribal governments or communities;

—Create a serious inconsistency or otherwise interfere with an action taken or planned by another agency;

—Materially alter the budgetary impact of entitlements, grants, user fees, or loan programs or rights and obligations or recipients thereof; or

—Raise novel legal or policy issues arising out of legal mandates, the President's priorities, or the principles set forth in Executive Order 12866.

Pursuant to the terms of Executive Order 12866, it has been determined that this rule is a ''significant regulatory action'' because it may be considered significant under point four above: ''Raise novel legal or policy issues arising out of legal mandates, the President's priorities, or the principles set forth in Executive Order 12866.'' As such, this action was submitted to OMB for review. Changes made in response to OMB suggestions or recommendations will be documented in the public record.

The aggregate annualized compliance costs for this rule, as proposed, are estimated to be less than $100 million. Furthermore, this proposed rule is not expected to adversely affect, in a material way, the economy, a sector of the economy, productivity, competition, jobs, the environment, public health or safety, or State, local, or tribal governments or communities. The benefits to human health and the environment resulting from today's proposed action have not been monetized but are deemed to be less than $100 million per year.

We have prepared two economic support documents for this proposed action. These are: Assessment of Potential Costs, Benefits and Other Impacts NESHAP: Standards for Hazardous Air Pollutants for Hazardous Waste Combustors—Technical Amendments (Assessment), and, Regulatory Flexibility Screening Analysis (RFSA) For NESHAP: Standards for Hazardous Air Pollutants for Hazardous Waste Combustors—Technical Amendments. The Assessment addresses economic impacts of the twenty proposed amendments to the Phase I MACT final rule. The Assessment also briefly examines equity considerations and other impacts. The Regulatory Flexibility Screening Analysis (RFSA) briefly examines small entity impacts potentially resulting from this proposed action. This Part presents a summary of findings from the Assessment and the RFSA documents. The complete Assessment and RFSA documents are available in the RCRA docket established for this action. Interested readers are encouraged to read and comment on these documents.

A. Why Is This Proposed Rule Necessary?

The environmental regulations promulgated by EPA seek to correct market failures through the internalization of negative environmental externalities. That is not the case with today's proposed rule. This action is necessary in order to clarify and improve compliance, testing, and monitoring requirements associated with the final rule NESHAP: Final Standards for Hazardous Air Pollutants for Hazardous Waste Combustors. See 64 FR 52828.

B. Were Non-Regulatory Alternatives First Considered?

Section 1(b)(3) of Executive Order 12866 instructs Executive Branch Agencies to consider and assess available alternatives to direct regulation prior to making a determination for regulation. This regulatory determination assessment should be considered, ''to the extent permitted by law, and where applicable.'' The ultimate purpose of the regulatory determination assessment is to ensure that the most efficient tool, regulation, or other type of action is applied in meeting the targeted statutory objective(s).

We have already employed education and outreach programs designed to accomplish the objectives of the amendments proposed in this rule. We believe that technical clarification and improved implementation efficiency will be best accomplished through a regulatory approach in order to fully accomplish our objectives.

C. What Regulatory Options Were Considered?

For this action we considered the proposed regulatory approach for all the technical amendments as a group, or in some cases, for an amendment that was presented for comment only. We also considered the ''no action'' option, which would result in zero cost impacts beyond the baseline established in the final rule.

D. What Are the Potential Costs or Cost Savings of This Proposed Rule?

The twenty proposed amendments presented in today's action vary considerably in scope and substance. Nearly all of the amendments, however, are anticipated to result in minor to negligible incremental cost impacts (savings or increases) to both the regulated community and the Agency. Two or three of the amendments may result in more substantive cost impacts. These findings are briefly summarized below. The complete Assessment document presents a detailed review of our methodology, data, findings, and analytical limitations.

Cost Savings:

The amendments resulting in projected minor cost savings to the regulated community are generally associated with the increased compliance and administrative flexibility, technical clarifications, time extensions, and reduced monitoring/testing requirements. One amendment, however, may result in significant net incremental cost savings to the regulated community. Amendment number X (Method 23 as an Alternative to Method 0023A for Dioxin/Furans), is designed to provide flexibility in selection of test methods for dioxins and furans. To test for dioxins and furans under the CAA, Appendix A of 40 CFR Part 60 prescribes Method 23. This method combines the front half of the filter and probe rinse with the back half of the sorbent and rinses to perform a single extraction and analysis. Recovery of spiked standards into the sorbent are used to serve as an indicator of overall recovery.

Method 0023A is the RCRA dioxins/furans air emission test method found in SW–846 (incorporated within SW–846 in June, 1997). The updated Method 0023A differs from Method 23 primarily in that the former uses the addition of spike standards to both the filter (front half) and sorbent (back half), and then separates the front half and back half for analysis in order to determine the recovery from each half. While more expensive, this process helps to quantify recoveries more accurately for both the back half and front half fractions.

The final rule requires sources to use Method 0023A. At that time we believed the improvements method 0023A offered over Method 23 warranted a requirement that all sources use the new method. By incorporating separate recovery, spiking, and analysis of front half and back half samples the new method helps better quantify recoveries for both the back half and front half fractions thereby improving quality

assurance. The benefits of Method 0023A compared to Method 23 thus include more accurate recovery data and improved data quality. The downside to Method 0023A is its higher analytical cost and, possibly higher detection limits. Furthermore, we have not documented the potential magnitude of the incremental benefits of Method 0023A.

We estimate that potentially significant cost savings may result from the reduced analytical expenses of using Method 23 as an alternative to Method 23A for dioxin/furans. The difference in unit cost between the methods is approximately $3,000 per source. Industry estimates indicate that about half of all facilities are likely to make use of this alternative. However, this test is only required to be performed every two and a half years. Based on these factors, we estimate total cost savings to the regulated community at about $102,600 per year.

Cost Increases:

There may be cost increases associated with some of the proposed amendments. Many of the amendments associated with potential cost increases, however, propose alternatives that a source may voluntarily choose to apply. Cost increases would occur to both the regulated community and the regulatory agency and/or states. Most of these cost increases are expected to be minor, resulting from development and submission of alternative plans and/or test data. There may also be some minor additional cost burdens associated with potential increases in violations.

We estimate that five of the proposed amendments may result in measurable incremental cost burdens to industry and the regulatory agency. These amendments are projected to result in aggregate cost increases to industry of $199,300 per year. The government cost increase is estimated at $161,800 per year. Amendment V (Operator Training and Certification) is the single largest cost contributor to the cost increase for both industry and government. This amendment is projected to result in an aggregate incremental cost increase of nearly $154,000 to industry and $150,700 to the regulatory agency.

We estimate a net cost increase of $258,500 per year from all proposed amendments for which we were able to developed quantified cost impact estimates. This cost impact estimate will marginally increase the total annual social cost projection of $50 to $63 million [46] estimated for compliance with the final rule. We believe that our net cost impact (increase) estimate of $258,500 may be high because it was not feasible to quantify some of the potential cost savings that are likely to result from many of the proposed amendments. All cost impacts are dependant upon the regional enforcement regime.

II. Regulatory Flexibility Act (RFA), as amended by the Small Business Regualtory Enforcement Fairness Act of 1996 (SBREFA), 5 USC 601 et. seq.

The RFA generally requires an agency to prepare a regulatory flexibility analysis of any rule subject to notice and comment rulemaking requirements under the Administrative Procedure Act or any other statute, unless the agency certifies that the rule will not have a significant economic impact on a substantial number of small entities. Small entities include small businesses, small organizations, and small governmental jurisdictions.

For purposes of assessing the impacts of today's proposed rule on small entities, a small entity is defined as: (1) A small business that has fewer than 750, or 500 employees per firm depending upon the SIC code the firm is primarily classified in; (2) a small governmental jurisdiction that is a government of a city, county, town, school district or special district with a population of less than 50,000; or (3) a small organization that is any not-for-profit enterprise which is independently owned and operated and is not dominant in its field.

After considering the economic impacts of today's proposed rule on small entities, I certify that this action will not have a significant economic impact on a substantial number of small entities. We have determined that only amendment X (Method 23 as an Alternative to Method 0023A for Dioxin/Furans) is likely to impact one or more of the six small hazardous waste combustors. Under our assumed worst-case scenario where the maximum cost impacts of this amendment ($102,600 savings) are attributed to only these six small sources, we find that no source would experience impacts beyond 0.48 percent of annual gross revenues [47]. This does not represent a significant economic impact.

Although this proposed rule will not have a significant economic impact on a substantial number of small entities, we nonetheless tried to reduce the impact of this rule on small entities. Although not specifically directed toward small business outreach, we have met with industry representatives during the developmental phase and requested comment and suggestions on all aspects of this proposed rulemaking. No small business concerns were brought up by these industry representatives. We continue to be interested in the potential impacts of the proposed rule on small entities and welcome comments on issues related to such impacts.

We have completed the analysis: Regulatory Flexibility Screening Analysis (RFSA) For NESHAP: Standards for Hazardous Air Pollutants for Hazardous Waste Combustors—Technical Amendments, in support of the proposed rule. This RFSA document is available for review in the docket established for today's action.

III. Executive Order 13045: "Protection of Children From Environmental Health Risks and Safety Risks"

"Protection of Children from Environmental Health Risks and Safety Risks" (62 FR 19885, April 23, 1997) applies to any rule that: (1) Is determined to be "economically significant" as defined under Executive Order 12866, and (2) concerns an environmental health or safety risk that EPA has reason to believe may have a disproportionate effect on children. If the regulatory action meets both criteria, the Agency must evaluate the environmental health or safety effects of the planned rule on children, and explain why the planned regulation is preferable to other potentially effective and reasonably feasible alternatives considered by the Agency. This proposed rule is not subject to the Executive Order because it is not economically significant as defined in Executive Order 12866. Furthermore, we do not have reason to believe that environmental health or safety risks addressed by this action present a disproportionate risk to children.

In addition, these amendments, as part of the HWC MACT standards, are exempt from the requirements of Executive Order 13045 because the rule is a technology-based regulation rather than a risk-based one. Nevertheless, the proposed amendments would not result in any incremental environmental harm that would affect children's health.

[46] U.S. Environmental Protection Agency, Office of Solid Waste, Addendum to the Assessment of the Potential Costs, Benefits, and Other Impacts of the Hazardous Waste Combustion MACT Standards: Final Rule, July 23, 1999.

[47] Based on July 1999 Assessment, we found that the smallest annual firm revenue associated with the six small facilities were $3.6 million. Dividing $102,600 by the six facilities results in $17,100 maximum impact per small facility. ($17,100/$3.6 million = 0.48 percent).

IV. Environmental Justice Executive Order 12898

Executive Order 12898, ''Federal Actions to Address Environmental Justice in Minority Populations and Low-Income Population'' (February 11, 1994), is designed to address the environmental and human health conditions of minority and low-income populations. EPA is committed to addressing environmental justice concerns and has assumed a leadership role in environmental justice initiatives to enhance environmental quality for all citizens of the United States. The Agency's goals are to ensure that no segment of the population, regardless of race, color, national origin, income, or net worth bears disproportionately high and adverse human health and environmental impacts as a result of EPA's policies, programs, and activities. In response to Executive Order 12898, and to concerns voiced by many groups outside the Agency, EPA's Office of Solid Waste and Emergency Response (OSWER) formed an Environmental Justice Task Force to analyze the array of environmental justice issues specific to waste programs and to develop an overall strategy to identify and address these issues (OSWER Directive No. 9200.3–17).

We have no data indicating that today's proposal would result in disproportionately negative impacts on minority or low income communities. The public is invited to comment and submit data related to environmental justice issues potentially associated with today's proposal.

V. Unfunded Mandates Reform Act

Title II of the Unfunded Mandates Reform Act of 1995 (UMRA), Public Law 104–4, establishes requirements for Federal agencies to assess the effects of their regulatory actions on State, local, and tribal governments and the private sector. Under section 202 of the UMRA, EPA generally must prepare a written statement, including a cost-benefit analysis, for proposed and final rules with ''Federal mandates'' that may result in expenditures to State, local, and tribal governments, in the aggregate, or to the private sector, of $100 million or more in any single year. Before promulgating an EPA rule for which a written statement is needed, section 205 of the UMRA generally requires EPA to identify and consider a reasonable number of regulatory alternatives and adopt the least costly, most cost-effective or least burdensome alternative that achieves the objectives of the rule. The provisions of section 205 do not apply when they are inconsistent with applicable law. Moreover, section 205 allows EPA to adopt an alternative other than the least costly, most cost-effective or least burdensome alternative if the Administrator publishes with the final rule an explanation why that alternative was not adopted. Before EPA establishes any regulatory requirements that may significantly or uniquely affect small governments, including tribal governments, it must have developed under section 203 of the UMRA a small government agency plan. The plan must provide for notifying potentially affected small governments, enabling officials of affected small governments to have meaningful and timely input in the development of EPA regulatory proposals with significant Federal intergovernmental mandates, and informing, educating, and advising small governments on compliance with the regulatory requirements.

We have determined that this rule does not contain a Federal mandate that may result in expenditures of $100 million or more for State, local, and tribal governments, in the aggregate, or the private sector in any single year. The amendments, as proposed, may result in increased costs to all states (or the Agency) of no more than approximately $160,000 per year. Thus, today's rule is not subject to the requirements of sections 202 and 205 of the UMRA.

VI. Executive Order 13132 (Federalism)

Executive Order 13132, entitled ''Federalism'' (64 FR 43255, August 10, 1999), requires EPA to develop an accountable process to ensure ''meaningful and timely input by State and local officials in the development of regulatory policies that have federalism implications.'' ''Policies that have federalism implications'' are defined in the Executive Order to include regulations that have ''substantial direct effects on the States, on the relationship between the national government and the States, or on the distribution of power and responsibilities among the various levels of government.''

This proposed rule does not have federalism implications. It will not have substantial direct effects on the States, on the relationship between the national government and the States, or on the distribution of power and responsibilities among the various levels of government, as specified in Executive Order 13132. This rule, as proposed, is projected to result in economic impacts to privately owned hazardous waste combustion facilities. Marginal administrative burden impacts may occur to selected States an/or EPA Regional Offices if these entities experience increased administrative needs, enforcement requirements, or information requests. However, this rule, as proposed, will not have substantial direct effects on the States, intergovernmental relationships, or the distribution of power and responsibilities. Thus, Executive Order 13132 does not apply to this rule.

In the spirit of Executive Order 13132, and consistent with EPA policy to promote communications between EPA and State and local governments, we specifically solicit comment on this proposed rule from State and local officials.

VII. Consultation With Tribal Governments

Executive Order 13175, entitled ''Consultation and Coordination with Indian Tribal Governments'' (65 FR 67249, November 6, 2000), requires EPA to develop an accountable process to ensure ''meaningful and timely input by tribal officials in the development of regulatory policies that have tribal implications.'' ''Policies that have tribal implications'' is defined in the Executive Order to include regulations that have ''substantial direct effects on one or more Indian tribes, on the relationship between the Federal government and the Indian tribes, or on the distribution of power and responsibilities between the Federal government and Indian tribes.''

This proposed rule does not have tribal implications. It will not have substantial direct effects on tribal governments, on the relationship between the Federal government and Indian tribes, or on the distribution of power and responsibilities between the Federal government and Indian tribes, as specified in Executive Order 13175. Today's proposal would not significantly or uniquely affect the communities of Indian tribal governments, nor would it impose substantial direct compliance costs on them. Tribal communities are not known to own or operate any hazardous waste combustion facilities, nor are these communities disproportionately located adjacent to or near such facilities. Finally, tribal governments will not be required to assume any administrative or permitting responsibilities associated with this proposed rule.

In the spirit of Executive Order 13175, and consistent with EPA policy to promote communications between EPA and tribal governments, we specifically request comment on this proposed rule from tribal officials.

VIII. Paperwork Reduction Act

We have prepared an Information Collection Request (ICR) document (ICR No. 1773.03) listing the information collection requirements of this proposed rule, and have submitted it for approval to the Office of Management and Budget (OMB) under the provisions of the Paperwork Reduction Act, 44 U.S.C. 3501 *et seq.* OMB has assigned a control number 2050–0171 for this ICR. A copy of this ICR may be obtained from Sandy Farmer, OPIA Regulatory Information Division, U.S. Environment Protection Agency (2137), 1200 Pennsylvania Avenue NW, Washington, DC 20460, or by calling (202) 260–2740.

Some of the amendments proposed today pertain to RCRA provisions of the rule (i.e. to 40 CFR parts 260 thru 271), and were covered under an earlier ICR No. 1361.08. Today's amendments to these RCRA provisions are all de-regulatory, and do not impose any burden on the regulated community. They only reduce the existing burden shown in that ICR. The ICR No. 1361.08 will be revised to show the reduced burden when the final rule is promulgated. The public burden associated with other provisions of this proposed rule (which are under the Clean Air Act) is projected to affect approximately 171 HWC units and is estimated to average 8.7 hours per respondent annually. The reporting and recordkeeping cost burden is estimated to average $511 per respondent annually. Burden means total time, effort, or financial resources expended by persons to generate, maintain, retain, disclose, or provide information to or for a Federal agency. That includes the time needed to review instructions; develop, acquire, install, and utilize technology and systems for the purposes of collecting, validating, and verifying information, processing and maintaining information, and disclosing and providing information; adjust the existing ways to comply with any previously applicable instructions and requirements; train personnel to be able to respond to a collection of information; search data sources; complete and review the collection of information; and transmit or otherwise disclose the information.

Comments are requested on the need of this information, accuracy of the provided burden estimates, and any suggested methods for minimizing the respondent burden. Send comments to Sandy Farmer at the address given above, and to the Office of Information and Regulatory Affairs, Office of Management and Budget, 725 17th St. NW, Washington, DC 20503, marked ''Attention: Desk Officer for EPA.'' The final rule will respond to all OMB and public comments on the information collection requirements contained in this proposal.

We note that the recordkeeping and reporting requirements are specifically authorized by section 114 of the CAA (42 U.S.C. 7414). All information submitted to the EPA for which a claim of confidentiality is made will be safeguarded according to EPA policies in 40 CFR part 2, subpart B, Confidentiality of Business Information.

An agency may not conduct or sponsor, and a person is not required to respond to, a collection of information unless it displays a currently valid OMB control number. The OMB control numbers for EPA's regulations are listed in 40 CFR part 9 and 48 CFR chapter 15. The EPA will amend the table in 40 CFR part 9 of currently approved information collection request (ICR) control numbers issued by OMB upon finalization of this rule and list the information collection requirements contained in the final rule.

IX. National Technology Transfer and Advancement Act of 1995

Section 12(d) of the National Technology Transfer and Advancement Act of 1995 (''NTTAA''), Public Law 104–113, section 12(d) (15 U.S.C. 272 note) directs EPA to use voluntary consensus standards in its regulatory activities unless to do so would be inconsistent with applicable law or otherwise impractical. Voluntary consensus standards are technical standards (e.g., materials specifications, test methods, sampling procedures, and business practices) that are developed or adopted by voluntary consensus standards bodies. The NTTAA directs EPA to provide Congress, through OMB, explanations when the Agency decides not to use available and applicable voluntary consensus standards.

This proposed rulemaking does not involve technical standards. Therefore, we are not considering the use of any voluntary consensus standards. We welcome comments on this aspect of the proposed rulemaking and, specifically, invite the public to identify potentially applicable voluntary consensus standards and to explain why such standards should be used in this regulation.

Part Four: State Authority

States can implement and enforce the new MACT standards through their delegated 112(l) CAA program and/or by having title V authority. A State's title V authority is independent of whether it has been delegated section 112(l) of the CAA. Additional information on state authority under the CAA may be found in the HWC MACT rule (64 FR at 52991).

List of Subjects

40 CFR Part 63

Environmental protection, Air pollution control, Hazardous substances, Reporting and recordkeeping requirements.

40 CFR Part 264

Environmental protection, Air pollution control, Hazardous waste, Insurance, Packaging and containers, Reporting and recordkeeping requirements, Security measures, Surety bonds

40 CFR Part 265

Environmental protection, Air pollution control, Hazardous waste, Insurance, Packaging and containers, Reporting and recordkeeping requirements, Security measures, Surety bonds, Water supply.

40 CFR Part 266

Environmental protection, Energy, Hazardous waste, Recycling, Reporting and recordkeeping requirements

40 CFR Part 270

Environmental protection, Administrative practice and procedure, Confidential business information, Hazardous materials transportation, Hazardous waste, Reporting and recordkeeping requirements, Water pollution control, Water supply.

Dated: June 18, 2001.

Christine Todd Whitman,

Administrator.

For the reasons set out in the preamble, it is proposed that title 40 of the Code of Federal Regulations is amended as follows:

PART 63—NATIONAL EMISSIONS STANDARDS FOR HAZARDOUS AIR POLLUTANTS FOR SOURCE CATEGORIES

1. The authority citation for part 63 continues to read as follows:

Authority: 42 U.S.C. 7401 *et seq.*

2. Section 63.14 is amended by adding paragraph (i) to read as follows:

§ 63.14 Incorporations by reference.

* * * * *

(i) *ASME standard.* This standard is available from the American Society of Mechanical Engineers, 345 East 47th Street, New York, N.Y. 10017: Standard for the Qualification and Certification of Hazardous Waste Incinerator Operators, ASME QHO–1–1994.

3. Section 63.1201 is amended by revising the definition of ''Instantaneous monitoring'' in paragraph (a) to read as follows:

§ 63.1201 Definitions and acronyms used in this subpart.

(a) * * *

Instantaneous monitoring for combustion system leak control means detecting and recording pressure, without use of an averaging period, at a frequency adequate to detect combustion system leak events from hazardous waste combustion.

* * * * *

4. Section 63.1206 is amended by revising paragraph (c)(5)(ii) and (c)(6) to read as follows:

§ 63.1206 When and how must you comply with the standards and operating requirements?

* * * * *

(c) * * *

(5) * * *

(ii) You must specify in the performance test workplan and Notification of Compliance the method that will be used to control combustion system leaks. If you control combustion system leaks by maintaining the combustion zone pressure lower than ambient pressure using an instantaneous monitor, you must also specify in the performance test workplan and Notification of Compliance the monitoring and recording frequency of the pressure monitor, and specify how the monitoring approach will be integrated into the automatic waste feed cutoff system.

(6) *Operator training and certification.* (i) You must establish training programs for all categories of personnel whose activities may reasonably be expected to directly affect emissions of hazardous air pollutants from the source. Such persons include, but are not limited to, chief facility operators, control room operators, continuous monitoring system operators, persons that sample and analyze feedstreams, persons that manage and charge feedstreams to the combustor, persons that operate emission control devices, and ash and waste handlers. Each training program shall be of a technical level commensurate with the person's job duties specified in the training manual. Each commensurate training program shall require an examination to be administered by the instructor at the end of the training course. Passing of this test shall be deemed the ''certification'' for personnel, except that, for control room operators, the training and certification program shall be as specified in paragraphs (c)(6)(iii) through (c)(6)(vi) of this section.

(ii) You must ensure that the source is operated and maintained at all times by persons who are trained and certified to perform these and any other duties that may affect emissions of hazardous air pollutants. A certified control room operator must be on duty at the site at all times the source is in operation.

(iii) Hazardous waste incinerator control room operators must:

(A) Be trained and certified under a site-specific, source-developed and implemented program that meets the requirements of paragraph (c)(6)(v) of this section; or

(B) Be trained under the requirements of, and certified under, the American Society of Mechanical Engineers Standard Number QHO–1–1994 (incorporated by reference—see § 63.14(e)). If you choose to use the ASME program:

(*1*) Control room operators must, prior to the compliance date, achieve provisional certification, and must submit an application to ASME and be scheduled for the full certification exam. Within one year of the compliance date, control room operators must achieve full certification;

(*2*) New operators and operators of new sources must, before assuming their duties, achieve provisional certification, and must submit an application to ASME, and be scheduled for the full certification exam. Within one year of assuming their duties, these operators must achieve full certification; or

(C) Be trained and certified under a State program.

(iv) Cement kiln and lightweight aggregate kiln control room operators must be trained and certified under:

(A) A site-specific, source-developed and implemented program that meets the requirements of paragraph (c)(6)(v) of this section; or

(B) A State program.

(v) Site-specific, source developed and implemented training programs for control room operators must include the following elements:

(A) Training on the following subjects:

(*1*) Environmental concerns, including types of emissions;

(*2*) Basic combustion principles, including products of combustion;

(*3*) Operation of the specific type of combustor used by the operator, including proper startup, waste firing, and shutdown procedures;

(*4*) Combustion controls and continuous monitoring systems;

(*5*) Operation of air pollution control equipment and factors affecting performance;

(*6*) Inspection and maintenance of the combustor, continuous monitoring systems, and air pollution control devices;

(*7*) Actions to correct malfunctions or conditions that may lead to malfunction;

(*8*) Residue characteristics and handling procedures; and

(*9*) Applicable Federal, state, and local regulations, including Occupational Safety and Health Administration workplace standards; and

(B) An examination designed and administered by the instructor; and

(C) Written material covering the training course topics that may serve as reference material following completion of the course.

(vi) To maintain control room operator qualification under a site-specific, source developed and implemented training program as provided by paragraph (c)(6)(v) of this section, control room operators must complete an annual review or refresher course covering, at a minimum, the following topics:

(A) Update of regulations;

(B) Combustor operation, including startup and shutdown procedures, waste firing, and residue handling;

(C) Inspection and maintenance;

(D) Responses to malfunctions or conditions that may lead to malfunction; and

(E) Operating problems encountered by the operator.

(vii) You must record the operator training and certification program in the operating record.

* * * * *

5. Section 63.1207 is amended by:

a. Revising paragraphs (g)(2)(i) and (g)(2)(ii).

b. Revising paragraph (h)(2) introductory text.

c. Revising paragraph (j)(1)(i).

d. Adding paragraph (e)(3).

e. Adding paragraph (g)(2)(iv).

f. Adding paragraph (j)(5).

The revisions and additions read as follows:

§ 63.1207 What are the performance testing requirements?

* * * * *

(e) * * *

(3) *Petitions for time extension if Administrator fails to approve or deny test plans.* You may petition the Administrator under § 63.7(h) to obtain a ''waiver'' of any performance test—initial or periodic performance test; comprehensive or confirmatory test. The ''waiver'' would be implemented as an extension of time to conduct the performance test at a later date.

(i) *Qualifications for the waiver.* (A) You may not petition the Administrator for a waiver under this section if the Administrator has issued a notification of intent to deny your test plan(s) under § 63.7(c)(3)(i)(B).

(B) You must submit a site-specific emissions testing plan and a continuous monitoring system performance evaluation plan at least one year before a comprehensive performance test is scheduled to begin as required by paragraph (c)(1) of this section, or at least 60 days before a confirmatory performance test is scheduled to begin as required by paragraph (d) of this section. The test plans must include all documentation required to be included, including the substantive content requirements of paragraph (f) of this section and § 63.8(e); and

(C) You must make a good faith effort to accommodate the Administrator's comments on the test plans.

(ii) *Procedures for obtaining a waiver and duration of the waiver:* (A) You must submit to the Administrator a waiver petition or request to renew the petition under § 63.7(h) separately for each source at least 60 days prior to the scheduled date of the performance test.

(B) The Administrator will approve or deny the petition within 30 days of receipt and notify you promptly of the decision.

(C) The Administrator will not approve an individual waiver petition for a duration exceeding 6 months;

(D) The Administrator will include a sunset provision in the waiver ending the waiver within 6 months;

(E) You may submit a revised petition to renew the waiver under § 63.7(h)(3)(iii) at least 60 days prior to the end date of the most recently approved waiver petition;

(F) The Administrator may approve a revised petition for a total waiver period up to 12 months.

(iii) *Content of the waiver.* (A) You must provide documentation to enable the Administrator to determine that the source is meeting the relevant standard(s) on a continuous basis as required by § 63.7(h)(2). For extension requests for the initial comprehensive performance test, you must submit your Documentation of Compliance to assist the Administrator in making this determination.

(B) You must include in the petition information justifying your request for a waiver, such as the technical or economic infeasibility, or the impracticality, of the affected source performing the required test, as required by § 63.7(h)(3)(iii).

(iv) *Public notice.* You must notify the public (e.g., distribute public mailing list) of your petition to waive a performance test.

* * * * *

(g) * * *

(2) * * *

(i) Carbon monoxide (or hydrocarbon) CEMS emissions levels must be within the range of the average value to the maximum value allowed, except as provided by paragraph (g)(2)(iv) of this section. The average value is defined as the sum of the hourly rolling average values recorded (each minute) over the previous 12 months divided by the number of rolling averages recorded during that time;

(ii) Each operating limit (specified in § 63.1209) established to maintain compliance with the dioxin/furan emission standard must be held within the range of the average value over the previous 12 months and the maximum or minimum, as appropriate, that is allowed, except as provided by paragraph (g)(2)(iv) of this section. The average value is defined as the sum of the rolling average values recorded over the previous 12 months divided by the number of rolling averages recorded during that time. The average value must not include calibration data, malfunction data, and data obtained when not burning hazardous waste;

* * * * *

(iv) The Administrator may approve an alternative range to that required by paragraphs (g)(2)(i) and (ii) of this section if you document in the confirmatory performance test plan that it may be problematic to maintain the required range during the test. In addition, when making the finding of compliance, the Administrator may consider test conditions outside of the range specified in the test plan based on a finding that you could not reasonably maintain the range specified in the test plan and considering factors including whether the time duration and level of the parameter when operations were out of the specified range were such that operations during the confirmatory test are determined to be reasonably representative of normal operations. In addition, the Administrator will consider the proximity of the emission test results to the standard.

* * * * *

(h) * * *

(2) Current operating parameters limits are also waived during pretesting prior to comprehensive performance testing for an aggregate time not to exceed 720 hours of operation under an approved test plan or if the source records the results of the pretesting. Pretesting means:

* * * * *

(j) * * *

(1) * * *

(i) Except as provided by paragraphs (j)(4) and (j)(5) of this section, within 90 days of completion of a comprehensive performance test, you must postmark a Notification of Compliance documenting compliance or noncompliance with the emission standards and continuous monitoring system requirements, and identifying operating parameter limits under § 63.1209.

* * * * *

(5) *Early compliance.* If you conduct the initial comprehensive performance test prior to September 30, 2002 (or a later compliance date approved under § 63.6(i)), you need not postmark the Notification of Compliance within 90 days of completion of the performance test.

* * * * *

6. Section 63.1209 is amended by:

a. Revising paragraphs (k)(5) and (k)(7)(i)(C).

b. Revising paragraphs (l)(3) and (l)(4).

c. Revising paragraph (p).

d. Revising paragraph (q).

e. Adding paragraph (k)(6)(iv).

These revisions and additions read as follows:

§ 63.1209 What are the monitoring requirements?

* * * * *

(k) * * *

(5) *Particulate matter operating limit.* If your combustor is equipped with an activated carbon injection system, you must establish operating parameter limits on the particulate matter control device as specified by paragraph (m)(1) of this section;

(6) * * *

(iv) Control device operating parameter limits (OPLs). You must establish operating parameter limits on the particulate matter control device as specified by paragraph (m)(1) of this section.

(7) * * *

(i) * * *

(C) For the initial comprehensive performance test, you may base the initial limit on maximum bed age of the carbon in each segment of the bed on manufacturer's specifications. If you use manufacturer's specifications rather than actual bed age to establish the initial limit, you must also conduct a bed life confirmatory test prior to the manufacturer's specification of bed age. That bed life confirmatory test must be conducted under the procedures required for a dioxin/furan confirmatory test as specified by § 63.1207(g)(2). The purpose of the bed life confirmatory test is to document to the Administrator that

the initial limit on maximum bed age ensures compliance with the dioxin/furan emission standard. If you fail to confirm compliance with the dioxin/furan emission standard during this testing, you must conduct additional testing as necessary to document that a revised lower limit on maximum bed age ensures compliance with the dioxin/furan standard.

* * * * *

(l) * * *

(3) *Activated carbon injection.* If your combustor is equipped with an activated carbon injection system, you must establish operating parameter limits prescribed by paragraphs (k)(5) and (k)(6) of this section.

(4) *Activated carbon bed.* If your combustor is equipped with a carbon bed system, you must establish operating parameter limits prescribed by paragraph (k)(7) of this section. In addition, if you elect to establish the initial limit on carbon bed age based on the manufacturer's specification, you must:

(i) Operate the combustor during the bed life confirmatory test required by paragraph (k)(7)(i)(C) of this section such that each operating limit specified in paragraph (l) of this section is held within the range of the average value over the previous 12 months and the maximum or minimum, as appropriate, that is allowed. The term ''average value'' is defined in § 63.1207(g)(2)(ii); and

(ii) Conduct mercury emissions testing to document compliance with the mercury emission standard. If you fail to confirm compliance with the mercury emission standard during this testing, you must conduct additional testing as necessary to document that a revised lower limit on maximum bed age ensures compliance with the standard.

* * * * *

(p) *Maximum combustion chamber pressure.* If you comply with the requirements for combustion system leaks under § 63.1206(c)(5) by maintaining the maximum combustion chamber zone pressure lower than ambient pressure to prevent combustion system leaks from hazardous waste combustion, you must perform instantaneous monitoring of pressure and the automatic waste feed cutoff system must be engaged when negative pressure is not adequately maintained.

(q) *Operating under different modes of operation.* If you operate under different modes of operation, you must establish operating parameter limits for each mode. You must document in the operating record when you change a mode of operation and begin complying with the operating limits for an alternative mode of operation.

(1) *Operating under otherwise applicable standards after the hazardous waste residence time has transpired.* As provided by § 63.1206(b)(1)(ii), you may operate under otherwise applicable requirements promulgated under sections 112 and 129 of the Clean Air Act in lieu of the substantive requirements of this subpart.

(i) The otherwise applicable requirements promulgated under sections 112 and 129 of the Clean Air Act are applicable requirements under this subpart.

(ii) You must specify (e.g., by reference) the otherwise applicable requirements as a mode of operation in your Documentation of Compliance under § 63.1211(d), your Notification of Compliance under § 63.1207(j), and your title V permit application. These requirements include the otherwise applicable requirements governing emission standards, monitoring and compliance, and notification, reporting, and recordkeeping.

(2) *Calculating rolling averages under different modes of operation.* When you transition to a different mode of operation, you must calculate rolling averages anew using the continuous monitoring system values previously recorded for that mode of operation (i.e., you ignore continuous monitoring system values recorded under other modes of operations when you transition back to a mode of operation).

PART 264—STANDARDS FOR OWNERS AND OPERATORS OF HAZARDOUS WASTE TREATMENT, STORAGE, AND DISPOSAL FACILITIES

7. The authority citation for part 264 continues to read as follows:

Authority: 42 U.S.C. 6905, 6912(a), 6924, and 6925.

8. Section 264.340 is amended by redesignating paragraph (b)(2) as paragraph (b)(3); revising the first sentence in paragraph (b)(1); and adding new paragraph (b)(2) to read as follows:

§ 264.340 Applicability.

* * * * *

(b) * * *

(1) Except as provided by paragraph (b)(3) of this section, the standards of this part no longer apply when an owner or operator demonstrates compliance with the maximum achievable control technology (MACT) requirements of part 63, subpart EEE of this chapter by conducting a comprehensive performance test and submitting to the Administrator a Notification of Compliance under §§ 63.1207(j) and 63.1210(d) of this chapter documenting compliance with the requirements of part 63, subpart EEE of this chapter. * * *

(2) Except as provided by paragraph (b)(3) of this section, the standards of this section do not apply to an owner or operator of a hazardous waste incinerator (as defined at § 63.1201 of this chapter) that begins construction, reconstruction, or becomes an affected source of part 63, subpart EEE of this chapter, after September 30, 1999.

* * * * *

PART 265—INTERIM STATUS STANDARDS FOR OWNERS AND OPERATORS OF HAZARDOUS WASTE TREATMENT, STORAGE, AND DISPOSAL FACILITIES

9. The authority citation for part 265 continues to read as follows:

Authority: 42 U.S.C. 6905, 6906, 6912, 6922, 6923, 6924, 6925, 6935, 6936, and 6937.

10. Section 265.340 is amended by redesignating paragraph (b)(2) as paragraph (b)(3); revising the first sentence in paragraph (b)(1); and adding a new paragraph (b)(2) to read as follows:

§ 265.340 Applicability.

* * * * *

(b) * * *

(1) Except as provided by paragraph (b)(3) of this section, the standards of this part no longer apply when an owner or operator demonstrates compliance with the maximum achievable control technology (MACT) requirements of part 63, subpart EEE of this chapter by conducting a comprehensive performance test and submitting to the Administrator a Notification of Compliance under §§ 63.1207(j) and 63.1210(d) of this chapter documenting compliance with the requirements of part 63, subpart EEE of this chapter. * * *

(2) Except as provided by paragraph (b)(3) of this section, the standards of this section do not apply to an owner or operator begins construction, reconstruction, or becomes an affected source of part 63, subpart EEE of this chapter, after September 30, 1999.

* * * * *

PART 266—STANDARDS FOR THE MANAGEMENT OF SPECIFIC HAZARDOUS WASTES AND SPECIFIC TYPES OF HAZARDOUS WASTE MANAGEMENT FACILITIES

11. The authority citation for part 266 continues to read as follows:

Authority: Secs. 1006, 2002(a), 3004, 6905, 6906, 6912, 6922, 6925, and 6937.

12. Section 266.100 is amended by redesignating paragraph (b)(2) as paragraph (b)(3); revising the first sentence of paragraph (b)(1); and adding new paragraph (b)(2) to read as follows:

§ 266.100 Applicability.

* * * * *

(b) * * *

(1) Except as provided by paragraph (b)(3) of this section, the standards of this part no longer apply when an affected source demonstrates compliance with the maximum achievable control technology (MACT) requirements of part 63, subpart EEE, of this chapter by conducting a comprehensive performance test and submitting to the Administrator a Notification of Compliance under §§ 63.1207(j) and 63.1210(d) of this chapter documenting compliance with the requirements of subpart EEE. * * *

(2) Except as provided by paragraph (b)(3) of this section, the standards of this section do not apply to an owner or operator of a hazardous waste burning cement kiln, or hazardous waste lightweight aggregate kiln (as defined at § 63.1201 of this chapter) that begins construction, reconstruction, or becomes an affected source of part 63, subpart EEE of this chapter, after September 30, 1999.

* * * * *

PART 270—EPA ADMINISTERED PERMIT PROGRAMS: THE HAZARDOUS WASTE PERMIT PROGRAM

13. The authority citation for part 270 continues to read as follows:

Authority: 42 U.S.C. 6905, 6912, 6924, 6925, 6927, 6939, and 6974.

14. Section 270.19 is amended by revising paragraph (e) to read as follows:

§ 270.19 Specific part B information requirements for incinerators.

* * * * *

(e) When an owner or operator who submitted a permit application under this part before September 30, 1999, demonstrates compliance with the air emission standards and limitations in 40 CFR part 63, subpart EEE (i.e., by conducting a comprehensive performance test and submitting a Notification of Compliance documenting compliance with all applicable requirements of part 63, subpart EEE), the requirements of this section do not apply. When an owner or operator submits a permit application under this part on or after September 30, 1999, the requirements of this section do not apply. Nevertheless, the Director may apply the provisions of this section, on a case-by-case basis, for purposes of information collection in accordance with §§ 270.10(k) and 270.32(b)(2).

15. Section 270.22 is amended by revising the introductory text to read as follows:

§ 270.22 Specific part B information requirements for boilers and industrial furnaces burning hazardous waste.

When an owner or operator of a cement or lightweight aggregate kiln demonstrates compliance with the air emission standards and limitations in 40 CFR part 63, subpart EEE (i.e., by conducting a comprehensive performance test and submitting a Notification of Compliance documenting compliance with all applicable requirements of part 63, subpart EEE), the requirements of this section do not apply. When an owner or operator of a cement or lightweight aggregate kiln submits a permit application under this part on or after September 30, 1999, the requirements of this section do not apply. Nevertheless, the Director may apply the provisions of this section, on a case-by-case basis, for purposes of information collection in accordance with §§ 270.10(k) and 270.32(b)(2).

* * * * *

16. Section 270.62 is amended by revising the introductory text to read as follows:

§ 270.62 Hazardous waste incinerator permits.

When an owner or operator who submitted a permit application under this part before September 30, 1999, demonstrates compliance with the air emission standards and limitations in 40 CFR part 63, subpart EEE (i.e., by conducting a comprehensive performance test and submitting a Notification of Compliance documenting compliance with all applicable requirements of 40 CFR part 63, subpart EEE), the requirements of this section do not apply. When an owner or operator submits a permit application under this part on or after September 30, 1999, the requirements of this section do not apply. Nevertheless, the Director may apply the provisions of this section, on a case-by-case basis, for purposes of information collection in accordance with §§ 270.10(k) and 270.32(b)(2).

* * * * *

17. Section 270.66 is amended by revising the introductory text to read as follows:

§ 270.66 Permits for boilers and industrial furnaces burning hazardous waste.

When an owner or operator of a cement or lightweight aggregate kiln who submitted a permit application under this part before September 30, 1999, demonstrates compliance with the air emission standards and limitations in 40 CFR part 63, subpart EEE (i.e., by conducting a comprehensive performance test and submitting a Notification of Compliance documenting compliance with all applicable requirements of 40 CFR part 63, subpart EEE), the requirements of this section do not apply. When an owner or operator of a cement or lightweight aggregate kiln submits a permit application under this part on or after September 30, 1999, the requirements of this section do not apply. Nevertheless, the Director may apply the provisions of this section, on a case-by-case basis, for purposes of information collection in accordance with §§ 270.10(k) and 270.32(b)(2).

* * * * *

[FR Doc. 01–16426 Filed 7–2–01; 8:45 am]

BILLING CODE 6560–50–U

DEPARTMENT OF TRANSPORTATION

Research and Special Programs Administration

49 CFR Part 171

[Docket No. RSPA–99–5013 (HM–229)]

RIN 2137–AD21

Hazardous Materials: Revisions to Incident Reporting Requirements and the Hazardous Materials Incident Report Form

AGENCY: Research and Special Programs Administration (RSPA), DOT.

ACTION: Notice of proposed rulemaking (NPRM).

SUMMARY: RSPA is proposing revisions to the current incident reporting requirements of the Hazardous Materials Regulations and the hazardous materials incident report form, DOT Form F 5800.1. The major changes proposed by RSPA in this NPRM include: collecting more specific information on the incident reporting form; expanding reporting exceptions; expanding reporting requirements to persons other

than carriers; reporting undeclared shipments of hazardous materials; notifying shippers of incidents; and reporting non-release incidents involving bulk packages. The revisions are intended to increase the usefulness of data collected for risk analysis and management by government and industry and, where possible, provide relief from regulatory requirements.

DATES: Send your comments on or before October 1, 2001. To the extent possible, we will consider comments received after this date in making our decision on a final rule.

ADDRESSES: Address your comments to the Dockets Management System, U.S. Department of Transportation, Room PL 401, 400 Seventh St., SW, Washington, DC 20590–0001. You must identify the docket number, RSPA–99–5013 (HM–229) at the beginning of your comments, and you should submit two copies of your comments. If you wish to receive confirmation that your comments have been received, include a self-addressed stamped postcard. You may also submit your comments and review all comments by accessing the Docket Management System website at *http://dms.dot.gov.* Click on ''Help and Information'' to obtain instructions for filing a document electronically.

The Dockets Unit is located on the Plaza Level of the Nassif Building at the U.S. DOT at the above address. You may view public dockets between the hours of 9:00 a.m. and 5:00 p.m., Monday through Friday, except on Federal holidays. An electronic copy of this document may be downloaded from the **Federal Register** Electronic Bulletin Board Service at (202) 512–1661. Internet users may reach the **Federal Register's** home page at: http://www.nara.gov/nara/fedreg, the Government Printing Office's database at http://www.access.gpo.gov/su_docs, or the Office of Hazardous Materials Safety at http://rspa.dot.gov/rulemake.htm. You may obtain copies of DOT Form F 5800.1 and the instruction booklet for completing DOT Form F 5800.1 at the Office of Hazardous Materials Safety's web site at http://hazmat.dot.gov/spills.htm or http://hazmat.dot.gov/ohmforms.htm#incidents.

FOR FURTHER INFORMATION CONTACT: Michael Johnsen or Diane LaValle, at the Office of Hazardous Materials Standards, telephone (202) 366–8553 or Kevin Coburn, at the Office of Hazardous Materials Planning & Analysis, telephone (202) 366–4555, Research and Special Programs Administration.

SUPPLEMENTARY INFORMATION:

I. Background

Quality data supporting causal, trend, and risk analysis is fundamental to an effective safety program. The importance of data to the hazardous materials transportation safety program was highlighted in both a ONE DOT Flagship Initiative on Hazardous Materials Handling/Incidents (HazMat Flagship) and a recently completed Department-wide Hazardous Materials Program Evaluation (HMPE). The HazMat Flagship identifies the set of new and ongoing actions relating to hazardous materials transportation that has the greatest potential impact on safety and program operation and that benefits from a cooperative ONE DOT approach. Information on DOT's Flagship Initiatives can be found at: *http://www.dot.gov/onedot/flagship.htm.* The HMPE used a multi-modal team to conduct a Department-wide program evaluation to document and assess the effectiveness of the Department's hazardous materials transportation safety program. The team's final report can be found at: *http://hazmat.dot.gov/hmpe.htm.*

The hazardous materials transportation safety program relies on DOT Form F 5800.1, Hazardous Materials Incident Report, to gather basic information on incidents that occur during transportation and that meet specified criteria as required in § 171.16 of the Hazardous Materials Regulations (HMR; 49 CFR Parts 171–180). RSPA last revised this form in 1989. In 1999, we received roughly 17,500 incident reports. The Research and Special Programs Administration (RSPA, we) use the data and information reported by carriers to:

- Evaluate the effectiveness of the existing regulations and industry operating procedures;
- Determine the need for regulatory changes to cover changing transportation safety problems; and
- Identify major problem areas that should receive priority attention.

In addition, both the government and industry use this information to chart trends, identify problems and training inadequacies, evaluate packagings, and assess ways to reduce releases.

Although the current incident report form provides useful information and is generally recognized as being fundamentally sound, room for improvement exists. Both the HazMat Flagship initiative and the HMPE emphasized the need to obtain more accurate and complete data on incidents. We believe the opportunity exists to obtain better, more detailed information on events with potentially greater consequences; to provide more descriptive information to help determine root causes of events; to offer better linkages so that data can be coupled (for example, registration numbers and fire and police report numbers); and to better structure the report form to facilitate complete and accurate responses.

Our experience using data generated by the current form has identified certain deficiencies. Rulemakings such as HM–225A, ''Revision to Regulations Governing Transportation and Unloading of Liquefied Compressed Gases,'' and HM–213B, ''Safety Requirements for External Product Piping on Cargo Tanks Transporting Flammable Liquids,'' have demonstrated the difficulties involved with using DOT Form 5800.1 data to determine precise failure modes and causes. These rulemakings also underscore the unreliability of cost information and the need to update this and other data as better information becomes available after initial submission of the form in the time period prescribed by regulation.

The National Transportation Safety Board (NTSB) has issued a number of recommendations related to data collection and processing developed during the course of their investigations. NTSB Recommendation H–92–6 suggests establishment of a program to collect information necessary to identify patterns of cargo tank equipment failures, including the reporting of all accidents involving a DOT specification cargo tank. Revising DOT Form 5800.1 offers a viable way to implement this recommendation by enabling us to obtain a more complete profile of accident scenarios, including ''success stories,'' through which packaging integrity issues can be more thoroughly evaluated. We believe gathering such information on all bulk packagings involved in incidents where the packaging, appurtenances, or damage protection devices receive structural damage is a logical extension of this philosophy.

Another example of an NTSB recommendation that can be implemented though revision to DOT Form 5800.1 is ensuring that there is formal feedback from carriers to shippers when an incident has occurred (recommendation R–89–52). The need for this latter recommendation is supported by FAA experience with shippers who have been unaware of packaging failures.

In addition, the National Risk Assessment for Selected Hazardous Materials performed for RSPA by the

Argonne National Laboratory and the University of Illinois relied on incident data as a basic input into the study and recommended changes in a number of areas. Risk practitioners in government and industry offered suggestions for improved reporting of incident data in a white paper produced under the auspices of the Transportation Research Board.

Undeclared hazardous materials shipments, particularly in the air mode, are a safety issue of high visibility and concern within the Department. This issue received significant attention in the HazMat Flagship and was recognized by the HMPE as an important area where better understanding of the frequency and impact of such shipments is essential. Data obtained through reporting of discoveries of such shipments, whether or not the material is released, can help in defining the extent of the problem and developing programs to mitigate the risk involved. DOT Form 5800.1 is an efficient way to capture this data. Such data, even though it represents only undeclared hazardous materials that are discovered rather than the full spectrum of undeclared hazardous material shipments, can play a significant role in monitoring trends and measuring the effects of efforts to reduce undeclared shipments.

We are cognizant of the burden often imposed by regulatory requirements. As we develop proposed changes to the incident reporting requirements, we are seeking to minimize any additional burden associated with the revised requirements. For instance, we are proposing to add exceptions to reporting requirements for small releases of materials that pose the least hazard where sufficient data already exists to manage risk. Further, we believe certain data fields that ask for information that is obtainable from other sources can be deleted. Land use at the incident site is an example of the latter case.

As part of early efforts to consider possible revisions and following a meeting between DOT and members of several trade associations concerning hazardous materials incident reporting, the Association of American Railroads sponsored a workgroup with segments of the transportation community to discuss the DOT Form F 5800.1 and reporting requirements of §§ 171.15 and 171.16. The workgroup meetings were held during the winter of 1997–98. Participants included representatives of all four transportation modes and RSPA, shippers, container manufacturers, and labor. The workgroup drafted suggestions and submitted them to RSPA. We developed questions based on input from these meetings, the DOT modal agencies, and other concerned individuals, and on our own initiative.

On March 23, 1999, we published an advance notice of proposed rulemaking (ANPRM; 64 FR 13943) that asked a series of questions regarding the need to change the current reporting requirements or the current incident report form. We received approximately 40 comments from industry associations, state and local governments, non-profit associations, and carriers. These comments are discussed in Section III of this preamble.

II. Current Requirements

Currently, § 171.15 requires carriers to immediately notify the National Response Center (NRC) after any incident that occurs during transportation in which, as a direct result of hazardous materials:

(1) A person is killed;

(2) A person receives injuries requiring hospitalization;

(3) Estimated carrier or other property damage exceeds $50,000;

(4) An evacuation of the general public occurs for one hour or more;

(5) One or more major transportation arteries or facilities are closed for one hour or more;

(6) The operational flight pattern or routine of an aircraft is altered;

(7) Fire, breakage, spillage, or suspected radioactive contamination occurs involving shipments of radioactive material or infectious substances;

(8) There has been a release of a marine pollutant in a quantity exceeding 450 L (119 gallons) for liquids or 400 kg (882 pounds) for solids; or

(9) A situation exists of such a nature (e.g., a continuing danger to life exists at the scene of the incident) that, in the judgment of the carrier, it should be reported to the Department even though it does not meet any other immediate notification criteria.

Carriers may report any of these incidents involving aircraft to the Federal Aviation Administration (FAA). In addition, certain incidents involving infectious substances must be reported to the Centers for Disease Control (CDC).

Each carrier required to make a report under § 171.15 is also required to complete DOT Form F 5800.1 in accordance with § 171.16. Additionally, unless excepted, a carrier is required to submit DOT Form F 5800.1 for any incident occurring during transportation that results in an unintentional release of a hazardous material from its package or the discharge of any quantity of hazardous waste.

We use the data and information reported by carriers to:

(1) Evaluate the effectiveness of the existing regulations and industry operating procedures;

(2) Determine the need for regulatory changes to cover changing transportation safety problems; and

(3) Identify major problem areas that should receive priority attention.

In addition, both the government and industry use this information to chart trends, identify problems and training inadequacies, evaluate packagings, and assess ways to reduce releases.

In considering how to update the incident report form, our primary objective is to ensure that useful information is captured in an efficient manner. We believe it is possible to improve the structure and format of the form to make it easier to understand and complete accurately. To reduce the reporting burden on persons responsible for completing the incident report, we believe certain existing fields that ask for information that is obtainable from other sources can be deleted. Land use at the incident site is an example. We also believe it is appropriate to add information in certain areas where it can help determine future program direction and support measures of program effectiveness. For example, a good description of packaging performance, documenting both failures and successes, helps us define future requirements. In addition, undeclared hazardous materials is a problem area of significant safety concern to DOT, and the ability to identify the frequency and source of such shipments is important in efforts to reduce their occurrence. A complete description of changes to the content of the form is provided in the following sections.

III. Summary of Issues, Comments and RSPA Proposals

The major changes proposed by RSPA in this NPRM include:

(1) collecting more specific information on the incident reporting form;

(2) expanding reporting exceptions;

(3) expanding reporting requirements to persons other than carriers;

(4) reporting undeclared shipments of hazardous materials;

(5) notifying shippers of incidents; and

(6) reporting non-release incidents involving bulk packages.

These and other proposals are discussed in detail in the following paragraphs.

In the ANPRM, we posed 35 questions concerning possible revisions to DOT

Form F 5800.1 and the associated sections of the HMR. These 35 questions are grouped into the following ten general issues:

(1) Electronic filing
(2) Revisions to the form
(3) One-call reporting
(4) Expansion of reporting requirements to persons other than carriers
(5) Exceptions to incident reporting
(6) Criteria for telephonic notification
(7) Updates to reports
(8) Reporting when no hazardous material is released during an incident
(9) Undeclared shipments of hazardous materials that do not result in a release
(10) Notifying shippers of incidents.

1. *Electronic filing.* The ANPRM noted that we are considering optional filing of incident reports by facsimile (fax), electronic mail (e-mail), and the Internet, and asked for recommendations concerning implementation of an electronic filing option. Electronic filing of incident reports is consistent with the requirements of the Government Paperwork Elimination Act (GPEA), which generally mandates that, by October 2003, agencies accept electronic documents and electronic signatures for the transactions that they conduct with the public and regulated parties.

All commenters support an electronic filing option. Commenters state that fax, e-mail, and Internet submissions should be available to facilitate reporting. However, commenters also state that electronic filing should be optional rather than mandatory.

We agree that electronic filing of incident reports would reduce the reporting burden on industry and increase reporting flexibility. However, because of logistical difficulties, all means of electronic filing will not be immediately available. In this NPRM, we are proposing to accept incident reports by fax and e-mail. Concurrent with the continued development of this rulemaking action, we intend to develop a capability to receive incident report forms through additional electronic means, such as a web-based form and electronic file transfers.

2. *Revisions to the form.* We received a number of comments concerning the format of the current DOT Form F 5800.1. Some commenters suggest that we develop a different form for each mode or packaging type. Commenters also state that an abbreviated form would be useful for reporting smaller incidents.

We agree that more detailed information concerning specific modes of transportation or specific packaging types would improve our incident database. However, we believe that having more than one incident report form would be confusing to the regulated industry. Therefore, in this NPRM, we are proposing a single multi-section form. Reporting incidents on a single form will avoid confusion as to which form to submit. The proposed form includes ''General Incident Information,'' ''Consequences,'' and ''Packaging Information'' sections that would be completed by everyone reporting an incident. In addition, the proposed form includes modal or special information sections that would be completed only if certain conditions were met.

In considering how to update the incident report form, our primary objective is to ensure that useful information is captured in an efficient manner. We believe it is possible to improve the structure and flow of the form to make it easier to understand and complete accurately. We are proposing to delete certain existing fields that ask for information that is obtainable from other sources or can be extrapolated from other fields. We believe the fields ''Is material a hazardous substance?,'' ''Was the RQ met?,'' and the ''Land Use and Community Type'' questions fall into this category. Similarly, the ''Highway Type'' and ''Number of Lanes at a Vehicle Accident/Derailment site'' can be determined from other sources. In addition, the consignee name and address information and the type of labeling or placarding fields have been found to offer limited benefit to safety improvements, and we propose to remove them.

Additional information in certain areas is needed to help determine future program direction and support measures of program effectiveness. Separate fields for information on packing group, hazardous wastes and toxic by inhalation materials would allow us to better identify the materials involved in incidents. Further, we believe the inclusion of cross-reference fields, such as the NRC report number and the Hazardous Materials registration number, will help broaden the ties the incident data has with other Federal hazardous materials data.

We also believe gathering additional information on the types of persons who respond to incidents, the types of persons who are killed, injured or need to be evacuated, as well as how long evacuations or closures last, will contribute to incident risk analysis. The more detailed questions concerning air transport incidents and questions directed to specific types of packagings will allow for more focused review of where and how packages fail. Additionally, the ability to identify the frequency and source of undeclared hazardous materials shipments, an area of significant safety concern to DOT, is important to reducing their occurrence.

We are also proposing to revise the packaging sections of the incident report form to eliminate duplicative and confusing formatting and to enable us to gather more specific packaging information. For example, we propose to replace check boxes to identify damage to packagings with failure codes specific to each packaging type. Use of failure codes was one of the recommendations coming from the Association of American Railroads workgroup discussed in Section I. Use of failure codes allows the preparer to select from a set of choices appropriate to the particular packaging type involved. Also, we believe use of terminology appropriate for the particular packaging type will help avoid confusion and ultimately make it easier for the preparer to complete the incident report.

The expansion will add about 15 data fields to the basic incident information. We believe the benefits to be gained by collecting more detailed information will require only minimal additional time to report these mostly short yes/no or fill-in-the-blank fields. Further, we have reformatted the proposed incident report form to facilitate completion (e.g., more white space and a more logical flow from item to item). While this reformatting has added more pages to the form, we believe that this design will improve accuracy and make the form easier to complete.

The draft of the form that appears in the appendix to this NPRM is for review of question format and content only and does not reflect the final layout of the actual form. We anticipate that the form layout will be similar to the most recent U.S. Census form, which included proper spacing for digital scanning and ease of use considerations.

The proposed revised form is included as Appendix A to this NPRM. The proposed instructions for completing the form appear as Appendix B. We ask that reviewers of the proposed incident report form focus on the following questions related to the contents of the form: (1) are critical data elements missing that should be added?; (2) what data elements currently included on the form are candidates for elimination?; (3) do the failure codes accurately represent modes of packaging failure?; and (4) what are your suggestions for additional or more descriptive failure codes?

3. *One-call reporting.* As provided by § 171.15, certain incidents require immediate telephonic notification. Currently, except for incidents involving transportation by aircraft or releases of infectious substances, carriers are required to call the NRC. Notice involving air shipments of hazardous materials must be given to the nearest FAA Civil Aviation Security Office. Notification of incidents involving infectious substances may be made to the CDC rather than the NRC.

In this NPRM, we are proposing to eliminate the separate telephonic notification requirement for air shipments and to require all air carriers to report incidents subject to § 171.15(a) to the NRC. NRC would then make any subsequent notifications. NRC personnel are trained specifically as to which notification requirements pertain to which entities; thus, this change should result in more accurate notification to parties with a need to know. It should be noted that CDC continues to require telephonic notification for releases of infectious substances (etiologic agents). In another rulemaking (Docket No. RSPA–98–3971, HM–226, 66 FR 6942, January 22, 2001), we are proposing to clarify that a written report of an incident involving an infectious substance that is reported by telephone to CDC must also be submitted to RSPA.

4. *Expansion of reporting requirements to persons other than carriers.* Currently, the requirements for telephonic and written reporting of transportation incidents apply to carriers only. Operators of transportation facilities, such as marine terminals, who do not perform carrier functions are not required to report transportation incidents involving hazardous materials. Most commenters to the NPRM agree that the person in physical control of a hazardous material when an incident occurs during transportation should be responsible for reporting that incident. One commenter states that the person in control of a hazardous material during transportation would most likely be the person most knowledgeable about the circumstances surrounding the incident. Other commenters disagree, stating that confusion and duplicative reporting would likely result if incident reporting is required by persons other than carriers.

We agree that the person in direct control of the hazardous material while it is being transported in commerce should report any incidents. Such a requirement would capture incidents that occur when a hazardous material is outside a carrier's direct possession, but while the material is still in transportation in commerce, such as while the material is being stored incident to movement at a transfer facility.

Therefore, in this NPRM we are proposing to require each person in physical control of a hazardous material while it is in transportation in commerce to report any incident that occurs while the material is in his or her possession. For example, a temporary storage facility owner would have to report any event that meets the provisions of §§ 171.15 or 171.16 and that occurs during the time that a hazardous material is stored incident to movement. Consistent with current HMR requirements, administrative determinations, and interpretations, storage incidental to movement is storage of a transport vehicle, freight container, or package containing a hazardous material between the time that a carrier takes possession of the hazardous material until it is delivered to its destination, as indicated on the shipping paper. We believe this proposal will provide more accurate and complete information regarding hazardous materials incidents. We estimate that extending reporting requirements to persons in physical control of a hazardous material during transportation would increase the number of incident reports by about 2,040 per year.

In addition, we are proposing to revise § 171.21 to require ''the person responsible for reporting the incident,'' rather than the ''carrier,'' to make available all records and information pertaining to the incident.

5. *Exceptions to incident reporting.* Currently, the HMR provide exceptions to incident reporting for the following:

(1) Consumer commodities;

(2) Batteries, electronic storage, wet, filled with acid or alkali; and

(3) Paint and paint-related materials when shipped in packagings of five gallons or less.

In addition, hazardous materials prepared and transported as limited quantities in accordance with the HMR are excepted from incident reporting requirements. However, these exceptions do not apply to:

(1) Incidents required to be reported under § 171.15(a);

(2) Incidents involving transportation aboard aircraft;

(3) Materials in Packing Group I (except for consumer commodities); or

(4) Incidents involving the transportation of hazardous waste.

Most commenters support expansion of the current exceptions to incident reporting. One commenter suggests that exceptions be expanded to include all incidents involving loading and unloading where a small release occurs as a result of connecting and disconnecting hoses or transfer lines. Other commenters suggest that hazardous materials in smaller packagings (e.g., 5 gallons or less) be excepted from incident reporting.

We agree that exceptions to incident reporting should be applicable to small amounts of most hazardous materials that fall into our lowest risk category of hazardous materials (PG III). We now have ample data from past incidents spanning over 20 years involving PG III hazardous materials in smaller packagings to warrant a reporting exception. Incident reporting should be focused on more substantial releases where the consequences of an incident may be significant.

In this NPRM, we are proposing to except from incident reporting requirements hazardous materials incidents meeting all of the following criteria:

(1) The shipment is not being offered for transportation or transported by air;

(2) None of the criteria in § 171.15(a) apply;

(3) The material is not a hazardous waste;

(4) The material is properly classed as—

(i) ORM–D; or

(ii) A packing Group III material in Class or Division 3, 4, 5, 6.1, 8, or 9;

(5) Each packaging has a capacity of less than 20 liters (5 gallons) for liquids or less than 30 kg (66 pounds) for solids; and

(6) The total aggregate release is less than 20 liters (5 gallons) for liquids or less than 30 kgs (66 pounds) for solids.

(7) The material does not meet the definition of an undeclared hazardous material in § 171.8.

We are proposing to except small spills from the reporting requirements. We wanted only to require that an aggregate spill of 20 liters (5 gallons) or over for liquids or 30 kg (66 pounds) or over for solids of otherwise excepted hazardous materials be reported. For example, if twelve 5-gallon containers of paint are spilled, no incident report would be required unless the aggregate amount of paint released from the twelve containers is over 5 gallons or one of the conditions in § 171.15(a) is met. Based on reports received over the past five years, we expect that the proposed exceptions would reduce the total number of incident reports filed each year by about 5,000.

In addition, we are proposing to clarify existing rules to except minimal amounts of hazardous materials

escaping: (1) due to disconnecting a loading or unloading line or from the operation of venting devices (for which venting is authorized); or (2) from the manual operation of seals in equipment such as pumps, compressors, and valves during the normal course of transportation if the release does not trigger any of the provisions for a telephonic notification described in § 171.15 of this subpart and does not result in property damage.

We are requesting comments regarding additional exceptions or alternative methods for excepting small spills from the reporting requirements. We may modify the proposed exception in response to such comments.

6. *Criteria for telephonic notification.* Under current § 171.15 requirements, one of the criteria that triggers the requirement for immediate notification is property damage that exceeds $50,000. Most commenters agree that a monetary limit should not be used as a criterion for telephonic notification; they state that such a limit is arbitrary and has not been adjusted to reflect inflation. We agree and are proposing to remove the monetary criterion.

We are also proposing to clarify the requirements for ''immediate notification'' by specifying that telephonic notification must be made as soon as practicable following the occurrence of an incident and in all instances within 12 hours after an event requiring notification. This eliminates confusion surrounding the term ''immediate notification.'' This proposed revision also responds to National Transportation Safety Board (NTSB) recommendation H–99–58 to provide a specific time period to report by telephone. We invite comments as to the appropriateness of this time period or a different time period (e.g., 2 hours, 4 hours, or 24 hours).

In addition to the above, we propose to expand the telephonic notification reporting requirements to the person who has physical control of the material at the time of the transportation incident. Most commenters agree that the person in physical control of a material at the time of an incident should call the NRC.

Commenters also suggest that incidents resulting in significant environmental damage and incidents involving certain high-hazard materials be added to the current criteria for telephonic notification. We believe that the current criteria requiring immediate telephonic notification are sufficient and are not proposing any additional criteria.

7. *Updates to reports.* Commenters disagree about whether we should require updates to incident reports. Some commenters suggest that we develop criteria to identify when an incident report requires updating. Other commenters state that updates should be required when there is any change to an incident result.

We believe that substantive changes to the outcome of an incident should be updated by submitting updates to the original DOT Form F 5800.1 report. Updated information ensures the accuracy and quality of data we collect. In this NPRM, we propose to require updated incident reports for up to one year after the date of an incident for the following: (1) death resulting from injuries caused by a hazardous material; (2) corrections to the identification of the hazardous material or packaging information; and (3) certain updated damage costs as additional information becomes available. Cost information would be updated when: (1) costs not known at the time the report was filed became known; or (2) original damage/cost estimates were revised by more than $25,000. In some cases, certain costs (such as decontamination and cleanup) may not be known within 30 days of the incident's occurrence, and would not be included in the initial incident report. In other cases, some costs (such as property damage) may be significantly higher than the original estimate. We estimate that about 800 incidents reported each year would require an update.

Under § 171.21, persons required to report an incident are required to cooperate with any further investigation of that incident. In particular, incidents that we categorize as significant may require further investigation, or reports that are incomplete may require a follow-up.

8. *Reporting when no hazardous material is released during an incident.* In the ANPRM, we asked whether the incident reporting requirements should be expanded to include certain incidents that do not result in release of a hazardous material. We suggested that such information could provide a broader base for risk management in more critical transportation situations and that additional information could be used to gauge the performance and integrity of certain packagings.

Most commenters oppose data collection for an incident that does not result in a release of hazardous materials because of the increased reporting burden. We do not agree. We believe that certain incidents should be reported whether or not there is a release of hazardous material. The potential burden on operators is offset by the safety information that will be provided. For example, such reporting can provide information concerning packaging integrity, particularly the circumstances under which a packaging is able to withstand a collision or accident without releasing its contents. Thus, we are proposing to require an incident report when a bulk packaging (other than a tank car tank) has received structural damage to the lading retention system or damage that requires repair to systems intended to protect the lading retention even if no hazardous material is released. This responds to NTSB recommendation H–92–6, which requests that we collect information on cargo tanks involved in accidents with no release of a hazardous material. There is no need to collect such data for a tank car tank because this information is already required to be reported to the Federal Railroad Administration. We also propose to include Type B packagings (for radioactive materials) that have received structural damage that may adversely affect the packaging's ability to retain lading, even if no hazardous material is released, to gather statistical information compatible with our criteria for a significant incident.

9. *Undeclared shipments of hazardous materials that do not result in a release.* Undeclared shipments, particularly when offered for transportation or transported by air, pose a significant safety problem because of the potential for improper packaging, handling, and failure to communicate the hazard. Emergency responders and transportation workers are unaware of the presence of undeclared hazardous materials. Certain hazardous materials that are forbidden for air transportation may make their way onto a passenger-carrying or cargo-only aircraft, and may inadvertently be handled in an unsafe manner by transportation workers. In a hazardous material release from an undeclared shipment, the crew does not know that a hazardous material is present or what response measures to take. Commenters support gathering information on undeclared shipments of hazardous materials that do not result in a release. However, the commenters are divided as to how we should gather this information. Some commenters state that a reporting requirement specific to undeclared hazardous materials would expose their companies to undue liability and possible enforcement actions for accepting an undeclared shipment. Other commenters state that this requirement would place carriers in an enforcement role.

We believe that information on undeclared shipments should be

collected and that the incident report form is the most accessible method for collecting such data. In this NPRM, we are proposing to require an incident report when an undeclared shipment of hazardous materials is discovered. This requirement would apply to parties who are likely to discover undeclared shipments and who would benefit greatly from a reduction in such shipments, which is a goal of this rulemaking. Based on information provided by FAA, we anticipate that an increase of about 1,500 incident reports per year would result from this proposal.

If persons filing these reports had no reason to believe that they were accepting hazardous materials, DOT would not hold them responsible. Parties filing these reports would be advising DOT of unsafe conditions; DOT would independently determine whether enforcement is appropriate.

10. *Notifying shippers of incidents.* We propose to require the person responsible for completing an incident report to provide a copy of the report to the shipper whose packages were the subject of the report. The report would have to be provided within 30 days of the incident and may be provided in an electronic or written form. The 30-day time period is consistent with the time required to submit the report to RSPA. This proposal responds to NTSB Recommendation R–89–52, which recommends requiring carriers reporting hazardous materials incidents under the provisions of § 171.16 to notify shippers whose hazardous materials shipments are involved. NTSB is concerned that shippers are not receiving information about packages that are prone to failure during transportation. Since we are proposing to expand reporting requirements to persons other than carriers who have possession of a hazardous material while in transportation, the person required to report would also be required to notify the shipper of the packages involved in the incident.

We believe that this shipper notification already often occurs; however, we request comments concerning the costs of, and need to create, a requirement to assure that shippers are notified when their packages are involved in incidents.

Miscellaneous Proposals

New Definitions

We are proposing new definitions in § 171.8 for ''unintentional release,'' and ''undeclared hazardous material shipment'' to assist in clarifying the regulations.

Hazardous Waste Manifest

We are proposing removal of the requirement in § 171.16 to attach a hazardous waste manifest to the incident report form when a release involves a hazardous waste. The proposed incident report form requires the hazardous waste manifest number to be reported and provides a field for entering the number. In addition, we are proposing to remove the requirements for: 1) an estimate of the quantity of waste removed from the scene; 2) the name and address of the facility to which it was taken; and 3) the manner of disposition of any removed waste. This information is already available as a result of EPA's hazardous waste manifest regulations; thus, continued reporting of this information to RSPA is unnecessary. Removing these requirements would eliminate reporting information that is obtainable through other sources.

Record Retention Location

In this NPRM, we are proposing to require that the report be retained at either the reporter's principal place of business or other record retention site provided the report is available at the reporter's principal place of business within 24 hours of request. Currently, there is a provision in § 171.16 that requires a person reporting an incident to retain a copy of the report for two years at the reporter's principal place of business or at another place that has been authorized under the terms of an approval. We are not aware of any approvals issued under this section. We believe this proposal would provide flexibility in maintaining records without the need for an approval from DOT.

Incidents at Registered Cargo Tank Facilities

The Federal Motor Carrier Safety Administration (FMCSA) has notified RSPA of several fatalities that have occurred in registered cargo tank facilities during inspection and repair of DOT specification cargo tanks. In most cases, the cause of the incident was a failure to comply with the HMR requirements applicable to such operations (inadequate training programs, failing to clean and purge a tank before repair, etc.) Over the course of the last several years, FMCSA has attempted to gather anecdotal evidence to determine the frequency of these events. It appears that up to 10 fatalities a year may occur due to work on DOT specification cargo tanks. Because of the apparent frequency and severity of these incidents, we are interested in collecting information on these occurrences.

We request comments regarding the following:

1. Should we require the reporting of incidents that occur at registered cargo tank facilities during the inspection, testing and repair process?

2. Is this information available from other sources, such as the Occupational Health and Safety Administration or state worker protection agencies?

3. What incidents should be reported—only consequential incidents, such as those requiring telephonic reporting under § 171.15, any release requiring reporting under § 171.16, or some other criteria?

4. Should we collect information on incidents that occur while work is performed on DOT specification cargo tanks, all specifications packages or all hazardous materials packages?

Any action based on these questions would be considered in a future rulemaking.

State Notification

In addition, we were contacted by a state official, who requested that we require incidents meeting the immediate notification criteria in § 171.15 to be reported to the state in which the incident occurred. We do not believe that this is necessary. A state may require immediate, oral accident/incident reports for emergency response purposes. Further, any state may request that NRC notify it of incidents occurring within the state.

IV. Summary and Conclusion

We are proposing, among others, the following changes to the current HMR reporting requirements and to DOT Form F 5800.1:

(1) Reporting of incidents involving bulk packagings (other than tank car tanks) that receive structural damage that may adversely affect the packaging's ability to retain lading even when no hazardous material is released. (This includes Type B RAM packagings.)

(2) Reporting discoveries of undeclared hazardous material shipments.

(3) Updating incident reports when significant new information becomes available.

(4) Requiring the person in physical control of a hazardous material during transportation to report an incident.

(5) Excepting small releases of specified materials that pose the least hazard from reporting requirements.

(6) Restructuring the form to utilize failure codes to obtain information on packaging failures.

In addition, we are requesting specific comments in the following areas:

(1) What changes should be made in report content (specific data elements) and in failure codes?

(2) Are additional exceptions or alternative methods for excepting small spills from the reporting requirements appropriate?

(3) Is a 12-hour maximum an appropriate standard for ''immediate'' telephonic reporting or is a different time period (*e.g.*, 2 hours, 4 hours, or 24 hours) warranted?

(4) What would be the impact if the proposal to create a requirement assuring that shippers are notified (including possible telephonic notification) when their packagings are involved in incidents is adopted?

(5) Should we require the reporting of incidents that occur at registered cargo tank facilities during the inspection, testing, and repair process? (Also see related questions in the previous section.)

V. Regulatory Analyses and Notices

A. Executive Order 12866 and DOT Regulatory Policies and Procedures

This proposed rule is not a significant regulatory action under Executive Order 12866 and, therefore, was not reviewed by the Office of Management and Budget. This proposed rule is not a significant regulatory action under the Regulatory Policies and Procedures of the Department of Transportation (44 FR 11034). A preliminary regulatory evaluation that considers various regulatory alternatives is available for review in the public docket.

The costs of these proposed regulations identified in the regulatory evaluation are attributed to: (1) Expansion of reporting requirements to persons other than a carrier in possession of a hazardous material during transportation; (2) implementation of a requirement to update incident reports under certain conditions; (3) expansion of reporting requirements to incidents involving certain bulk packagings where no hazardous material is released; and (4) implementation of a requirement to report to the shipper that an incident has occurred. Reductions in the total costs associated with incident reporting requirements are attributed to implementation of an electronic filing option and expansion of current exceptions to the reporting requirements. The expected reductions in total costs generally offset the anticipated cost increases; thus, the proposals should result in only minimal increased costs of compliance.

While it is difficult to estimate the net benefit resulting from this rulemaking, we believe that the proposed revisions to the incident reporting requirements will greatly enhance our ability to develop strategies to reduce the risks associated with the transportation of hazardous materials. The non-quantifiable benefits of the increase in data quality attributable to this rulemaking are expected to be far greater than the negligible cost increase to the regulated community.

B. Executive Order 13132

This NPRM has been analyzed in accordance with the principles and criteria contained in Executive Order 13132 (''Federalism''). This proposed rule would preempt State, local, and Indian tribe requirements but does not propose any regulation that has substantial direct effects on the States, the relationship between the national government and the States, or the distribution of power and responsibilities among the various levels of government. Therefore, the consultation and funding requirements of Executive Order 13132 do not apply.

The Federal hazardous materials transportation law, 49 U.S.C. 5101–5127, contains an express preemption provision (49 U.S.C. 5125(b)) that preempts State, local, and Indian tribe requirements on certain covered subjects. Covered subjects are:

(1) The designation, description, and classification of hazardous materials;

(2) The packing, repacking, handling, labeling, marking, and placarding of hazardous materials;

(3) The preparation, execution, and use of shipping documents related to hazardous materials and requirements related to the number, contents, and placement of those documents;

(4) The written notification, recording, and reporting of the unintentional release in transportation of hazardous material; or

(5) The design, manufacture, fabrication, marking, maintenance, recondition, repair, or testing of a packaging or container represented, marked, certified, or sold as qualified for use in transporting hazardous material.

This proposed rule addresses covered subject item number 4 above and would preempt State, local, and Indian tribe written incident reporting requirements not meeting the ''substantively the same'' standard.

Federal hazardous materials transportation law provides at § 5125(b)(2) that, if DOT issues a regulation concerning any of the covered subjects, DOT must determine and publish in the **Federal Register** the effective date of Federal preemption. The effective date may not be earlier than the 90th day following the date of issuance of the final rule and not later than two years after the date of issuance. We propose that the effective date of Federal preemption be 180 days from publication of a final rule in this matter in the **Federal Register**.

C. Executive Order 13175

This proposed rule has been analyzed in accordance with the principles and criteria contained in Executive Order 13175 (''Consultation and Coordination with Indian Tribal Governments''). Because this proposed rule does not have tribal implications and does not impose substantial direct compliance costs, the funding and consultation requirements of the Executive Order do not apply.

D. Regulatory Flexibility Act

The Regulatory Flexibility Act (5 U.S.C. 601 *et seq.*) requires an agency to review regulations to assess their impact on small entities unless the agency determines that a rule is not expected to have a significant impact on a substantial number of small entities. Based on the assessment in the final regulatory evaluation, I hereby certify that, while the final rule will affect a substantial number of small businesses, there will be no significant economic impact.

Potentially affected small entities. The proposals in this NPRM will apply to persons in physical control of a hazardous material during transportation in commerce. Such persons primarily include motor carriers, air carriers, vessel operators, rail carriers, temporary storage facilities, and intermodal transfer facilities. Unless alternative definitions have been established by the agency in consultation with the Small Business Administration, the definition of ''small business'' has the same meaning as under the Small Business Act (15 CFR Parts 631–657c). Therefore, since no such special definition has been established, RSPA employs the thresholds (published in 13 CFR 121.201) of 1,500 employees for air carriers (NAICS Subgroup 481), 500 employees for rail carriers (NAICS Subgroup 482), 500 employees for vessel operators (NAICS Subgroup 483), $18.5 million in revenues for motor carriers (NAICS Subgroup 484), and $18.5 million in revenues for warehousing and storage companies (NAICS Subgroup 493). Of the approximately 116,000 entities to which the proposals in this NPRM would

apply (104,000 of which are motor carriers), we estimate that about 90 percent are small entities.

Potential cost impacts. The NPRM proposal to expand reporting requirements to any person in physical possession of a hazardous material while it is being transported in commerce will primarily affect storage and intermodal transfer facilities. We estimate that expanding the reporting requirements will increase the number of incident reports submitted each year by about 2,040 reports, or about 12 percent. Thus, the approximately 6,500 warehousing and storage entities subject to this requirement will incur total increased compliance costs of about $84,000 (about $13/year/company).

The proposal to require updating of incident reports under certain conditions applies to all persons subject to the HMR incident reporting regulations. We estimate that this proposal will result in about 800 updates to reports each year for a total annual cost to the approximately 116,000 transportation companies subject to this requirement of $4,800 (about 4¢/year/company).

The proposal to require reporting of certain incidents involving bulk packagings that do not result in a release of hazardous materials will apply to about 104,000 motor carriers. We estimate that this proposal will result in about 2,800 additional incident reports each year. Motor carriers will incur increased compliance costs of about $109,000 (about $1.05/year/company).

The proposal to require reporting of undeclared shipments of hazardous materials discovered during transportation will apply to all persons subject to the HMR incident reporting regulations. We estimate that this proposal will result in an increase of 1,500 incident reports per year, with corresponding increased compliance costs of $57,600 (about 50¢/year/company).

The proposal to require persons who are subject to the HMR incident reporting requirements to also report incidents to the hazardous material shipper will apply to all persons subject to the HMR incident reporting regulations. We estimate that this proposal will result in an increase in compliance costs of about $17,000 (about $1.20/year/company).

Potential cost savings. The proposals in the NPRM that will permit electronic filing of incident reports and expand the current exceptions from incident reporting requirements will offset the increased compliance costs described above. Taken together, the potential cost savings attributable to the proposals in this NPRM total about $276,000 (about $2.40/year/company).

Alternate proposals for small businesses. The Regulatory Flexibility Act suggests that it may be possible to establish exceptions and differing compliance standards for small businesses and still meet the objectives of the applicable regulatory statutes. However, given the importance of small business, as defined for purposes of the Regulatory Flexibility Act, in hazardous materials transportation, we do not believe that it would be possible to establish such differing standards and still accomplish the objectives of federal hazardous materials transportation law. The information provided in hazardous materials incident reports serves as the basis for critical RSPA safety functions, including identification of safety problems, regulations development, training programs, outreach efforts, and enforcement strategies. The risks posed by a hazardous material offered for transportation or transported by a small entity are the same as the risks posed by the same hazardous material when offered for transportation or transported by a large entity. Thus, it is entirely reasonable and appropriate for the HMR incident reporting requirements to apply equally to any person who offers for transportation or transports hazardous materials in commerce.

Conclusion. Based on the above analysis, we certify that while the proposals in this NPRM will affect a significant number of small businesses or other small entities, there will be no substantial economic impact on the identified classes of small businesses. If your business or organization is a small entity and if adoption of some or all of the proposed provisions could have a significant economic impact on your operations, please submit a comment to explain how and to what extent your business or organization could be affected.

E. Paperwork Reduction Act

Under the Paperwork Reduction Act of 1995, no person is required to respond to a collection of information unless it displays a valid Office of Management and Budget (OMB) control number. Section 1320.8(d), Title 5, Code of Federal Regulations requires that RSPA provide interested members of the public and affected agencies an opportunity to comment on information collection and recordkeeping requests. RSPA has a current information collection approval under OMB No. 2137–0039, Hazardous Materials Incident Reports, with 33,811 burden hours, $811,221.66 in annual costs, and 22,500 submitted incident reports per year. This information collection estimate, drafted in 1998, accounted for a 40% increase in incident reporting due to inclusion of intrastate carriers required to report incidents under the HM–200 rulemaking docket. The actual rate of increase attributed to that rulemaking has not been fully realized.

The average number of incident reports RSPA received for the years 1997–2000 is about 17,300, and for the years 1995–2000 is about 16,000. Our regulatory evaluation for this proposed rule uses a base number of 17,000 annual incident reports.

The proposals in this NPRM would only change information collection requirements for the DOT Form F 5800.1 under § 171.16—and not for telephonic notification requirements under § 171.15.

RSPA believes that this proposed rule may result in a modest increase in annual burden and costs. Even so, the estimated increase of an additional 810 reports per year proposed in this NPRM would result in total reports numbering far less than the 22,500 approved through our current information collection approval under OMB No. 2137–0039. Total estimated costs of written reports, including the estimated costs of this proposed rule, are also lower than the approved amount. The following figures are based on receiving 17,000 incident reports per year and only include estimates for written incident reports:

Total Annual Respondents: 1,781.

Total Annual Responses: 17,810.

Total Annual Burden Hours: 23,746.

Total Annual Burden Cost: $569,904.

RSPA specifically requests comments on the information collection and recordkeeping burdens associated with developing, implementing, and maintaining these requirements for approval under this proposed rule.

Requests for a copy of the information collection should be directed to Deborah Boothe, Office of Hazardous Materials Standards (DHM–10), Research and Special Programs Administration, Room 8102, 400 Seventh Street, SW., Washington, DC 20590–0001, Telephone (202) 366–8553.

Written comments should be addressed to the Dockets Unit as identified in the **ADDRESSES** section of this rulemaking. Comments should be received prior to the close of the comment period identified in the **DATES** section of this rulemaking. Under the Paperwork Reduction Act of 1995, no person is required to respond to an information collection unless it displays a valid OMB control number.

F. Regulation Identifier Number (RIN)

A regulation identifier number (RIN) is assigned to each regulatory action listed in the Unified Agenda of Federal Regulations. The Regulatory Information Service Center publishes the Unified Agenda in April and October of each year. The RIN number contained in the heading of this document can be used to cross-reference this action with the Unified Agenda.

G. Unfunded Mandates Reform Act

This rulemaking would not impose unfunded mandates under the Unfunded Mandates Reform Act of 1995. It would not result in costs of $100 million or more to either State, local, or tribal governments, in the aggregate, or to the private sector.

H. Environmental Assessment

RSPA believes that the proposed changes to the incident reporting system would have no significant impact on the environment. The changes proposed in this NPRM should increase the quality of data collected on hazardous materials spills, thus probably increasing our ability to evaluate potential packaging problems that result in releases to the environment. Thus, the proposed revisions should produce a small net benefit to the environment by improving the data sources used in regulatory development. Therefore, we find that there are no significant environmental impacts associated with this proposed rule.

List of Subjects in 49 CFR Part 171

Exports, Hazardous materials transportation, Hazardous waste, Imports, Reporting and record keeping requirements.

In consideration of the foregoing, we propose to amend 49 CFR part 171 as follows:

PART 171—GENERAL INFORMATION, REGULATIONS, AND DEFINITIONS

1. The authority citation for part 171 continues to read as follows:

Authority: 49 U.S.C. 5101–5127; 49 CFR 1.53.

2. In § 171.8 the following definitions are added in alphabetical order to read as follows:

§ 171.8 Definitions and abbreviations.

* * * * *

Undeclared hazardous material means a hazardous material:

(1) That is required to be described on a shipping paper in the manner required by subpart C of part 172 of this subchapter, but is offered for transportation with no indication on the shipping paper or other documentation that it is hazardous; or

(2) That is excepted from the requirements of subpart C of part 172 of this subchapter (e.g., a small quantity or ORM–D material as defined in § 173.4 and 173.144, respectively) and is in a packaging that is not marked in the manner specified in this subchapter to indicate it contains a hazardous material.

* * * * *

Unintentional release means the escape of a hazardous material from a package. This includes releases resulting from collision, packaging failures, human error, vandalism, negligence, improper packaging, or unusual conditions such as the operation of pressure relief devices as a result of over-pressurization, overfill or fire exposure. It does not include intentional releases, such as venting of packages, where allowed, and the intentional discharge of contents from packagings.

3. Section 171.15 is revised to read as follows:

§ 171.15 Immediate notice of certain hazardous materials incidents.

(a) When a hazardous materials incident occurs during transportation in commerce, each person in physical possession of the hazardous material must provide notice by telephone, as described in paragraph (b) of this section, as soon as practicable but no later than 12 hours after the incident, to the DOT's National Response Center (NRC) on 800–424–8802 (toll free) or 202–267–2675 (toll call). Notice involving an infectious substance (etiologic agent) may be given to the Director, Center for Disease Control, U.S. Public Health Service, Atlanta, Ga., 800–232–0124 (toll free), in place of notice to the NRC. Each notice must include the following information:

(1) Name of reporter;

(2) Name and address of carrier represented by reporter;

(3) Phone number where reporter can be contacted;

(4) Date, time, and location of incident;

(5) The extent of injury, if any;

(6) Class or division, proper shipping name, and quantity of hazardous materials involved, if such information is available; and

(7) Type of incident and nature of hazardous material involvement and whether a continuing danger to life exists at the scene.

(b) A telephonic report is required when an incident occurs during the course of transportation in commerce (including loading, unloading, and temporary storage) and:

(1) As a direct result of a hazardous material—

(i) A person is killed;

(ii) A person receives an injury requiring admittance to a hospital;

(iii) The general public is evacuated for one hour or more;

(iv) A transportation artery or facility is closed or shut down for one hour or more;

(v) The operational flight pattern or routine of an aircraft is altered;

(2) Fire, breakage, spillage, or suspected radioactive contamination occurs involving a radioactive material (see also § 176.48 of this subchapter);

(3) Fire, breakage, spillage, or suspected contamination occurs involving an infectious substance other than a diagnostic specimen or regulated medical waste;

(4) There has been a release of a marine pollutant in a quantity exceeding 450 L (119 gallons) for a liquid or 400 kg (882 pounds) for a solid; or

(5) A situation exists of such a nature (e.g., a continuing danger to life exists at the scene of the incident) that, in the judgment of the person in possession of the hazardous material, it should be reported to the NRC even though it does not meet the criteria of paragraph (b) (1), (2), (3) or (4) of this section.

(c) Each person making a report under this section must also make the report required by § 171.16.

Note to § 171.15: Under 40 CFR 302.6, EPA requires persons in charge of facilities (including transport vehicles, vessels, and aircraft) to report any release of a hazardous substance in a quantity equal to or greater than its reportable quantity, as soon as that person has knowledge of the release, to DOT's National Response Center at (toll free) 800–424–8802 or (toll) 202–267–2675.

4. Section 171.16 is revised to read as follows:

§ 171.16 Detailed hazardous materials incident reports.

(a) *General.* Each person in physical possession of a hazardous material during transportation at the time of a reportable incident must report the incident in writing on DOT Form F 5800.1 (Rev. XX/XX).

(b) *Reportable Incident.* A reportable incident is one that occurs during the course of transportation (including loading, unloading, and temporary storage) in which—

(1) Any of the circumstances set forth in § 171.15(a) occurs;

(2) There is an unintentional release of a hazardous material or any quantity of hazardous waste has been discharged during transportation;

(3) A bulk packaging (other than a tank car tank) containing any hazardous material or a Type B packaging containing a Class 7 hazardous material receives structural damage to the lading retention system or damage that requires repair to a system intended to protect the lading retention system, even if there is no release of hazardous material; or

(4) An undeclared hazardous material is discovered.

(c) *Updating the incident report.* An incident report must be updated within one year of the incident if—

(1) A death results from injury caused by a hazardous material;

(2) There was a misidentification of the hazardous material or packaging information on the incident report;

(3) Damage, loss or related cost that was not known when the initial report was filed becomes known; or

(4) Damage, loss, or related cost changes by $25,000 or more.

(d) *Sending and retaining copies of the report.* Each person reporting under this section must—

(1) Send the report within 30 days of the date of discovery of the incident to the Information Systems Manager, DHM–63, Research and Special Programs Administration, Department of Transportation, Washington, DC 20590–0001; and, for incidents involving transportation by aircraft, also send a copy of the report to the FAA Civil Aviation Security Office nearest the location of the incident;

(2) Retain a copy of the report, including electronically generated reports, for a period of two years at the reporter's principal place of business, or other record retention site if available at the reporter's principal place of business within 24 hours of request; and

(3) Send a copy of the report to the person who offered the hazardous material for transportation within 30 days following discovery of the incident.

(e) *Exceptions.* The requirements of paragraphs (a), (b), (c) and (d) of this section do not apply to—

(1) Releases of minimal amounts of material released from manual operation of seals, pumps, compressors, valves, during connection or disconnection of loading or unloading lines or, for materials for which venting is authorized, from vents, provided the release does not require a telephone report under the provisions of § 171.15 or result in property damage; or

(2) Incidents involving the unintentional release of hazardous material when all of the following apply:

(i) The material is not being offered for transportation or transported by air;

(ii) None of the criteria in § 171.15(a) apply;

(iii) The material is not a hazardous waste;

(iv) The material is properly classed as—

(A) ORM–D; or

(B) Class or Division 3, 4, 5, 6.1, 8, or 9 in Packing Group III;

(v) Each packaging has a capacity of less than 20 liters (5 gallons) for liquids or less than 30 kg (66 pounds) for solids;

(vi) The total aggregate release is less than 20 liters (5 gallons) for liquids or less than 30 kgs (66 pounds) for solids; and

(vii) The material does not meet the definition of an undeclared hazardous material.

5. Section 171.21 is revised to read as follows:

§ 171.21 Assistance in investigations and special studies.

(a) A shipper, carrier, packaging owner, packaging manufacturer or certifier, repair facility, or person associated with an incident under the provisions of § 171.16 must—

(1) Make all records and information pertaining to the incident available to an authorized representative or special agent of the Department of Transportation upon request.

(2) Give an authorized representative or special agent of the Department of Transportation reasonable assistance in the investigation of the incident.

(b) If an authorized representative or special agent of the Department of Transportation makes an inquiry of a person required to complete an incident report in connection with a study of incidents, the person shall—

(1) Respond to the inquiry within 30 days after its receipt or within such other time as the inquiry may specify; and

(2) Provide true and complete answers to any questions included in the inquiry.

Issued in Washington, DC, on June 27, 2001 under the authority delegated in 49 CFR part 106.

Robert A. McGuire,

Associate Administrator for Hazardous Materials Safety.

BILLING CODE 4910–60–P

Appendix to Preamble—Hazardous Material Incident Report Form and Instructions

U.S. Department of Transportation
Research and Special Programs
Administration

Hazardous Materials Incident Report

Form Approved OMB No.

INSTRUCTIONS: Submit this report to the Information Systems Manager, Office of Hazardous Materials Safety, DHM-63, Research and Special Programs Administration, U.S. Department of Transportation, Washington, D.C. 20590. If space provided for any item is inadequate, complete that item under Part 6, identifying the entry number being completed. Copies of this form, in limited quantities, may be obtained from the Information Systems Manager or from our Website at http://hazmat.dot.gov.

PART 1 - REPORT TYPE

1. This form is submitted to report:

☐ A hazardous material incident ☐ An undeclared shipment with no release

☐ A bulk packaging (other than a tank car tank) containing any hazardous materials or a Type B packaging containing a Class 7 hazardous material that (1) received structural damage to the lading retention system or damage that requires repair to a system intended to protect the lading retention system and (2) did not have a release

2. Indicate whether this is: ☐ An Initial Report ☐ A Supplemental (Follow-up) Report

PART 2 - GENERAL INCIDENT INFORMATION

3. Date of Incident: _____ **4. Time of Incident (use 24-hour time):** _____

5. Enter National Response Center Report Number (if applicable): _____

6. If you submitted a report to another Federal DOT agency, enter the agency and report number: _____

7. Location of Incident:

City _____ County _____ State _____ Zip Code (if known) _____

Street Address/Mile Marker/Yardname/ Airport/Body of Water/River Mile _____

8. Mode of Transportation: _____ 1 = Air 2 = Highway 3 = Rail 4 = Water

9. Transportation Phase: _____ 1 = In Transit 2 = Loading 3 = Unloading 4 = Temporary Storage

10. Carrier/ Reporter: Name _____

Street _____

City _____ State _____ Zip Code _____

Federal DOT ID Number _____ Hazmat Registration Number _____

11. Shipper/ Offeror: Name _____

Street _____

City _____ State _____ Zip Code _____

Hazmat Registration Number _____ Waybill/Shipping Paper Number _____

12. Origin: (If different from shipper address)

Street _____

City _____ State _____ Zip Code _____

13. Destination:

Street _____

City _____ State _____ Zip Code _____

FORM DOT 5800.1B (05-14-2001) ***Reproduction of this form is permitted***

DRAFT

14. Proper Shipping Name of Hazardous Material: _____

15. Technical/Trade Name: _____

16. Hazard Class/ Division: _____

17. Identification Number: _____ (E.g. UN 2764, NA 2020)

18. Packing Group: _____ (If Applicable)

19. Quantity Released: _____ (Include Measurement Units)

20. Was the material shipped as a hazardous waste? ☐ Yes ☐ No If yes, provide the EPA Manifest Number: _____

21. Is this a Toxic by Inhalation (TIH) material? ☐ Yes ☐ No If yes, provide the Hazard Zone: _____

22. Was the material shipped under an Exemption, Approval, or Competent Authority Certificate? ☐ Yes ☐ No

If yes, provide the Exemption, Approval, or CA number: _____

23. Was this an undeclared hazardous materials shipment? ☐ Yes ☐ No

If this is an undeclared shipment and no material was released, go to Part 4 for Air Incidents, go to Part 5 for all others.

PART 3 - CONSEQUENCES

24. Result of Incident (check all that apply): ☐ Spillage ☐ Fire ☐ Explosion

☐ Material Entered Waterway/Storm Sewer ☐ Vapor (Gas) Dispersion ☐ Environmental Damage ☐ No Release

25. Emergency Response: The following entities responded to and/or cleaned up the release: (Check all that apply.)

☐ Fire/EMS _____ (Fire/EMS Report #) ☐ Police _____ (Police Report #) ☐ In-house cleanup ☐ Other Cleanup

26. Damages:

Was the total damage cost more than $500? ☐ Yes ☐ No

If yes, enter the following information: If no, go to question 27.

Material Loss:	Carrier Damage:	Property Damage:	Response Cost:	Remediation/Cleanup Cost:
$ _____	$ _____	$ _____	$ _____	$ _____

(See damage definitions in the instructions.)

☐ Yes ☐ No **27a. Did the hazardous material cause or contribute to a human fatality?**
If yes, enter the number of fatalities resulting from the hazardous material:

Fatalities: _____ Employees _____ Responders _____ General Public

☐ Yes ☐ No **27b. Were there human fatalities that did not result from the hazardous material?** If yes, how many? _____

☐ Yes ☐ No **28. Did the hazardous material cause or contribute to a personal injury?**
If yes, enter the number of injuries resulting from the hazardous material:

Hospitalized: (Admitted Only) _____ Employees _____ Responders _____ General Public

Non-Hospitalized: (On Site First Aid; Observation, Released) _____ Employees _____ Responders _____ General Public

FORM DOT 5800.1B (05-14-2001) ***Reproduction of this form is permitted***

DRAFT

☐ Yes ☐ No **29. Did the hazardous material cause or contribute to an evacuation?**
If yes, provide the following information:

Number of persons evacuated: _____ Class of persons evacuated: _____ Employees _____ General Public

Duration of evacuation: _____ (hours)

☐ Yes ☐ No **30. Was a major transportation artery or facility closed?** If yes, how long? _____ (hours)

☐ Yes ☐ No **31. Was the material involved in a crash or derailment?**
If yes, provide the following information: Estimated speed (mph): _____ Weather conditions: _____

Vehicle overturn? ☐ Yes ☐ No Vehicle left roadway/track? ☐ Yes ☐ No

PART 4 - AIR INCIDENT INFORMATION

☐ Yes ☐ No **32. Was the shipment on a passenger aircraft?**
If so, was it tendered as cargo, or was the hazardous material in passenger baggage?

_____ Cargo _____ Passenger baggage

33. Where did the incident occur (if unknown, enter the location where the incident was discovered)?

_____ Air carrier cargo facility _____ Sort center _____ Baggage area

_____ By surface to/from airport _____ During flight _____ During loading/unloading of aircraft

34. What phase(s) had the shipment already undergone prior to the incident? (Check all that apply)

_____ Shipment had not been transported _____ Transport by air (subsequent flights)

_____ Initial transport by highway to cargo facility _____ Transfer at sort center/cargo facility

_____ Transport by air (first flight)

DRAFT

 Reproduction of this form is permitted

PART 5 - PACKAGING INFORMATION

35. Check Packaging Type: ☐ Non-bulk ☐ IBC ☐ Cargo Tank Motor Vehicle (CTMV) ☐ Tank Car
☐ Cylinder ☐ RAM ☐ Portable Tank ☐ Other _____

36. Enter the appropriate failure codes (found at the end of this form or in the instructions). Be sure to enter the codes from the list corresponding to the particular packaging type checked above.

What Failed: _____ _____ _____ (Enter up to 3 Codes)
How Failed: _____ _____ _____ (Enter up to 3 Codes)
Cause(s) of Failure: _____ _____ _____ (Enter up to 3 Codes)

37. Provide the packaging identification markings, if available.

Identification Markings: _____
(Examples: 1A1/Y1.4/150/92 /USA/RB/93/RL, UN 31H1/Y0493/USA/M9399/10800/1200, DOT-105A100W (rail), DOT 406 (highway), DOT 51, DOT-3A)

For Non-bulk, IBC, or non-specification packaging, if identification markings are incomplete or unavailable, see instructions and complete the following:

Single or Outer Packaging:

Type: _____

Material of Construction: _____

Head Type (Drums only): ☐ Removable ☐ Non-Removable

Inner Packaging (if any):

Type: _____

Material of Construction: _____

38. Describe the packaging capacity and the quantity:

Single or Outer Packaging:

Packaging Capacity: _____

Amount in Package: _____

Number in Shipment: _____

Number Failed: _____

Inner Packaging (if any):

Packaging Capacity: _____

Amount in Package: _____

Number in Shipment: _____

Number Failed: _____

39. Provide packaging construction and test information, as appropriate:

Manufacturer: _____ Manufacture Date: _____

Serial Number: _____ Last Test Date: _____

Material of Construction: _____ (if Tank Car, CTMV, Portable Tank, or Cylinder)

Design Pressure: _____ (if Tank Car, CTMV, or Portable Tank)

Shell Thickness: _____ (if Tank Car, CTMV, or Portable Tank)

Head thickness: _____ (if Tank Car or CTMV)

Service Pressure: _____ (if Cylinder)

If valve or device failed:

Type: _____ Manufacturer: _____ Model: _____

40. If the packaging is for Radioactive Materials, complete the following:

Packaging Category: _____ A = Type A B = Type B C = Type C E = Excepted I = Industrial

Packaging Certification: ☐ Self Certified ☐ U.S. Certification Certification Number _____

Nuclide(s) Present: _____ Transport Index: _____

Activity: _____ Criticality Safety Index: _____

FORM DOT 5800.1B (05-14-2001) ***Reproduction of this form is permitted***

DRAFT

PART 6 - DESCRIPTION OF EVENTS & PACKAGING FAILURE

Describe the sequence of events that led to the incident and the actions taken at the time it was discovered. Describe the package failure, including the size and location of holes, cracks, etc. Photographs and diagrams should be submitted if needed for clarification. Estimate the duration of the release, if possible. Describe what was done to mitigate the effects of the release. Continue on additional sheets if necessary.

PART 7 - RECOMMENDATIONS/ACTIONS TAKEN TO PREVENT FUTURE INCIDENTS

Describe changes (such as better training, use of superior packaging, or improved operating procedures) made to help prevent recurrences. Provide recommendations for improvements to hazardous materials transportation beyond the control of an individual company. Continue on additional sheets if necessary.

DRAFT

PART 8 - PREPARER

Preparer's Name (Type or Print): _____ Telephone Number: (___) _____

Preparer's Title: _____ Fax Number: _____

Business Name and Address: _____ Hazmat Registration Number (if not already provided):

_____ # _____

E-mail Address: _____ Date: _____

Preparer is: ☐ Carrier ☐ Shipper ☐ Facility ☐ Other _____
(Describe Other)

FORM DOT 5800.1B (05-14-2001) ***Reproduction of this form is permitted***

BILLING CODE 4910–60–C

Instructions for Completing the Hazardous Materials Incident Report—Department of Transportation Form F 5800.1

General Overview

Who Must Complete the Report?

Any person in possession of a hazardous material during transportation, including loading, unloading and storage incidental to transportation, must report to the Department of Transportation (DOT) if there is:

- an unintentional release of a hazardous material from a packaging;
- any release of a hazardous waste from a packaging;
- a bulk packaging (other than a tank car tank) or Type B packaging (used for RAM) containing a hazardous material that (1) received structural damage to the lading retention system or damage that requires repair to a system intended to protect the lading retention system and (2) did not have a release;
- an undeclared shipment of a hazardous material; OR
- a condition that meets 49 CFR 171.15.

When Is a Release Not Required To Be Reported?

You are not required to report a release of a hazardous material if ALL of the following apply:

- The shipment is not being offered for transportation or being transported by air;
- None of the criteria in § 171.15(a) apply;
- The material is not a hazardous waste;
- The material is properly classed as an ORM–D or Class or Division 3, 4, 5, 6.1, 8, or 9 in Packing Group III;
- Each packaging has a capacity of less than 20 liters (5 gallons) for liquids or less than 30 kg (66 pounds) for solids; and
- The total aggregate release is less than 20 liters (5 gallons) for liquids or less than 30 kg (66 pounds) for solids.
- The material does not meet the definition of an undeclared hazardous material in § 171.8.

Also, you are not required to report releases of minimal amounts (*e.g.*, a pint or less) of material released from the manual operation of seals of pumps, compressors, and valves, during the connecting or disconnecting of loading and unloading lines or, for materials for venting is authorized, from vents provided these releases do not result in property damage or trigger any of the telephonic notification requirements found in § 171.15.

What Is the Purpose of the Report?

The information you are providing in this report is fundamental to hazardous material transportation risk analysis and risk management by government and industry. It allows us to better understand the causes and consequences of hazardous material transportation incidents. The data is used to identify trends and provide basic program performance measures. It helps to demonstrate the effectiveness of existing regulations and to identify areas where changes should be considered. It also assists all parties, including industry segments and individual companies, in understanding the types and frequencies of incidents, what can go wrong, and possible measures that would prevent their recurrence. Your accurate and complete description of incidents can make a significant contribution to continual safety improvement through better regulations, cooperative partnerships, and individual efforts.

What Federal Regulation Requires Me To Submit the Report?

The Hazardous Materials Regulations (HMR; 49 CFR Parts 171–180) require that certain types of incidents be reported to the Research and Special Programs Administration (RSPA). Section 171.15 requires an immediate telephonic report (within 12 hours) of certain types of hazardous materials incidents and a follow-up written report. Section 171.16 requires a written report for certain types of hazardous materials incidents within 30 days. Each type of report is explained below.

What Definitions Should I Know in Order To Complete the Report?

In order to accurately complete the report, you should be familiar with the following terms. These definitions and several others are contained in § 171.8.

Bulk packaging—a packaging, other than a vessel or a barge, including a transport vehicle or freight container, in which hazardous materials are loaded with no intermediate form of containment and which has:

(1) A maximum capacity greater than 450 liters (119 gallons) as a receptacle for a liquid;

(2) A maximum net mass greater than 400 kilograms (822 pounds) and a maximum capacity greater than 450 liters (119 gallons) as a receptacle for a solid; or

(3) A water capacity greater than 454 kilograms (1000 pounds) as a receptacle for a gas as defined in § 173.115.

Hazardous material—a substance or material, that has been determined to be capable of posing an unreasonable risk to health, safety and property when transported in commerce, and that has been so designated. The term includes hazardous substances, hazardous wastes, marine pollutants, and elevated temperature materials as defined in 49 CFR, materials designated as hazardous under the provisions of § 172.101, and materials that meet the criteria for hazard classes and divisions in Part 173.

Hazardous substance—for the purposes of the HMR, a material, including its mixtures and solutions, that—

(1) Is listed in Appendix A of § 172.101;

(2) Is in a quantity, in one package, that equals or exceeds the reportable quantity (RQ) listed in Appendix A to § 172.101; and

(3) When in a mixture or solution—

(i) For radionuclides, conforms to paragraph 7 of Appendix A to § 172.101.

(ii) For other than radionuclides, is in a concentration by weight that equals or exceeds the concentration corresponding to the RQ of the material, as shown in the following table:

RQ Pounds (Kilograms)	Concentration by weight—Percent	Concentration by weight—PPM
5000 (2270)	10	100,000
1000 (454)	2	20,000
100 (45.4)	0.2	2,000
10 (4.54)	0.02	200
1 (0.454)	0.002	20

The term *hazardous substance* does not include petroleum, including crude oil or any fraction thereof which is not otherwise specifically listed or designated as a hazardous substance in Appendix A to § 172.101, and the term does not include natural gas, natural gas liquids, or synthetic gas usable for fuel (or mixtures of natural gas and such synthetic gas).

Hazardous waste—any material that is subject to the Hazardous Waste Manifest Requirements of the U.S. Environmental Protection Agency specified in 40 CFR Part 262.

Marine pollutant—a material that is listed in Appendix B to § 172.101 (the Hazardous Materials Table) (also see § 171.4) and, when in a solution or mixture of one or more marine pollutants, is packaged in a concentration which equals or exceeds:

(1) Ten percent by weight of the solution or mixture for materials listed in Appendix B; or

(2) One percent by weight of the solution or mixture for materials that are identified as severe marine pollutants in Appendix B.

Undeclared hazardous material—a hazardous material: (1) That is required to be described on a shipping paper in the manner required by subpart C of part 172 of this subchapter, but is offered for transportation with no indication on the shipping paper or other documentation that it is hazardous; or (2) for a hazardous material excepted from the requirements of subpart C of part 172 of this subchapter (*e.g.*, a small quantity or ORM–D material as defined in § 173.4 and 173.144, respectively) is not marked in the manner specified in this subchapter to indicate it contains a hazardous material.

Unintentional release—the escape of a hazardous material from a package. This includes releases resulting from collision, packaging failures, human error, vandalism, negligence, improper packaging, or unusual conditions such as the operation of pressure relief devices as a result of over-pressurization, overfill or fire exposure. It does not include intentional releases, such as venting of packages, where allowed, and the intentional discharge of contents from packagings.

When Must I Make a Telephonic Report?

Under § 171.15, you must provide telephone notice within 12 hours after the incident occurs when one of the following conditions occurs during the course of transportation and is a direct result of the hazardous material:

- a person is killed or hospitalized;
- the general public is evacuated for one hour or more;
- one or more major transportation arteries or facilities are closed for one hour or more;
- the operational flight plan or routine of an aircraft is altered;
- fire, breakage, spillage or suspected radioactive contamination occurs involving a radioactive material;
- fire, breakage, spillage or suspected contamination occurs involving an infectious substance (etiologic agent); or
- there is a release of a marine pollutant in a quantity exceeding 450 liters (119 gallons) for liquids or 400 kilograms (882 pounds) for solids.

You may decide that the situation should be reported even though it does not meet any of the above criteria.

What Telephone Number Do I Call To Report an Incident?

You must call 800–424–8802 (toll-free) or 202–267–2675 (toll-call) to make a telephonic incident report. This is the number to the National Response Center, which is operated by DOT. If the incident involves an infectious substance, you may notify the Director, Center for Disease Control (CDC), U.S. Public Health Service, Atlanta, Georgia, 800–232–0124 (toll-free). This call must be made within 12 hours of the events that trigger this requirement.

When Must I Submit a Written Report (DOT Form F 58001.)?

Under § 171.16, you must submit a written report within 30 days after any of the following:

- an incident that was reported by telephonic notice under § 171.15;
- an unintentional release (see definitions) of a hazardous material during transportation including loading, unloading and temporary storage related to transportation;
- a hazardous waste is released;
- an undeclared shipment with no release is discovered; OR
- a bulk packaging (other than a tank car tank) or Type B packaging (used for RAM) containing a hazardous material that (1) received structural damage that may adversely affect the packaging's ability to retain lading and (2) did not have a release.

You do not need to submit a written report for a release of a hazardous material from a package that meets ALL of the following:

- The shipment is not being offered for transportation or being transported by air;
- None of the criteria in § 171.15(a) apply;
- The material is not a hazardous waste;
- The material is properly classed as an ORM–D or Class or Division 3, 4, 5, 6.1, 8, or 9 in Packing Group III;
- Each packaging has a capacity of less than 20 liters (5 gallons) for liquids or less than 30 kg (66 pounds) for solids;
- The total aggregate release is less than 20 liters (5 gallons) for liquids or less than 30 kg (66 pounds) for solids; and
- The material does not meet the definition of an undeclared hazardous material.

Also, you are not required to report releases of minimal amounts of material released from the manual operation of seals of pumps, compressors, and valves, during the connecting or disconnecting of loading and unloading lines or, for materials for venting is authorized, from vents provided these releases do not result in property damage or trigger any of the telephonic notification requirements found in § 171.15.

A lading retention system consists of those items or equipment that provide containment of hazardous materials at some point during transportation, including loading and unloading. A cargo tank and associated piping and valves is an example of a lading retention system. Dents in a tank or damage requiring repair to an accident protection guarding the tank are examples of incidents that must be reported. Paint chips and scratches to either the tank or the accident protection are examples of incidents which do not require reporting.

How Long Do I Have To Complete the Written Report?

You must submit your written report within 30 days of discovery of the incident. You must notify the shipper of the packages that are the subject of the report within 30 days of discovery.

How and Where Do I Submit My Completed Report?

There are several ways to submit your report:

- You can mail paper copies of the report to: Information Systems Manager, DHM–63, Research and Special Programs Administration, U.S. Department of Transportation, Washington, DC 20509–0001.
- RSPA also provides a number of ways to submit the DOT Form F 5800.1 electronically.
- You may FAX your completed report to (202) XXX–XXXX
- You may complete the report over the internet through our secure website at:
- You may submit an electronic copy of your completed report to our e-mail address: spills@rspa.dot.gov
- You may also submit bulk batches of the report through bulk file transfers.

In addition, you must notify the shipper of the packages that were the subject of the incident report that an incident occurred involving their packages. This notification may be by phone, letter, e-mail,

Am I Required To Update The Information in the Report?

Yes. You must use DOT Form F 5800.1 and check ''Supplemental (Follow-up) Report'' on question #2 to provide additional information after the initial report. You are required to

provide updates for up to one year after the initial filing if more information is gained or new developments arise concerning the following:

- A death results from injuries caused by a hazardous material;
- The person responsible for preparing the original report learns that there is a misidentification of the hazardous material or packaging information;
- Damage, loss or related costs that were not known at the time the report was filed become known; or
- Revised estimates of damages, losses, and related costs result in a change of $25,000 or more to original cost estimates, even if the original estimate was under $500.

How Long Must I Keep a Copy of the Report?

You must keep a copy of each report or an electronic image of the report for two years after the date you submit it to RSPA.

Where Must I Keep a Copy of the Report?

The report must be accessible through your company's principal places of business. You must be able to make the report available upon request to authorized representatives or a special agent of the Department within 14 hours of such a request.

How Can I Get a Blank Copy of the Form F 5800.1?

There are a variety of sources for obtaining the Form F 5800.1. Please note that you are allowed to make unlimited photocopies of the form and distribute them.

- You may obtain limited copies of the form from the Information Systems Manager at the above address.
- You may download a copy of the form from our website at *http://hazmat.dot.gov/spills.htm*
- You may also fill out the Form F 5800.1 online through our secure web server at (location TBA)
- Our Fax on Demand service has copies of the instructions and the form. Call 1–800–467–4922 and choose the Fax on Demand option #2. You will want document #XXX

How Long Does it Take To Complete the Report?

RSPA anticipates that it will take you approximately 1.6 hours to complete this report. This estimate includes the time it will take you to review the instructions, search your existing data sources for information, gather the required data, and complete and review the report.

How Can I Comment on the Length of Time Needed To Complete the Report or on the Amount of Information Required in the Report?

You can send your comments on the report, and any suggestions you have for reducing the amount of time needed to complete the report, to the following address:

(1) Information Systems Manager, Office of Hazardous Materials Transportation, DHM–63, Research and Special Programs Administration, U.S. Department of Transportation, Washington, DC 20509.

Please verify that your information is accurate. Although the required information is generally available at the time of the incident, you may need to do some additional investigation in order to obtain all of the facts pertaining to deaths, injuries or damage amounts. If you submit complete and accurate information at the time you file the report, it will decrease the chance of your having to supply missing information to DOT at a later date. RSPA may follow-up on incomplete forms.

Instructions For 5800.1 Form

Please print. Fill in all applicable blanks accurately to the best of your ability.

Part 1: Report Type

Item

(1) *This form is submitted to report:* Check the box that describes why you are filling out this form. This will normally be ''a hazardous material incident.'' If you are reporting an undeclared shipment, check the corresponding box. If you are reporting a bulk packaging (other than a tank car tank) or a Type B packaging (used for RAM) containing a hazardous material that received structural damage to the lading retention system that may affect its ability to retain lading but does not release a hazardous material, check that appropriate box. You do not have to report tank car tanks receiving damage or de-railing where a release did not occur because the Federal Railroad Administration collects these incidents.

(2) *Indicate what type of report this is:* If this is an initial report, check the ''initial report'' box. If this is a follow-up to a previous report, check the ''Supplemental (follow-up) Report'' box.

Part 2: General Incident Information

(3), (4) *Date & Time of incident:* Enter the date and time the incident occurred. If you do not know the actual date and time, give the date and time you discovered the incident. Use 24-hour time for the incident time (e.g. ''2400'' for midnight, ''1200'' for noon, ''0747'' for 7:47 a.m., ''2115'' for 9:15 p.m.).

(5) *Enter National Response Center report number:* If this incident was reported to the National Response Center (NRC), fill in the report number NRC assigned to the incident.

(6) *If you were required to fill out a report for a Federal DOT modal administration, enter the modal report number:* If you were required to fill out a report for another federal DOT agency, such as the Federal Railway Administration or the Federal Motor Carrier Safety Administration, for this incident, please include the report number. This will facilitate our combination of information.

(7) *Location of Incident:* Enter the geographic location of the incident (city, county, state, street, etc.). If you do not know the actual location where the incident occurred, give the location where it was discovered. If the incident occurred at an airport or rail yard, include the name of the facility. If the incident occurred on a body of water, include the name or river mile. If you do not know the street address, or if the incident occurred on a highway, you may include a description such as ''On I–70, 15 miles west of Baltimore, MD.''

(8) *Mode of Transportation:* Enter the code that corresponds to the mode of transportation in which the incident occurred or was discovered. If the incident occurred or was discovered in a temporary storage area (e.g., a terminal or warehouse), check the box that corresponds to the mode by which the package was last transported.

(9) *Transportation Phase:* Enter the code that describes where the incident occurred in the transportation system. In transit means the incident occurred or was first discovered while the package was in the process of being transported. Temporary storage is storage incident to transportation, such as at a terminal waiting for the next leg of transportation.

(10) *Carrier/Reporter:* Provide the name, street address, Federal DOT number (if applicable), and hazmat registration number of the carrier or the person reporting the incident (if other than a carrier) in possession of the material when the incident occurred or was discovered.

(11) *Shipper/Offeror:* Enter the information about the person or entity that originally offered for transportation the material or package involved in the incident.

(12) *Origin:* Enter the origin of the shipment if the address is different than the shipper/offeror information entered in item #11.

(13) *Destination:* Enter the final destination of the shipment involved in the incident.

(14) through (19) *Hazardous Material Description:* Enter the shipping name, technical or trade name, hazard class or division, ID number, packing group and amount of material released. This information (except for the amount released) should be on the shipping paper as required in § 172.202. Include units of measurements (examples: 115 gallons, 69 tons)

(20) *Was the material shipped as a hazardous waste?* Check the box yes if the material meets the definition of a hazardous waste in § 171.8 (requires an EPA Uniform Hazardous Waste Manifest). Include the EPA Manifest number.

(21) *Is this a Toxic by Inhalation (TIH) material?* If the material involved in the incident meets the definition of a Toxic by Inhalation material in § 173.132, check the yes box and enter the Hazard Zone in the space provided.

(22) *Was the material shipped under an Exemption, Approval, or Competent Authority Certificate?* If the shipment was shipped under an exemption, an approval, or a Competent Authority Certificate, check this box and provide the assigned number.

(23) *Was this an undeclared hazardous materials shipment?* If this material was not indicated in any way to be a hazardous material even though it was required to be described as such on a shipping paper, or if the material would normally be excepted from the shipping paper requirements (such as a small quantity material) and does not have the required markings, it is considered an undeclared hazardous material shipment. If the material is an undeclared hazardous materials shipment intended or transported by air, and there was NOT a release, go to Part 4. For all other situations, skip Part 4 and proceed with Part 5.

Part 3: Consequences

(24) *Result of Release:* Check all boxes that describe what occurred during the incident or as a result of the incident. For example, in a situation where a truckload of 55 gallon drums of corrosive liquids overturns resulting in a release that contaminates a nearby wetlands and stream, the boxes ''Spillage'', ''Material Entered Waterway/Storm Sewer'' and ''Environmental Damage'' may apply.

(25) *Emergency Response:* Check all boxes that correspond with any emergency response and cleanup crews that participated in resolving the incident. If a fire crew, EMS, or police unit responded to the incident, include the report number.

(26) *Damages:* You are required to provide information on estimated damages if your damages exceed $500.00. This figure includes the cost of the material lost, property damage, vehicle damages, response costs, and clean-up costs. If you do not know these amounts at the time you complete the report, or the actual costs are revised by more than $25,000, you must submit a follow-up report after you determine the amounts. The following definitions explain each of the costs:

Material Loss: Enter the value of material released and unrecoverable. Base this entry on the amount of material released multiplied by the unit value (e.g., price per gallon or price per pound) as listed on the shipper's invoice. If the invoice is not available, estimate the cost per unit using the shipper's basis.

Carrier Damage: Enter the total value of damage incurred by the carrier. Major components include costs to repair the damaged vehicle and costs resulting from damage to cargo. If the vehicle is declared ''totaled,'' enter the insured value of the vehicle. This entry should not include damage to other property or to vehicles owned by other persons.

Property Damage: Enter the total value of costs resulting from damage to the property of others indirectly involved in the incident. These include: repair and replacement costs of other vehicles; repair and replacement costs to buildings and other fixed facilities; and restoration of open land beyond decontamination and cleanup.

Decontamination/Cleanup Cost: This value is the sum of response, disposal, and remediation costs. *Response* costs are those costs incurred immediately after the incident, and include local emergency response from police and fire departments and emergency response teams, as well as costs incurred by the responsible party. *Response* costs also include costs to contain the hazardous material released. *Disposal* costs are those costs incurred to collect, transport, and ultimately dispose of all material collected during the response phase. *Remediation* costs are those costs incurred to restore the incident scene to its pre-incident state, and could include excavation, disposal and replacement of contaminated soil, pumping, treatment and re-injection of contaminated groundwater, or absorption and disposal of hazardous material released into surface water.

(27) A: *Did the incident/accident cause or contribute to a human fatality?* If a person was fatally injured in the incident/accident, check yes and indicate the number of fatalities which resulted directly from the hazardous material.

B: *Were there fatalities that did not result from the hazardous material?* If the fatalities were not caused directly by the hazardous material, enter yes and the number of fatalities. An example: if a passenger car collided with a cargo tank carrying gasoline and the automobile driver was killed due to the collision, then the fatality was *not* caused by the hazardous material released. If, however, the accident resulted in the release of the gasoline and a resulting fire killed the driver, then the fatality *was* caused by the hazardous material

(28) *Did the hazardous material cause or contribute to a personal injury?* Enter the number of persons injured by the hazardous material. Hospitalized means *admitted* to a medical facility, not treated and released from a facility where the person was never admitted. Non-hospitalized individuals are those who may have received attention from medical personnel on-site or at a facility, but were not admitted to a medical facility. Indicate the number of employees, emergency responders (firefighters, police, medics, etc.) and members of the general public.

(29) *Did the hazardous material cause or contribute to an evacuation?* Indicate if the incident required the evacuation or removal of persons from a specific area because of possible or actual contact with the hazardous materials involved in the incident. Separately specify the numbers of employees and members of the general public. Indicate the length of the evacuation.

(30) *Was a transportation artery or facility closed?* If a road or transportation facility was closed due to the incident, indicate the duration (in hours) here.

(31) *Was the material involved in a crash or derailment?* Indicate if the hazardous material was involved in a crash or derailment. Provide the estimated speed and weather conditions at the time of the crash, such as rain, blowing snow, sleet, iced roadway, sun glare, fog, dry pavement, high winds, etc. Indicate if the vehicle overturned or left the roadway or track.

Part 4: Air Incident Information

This section is for incidents with packagings transported or intended for transportation by aircraft. If your package was not transported or intended to be transported by air, skip this section.

(32) *Was the shipment on a passenger aircraft?* Indicate whether the shipment in question was on a commercial

passenger aircraft. If so, indicate if the material was located in a passenger's baggage, either in the cabin or baggage compartment, or if the material was tendered as cargo.

(33) *Where did the incident occur or where was the discrepancy discovered?* Indicate where in the course of transportation the incident occurred or was discovered.

(34) *What phase(s) had the shipment already undergone prior to the incident?* Check all boxes which indicate the various modes the shipment had undergone before the incident occurred or was discovered.

Part 5: Packaging Information

(35) *Packaging Type:* Check the box that corresponds to the type of packaging involved in the incident. If there are multiple packaging types involved in an incident, reproduce Part 5 of the form and fill out this section for each of the packaging types. For example, if you have three different packaging types involved in the incident, you should fill out Part 5 three separate times (one for each packaging type). If the type of packaging it not represented, check the ''other'' box and enter a brief description such as ''non-specification bulk bin.''

(36) *Enter the appropriate failure codes (found at the end of this form or in the instructions). Be sure to enter the codes from the list corresponding to the particular packaging type checked above:* The failure codes that are to be entered describe what failed on the packaging, how the packaging failed, and the cause(s) of the failure. The failure codes are located on pages 16 and 17 of these instructions, as well as on the back of the actual incident reporting form. Be sure to enter the code from the list that corresponds to the particular packaging type checked above (#35). More than one code may be entered to describe the cause of failure.

(37) *Provide the complete packaging identification markings, if available:* Every specification packaging, UN or DOT, has a packaging identification printed or stamped on it or a plate attached to the packaging. Examples are provided on the form. Only fill out the second part if the marking is incomplete, destroyed, or unknown. Fill in the Outer and Inner packaging type and material of construction information, as appropriate. If the packaging is Non-bulk or Intermediate Bulk Container (IBC), use the codes below to enter the number or letter that applies for either Non-bulk or IBC packaging.

Non-bulk Packaging Identification Codes

Outer Packaging

Type

1 = Drum
2 = Wooden Barrel
3 = Jerrican
4 = Box
5 = Bag
6 = Composite Packaging

Material

A = Steel
B = Aluminum
C = Natural Wood
D = Plywood
E = Reconstituted Wood
F = Fiberboard
G = Plastic
H = Textile
I = Paper, multi-wall
J = Metal other than steel or aluminum
K = Glass, porcelain, or stoneware

Head Type

1 = Non-removable
2 = Removable

Inner Packaging

Type

1 = Bottle
2 = Can
3 = Box
4 = Bag
5 = Cylinder

Material

A = Metal (any type)
B = Glass, porcelain, or stoneware
C = Plastic
D = Fiberboard or cardboard
E = Wood (any type)

IBC Packaging Identification Codes

Material of Construction

1—Metal
2—Plastic
3—Composite
4—Fiberboard
5—Wooden
6—Flexible

(38) *Describe the packaging capacity and the quantity:* Indicate the total capacity of the inner and outer packaging. Include the actual amount in the packaging, the number of packages in the shipment, and the number of packagings that failed. Please include the units of measurements (liters, gallons, pounds, cubic feet, etc.).

(39) *Provide packaging construction and test information, as appropriate:* In the case of non-bulk packagings or IBCs enter the name of the packaging manufacturer or the symbol of the manufacturer *only if* complete identification markings were not provided in #37. Enter the date of manufacture and the serial number, if applicable. Enter the last test date if the packaging requires periodic testing. Also include the design pressure, shell thickness, head thickness, and service pressure if the failed packagings are of the type indicated in parenthesis after each question. If the packaging contained a valve, or other device that failed and resulted in a hazardous material release, enter the type, manufacturer, and model number.

(40) *If the packaging is for Radioactive Materials, complete the following:* Complete this question *only* if you had a release of a radioactive material. Indicate the package category, the packaging certification, certification number, and which nuclides were present, the transportation index (TI), activity of the nuclides, and the critical safety index.

Part 6: Description of Events and Packaging Failure

Please describe the events involved in the incident to allow us to get a better understanding of the incident. Include information that has not been collected elsewhere on this form, and include special scenarios, outstanding circumstances, or other information that provides a complete picture of the incident. Describe the sequence of events that led to the incident, the packaging failure (if any) and actions taken at the time of discovery. Submit photographs and diagrams when necessary for clarification. You may continue on additional sheets if necessary.

Part 7: Recommendations/Actions Taken to Prevent Future Incidents

Describe any recommendations you have to improve the packaging, handling, or transportation of hazardous materials. You may continue on additional sheets if necessary.

Part 8: Preparer

Provide the requested information. Make sure to check the box that describes the function you perform, either carrier, shipper, facility owner/operator, or other (and describe). Thank you for your time and effort in completing this form.

Failure Codes for Part 5 of Form DOT F 5800.1

Non-Bulk Packaging and Intermediate Bulk Containers (IBCs)

What Failed

101—Basic Material
102—Closure (e.g., cap or top)
103—Weld/Seam
104—Inner Packaging
105—Chime
106—Liner
107—Body (IBCs)
108—Inner Receptacle (IBCs)
109—Outer Frame (IBCs)
112—Pressure Relief Valve/Device
124—Hose (IBCs)

131—Gasket (IBCs)
133—Bolts (IBCs)
134—Cover (IBCs)
151—Lifting Features (IBCs)

How Failed

301—Punctured
302—Crushed
303—Cracked
304—Burst/Rupture
305—Torn Off/Damaged
306—Ripped/Torn
307—Abraded
308—Leaked
309—Vented
310—Gouged/Cut
312—Failed to Operate

Cause(s) of Failure

501—Dropped (less than 4 feet)
502—Dropped (over 4 feet)
503—Overfilled
504—Overpressurized
505—Fire, Temperature, or Heat
506—Freezing
507—Water
508—Vehicular Crash or Accident Damage
511—Inadequate Blocking and Bracing
513—Interior Corrosion
514—Exterior Corrosion
515—Abrasion
516—Too Much Weight on Package
517—Forklift Accident
518—Conveyer/Handling Equip. Mishap
519—Vandalizm
522—Defective Component/Device
524—Impact with Sharp or Protruding Object (e.g., nails)
527—Material Deterioration
528—Incompatible Product
534—Inadequate Training
535—Inadequate Procedures
537—Improper Preparation for Transportation
538—Human Error

Cylinders

What Failed

103—Weld/Seam
110—Cylinder Valve
112—Pressure Relief Valve/Device
135—Sidewall
136—Sidewall near Base
137—Neck/Shoulder

How Failed

301—Punctured
303—Cracked
304—Burst/Rupture
307—Abraded
308—Leaked
309—Vented
310—Cut/Gouged
312—Failed to Operate

Cause(s) of Failure

501—Dropped (less than 4 feet)
502—Dropped (over 4 feet)
504—Overpressurized
505—Fire, Temperature, or Heat
508—Vehicular Crash or Accident
511—Inadequate Blocking and Bracing
513—Interior Corrosion
514—Exterior Corrosion
515—Abrasion
517—Forklift Accident
518—Conveyer/Handling Equipment Mishap
519—Vandalism
520—Loose Closure/Component/Device
522—Defective Component/Device
524—Impact with Sharp or Protruding Object (e.g., nails)
528—Incompatible Product
534—Inadequate Training
535—Inadequate Procedures
538—Human Error

Portable Tanks

What Failed

103—Weld/Seam
106—Liner
109—Outer Frame
111—Safety Vent/Frangible Disc
112—Pressure Relief Valve/Device
113—Fusible Pressure Relief Device/Fusible Element
114—Vacuum Relief Valve
116—Check Valve
118—Inlet (Loading) Valve
119—Bottom Outlet Valve
124—Hose
125—Hose Adapter/Coupling
126—Loading/Unloading Line(s)
127—Pipings/Fittings
129—Flange
130—Threaded Connections
131—Gasket
133—Bolts
134—Cover
138—Tank Shell
139—Tank Head
140—Manway or Dome Cover
150—Lifting lug

How Failed

301—Punctured
302—Crushed
303—Cracked
304—Burst/Rupture
305—Torn Off/Damaged
306—Ripped/Torn
307—Abraded
308—Leaded
309—Vented
310—Cut/Gouged
311—Structural
312—Failed to Operate

Cause(s) of Failure

501—Dropped (less than 4 feet)
502—Dropped (over 4 feet)
503—Overfilled
505—Fire, Temperature, or Heat
508—Vehicular Crash or Accident
509—Rollover Accident
510—Derailment
511—Inadequate Blocking and Bracing
513—Interior Corrosion
514—Exterior Corrosion
515—Abrasion
519—Vandalism
520—Loose Closure/Component Device
521—Missing Component/Device
522—Defective Component/Device
528—Incompatible Product
529—Commodity Self-ignited, Initiating Event
530—Broken Component/Device
531—Misaligned Material/Component
534—Inadequate Training
535—Inadequate Procedures
536—Inadequate Maintenance
537—Improper Preparation for Transportation
538—Human Error

Bulk Tank Vehicles—Cargo Tank Motor Vehicles (CTMVs) and Tank Cars

What Failed

103—Weld/Seam
106—Liner
111—Safety Vent/Frangible Disc
112—Pressure Relief Valve/Device
113—Fusible Pressure Relief Device/Fusible Element
114—Vacuum Relief Valve
115—Excess Flow Valve
116—Check Valve
117—Remote Control Device
118—Inlet (Loading) Valve
119—Bottom Outlet Valve
120—Discharge Valve/Coupling
122—Vapor valve
124—Hose
125—Hose Adapter/Coupling
126—Loading/Unloading Line(s)
127—Piping/Fittings
128—Piping Shear Section (CTMVs)
129—Flange
130—Threaded Connections
131—Gasket
132—O-Rings/Seals
133—Bolts
134—Cover
138—Tank Shell
139—Tank Head
140—Manway or Dome Cover
141—Heater Coils
142—High Level Sensor
143—Fill Hole Cover
144—Gauging Device
145—Sample Line
146—Liquid Line
147—Thermometer Well
148—Washout
149—Sump

How Failed

301—Punctured
303—Cracked
304—Burst/Rupture
305—Torn Off/Damaged
307—Abraded
308—Leaked
309—Vented
310—Cut/Gouged
311—Structural
312—Failed to Operate

Cause(s) of Failure

503—Overfilled
505—Fire, Temperature, or Heat
508—Vehicular Crash or Accident
509—Rollover Accident
510—Derailment (Tank Cars)
513—Interior Corrosion
514—Exterior Corrosion
515—Abrasion
519—Vandalism
520—Loose Closure/Component/Device
521—Missing Component/Device
522—Defective Component/Device
527—Material Deterioration
528—Incompatible Product
529—Commodity Self-ignited, Initiating Event
530—Broken Component/Device
531—Misaligned Material/Component
532—Stub Sill Separation from Tank (Tank Cars)

533—Inadequate Accident Damage Protection
534—Inadequate Training
535—Inadequate Procedures
536—Inadequate Maintenance
537—Improper Preparation for Transportation
538—Human Error

Complete Listing—All Packaging Types

What Failed

101—Basic Material
102—Closure (e.g., cap or top)
103—Weld/Seam
104—Inner Packaging
105—Chime
106—Liner
107—Body
108—Inner Receptacle
109—Outer Frame
110—Cylinder Valve
111—Safety Vent/Frangible Disc
112—Pressure Relief Valve/Device
113—Fusible Pressure Relief Device/Fusible Element
114—Vacuum Relief Valve
115—Excess Flow Valve
116—Check Valve
117—Remote Control Device
118—Inlet (Loading) Valve
119—Bottom Outlet Valve
120—Discharge Valve/Coupling
122—Vapor valve
123—Liquid valve
124—Hose
125—Hose Adapter/Coupling
126—Loading/Unloading Line(s)
127—Piping/Fittings
128—Piping Shear Section
129—Flange
130—Threaded Connections
131—Gasket
132—O-Rings/Seals
133—Bolts
134—Cover
135—Sidewall
136—Sidewall near Base
137—Neck/Shoulder
138—Tank Shell
139—Tank Head
140—Manway or Dome Cover
141—Heater Coils
142—High Level Sensor
143—Fill Hole Cover
144—Gauging Device
145—Sample Line
146—Liquid Line
147—Thermometer Well
148—Washout
149—Sump
150—Lifting lug
151—Lifting Feaures

How Failed

301—Punctured
302—Crushed
303—Cracked
304—Burst/Rupture
305—Torn Off/Damaged
306—Ripped/Torn
307—Abraded
308—Leaked
309—Vented
310—Cut/Gouged
311—Structural
312—Failed to Operate

Cause(s) of Failure

501—Dropped (less than 4 feet)
502—Dropped (over 4 feet)
503—Overfilled
504—Overpressurized
505—Fire, Temperature, or Heat
506—Freezing
507—Water Damage
508—Vehicular Crash or Accident
509—Rollover Accident
510—Derailment
511—Inadequate Blocking and Bracing
513—Interior Corrosion
514—Exterior Corrosion
515—Abrasion
516—Too Much Weight on Package
517—Forklift Accident
518—Conveyer/Handling Equipment Mishap
519—Vandalism
520—Loose Closure/Component/Device
521—Missing Componet/Device
522—Defective Component/Device
524—Impact with Sharp or Protruding Object (e.g., nails)
527—Material Deterioration
528—Incompatible Product
529—Commodity Self-ignited, Initiating Event
530—Broken Component/Device
531—Misaligned Material/Component
532—Stub Sill Separation from Tank
533—Inadequate Accident Damage Protection
534—Inadequate Training
535—Inadequate Procedures
536—Inadequate Maintenance
537—Improper Preparation for Transportation
538—Human Error

[FR Doc. 01–16661 Filed 7–2–01; 8:45 am]

BILLING CODE 4910–60–P

DEPARTMENT OF TRANSPORTATION

National Highway Traffic Safety Administration

49 CFR Part 571

[Docket No. NHTSA–01–9171]

Federal Motor Vehicle Safety Standards (FMVSS); Small Business Impacts of Motor Vehicle Safety

AGENCY: National Highway Traffic Safety Administration (NHTSA), Department of Transportation (DOT).

ACTION: Notice of regulatory review; request for comments.

SUMMARY: The National Highway Traffic Safety Administration (NHTSA) seeks comments on the economic impact of its regulations on small entities. As required by section 610 of the Regulatory Flexibility Act, we are attempting to identify rules that may have a significant economic impact on a substantial number of small entities. We also request comments on ways to make these regulations easier to read and understand. The focus of this notice is rules that specifically relate to passenger cars, multipurpose passenger vehicles, trucks, buses, trailers, and motorcycles.

DATES: Comments must be received on or before August 14, 2001.

ADDRESSES: You should mention the docket number of this document in your comments and submit your comments in writing to: Docket Management System, U.S. Department of Transportation, Room PL–401, 400 Seventh Street, SW, Washington, DC, 20590. You may call Docket Management at: (202) 366–9324. You may visit the Docket from 10 am to 5 pm Monday through Friday.

FOR FURTHER INFORMATION CONTACT: Nita Kavalauskas, Office of Regulatory Analysis and Evaluation, Office of Plans and Policy, National Highway Traffic Safety Administration, U.S. Department of Transportation, 400 Seventh Street, SW, Washington, DC, 20590. Telephone: (202) 366–2584. Facsimile (fax): (202) 366–2559.

SUPPLEMENTARY INFORMATION:

I. Section 610 of the Regulatory Flexibility Act

A. Background and Purpose

Section 610 of the Regulatory Flexibility Act of 1980 (Pub. L. 96–354), as amended by the Small Business Regulatory Enforcement Fairness Act of 1996 (Pub. L. 104–121), requires agencies to conduct periodic reviews of final rules that have a significant economic impact on a substantial number of small business entities. The purpose of the reviews is to determine whether such rules should be continued without change, amended, or rescinded, consistent with the objectives of applicable statutes, to minimize any significant economic impact of the rules on a substantial number of such small entities.

B. Review Schedule

The Department of Transportation (DOT) published its Semiannual Regulatory Agenda on November 22, 1999, listing in Appendix D (64 FR 64684) those regulations that each operating administration will review under section 610 during the next 12 months. Appendix D also contains DOT's 10-year review plan for all of its existing regulations.

The National Highway Traffic Safety Administration (NHTSA, ''we'') has divided its rules into 10 groups by subject area. Each group will be reviewed once every 10 years, undergoing a two-stage process-an

Analysis Year and a Review Year. For purposes of these reviews, a year will coincide with the fall-to-fall publication schedule of the Semiannual Regulatory Agenda. Thus, Year 1 (1998) began in fall of 1998 and ends in the fall of 1999; Year 2 (1999) begins in the fall of 1999 and ends in the fall of 2000; and so on.

During the Analysis Year, we will request public comment on and analyze each of the rules in a given year's group to determine whether any rule has a significant impact on a substantial number of small entities and, thus, requires review in accordance with section 610 of the Regulatory Flexibility Act. In each fall's Regulatory Agenda, we will publish the results of the analyses we completed during the previous year. For rules that have subparts, or other discrete sections of rules that do have a significant impact on a substantial number of small entities, we will announce that we will be conducting a formal section 610 review during the following 12 months.

The section 610 review will determine whether a specific rule should be revised or revoked to lessen its impact on small entities. We will consider: (1) The continued need for the rule; (2) the nature of complaints or comments received from the public; (3) the complexity of the rule; (4) the extent to which the rule overlaps, duplicates, or conflicts with other federal rules or with state or local government rules; and (5) the length of time since the rule has been evaluated or the degree to which technology, economic conditions, or other factors have changed in the area affected by the rule. At the end of the Review Year, we will publish the results of our review.

The schedule has been revised from its listing in the Semiannual Regulatory Agenda on November 22, 1999. A major revision to Parts 591 through 594 has been proposed. Thus, we deemed it appropriate to delay our small business impact review of these parts from year 3 to year 8, and move the other regulations forward one year.

The following table shows the 10-year analysis and review schedule:

NHTSA SECTION 610 REVIEW PLAN [1]

Year	Regulations to be reviewed	Analysis year	Review year
1	49 CFR parts 501 through 526 and 571.213	1998	1999
2	49 CFR 571.131, 217, 220, 221, and 222	1999	2000
3	49 CFR 571.101 through 571.110 and 571.135	2000	2001
4	49 CFR parts 529 through 579, except part 571	2001	2002
5	49 CFR 571.111 through 571.129 and parts 580 through 590	2002	2003
6	49 CFR 571.201 through 571.212	2003	2004
7	49 CFR 571.214 through 571.219, except part 217	2004	2005
8	49 CFR parts 591 through 594	2005	2006
9	49 CFR 571.223 through 571.304, part 500 and new parts and subparts under 49 CFR	2006	2007
10	23 CFR parts 1200's and 1300's and new parts and subparts under 23 CFR	2007	2008

[1] Revised schedule.

C. Regulations Under Analysis

During Year 3 (2000), the Analysis Year, we will conduct a preliminary assessment of the following sections of 49 CFR part 571:

Section	Title
571.101	Controls and displays.
571.102	Transmission shift lever sequence, starter interlock, and transmission braking effect.
571.103	Windshield defrosting and defogging systems.
571.104	Windshield wiping and washing systems.
571.105	Hydraulic and electric brake systems.
571.106	Brake hoses.
571.108	Lamps, reflective devices, and associated equipment.
571.109	New pneumatic tires.
571.110	Tire selection and rims.
571.135	Passenger car brake systems.

We are seeking comments on whether any requirements in §§ 571.101 through 571.110 and 571.135 have a significant economic impact on a substantial number of small entities. ''Small entities'' include small businesses, not-for-profit organizations that are independently owned and operated and are not dominant in their fields, and governmental jurisdictions with populations under 50,000. Business entities are generally defined as small businesses by Standard Industrial Classification (SIC) code, for the purposes of receiving Small Business Administration (SBA) assistance. Size standards established by SBA in 13 CFR 121.201 are expressed either in number of employees or annual receipts in millions of dollars, unless otherwise specified. The number of employees or annual receipts indicates the maximum allowed for a concern and its affiliates to be considered small. If your business or organization is a small entity and if any of the requirements in §§ 571.101 through 571.110 and 571.135 have a significant economic impact on your business or organization, please submit a comment to explain how and to what degree these rules affect you, the extent of the economic impact on your business or organization, and why you believe the economic impact is significant.

If the agency determines that there is a significant economic impact on a substantial number of small entities, it will ask for comment in a subsequent notice during the Review Year on how these impacts could be reduced without reducing safety.

II. Plain Language

A. Background and Purpose

Executive Order 12866 and the President's memorandum of June 1, 1998, require each agency to write all rules in plain language. Application of the principles of plain language includes consideration of the following questions:

- Have we organized the material to suit the public's needs?
- Are the requirements in the rule clearly stated?
- Does the rule contain technical language or jargon that is not clear?
- Would a different format (grouping and order of sections, use of headings, paragraphing) make the rule easier to understand?
- Would more (but shorter) sections be better?
- Could we improve clarity by adding tables, lists, or diagrams?
- What else could we do to make the rule easier to understand?

If you have any responses to these questions, please include them in your comments on this document.

B. Review Schedule

In conjunction with our section 610 reviews, we will be performing plain language reviews over a ten-year period on a schedule consistent with the section 610 review schedule. We will review §§ 571.101 through 571.110 and 571.135 to determine if these regulations can be reorganized and/or rewritten to make them easier to read, understand, and use. We encourage interested persons to submit draft regulatory language that clearly and simply communicates regulatory requirements, and other recommendations, such as for putting information in tables that may make the regulations easier to use.

Comments

How Do I Prepare and Submit Comments?

Your comments must be written and in English. To ensure that your comments are correctly filed in the Docket, please include the docket number of this document in your comments.

Your comments must not be more than 15 pages long. (49 CFR 553.21.) We established this limit to encourage you to write your primary comments in a concise fashion. However, you may attach necessary additional documents to your comments. There is no limit on the length of the attachments.

Please submit two copies of your comments, including the attachments, to Docket Management at the address given above under **ADDRESSES.**

Comments may also be submitted to the docket electronically by logging onto the Docket Management System website at http://dms.dot.gov. Click on ''Help & Information'' or ''Help/Info'' to obtain instructions for filing your comments electronically.

How Can I Be Sure That My Comments Were Received?

If you wish Docket Management to notify you upon its receipt of your comments, enclose a self-addressed, stamped postcard in the envelope containing your comments. Upon receiving your comments, Docket Management will return the postcard by mail.

How Do I Submit Confidential Business Information?

If you wish to submit any information under a claim of confidentiality, you should submit three copies of your complete submission, including the information you claim to be confidential business information, to the Chief Counsel, NHTSA, at the address given above under **FOR FURTHER INFORMATION CONTACT.** In addition, you should submit two copies, from which you have deleted the claimed confidential business information, to Docket Management at the address given above under **ADDRESSES.** When you send a comment containing information claimed to be confidential business information, you should include a cover letter setting forth the information specified in our confidential business information regulation. (49 CFR part 512.)

Will the Agency Consider Late Comments?

We will consider all comments that Docket Management receives before the close of business on the comment closing date indicated above under **DATES**. To the extent possible, we will also consider comments that Docket Management receives after that date.

How Can I Read the Comments Submitted by Other People?

You may read the comments received by Docket Management at the address given above under **ADDRESSES.** The hours of the Docket are indicated above in the same location.

You may also see the comments on the Internet. To read the comments on the Internet, take the following steps:

(1) Go to the Docket Management System (DMS) Web page of the Department of Transportation (http://dms.dot.gov/).

(2) On that page, click on ''search.''

(3) On the next page (http://dms.dot.gov/search/), type in the four-digit docket number shown at the beginning of this document. Example: If the docket number were ''NHTSA–1998–1234,'' you would type ''1234.'' After typing the docket number, click on ''search.''

(4) On the next page, which contains docket summary information for the docket you selected, click on the desired comments. You may download the comments. However, since the comments are imaged documents, instead of word processing documents, the ''pdf'' versions of the documents are word searchable.

Please note that even after the comment closing date, we will continue to file relevant information in the Docket as it becomes available. Further, some people may submit late comments. Accordingly, we recommend that you periodically check the Docket for new material.

William H. Walsh,

Associate Administrator for Plans and Policy.

[FR Doc. 01–16684 Filed 7–2–01; 8:45 am]

BILLING CODE 4910–59–P

DEPARTMENT OF TRANSPORTATION

National Highway Traffic Safety Administration

49 CFR Part 575

[Docket No. NHTSA–2001–9663]

Consumer Information Regulations; Federal Motor Vehicle Safety Standards; Rollover Resistance

AGENCY: National Highway Traffic Safety Administration (NHTSA), DOT.

ACTION: Request for comments.

SUMMARY: This notice announces NHTSA's plans to evaluate a number of driving maneuver tests for rollover resistance in accordance with the requirements of the TREAD Act. The agency will develop a dynamic test on rollovers of light motor vehicles for a consumer information program, and seeks comments on the subject of dynamic rollover testing and our approach to developing meaningful consumer information.

DATES: *Comment Date:* Comments must be received by August 17, 2001.

ADDRESSES: All comments should refer to Docket No. NHTSA–2001–9663 and be submitted to: Docket Management, Room PL–401, 400 Seventh Street, SW, Washington, D.C. 20590. Docket hours are 10 a.m. to 5 p.m. Monday through Friday.

For public comments and other information related to previous notices on this subject, please refer to DOT Docket Nos. NHTSA–2000–6859 and 8298 also available on the web at *http://dms.gov/search*, and NHTSA Docket No. 91–68; Notice 3, NHTSA Docket, Room 5111, 400 Seventh Street, SW, Washington, DC 20590. The NHTSA Docket hours are from 9:30 am to 4 pm Monday through Friday.

FOR FURTHER INFORMATION CONTACT: For technical questions you may contact Patrick Boyd, NPS–23, Office of Safety Performance Standards, National Highway Traffic Safety Administration, 400 Seventh Street, SW, Washington, DC 20590. Mr. Boyd can be reached by phone at (202) 366–6346 or by facsimile at (202) 493–2739.

SUPPLEMENTARY INFORMATION:

I. Safety Problem.

II. Background.
III. Preparatory Activity.
IV. Difficulties Common to Various Dynamic Rollover Tests Using Driving Maneuvers.
V. Path-Following Driving Maneuver Tests.
A. CU Double Lane Change.
B. VDA Double Lane Change.
C. Open-Loop Pseudo-Double Lane Change.
D. Path-Corrected Limit Lane Change.
VI. Open Loop Fishhook Maneuvers—Defined Steering Tests.
VII. Dynamic Tests Other Than Driving Maneuvers.
A. Centrifuge Test.
B. Driving Maneuver Simulation.
VIII. Solicitation of Comments.
IX. Rulemaking Analyses and Notices.
X. Submission of Comments.

I. Safety Problem

Rollover crashes are complex events that reflect the interaction of driver, road, vehicle, and environmental factors. We can describe the relationship between these factors and the risk of rollover using information from the agency's crash data programs. We limit our discussion here to light vehicles, which consist of (1) passenger cars and (2) multipurpose passenger vehicles and trucks under 4,536 kilograms (10,000 pounds) gross vehicle weight rating.[1]

According to the 1999 Fatality Analysis Reporting System (FARS), 10,140 people were killed as occupants in light vehicle rollover crashes, including 8,345 killed in single-vehicle rollover crashes. Eighty percent of the people who died in single-vehicle rollover crashes were not using a seat belt, and 64 percent were partially or completely ejected from the vehicle (including 53 percent who were completely ejected). FARS shows that 55 percent of light vehicle occupant fatalities in single-vehicle crashes involved a rollover event. The proportion differs greatly by vehicle type: 46 percent of passenger car occupant fatalities in single-vehicle crashes involved a rollover event, compared to 63 percent for pickup trucks, 60 percent for vans, and 78 percent for sport utility vehicles (SUVs).

Using data from the 1995–1999 National Automotive Sampling System (NASS) Crashworthiness Data System (CDC), we estimate that 253,000 light vehicles were towed from a police-reported rollover crash each year (on average), and that 27,000 occupants of these vehicles were seriously injured (defined as an Abbreviated Injury Scale (AIS) rating of at least AIS 3).[2] Of these 253,000 light vehicle rollover crashes, 205,000 were the result of a single vehicle crash. (The present rollover resistance ratings estimate the risk of rollover if a vehicle is involved in a single vehicle crash.) Sixty-five percent of those people who suffered a serious injury in single-vehicle tow-away rollover crashes were not using a safety belt, and 50 percent were partially or completely ejected (including 41 percent who were completely ejected). Estimates from NASS-CDC indicate that 81 percent of tow-away rollovers occurred in single-vehicle crashes, and that 87 percent (178,000) of the single-vehicle rollover crashes occurred after the vehicle left the roadway. An audit of 1992–96 NASS-CDC data showed that about 95 percent of rollovers in single vehicle crashes were tripped by mechanisms such as curbs, soft soil, pot holes, guard rails, and wheel rims digging into the pavement, rather than by tire/road interface friction as in the case of untripped rollover events.

According to the 1995–1999 NASS-General Estimates System (GES) data, 57,000 occupants annually received injuries rated as K or A on the police KABCO injury scale in rollover crashes. (The police KABCO scale calls ''A'' injuries ''incapacitating,'' but their actual severity depends on local reporting practice. An ''incapacitating'' injury may mean that the injury was visible to the reporting officer or that the officer called for medical assistance. A ''K'' injury is fatal.) The data indicate that 205,000 single-vehicle rollover crashes resulted in 46,000 K or A injuries. Fifty-four percent of those with K or A injury in single-vehicle rollover crashes were not using a seat belt, and 20 percent were partially or completely ejected from the vehicle (including 18 percent who were completely ejected). Estimates from NASS-GES indicate that 16 percent of light vehicles in police-reported single-vehicle crashes rolled over. The estimated risk of rollover differs by light vehicle type: 13 percent of cars and 14 percent of vans in police-reported single-vehicle crashes rolled over, compared to 24 percent of pickup trucks and 32 percent of SUVs. The percent of all police reported crashes for each vehicle type that resulted in rollover was 1.6 percent for cars, 2.0 percent for vans, 3.7 percent for pickup trucks and 5.1 percent for SUVs as estimated by NASS-GES.

II. Background

In a June 1, 2000 notice (65 FR 34998), NHTSA announced its intention to include consumer information ratings for rollover resistance of passenger cars and light trucks in its New Car Assessment Program (NCAP). NCAP has provided comparative consumer information on vehicle performance in frontal and side impact crashes for many years. About 22 percent of passenger car occupants killed in crashes are killed in rollover crashes, as compared with more than 70 percent killed in frontal and side crashes combined. In the case of light trucks, however, about as many occupants are killed in rollover crashes as in frontal and side crashes combined. NHTSA proposed a rating system based on the Static Stability Factor (SSF) which is the ratio of one half the track width to the center of gravity height.

SSF was chosen over vehicle maneuver tests because it represents the first order factors that determine vehicle rollover resistance in the 95 percent of rollovers that are tripped. Driving maneuver tests represent on-road untripped rollover crashes which are about 5 percent of the total. Other reasons for selecting the SSF measure are: driving maneuver test results are greatly influenced by SSF; the SSF is highly correlated with actual crash statistics; it can be measured accurately and explained to consumers; and changes in vehicle design to improve SSF are unlikely to degrade other safety attributes.

The industry comments to the June 2000 notice were that SSF was too simple because it did not include the effects of suspension deflections, tire traction and electronic stability control (ESC) and that the influence of vehicle factors on rollover risk was so slight that vehicles should not be rated for rollover resistance. In the conference report dated October 23, 2000 of the FY2001 DOT Appropriation Act, Congress permitted NHTSA to move forward with the rollover rating proposal and directed the agency to fund a National Academy of Sciences' study on vehicle rollover ratings. The study topics are ''whether the static stability factor is a scientifically valid measurement that presents practical, useful information to the public including a comparison of the static stability factor test versus a test with rollover metrics based on dynamic driving conditions that may induce rollover events.''

The Consumers Union (CU) commented to the June 2000 notice that although SSF is a useful predictor of tripped rollover, it should be used in

[1] For brevity, we use the term ''light trucks'' in this document to refer to vans, minivans, sport utility vehicles (SUVs) and pickup trucks, under 4,536 kilograms (10,000 pounds) gross vehicle weight rating. NHTSA has also used the term ''LTVs'' to refer to the same vehicles.

[2] A broken hip is an example of an AIS 3 injury.

conjunction with a dynamic stability test using vehicle maneuvers to better predict the risk of untripped rollovers. CU also believes that NHTSA underestimated the incidence of on-road untripped rollover by relying upon 1992–1996 data.

Section 12 of the ''Transportation Recall, Enhancement, Accountability and Documentation (TREAD) Act of November 2000'' reflects CU's concern. It directs the Secretary to ''develop a dynamic test on rollovers by motor vehicles for a consumer information program; and carry out a program conducting such tests. As the Secretary develops a [rollover] test, the Secretary shall conduct a rulemaking to determine how best to disseminate test results to the public.'' The rulemaking and test program must be carried out by November 1, 2002. This notice is part of NHTSA's work to satisfy the requirements of Section 12 of the TREAD Act.

NHTSA responded to these and other technical comments to the June 2000 notice in a January 12, 2001 notice (66 FR 3388) and announced the agency's decision to use the SSF as a measure, along with publishing the initial rollover resistance ratings. As of April 2001, the agency has added the rollover resistance ratings of 104 vehicles to the frontal and side crash ratings given by NCAP (see *www.nhtsa.dot.gov/hot/rollover/* for ratings, vehicle details and explanatory information).

NHTSA awarded a grant to the National Academy of Sciences for its study of vehicle rollover ratings on December 15, 2000 and its first public meeting on the subject took place on April 11 and 12, 2001. A second open meeting will allow for consideration of alternatives to SSF for rating vehicles, and presentations on consumer information and risk communication. At a closed meeting the NAS committee will finalize its draft report. The study will conclude with the required report to Congress.

III. Preparatory Activity

In response to the TREAD Act, NHTSA met with the Alliance of Automobile Manufacturers, Nissan, Toyota, Ford, Consumers Union (CU), Automotive Testing, Inc. (an independent test lab), MTS Systems Corp., the University of Michigan Transportation Research Institute (UMTRI), Daimler-Chrysler, BMW, Volkswagen and Volvo to gather information on possible approaches for dynamic rollover tests. These parties made specific suggestions about approaches to dynamic testing of vehicle rollover resistance. In addition, recent NHTSA research summarized in the report entitled ''An Experimental Examination of Selected Maneuvers That May Induce On-Road Untripped, Light Vehicle Rollover—Phase II of NHTSA's 1997–1998 Vehicle Rollover Research Program'' [3] is relevant to the development of a dynamic rollover test suitable for inclusion in our consumer information program.

This notice identifies a variety of dynamic rollover tests that we have chosen to evaluate in our research program and what we believe to be their potential advantages and disadvantages. It also discusses other possible approaches we considered but decided not to pursue. Table 1 summarizes the advantages and disadvantages we anticipate for the various approaches prior to research which will increase our understanding. We invite public comment on our decisions, on our observations and on the general subject of rollover resistance testing for consumer information.

Track testing using the maneuvers discussed in this notice began in April 2001 at NHTSA's Vehicle Research and Test Center in East Liberty, Ohio. We intend to publish a second notice in early 2002 presenting a tentative dynamic rollover test procedure chosen on the basis of this research and the comments to today's notice. We will review the comments to today's notice expeditiously and may revise the test development research based on the comments. A final notice responding to the comments to the second notice, presenting the final dynamic rollover test procedure, and containing an initial set of rollover resistance ratings will be published in October 2002.

The test vehicles chosen for the evaluation of potential maneuver tests are the 2001 Ford Escape (without electronic stability control (ESC [4])), the 2001 Chevrolet Blazer (without ESC), the 2001 Toyota 4Runner (with and without ESC enabled) and the 1999 Mercedes ML–320 (with and without ESC enabled). They represent the significant range of static stability factors that characterize today's SUVs. They also include two ESC systems with possible differences in operation. The vehicles will be tested in a base load configuration with driver, instruments and outriggers, in a second configuration with a roof load to reduce SSF by .05, and in other load configurations intended to influence handling. The loads will be positioned so as to change one coordinate of the c.g. location without influencing the other two. For example, in the second load configuration, about 200 pounds will be secured to the roof in a position that maintains the fore-aft and side-to-side location of the c.g. but raises it enough to cause a reduction of 0.05 in the SSF (while also increasing the vehicle's mass moments of inertia).

The test vehicles will be equipped with special wheel force sensors at each wheel during some of the evaluation of potential maneuver tests. They will provide better information for our evaluation of how these vehicles react to different characteristics of the candidate test maneuvers. Wheel force measurements will determine absolutely when two wheel lift occurs. Also, they will allow us to measure the degree of load transfer during runs that do not cause wheel lift, a capability not possible in our previous research. The sensors also can reveal possible interactions between vertical and lateral wheel forces that maneuvers may produce in some vehicles.

IV. Difficulties Common to Various Dynamic Rollover Tests Using Driving Maneuvers

We considered some methods of dynamic testing for rollover resistance that did not use driving maneuvers, but decided to concentrate our research on driving maneuver tests for the reasons discussed in Section VII. However, driving maneuver tests share some significant difficulties in comparison to laboratory tests. Since they directly represent a deadly type of crash, the safety of test drivers will always be a concern, even though drivers will be belted and outriggers will be used in most circumstances. Outriggers are the usual means of minimizing the chance of an actual rollover crash during a test, but they also introduce problems. If an outrigger digs into the pavement, it can cause the vehicle to ''pole vault'' resulting in an even worse rollover crash. The weight of the outrigger(s) may change the vehicle's c.g. location and will increase its mass moments of inertia, placing restraints on the natural desire to overdesign the outriggers for safety. The mounting of the outrigger can also influence vehicle handling by changing its structural stiffness. We will choose outriggers designed to the best contemporary practices and evaluate their effect on maneuver test results.

Maneuver tests are expensive. Besides the labor involved in performing the maneuvers and interpreting the results,

[3] Available at http://www-nrd.nhtsa.dot.gov/vrtc/ca/rollover.htm.

[4] ESC is a safety system that can apply the brake at one or more wheels automatically to keep the yaw rate of the vehicle proportional to its speed and lateral acceleration. For example, braking the outside front wheel can correct the heading of a vehicle beginning to oversteer (spin out).

the test methods require that each test vehicle be custom fitted with costly precision instruments, onboard computers, probably an array of special steering and braking controls, and possibly telemetry. The wheel force transducers included in these developmental tests are not expected to be necessary for routine tests in a consumer information program, but there may be a need for less intrusive means of load transfer monitoring. Frequent tire changes, adding to cost and labor, are necessary in maneuver tests because tire shoulder wear can significantly influence force generation. Part of this research will define the need for tire changes in the selected maneuver in routine consumer information testing. Finally, damage to the vehicles as a result of the tests or the installation of equipment is a cost factor.

The use of driving maneuver tests to rate rollover resistance presents some questions beyond test methodology, danger and expense. A high statistical correlation based on a large sample of police reports of rollover crashes was possible for the present ratings based on SSF because SSF is a good predictor of tripped rollovers, in particular, and the preponderance of rollovers in state crash reports are tripped. As part of NHTSA' s dynamic maneuver test program in 1997 and 1998, we tried to correlate the performance of the test vehicles on various maneuvers to their rates of on-road untripped rollover crashes. We found that it is not possible to obtain sufficient data, even on high volume vehicles, to determine a correlation between maneuver test outcome and untripped rollover involvement. The only data base we are aware of that contains data identifying untripped rollover crashes is NHTSA's NASS–CDS. However, only about 4300 crashes of all types (frontal, side, rear and rollover) are researched in depth each year for inclusion in this data base and only about ten of those cases are untripped rollovers.[5] The NASS–CDS data base is usually used with weighting factors for different types of crashes to represent national trends. However, the number of observations is too small to support make/model correlations between maneuver test results and real-world untripped rollover rates.

Some of the 17 states in NHTSA's State Data System (SDS) data base[6] attempt to distinguish between on-road and off-road rollover crashes. While it seems inviting to use on-road rollover as a surrogate for untripped rollover, this is not strictly accurate. Most on-road rollovers occur when the vehicle is tripped by road surface irregularities or the wheel rim digging into the pavement.[7] Also, police may code a rollover crash as ''on-road'' because the vehicle was found at rest on the roadway. The designation ''on-road'' does not necessarily mean that the roll initiation occurred on the roadway.

The correlation, by make/model, of performance in a maneuver test to the rate of *all* rollovers would be highly dependent on the degree to which good performance in the driving maneuver test is the result of low c.g. height, large track width and other factors which also increase resistance to tripped rollovers. Optimization of tire properties and ESC operation for a particular maneuver test would likely decrease this level of correlation over time if effective ways of improving test performance are developed that do not improve the tripped rollover resistance of vehicles. Therefore, it is unlikely that the choice of any particular maneuver test or tests can be justified on the basis of the correlation of the test results to real-world rollover rates. This situation makes the resemblance of the chosen maneuver test or tests to documented crash scenarios even more important.

Ratings based on driving maneuvers may be complex and hard to communicate to the public because the usual rollover criterion of two wheel lift can be at odds with the handling capability of the vehicle. In a path following maneuver, the test is terminated when the vehicle can no longer follow the path. For example, consider a vehicle that cannot negotiate the path beyond 38 mph, but it departs the path before it achieves two wheel lift. Consider a second vehicle that can follow the path at 45 mph but lifts the inside tires three inches off the pavement. Which vehicle should be rated higher? Departing the roadway, as the first vehicle would seem likely to do more often than the second vehicle, can expose a vehicle to a high risk of tripped rollover.

ESC was originally designed to keep the vehicle headed in the direction desired by the driver rather than to plow-out (understeer) or to spin-out (oversteer) in a limit cornering situation by using one or more brakes to help turn the vehicle to the correct heading. ESC cannot increase the maximum traction, and consequently prevent a vehicle from leaving the road, if the vehicle is going too fast. ESC may help drivers regain control rather than overreact in situations like an abrupt ''road-edge recovery'' where there is sufficient traction to recover. In this way, ESC has the potential to reduce the number of single vehicle crashes that turn into tripped rollovers. However, ESC can be programmed to work in many other ways. In one way, it can apply the brakes automatically to slow the vehicle at a selected value of lateral acceleration or at a similar criterion. While this is a plausible safety strategy, it has the potential to overwhelm the other aspects of vehicle behavior measured in a maneuver test. In most maneuver tests, the vehicle is steered through the maneuver while coasting because any attempt to keep a steady throttle position tends to make the tests less repeatable. Even in a short maneuver, the vehicle scrubs off some speed. For example, a vehicle entering a short maneuver coasting at 50 mph is likely to exit at 45 mph or less. However, with braking intervention programed into the ESC, a vehicle could easily slow to 25 mph during the test. While both vehicles would be rated on their entry speed, the ESC vehicle may be going much slower at the critical part of the maneuver. It is possible that maneuver tests could simply result in segregating vehicles with automatic brake intervention from those without it. Automatic brake intervention may produce some safety benefits. NHTSA believes, however, that the vast majority of drivers also apply the brakes in difficult situations, regardless of whether the vehicle has automatic brake intervention. Thus, a maneuver test conducted while coasting could reward this type of ESC design excessively. NHTSA expects that most drivers would brake during similar maneuvers, and that automatic brake intervention would make less difference in real driving than during tests in which drivers are not permitted to brake.

Important environmental conditions also will influence the results of any driving maneuver test for rollover ratings. The pavement friction of even a dedicated test area does not remain constant. There is a cycle of polishing and weathering during periods of use and disuse, and a possible temperature effect on pavement friction. The usual method of determining pavement friction is a locked wheel braking test conducted at a constant 40 mph using

[5] 1998–1999 NASS–CDS annual averages.

[6] A collection of data from the police accident reports (PARs) of 17 participating states. This data is limited to what was recorded by the responding officer(s) at the time of the crash.

[7] ''Analysis of Untripped Rollovers''; Calspan Corporation for American Automobile Manufacturer's Association and Association of International Automobile Manufacturers; May 15, 1998, and ''NASS Rollover Study Evaluation Report''; NHTSA National Center for Statistics and Analysis; August 1998.

a ''skid trailer'' with a water nozzle to wet the surface immediately ahead of the skidding tire. The pavement friction coefficient generated by this test is called the ''skid number''. General Motors has reported that moderate differences in skid number, even when measured without pavement wetting, do not correspond well to differences in lateral force generated by vehicles on different pavements. Our planned test program includes hot weather and cold weather testing as well as tests conducted on different surfaces at three to date undetermined test facilities. The result we hope for is a definition of a minimum friction level for a valid test as tracked by tests using a control vehicle.

Not every vehicle is tested each year in the new car assessment program. The results for vehicles without substantial changes tested in previous years are carried over to represent vehicles of the current model year. The test results, and the resulting rollover ratings, from the previous year might not be comparable to the new year's results if there were significant differences in pavement friction.

V. Path-Following Driving Maneuver Tests

The driving maneuver tests for rollover resistance that have received the most publicity over the years are the ''emergency double lane change'' of Consumer Reports magazine and the European ''moose test.'' The first test was the basis of criticism by Consumer Reports that the 1988 Suzuki Samurai and the 1996 Isuzu Trooper were ''not acceptable.'' The ''moose test'' was used by a European auto magazine to demonstrate that the 1998 Mercedes-Benz A Class minicar could experience on-road untripped rollover in a similar maneuver. We classify both tests as path following tests to distinguish them from another type of maneuver tests in which explicit steering inputs are required without reference to the path they cause the vehicle to take. We will evaluate both the CU double lane change (CU is the publisher of Consumer Reports) and a version of the moose test recommended by Daimler-Chrysler. We will also evaluate the use of mathematical path correction and an automated steering controller [8] to improve these driving maneuver tests.

A. CU Double Lane Change

The CU double lane change short course (figure 1) was developed in order to replicate an unintentional rollover experienced by a Consumer Reports staff member driving a Suzuki Samurai. It consists of a 70-foot-long, 8-foot-wide entrance lane that is centered in a 12-foot-wide first (right) lane, a 50-foot-long area to make the first lane change (to the left), a set of gate cones at this 50-foot mark that are 12 feet apart (with the right cone three feet into the left lane), a 60-foot-long area to make the second lane change back to the right lane, and a 12-foot-wide exit lane. The test driver steers the vehicle through the course at successively higher entry speeds until the vehicle either plows out, spins out, or tips up. The vehicle is coasting through the maneuver. The driver does not apply the brakes, and driver releases the throttle 35 feet into the 70 foot entrance lane.

An advantage of the CU double lane change is its face validity, that is, drivers can imagine a situation in which they may try to make a similar maneuver. However, NHTSA believes that there are good arguments that simply braking without steering or braking and steering with an ABS equipped vehicle are better strategies to avoid the hypothetical object in the road that is the basis of the CU test. In addition, it is hard to find actual crashes that resemble the test. Nevertheless, driving through a tight double lane change without wheel lift is probably a good representation of what the public expects of a personal vehicle.

An important part of the double lane change is the immediate steering reversal necessary to get back in the right lane after steering sharply into the left lane to avoid the hypothetical object in the roadway. This steering reversal allows the energy stored in the suspension springs during the left steer and the roll momentum of the sprung mass when that energy is released at the steering reversal to add to the load transfer caused by the sharp right steer. The dynamics of the steering reversal are not included in SSF, Tilt Table Ratio, or even the J-turn maneuver (see 65 FR 34998 for details about these rollover resistance metrics). So this aspect of the double lane change better represents the dynamics that may result in an untripped rollover.

However, if the only criterion for success in a double lane change maneuver is whether or not two-wheel lift can be made to occur, any vehicle will pass such a test if equipped with tires of sufficiently low traction or with chassis tuning that produces the same effect. In this case, the vehicle will simply run off the desired path at a speed and lateral acceleration too low to produce two-wheel lift. On the other hand, an inherent advantage of path-following maneuvers like the double lane change is that the maximum speed through the maneuver can be used as part of the vehicle score to reward good handling and avoid creating a rollover resistance rating with incentives for reduced handling and braking performance. Like all the driving maneuvers we are considering, the CU double lane change also has the advantage of displaying the operation of electronic stability control systems.

The foremost disadvantage of the CU double lane change is that differences in driving style can strongly influence the test results. The time history of the steering wheel angle may vary considerably for runs of the same vehicle at the same speed (figure 2). Tests in which the driver starts the steering movements earlier seem to produce a moderately smaller initial left steer and a much smaller amount of right steer after passing through the offset gate. The steering reversal (from maximum left steer to maximum right steer) can vary significantly at the same test speed, and the runs with a greater steering reversal appear more likely to produce two-wheel lift. For example, during CU tests of the Isuzu Trooper, one driver ran the course at 37.5 mph with a left steer of 183 degrees followed by a right steer of 216 degrees (399 degree steering reversal) and did not knock down the course boundary cones or experience two-wheel lift. Another driver ran the same course at 37.5 mph using an initial left steer of 191 degrees followed by a right steer of 388 degrees (579 degree steering reversal) and experienced two-wheel lift.

Another potential disadvantage of the double lane change maneuver is the possibility that the course layout may cause the steering reversal and roll momentum effect to be more critical for some vehicles than for others. The course originally used by Consumer Reports had the offset gate forcing the lane change positioned 60 feet from the end of the entrance lane and also 60 feet from beginning of the exit lane. When the publication tried to replicate its staff member's rollover crash of a Suzuki Samurai, it found that shortening the distance from the end of the entrance lane to the offset gate by 10 feet and moving the offset gate three feet further to the left made two wheel lift of the Samurai more likely. This suggests that tuning of the course to the vehicle may be necessary to create a worst case condition and that a course tuned to one vehicle may not be the worst case for another vehicle to which it is compared.

[8] The automated steering controller was referred to as a ''Programmable Steering Machine'' in our June 1, 2000 notice (65 FR 34998).

B. VDA Double Lane Change

The VDA Double Lane Change is a variant of the ''moose test'' used by a Scandinavian automotive magazine. It was developed by the German Alliance of Automotive Industry (VDA) to minimize the influence of driving style on the original moose test for use as an industry standard rollover and handling test procedure. As a double lane change maneuver, it is identical in concept to the CU test, and it is useful to contrast the two maneuvers.

The method VDA used to minimize driver influence was to reduce the lane and gate widths and tie these parameters to the width of the test vehicle. Using the VDA course (figure 3) for a 70 inch wide vehicle (typical of the most popular SUVs and mid-sized cars) the widths of the entrance lane, offset gate, and exit lane are 7.25 feet, 9.12 feet and 9.9 feet, respectively, compared with 8 feet, 12 feet and 12 feet for the same components of the CU double lane change course. The distance from the end of the entrance lane to the beginning of the offset gate is 44.3 feet rather than 50 feet for the CU test, and the distance from the end of the offset gate to the beginning of the exit lane is only 41 feet, compared to 60 feet for the CU test. There is also a difference in the amount of offset of the left lane gate. In the CU test, the inside of the gate is offset 5 feet to the left of the inside of the entrance lane and 3 feet to the left of the exit lane (because the exit lane is 4 feet wider than the entrance lane). In the VDA test, the left edges of the entrance and exit lanes are in line, and right edge of the offset gate is 3.3 feet to the left.

The fundamental difference between the CU and VDA courses is that while the vehicle has to pass through a gate comprised of two cones marking a 12 foot left lane width in the CU test, it has to traverse a 36-foot-long by 9.12-foot-wide left lane in the VDA test before turning right to re-enter the right lane. The VDA test is more like a single lane change to the left immediately followed by a second single lane change to the right and does not have as sharp a steering reversal as the CU double lane change test. In both tests, the vehicle begins to coast about 35 feet before the end of the entrance lane.

The VDA double lane change shares with the CU test the advantage of face validity, but the VDA test would appear to be less subject to variability in driving style. It also uses a rating criteria that implicitly rewards good handling. It is scored by the maximum entry speed of the vehicle's clean runs along with a notation of the limiting event: understeer, oversteer or two-wheel lift. Like all the other maneuver tests we are considering, it has the advantage of displaying the operation of ESC systems, but the entry speed criteria may disproportionately favor ESC systems with simple brake intervention.

Efforts to reduce driver variability may also introduce problems. The least serious problem is that narrow lanes may make the course so hard to follow that imprecise driving rather than actual oversteer or understeer may cause collisions with the course marking cones. Daimler-Chrysler reports that expert drivers can negotiate the course at about 4 mph faster than average drivers. It is unclear whether this is due to expert steering strategy optimizing the vehicle path for lower peak lateral acceleration even within the reduced boundaries or simply to better ability to judge cone position and control vehicle position. If this problem exists, simply allowing the driver more tries at a given speed may be all that is necessary to determine whether vehicle handling is really the limiting factor.

The more serious potential problem is the use of a 36 foot long left lane, rather than just a gate to drive around. It potentially removes the roll momentum effect associated with the sharp steering reversals. While this effect increases the variability of CU test results due to differences in driving style, it also reveals rollover propensities that would not likely show up in a test like the J-turn.

Assuming that the VDA double lane change does not suppress the potential effects of unfavorable roll momentum, it also shares the question of steering reversal timing with the CU test. Namely, does the course layout present a worst case timing in which roll momentum reinforces the side to side load transfer at peak lateral acceleration for some vehicles but not for others?

C. Open-Loop Pseudo-Double Lane Change

In its 1997–1998 rollover research, NHTSA made use of an automated steering controller to achieve highly repeatable J-turn and fish hook maneuvers. As discussed above, the potential problems of double lane change tests are the lack of repeatability caused by variations in driving style and the possibility that a course producing worst case roll momentum for one vehicle may not do so for the next vehicle. We will attempt to solve these problems by using the steering controller in a non-path following maneuver approximating a double lane change.

The idea is to use steering rates and magnitudes typical of driver-controlled CU tests, but to use the automated controller for repeatability. Separate circular path tests of each vehicle would be done to relate lateral acceleration to steering angle in the linear range. This information would be used to tailor the steering angles for the pseudo-double lane change to the steering ratio and wheelbase of each test vehicle. The steering controller would also tailor the course for the worst case roll momentum for each vehicle. Body roll rate feedback would be used to time the first steering reversal left to right and also the second steering reversal right to straight ahead.

This is not a maneuver established in literature or in practice. It is little more than a concept now. Its potential drawback is that the maneuver may stray too far from an actual double lane change to retain any face validity. Also, it is unclear if the advantage of a simple speed and limit circumstance score would remain applicable to a double lane change performed in this manner.

D. Path-Corrected Limit Lane Change

From a vehicle manufacturer's prospective, the double lane change maneuver is a good test to evaluate a vehicle's limit handling behavior, because it is a realistic maneuver and it allows engineers to simultaneously evaluate the three main behaviors that affect limit handling safety (responsiveness, lateral stability and rollover resistance). However, lane changes are driver-dependent (meaning vehicle performance is heavily influenced by how the driver drives the vehicle) and their rating scales are usually subjective (meaning based on driver expert evaluation rather than on measured data). To solve this problem, Ford Motor Company has developed Path-Corrected Limit Lane Change (PCLLC). It is claimed to be a driver-independent, objective way to run limit handling lane changes. First, vehicles are run through a series of maneuvers much like the CU double lane change except that a range of course lengths and degrees of lane offsets are used to measure their responses to steering inputs in a range of frequencies. The data is then normalized mathematically to show how each of those vehicles would have performed had they followed precisely the same paths in the lane change. This is what ''Path-Correction'' means, and this normalization reduces the driver influence in the maneuver.

PCLLC is a proprietary technique, and the details have not been reported publicly by Ford. Ford is allowing

NHTSA to evaluate this technique under a confidentiality agreement. NHTSA will run Ford's specified suite of vehicle characterization tests using its own vehicles and test track with Ford's assistance in instrumenting the vehicles for the measurements required for the mathematical path corrections. Ford will explain the theory of the mathematical corrections to NHTSA, and perform the corrections on NHTSA's vehicle test data in a confidential report. If NHTSA decides to propose this technique as the best way of accomplishing the dynamic rollover tests required by the TREAD Act, it expects that Ford will release it from the confidentiality agreement so that the test procedure can be proposed in detail in our next notice early in 2002.

We view PCLLC as a mathematical technique which allows the construction of ''perfect test runs'' for an objective comparison of vehicles from a suite of similar test runs which expose each vehicle to a range of speeds, steering frequencies, rates and amplitudes. It looks like a good approach to overcoming the disadvantages discussed earlier for the more conventional driver controlled lane change maneuver tests. Driving style variability would clearly be eliminated, and it appears that this technique can construct a number of standard paths to examine the question of how many courses are necessary for a fair evaluation of the roll momentum effect for vehicles with different properties.

NHTSA has envisioned that PCLLC could be used as a way of producing the equivalent of a CU double lane change test with every vehicle following exactly the same geometric path up to the point that it either has two-wheel lift or can no longer maintain the prescribed path as a result of limit understeer or oversteer. Under this idea, the rating criteria could be speed and the limiting circumstance (plow, spin or two wheel lift) as with the Daimler-Chrysler recommendation, with the possibility of greater rating complexity if more than one test course were required.

However, it is not clear whether the PCLLC technique can be used this way and whether this would be the best way to use it. Ford is looking at many different vehicle handling metrics and cited three examples. *Responsiveness* could be represented by a delay time from steering input to yaw response evaluated on a path corrected to the same time history of yaw angle for each vehicle. *Lateral stability* could be characterized by rear tire slip angle on a path corrected to equal lateral acceleration for each vehicle. *Untripped rollover resistance* could be characterized by the degree of side to side load transfer evaluated on a path representing the maximum lateral acceleration capacity of the vehicle (considering such factors as practical limits on steering angle and rate and limit oversteer). Since the vehicle characterization runs are performed with ESC operating, the results should reflect its influence in the same way as other driving maneuver tests.

VI. Open Loop Fishhook Maneuvers—Defined Steering Tests

The fishhook maneuver was originally developed by Toyota Motor Corporation as a maneuver with a strong roll momentum effect and a simple steering regime that would be fairly repeatable by test drivers. The maneuver requires the driver to steer as quickly as possible 270 degrees of steering wheel angle, and then to steer 870 degrees in the opposite direction as quickly as possible (figure 4). At less than limit speed runs, the vehicle's path resembles a fishhook shape (figure 5), but the actual path is immaterial to the scoring. The maneuver is repeated in each direction of initial steering and at increasing speed until two-wheel lift or loss of control occurs, or until preset maximum speed for test driver safety is reached. Toyota also added pulse braking [9] to make the maneuver more likely to induce two-wheel lift if the vehicle under test would not lift wheels without braking. The lateral acceleration at two-wheel lift (LAR) is Toyota's figure of merit for this maneuver.

NHTSA's 1997–98 research program made use of two variations on the Toyota ''fishhook'' maneuver theme. Since these tests are described by the steering input without regard for different paths taken by different vehicles, they are considered ''open-loop''. They were also perfect candidates for NHTSA's goal of using an automated steering controller for precise repeatability for maximum objectivity. NHTSA's tests did not use pulse braking because we were concerned that pulse braking tests were not merely a more stringent level of the basic fishhook, but a test of different vehicle dynamics. In one version, the steering rate was set at 750 degrees per second for all vehicles and the dwell time [10] between steering reversals was ''tuned'' for each vehicle to resemble half a sine wave at what we thought was the roll natural frequency of each vehicle. In the other variation, we attempted to represent a road edge recovery maneuver by setting the initial steer angle to 7.5 degrees of the road wheels (to represent the front tire slip angle possible when a vehicle mounts a four inch pavement height above the road shoulder), using a constant 0.5 second dwell time and a more moderate steering rate of 500 steering wheel degrees per second. The first maneuver was generally more severe than the second. It was configured to represent a steering frequency of 0.5 Hz, which was the roll natural frequency assumed for most vehicles because our attempts at measuring roll natural frequency were thwarted by vehicle suspension damping. However, some of the vehicles responded with greater load transfer to the seemingly gentler ''road-edge recovery'' fishhook which used a different steering frequency. This suggests the possible importance of roll momentum timing.

Open loop fishhook maneuver tests are like the mirror image of the double lane change tests because their principle advantages and disadvantages are reversed. Aided by a steering controller, driving style differences are absolutely eliminated. These maneuvers also present the best possibility for tuning the maneuver to the roll characteristics of each test vehicle, thereby eliminating the suspicion that the steering frequency of a fixed double lane change makes the test inherently more stringent for some vehicles than others. However, the fishhook maneuver has much less face validity than the double lane change maneuver. Even the ''road edge recovery'' version of the fishhook does not look, to a ordinary driver, like a maneuver he or she would ever be called upon to make.

There is another disadvantage to open loop tests. Because the vehicle path does not matter, two-wheel lift can be prevented simply by using tires of sufficiently low traction or chassis tuning that produces the same effect. Unless an open loop test is accompanied by other tests of specific handling properties, it could have the perverse effect of encouraging manufacturers to sacrifice handling and braking to make superficial refinements to improve a rollover rating. Also, improvements in a rollover rating gained by special original equipment tire properties may be negated when the tires are replaced later in the life of the vehicle.

NHTSA will evaluate three types of fishhook maneuvers. In one maneuver the counter steer will be limited to about 500 to 600 degrees, rather than

[9] Pulse braking is a short hard brake application that creates a transient increase in lateral acceleration upon release.

[10] Dwell time is the short time internval of less than one second between the initial steering angle (shown as negative angle in Figure 4) and larger steering movement in the reverse direction.

870, because the large countersteer is thought to scrub off so much speed that it reduces the severity of the maneuver. Also, instead of a fixed 270 degree initial steer, a steering wheel angle derived from the steering angle causing a fixed lateral acceleration, in the linear range, will be chosen to put vehicles with differences in steering gear ratio and wheelbase on an equal footing. A fixed steering rate of 720 degrees per second and a fixed time from the beginning of steering to its return to zero angle during countersteer will be used.

In the second fishhook, the timing of the steering reversal will be based on roll rate feedback. The worse case roll momentum effect is expected when the start of the steering reversal coincides with the instant of maximum roll angle resulting from the first steer. We expect to use an approximate zero reading of a roll rate sensor to indicate maximum roll angle and trigger the countersteer by the automatic steering controller.

The third variation will use a counter steer timing technique suggested by Nissan (figure 6). In this method, the first part of the fishhook is studied separately prior to the fishhook test maneuvers in order to define the worst case dwell time. This is done by running a step steer maneuver (the same as a J turn) at the same steering rate and maximum angle as the first steering movement of the fishhook. The roll rate is measured to determine the time of the maximum roll angle of the second oscillation. Nissan believes that the most severe fishhook for each vehicle is the one in which the lateral acceleration zero crossing during countersteering in the fishhook occurs at the second oscillation peak time as measured in the J turn maneuver. The dwell time from initial steer to countersteer would be adjusted accordingly. The theoretical basis for Nissan's observation on fishhook severity is not obvious. Nissan's belief is based on experimental studies during which dwell time was varied. Its technique appears to produce a countersteer timing similar to that produced by roll rate feedback.

As mentioned above, fishhook tests contain no inherent disincentives for rollover resistance strategies that sacrifice handling. NHTSA is considering adding some objective measure of handling ability to any fishhook test used for consumer information. We are considering a steering response time test possibly based on a J-turn (step steer) and a maximum lateral acceleration test based on either a constant steer input with slowly increasing speed regime or a constant speed with slowly increasing steer regime. We are concerned, however, that even this limited NHTSA definition of handling may produce undesirable trade-offs of less measurable aspects of vehicle handling when manufacturers design to the test. We are particularly interested in comments on how likely it is that vehicle manufacturers would make such trade-offs to ''beat'' the test.

VII. Dynamic Tests Other Than Driving Maneuvers

NHTSA also considered two dynamic tests that did not involve driving maneuvers, namely the centrifuge test and driving maneuver simulation using computational models. Both of these tests have the major benefit of being independent of pavement friction, whereas the problem of pavement friction variation is perhaps the most vexing issue common to all the driving maneuver tests discussed above. However, we decided not to include these tests in our research plan under TREAD for the reasons explained below.

A. Centrifuge Test

The test device for the centrifuge test is similar in concept to a merry-go-round. A person seated at the edge of the merry-go-round feels a lateral force pushing him or her away from the spinning surface that increases with the rotational speed of the merry-go-round. The centrifuge device test (figure 7) consists of an arm attached to a powered vertical shaft. At the end of the arm is a horizontal platform upon which the test vehicle is parked. As the vertical shaft rotates, the parked vehicle is subjected to a lateral acceleration that can be precisely controlled and measured. The basic measurement is the lateral acceleration at which the parked vehicle experiences two-wheel lift. The outside tires are restrained by a low curb so the measurement is independent of surface friction, and the vehicle is tethered to prevent excessive wheel lift. This test method was suggested by the University of Michigan Transportation Research Institute (UMTRI) both in comments to our notice about the present rollover resistance ratings and more recently in the context of the TREAD Act. The test method is directed primarily at tripped rollover, which UMTRI noted accounts for all but a small percentage of rollovers.

The centrifuge test has many advantages. It can produce measurements which are accurate, repeatable and economical in labor costs. It includes the effects of tire and suspension deflections, and its measurements would be expected to correlate well with the actual rollover rates of vehicles, because those statistics are largely driven by tripped rollovers. The centrifuge test is arguably more accurate than SSF in evaluating tripped rollover resistance because it evaluates the outward c.g. movement as a result of suspension and tire deflections. Its basic measurement of a vehicle, lateral acceleration at two-wheel lift, is roughly 15 percent less than the vehicle's SSF with about a +/−5 percent range to cover extremes in roll stiffness.

Despite these advantages, we did not choose to investigate the centrifuge test under the TREAD Act. Improvements in centrifuge test performance can be made by suspension changes that degrade handling. The best performance in the centrifuge test (and in the closely related but less accurate tilt table test) occurs when the front and rear inside tires lift from the platform at the same time. The tuning of the relative front/rear suspension roll stiffness to accomplish this will cause the vehicle to oversteer more than most manufacturers would otherwise desire. We do not want to tempt manufacturers to make this kind of trade-off. Further, we understood the intention behind TREAD to be that NHTSA should give the American public information on performance in a driving maneuver that would evaluate the performance of new technologies like ESC. The centrifuge test would not do so.

B. Driving Maneuver Simulation

Computational models that simulate test maneuvers are used by vehicle manufacturers to assess handling and rollover performance of vehicle designs prior to building prototypes, and to evaluate the effect of suspension changes in prototypes and production vehicles. They present a potential solution to the safety, repeatability and pavement surface variability of real driving maneuver tests. Unfortunately, simulations now also carry enough disadvantages to disqualify their use for rollover resistance ratings. The various models used by different manufacturers produce different results, especially in simulating limit maneuvers. There is no agreement among manufacturers on a single model sufficient for this purpose. The time and cost of measuring the vehicle properties necessary for a limit maneuver model exceed that of running a real driving maneuver test. Validation testing of a model is necessary and greatly resembles the real tests the model hoped to avoid. Testing of the operation of ESC is problematic because the algorithms are often proprietary at the supplier level and not well known by the vehicle manufacturers. Given these difficulties, NHTSA has concluded that it is extremely unlikely

they could be resolved in time for us to use computer modeling for the information we must provide to the American public beginning in November 2002.

VIII. Solicitation of Comments

NHTSA solicits general and specific comments on the subject of the development of a dynamic test for vehicle rollover resistance. We also wish to bring the following specific questions to the attention of commenters:

1. NHTSA has decided to devote its available time and resources under the TREAD Act to develop a dynamic test for rollover based on driving maneuver tests. Is this the best approach to satisfy the intent of Congress in the time allotted? Are there additional maneuvers that NHTSA should be evaluating? Which maneuver or combination of maneuvers do you believe is the best for rollover rating? Are these other approaches well enough developed and validated that they could be implemented 18 months from now?

2. How should NHTSA address the problem of long term and short term variations in pavement friction in conducting comparative driving maneuver tests of vehicle rollover resistance for a continuing program of consumer information?

3. Some ESC systems presently have two functions. One is yaw stability which uses one or more brakes to keep the vehicle headed in the right direction in a limit maneuver, and the other is simple brake intervention in excess of the braking required for yaw stability. It is expected that the presence of a brake intervention function in ESC will have a large effect on the rating of vehicles because the average speed through a given test maneuver for vehicles having this function will be much less than for vehicles without it (even if equipped with ESC for yaw stability) under the usual test protocols of coasting through maneuvers and using the entry speed as the test speed. Is the value given to the brake intervention function of ESC as opposed to the yaw stability function by potential rollover rating tests commensurate with its safety value to consumers? Please provide all the data and reasoning that support your view. Should NHTSA measure the vehicle speed at the completion of the maneuver as well as vehicle speed at entry?

4. If open-loop (defined steering input) maneuvers are used to determine whether a vehicle is susceptible to two wheel lift as a result of severe steering actions, superficial changes that reduce tire traction or otherwise reduce vehicle handling (but prevent wheel lift) would be rewarded the same as more fundamental or costly improvements. The same is true of closed loop (path following) maneuvers that use wheel lift as the sole criterion. Should measures of vehicle handling be reported so that consumers can be aware of possible trade-offs. What indicators of vehicles handling would be appropriate to measure and how should this consumer information be reported?

5. What criteria should NHTSA use to select the best vehicle maneuver test for rollover resistance? Should the maneuver that has the greatest chance of producing two wheel lift in susceptible vehicles be chosen regardless of its resemblance to driving situations? Is it more important that the maneuver resemble an emergency maneuver that consumers can visualize? How important is objectivity and repeatability?

IX. Rulemaking Analyses and Notices

Executive Order 12866

This request for comment was not reviewed under Executive Order 12866 (Regulatory Planning and Review). Agency actions to develop tests for NHTSA's New Car Assessment Program are not rulemaking actions because the program does not impose requirements on any party.

X. Submission of Comments

A. How Can I Influence NHTSA's Thinking on This Document?

In developing this document, we tried to address the concerns of all our stakeholders. Your comments will help us improve this notice. We invite you to provide different views on options we propose, new approaches we have not considered, new data, how this document may affect you, or other relevant information. We welcome your views on all aspects of this document, but request comments on specific issues throughout this document. Your comments will be most effective if you follow the suggestions below:

- Explain your views and reasoning as clearly as possible.
- Provide solid technical and cost data to support your views.
- If you estimate potential costs, explain how you arrived at the estimate.
- Tell us which parts of this document you support, as well as those with which you disagree.
- Provide specific examples to illustrate your concerns.
- Offer specific alternatives.
- Refer your comments to specific sections of this document.
- Be sure to include the name, date, and docket number with your comments.

B. How Do I Prepare and Submit Comments?

Your comments must be written and in English. To ensure that your comments are correctly filed in the Docket, please include the docket number of this document in your comments.

Your comments must not be more than 15 pages long. (49 CFR 553.21). We established this limit to encourage you to write your primary comments in a concise fashion. However, you may attach necessary additional documents to your comments. There is no limit on the length of the attachments.

Please submit two copies of your comments, including the attachments, to Docket Management at the address given above under **ADDRESSES**.

Comments may also be submitted to the docket electronically by logging onto the Dockets Management System website at http://dms.dot.gov. Click on ''Help & Information'' or ''Help/Info'' to obtain instructions for filing the document electronically.

C. How Can I Be Sure That My Comments Were Received?

If you wish Docket Management to notify you upon its receipt of your comments, enclose a self-addressed, stamped postcard in the envelope containing your comments. Upon receiving your comments, Docket Management will return the postcard by mail.

D. How Do I Submit Confidential Business Information?

If you wish to submit any information under a claim of confidentiality, you should submit three copies of your complete submission, including the information you claim to be confidential business information, to the Chief Counsel, NHTSA, at the address given above under **FOR FURTHER INFORMATION CONTACT**. In addition, you should submit two copies, from which you have deleted the claimed confidential business information, to Docket Management. When you send a comment containing information claimed to be confidential business information, you should include a cover letter setting forth the information specified in our confidential business information regulation. (49 CFR Part 512.)

E. Will the Agency Consider Late Comments?

We will consider all comments that Docket Management receives before the close of business on the comment closing date indicated above under **DATES.** To the extent possible, we will also consider comments that Docket Management receives after that date. However, late comments will not likely be able to influence our testing program. We encourage commenters to respond as soon as possible since the testing described in this notice is already underway. If Docket Management receives a comment too late for us to consider it in completing our test program developing a proposal on dynamic rollover performance, we will consider that comment as an informal suggestion for future enhancements to our rollover program.

F. How Can I Read the Comments Submitted by Other People?

You may read the comments received by Docket Management at the address given above under **ADDRESSES**. The hours of the Docket are indicated above in the same location.

You may also see the comments on the Internet. To read the comments on the Internet, take the following steps:

(1) Go to the Docket Management System (DMS) Web page of the Department of Transportation (http://dms.dot.gov/).

(2) On that page, click on ''search.''

(3) On the next page (*http://dms.dot.gov/search/*), type in the four-digit docket number shown at the beginning of this document. Example: If the docket number were ''NHTSA–1998–1234,'' you would type ''1234.'' After typing the docket number, click on ''search.''

(4) On the next page, which contains docket summary information for the docket you selected, click on the desired comments. You may download the comments. Although the comments are imaged documents, instead of word processing documents, the ''pdf'' versions of the documents are word searchable.

Please note that even after the comment closing date, we will continue to file relevant information in the Docket as it becomes available. Further, some people may submit late comments. Accordingly, we recommend that you periodically check the Docket for new material.

G. Plain Language

Executive Order 12866 requires each agency to write all rules in plain language. Application of the principles of plain language includes consideration of the following questions:

- Have we organized the material to suit the public's needs?
- Are the requirements in the rule clearly stated?
- Does the rule contain technical language or jargon that is not clear?
- Would a different format (grouping and order of sections, use of headings, paragraphing) make the rule easier to understand?
- Would more (but shorter) sections be better?
- Could we improve clarity by adding tables, lists, or diagrams?
- What else could we do to make the rule easier to understand?

If you have any responses to these questions, please include them in your comments on this document.

Issued on June 27, 2001.

Stephen R. Kratzke,

Associate Administrator for Safety Performance Standards.

Table 1.—Summary of Anticipated Advantages and Disadvantages for Possible Dynamic Rollover Tests

Note: The extent to which many of these anticipated attributes are realized will not be known until the completion of the resesarch project.

1. Path Following Driving Maneuver Tests

A. CU Double Lane Change

Anticipated advantages: Familiar to the public, represents a real maneuver, considers roll momentum, use of speed as criteria implicitly rewards good handling, demonstrates action of ESC.

Anticipated disadvantages: Poor repeatability due to large driver influence, use of wheel lift as main criterion invites trade-offs in tire traction, may operate at a worst case suspension frequency for some vehicles but not others.

B. VDA/ISO/Moose Test

Anticipated advantages: Like CU but with less room for driver variability through tight cone placement, represents a real maneuver, use of speed as criteria implicitly rewards good handling, demonstrates action of ESC.

Anticipated disadvantages: Driver influence is reported to be still on the order of 4 mph, tight lane widths may test driver ability as much a vehicle handling, more like 2 back to back single lane changes—may not include roll momentum, may operate at a worst case suspension frequency for some vehicles but not others (course adjustments for wheelbase mentioned).

C. Open Loop Pseudo-Double Lane Change (Concept for Automating the CU to the Extent Possible Using a Automated Steering Controller)

Anticipated advantages: Eliminates repeatability issues due to driver influences, attempts to represent a real maneuver, considers roll momentum, may use roll feedback to find worst case steering timing for each vehicle, use of speed as criteria implicitly rewards good handling? demonstrates action of ESC.

Anticipated disadvantages: Exists only as a concept—may prove to be entirely impractical, use of wheel lift as main criterion invites trade-offs in tire traction, failure to replicate a realistic path would devalue face validity and speed criterion, may be difficult to develop with available resources.

D. Ford Path Corrected Limit Lane Change

Anticipated advantages: Objective and repeatable, can it ''perfect'' the double lane change? considers roll momentum, demonstrates action of ESC.

Anticipated disadvantages: Suggested criteria requires handling definition and still may reward poor tire traction as it currently operates, rollover resistance is rated on different paths for different vehicles.

2. Open Loop (Defined Steering) Fishhook Maneuver Tests (With Several Steering Timing Ideas To Be Evaluated)

Anticipated advantages: Performed by automated steering controller for maximum objectivity and repeatability, considers roll momentum and seeks worst case for every vehicle, demonstrates action of ESC.

Anticipated disadvantages: Lacks face validity of lane change maneuvers, actual paths may differ widely between vehicles, needs separate handling criteria because poor tire traction is otherwise rewarded.

3. Dynamic Tests Other Than Driving Maneuvers—Not Planned for Evaluation

A. Centrifuge

Advantages: A ''perfection'' of the well known tilt table, expandable to test performance at road perturbations, accounts for suspension and tire deflections (unlike SSF), can represent tripped rollover (like SSF), accurate, repeatable and relatively cheap measurements.

Disadvantages: Suspension optimization for centrifuge test score can degrade handling (unlike SSF), not be perceived as ''dynamic enough'' for TREAD requirements, does not demonstrate action of ESC.

B. Mathematic Simulation

Advantages: Objective and repeatable, solves pavement friction issues, any maneuver is possible.

Disadvantages: Cost of vehicle characterization even greater than for maneuver tests, ESC algorithms proprietary and possibly not known to vehicle mfgr., no universally accepted mathematic model.

BILLING CODE 4910–59–P

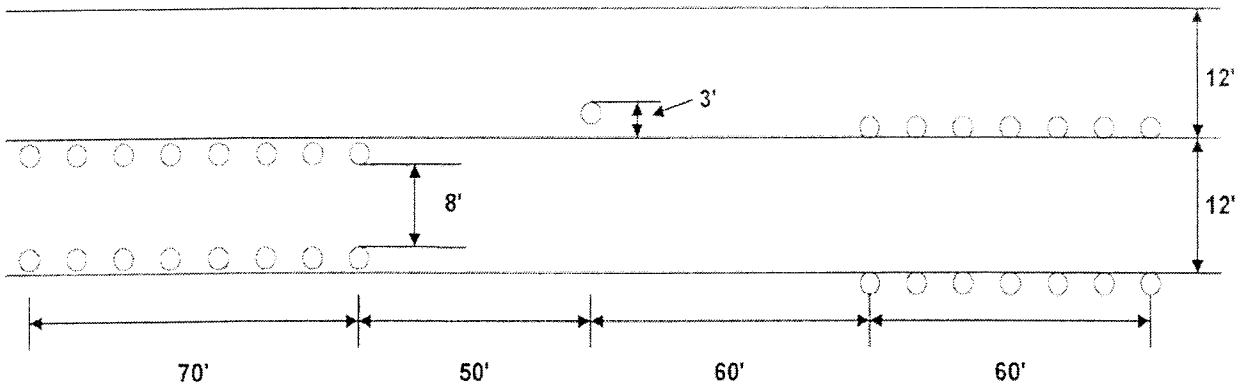

Fig. 1: CU Short Course

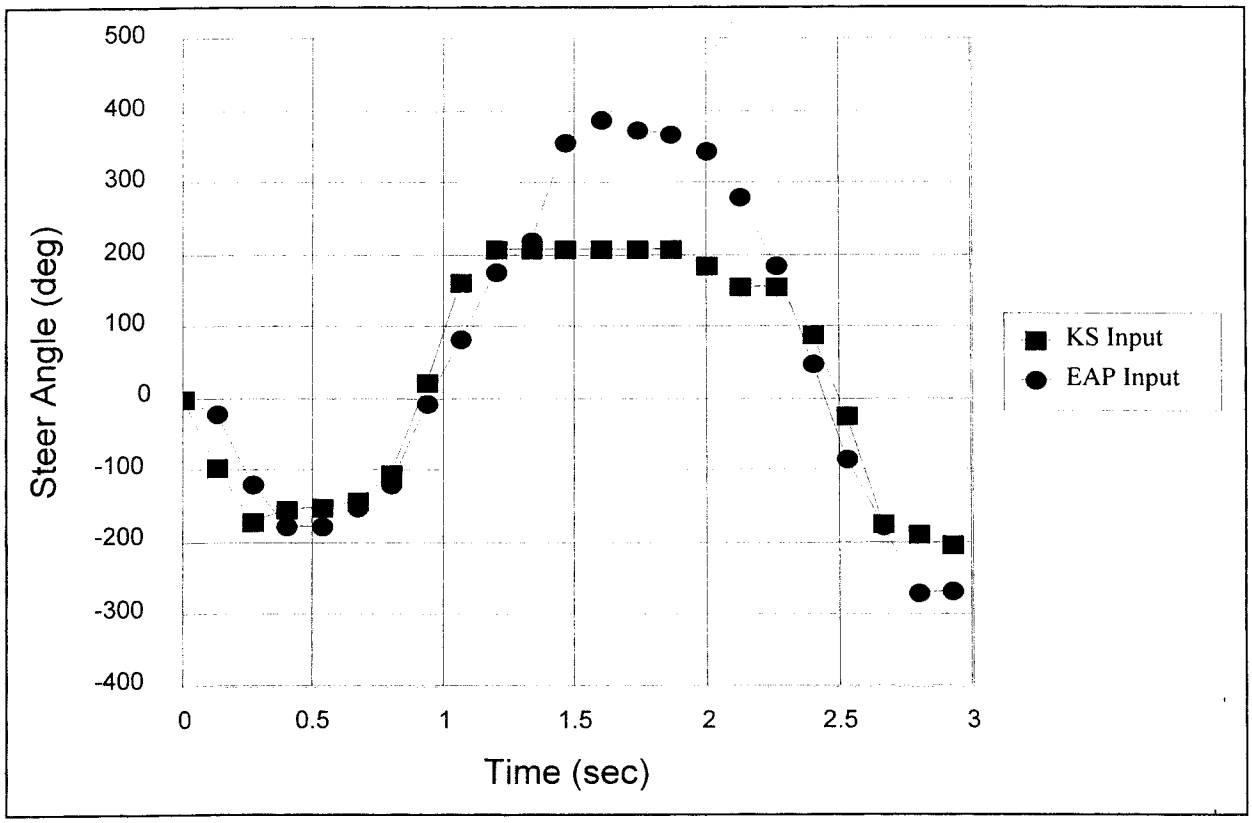

Fig. 2: Steering Profiles for Clean Run by Driver 'KS' and High Tip-Up by Driver 'EAP'

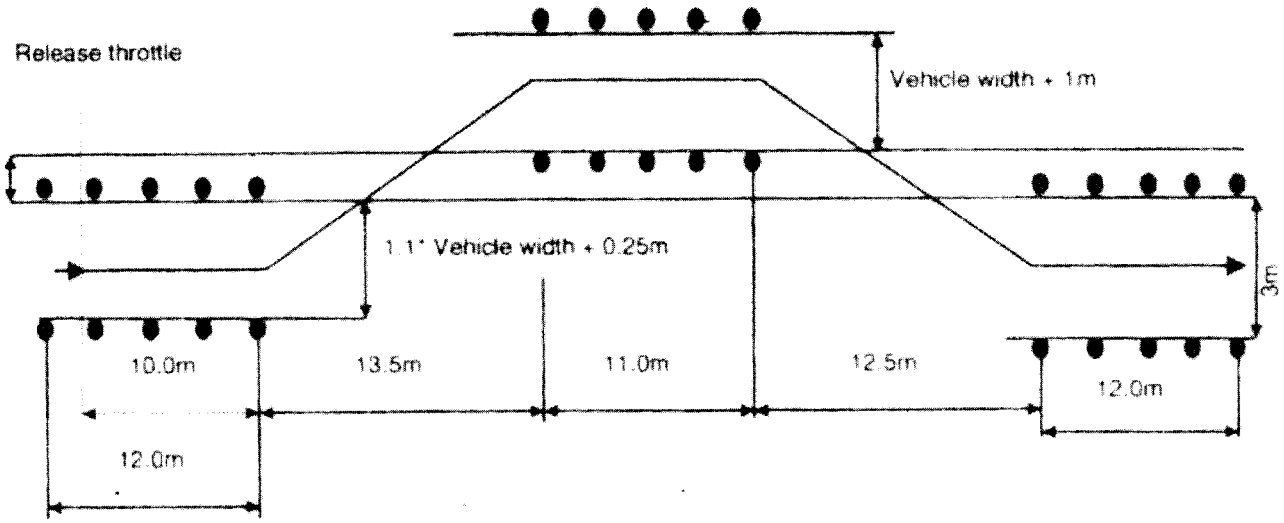

Fig. 3: VDA "Moose" Test Course

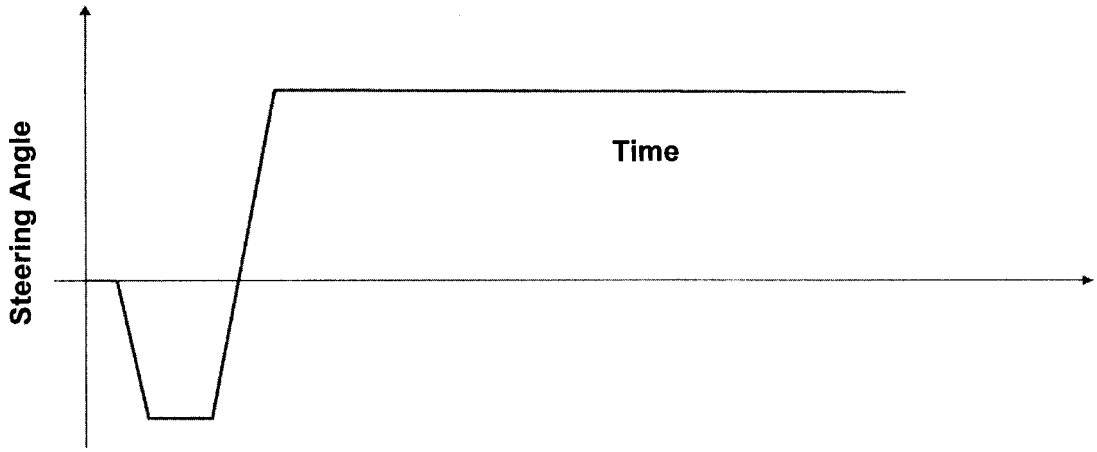

Fig. 4: Defined Steering Input for Basic Fishhook Maneuver

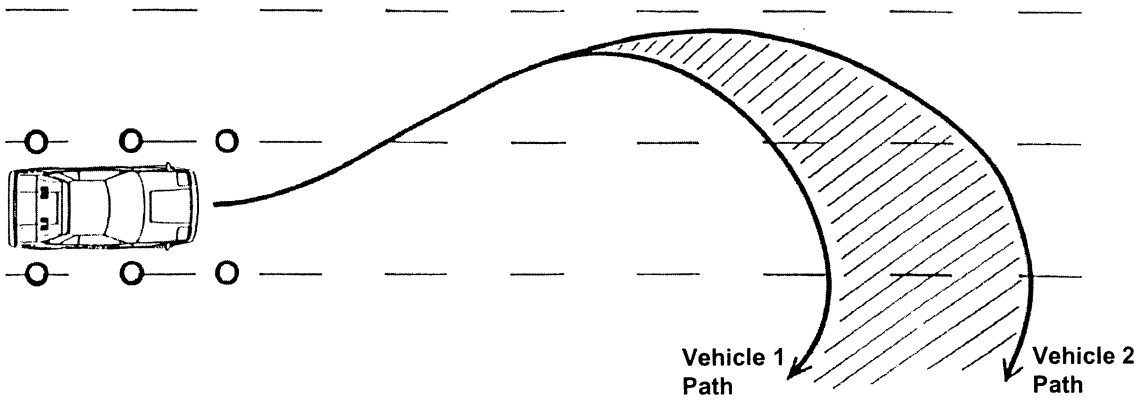

Fig. 5: Path of a Fishhook Maneuver

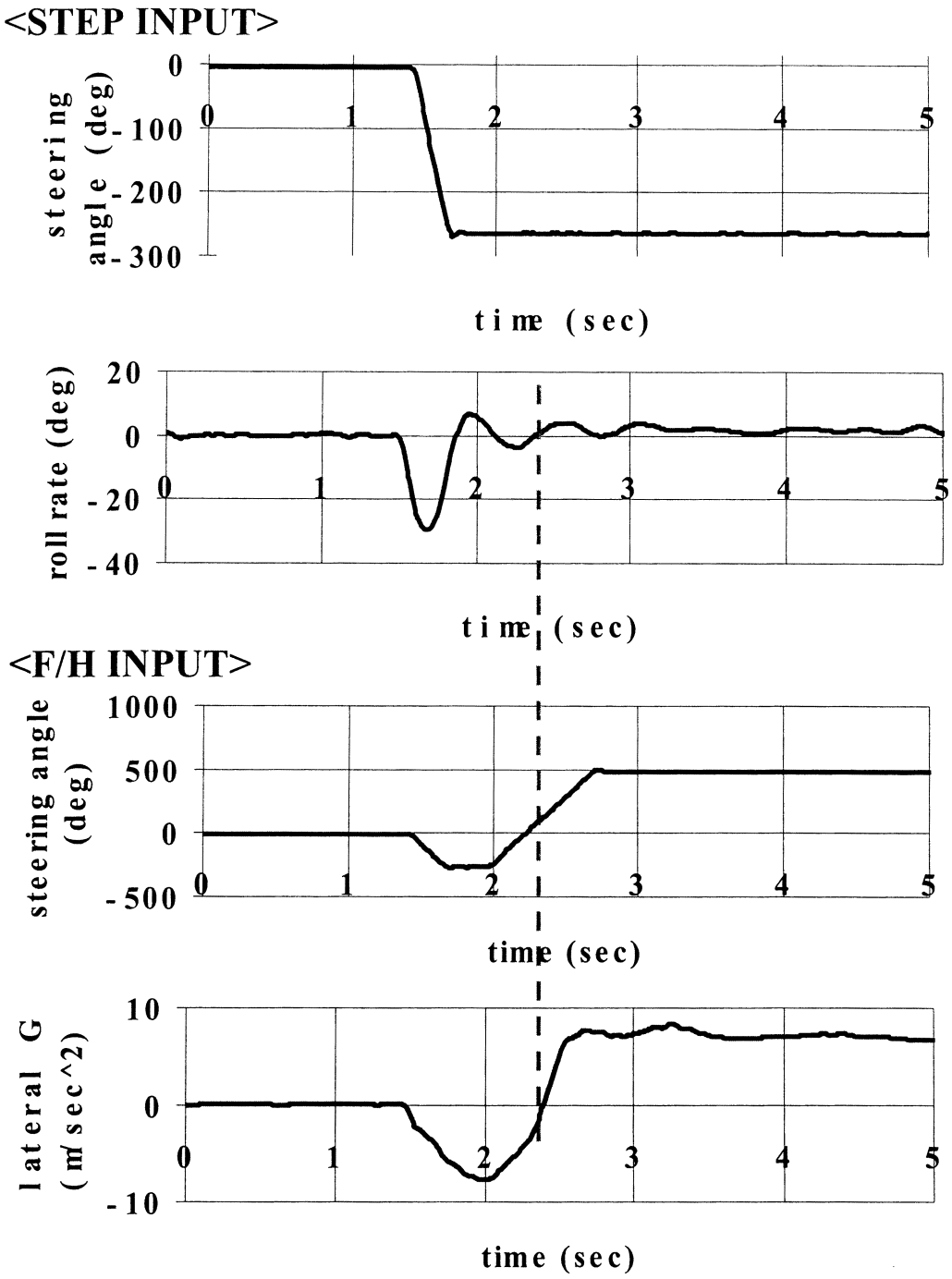

Fig. 6: Nissan Method of Timing Fishhook for Greatest Severity

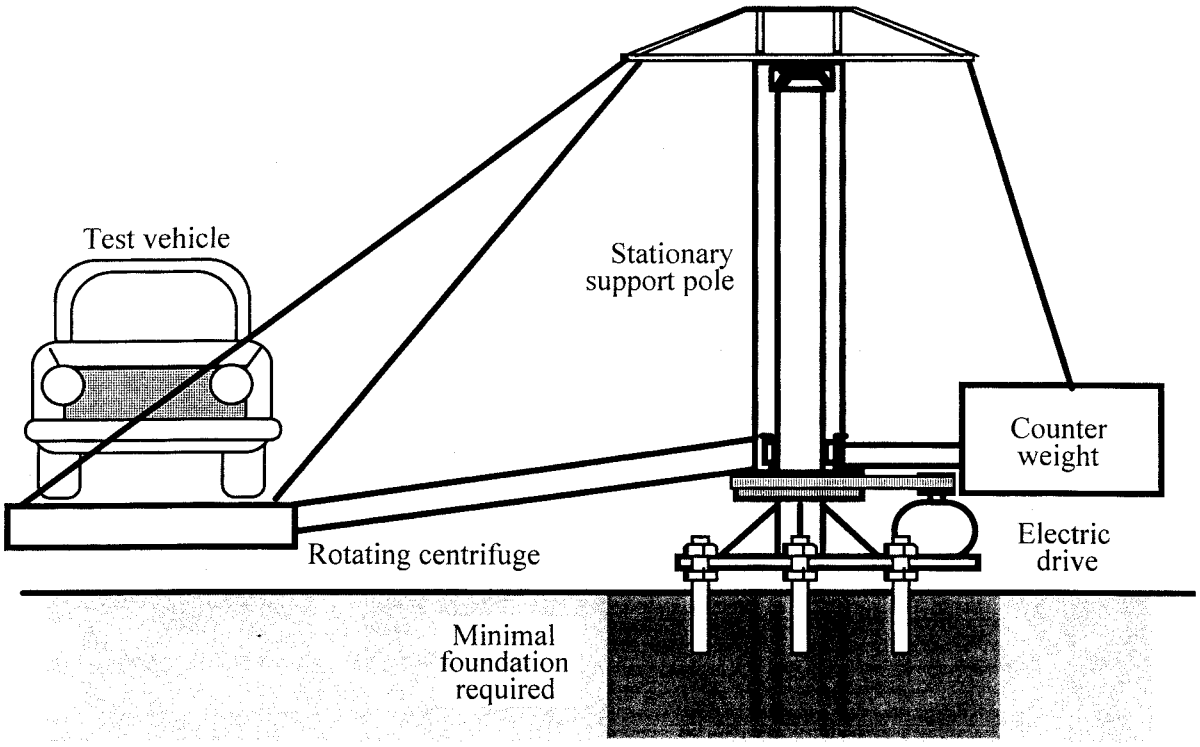

Fig. 7: Centrifuge Test Device for the Measurement of Rollover Threshold

[FR Doc. 01–16659 Filed 7–2–01; 8:45 am]
BILLING CODE 4910–59–C

DEPARTMENT OF THE INTERIOR

Fish and Wildlife Service

50 CFR Part 32

RIN 1018–AG58

2001–2002 Refuge-Specific Hunting and Sport Fishing Regulations

AGENCY: Fish and Wildlife Service, Interior.

ACTION: Proposed rule.

SUMMARY: The Fish and Wildlife Service (we or the Service) proposes to add seven national wildlife refuges (refuges) to the list of areas open for hunting and/or sport fishing, along with pertinent refuge-specific regulations for such activities; and amend certain regulations on other refuges that pertain to migratory game bird hunting, upland game hunting, big game hunting, and sport fishing for 2001–2002.

DATES: You should submit comments on or before August 2, 2001.

ADDRESSES: Submit written comments to Acting Chief, Division of Conservation Planning and Policy, National Wildlife Refuge System, U.S. Fish and Wildlife Service, 4401 N. Fairfax Drive, Room 670, Arlington, VA 22203. See **SUPPLEMENTARY INFORMATION** for information on electronic submission.

FOR FURTHER INFORMATION CONTACT: Leslie A. Marler, (703) 358–2397; Fax (703) 358–2248.

SUPPLEMENTARY INFORMATION: The National Wildlife Refuge System Administration Act of 1966 (NWRSAA) closes national wildlife refuges to all uses until opened. The Secretary of the Interior (Secretary) may open refuge areas to any use, including hunting and/or fishing, upon a determination that such uses are compatible with the purposes of the refuge. The action also must be in accordance with provisions of all laws applicable to the areas, developed in coordination with the appropriate State wildlife agency(ies), must be consistent with the principles of sound fish and wildlife management and administration, and must be otherwise in the public interest. These requirements ensure that we maintain the biological integrity, diversity, and environmental health of the National Wildlife Refuge System (System) for the benefit of present and future generations of Americans.

We review refuge hunting and fishing programs annually to determine whether to include additional refuges or whether individual refuge regulations governing existing programs need modifications, deletions, or additions made to them. Changing environmental conditions, State and Federal regulations, and other factors affecting fish and wildlife populations and habitat may warrant modifications to refuge-specific regulations to ensure the continued compatibility of hunting and fishing programs and that these programs will not materially interfere with or detract from the fulfillment of the System's mission or the purposes of the refuge.

You may find provisions governing hunting and fishing on national wildlife refuges in Title 50 of the Code of Federal Regulations in part 32. We regulate hunting and fishing on refuges to:

- Ensure compatibility with the purpose(s) of the refuge;
- Properly manage the fish and wildlife resource;
- Protect other refuge values;
- Ensure refuge visitor safety; and
- Provide opportunities for high-quality recreational and educational experiences.

On many refuges where we decide to allow hunting and fishing, our general policy of adopting regulations identical to State hunting and fishing regulations is adequate in meeting these objectives. On other refuges, we must supplement State regulations with more restrictive Federal regulations to ensure that we meet our management responsibilities, as outlined under the section entitled ''Statutory Authority.'' We issue refuge-specific hunting and sport fishing regulations when we open wildlife refuges to either migratory game bird hunting, upland game hunting, big game hunting, or sport fishing. These regulations list the wildlife species that you may hunt or those species subject to sport fishing, seasons, bag limits, methods of hunting or fishing, descriptions of open areas, and other provisions as appropriate. You may find previously issued refuge-specific regulations for hunting and fishing in 50 CFR part 32. In this rulemaking, we are promulgating many of the amendments to these sections to standardize and clarify the existing language of these regulations.

Some refuges make seasonal information available in brochures or leaflets, which we provide for in 50 CFR 25.31, to supplement these refuge-specific regulations.

Plain Language Mandate

In this rule some of the revisions to the individual refuge units are to comply with a Presidential mandate to use plain language in regulations and do not modify the substance of the previous regulations. These types of changes include using ''you'' to refer to the reader and ''we'' to refer to the Service and using the word ''allow'' instead of ''permit'' when we do not require the use of a permit for an activity.

Statutory Authority

The National Wildlife Refuge System Administration Act (NWRSAA) of 1966 (16 U.S.C. 668dd–668ee, as amended), and the Refuge Recreation Act (RRA) of 1962 (16 U.S.C. 460k–460k–4) govern the administration and public use of national wildlife refuges.

Amendments enacted by the National Wildlife Refuge System Improvement Act (NWRSIA or Act) of 1997 amend and build upon the NWRSAA in a manner that provides an improved ''Organic Act'' for the System similar to those that exist for other public lands. The Act serves to ensure that we effectively manage the System as a national network of lands, waters, and interests for the protection and conservation of our Nation's wildlife resources. The NWRSAA states first and foremost that we focus the mission of the System on conservation of fish, wildlife, and plant resources and their habitats. This Act requires the Secretary, before initiating or allowing a new use of a refuge, or before expanding, renewing, or extending an existing use of a refuge, to determine that the use is compatible and promotes public safety. The NWRSIA establishes as the policy of the United States that wildlife-dependent recreation, when compatible, is a legitimate and appropriate public use of the System, through which the American public can develop an appreciation for fish and wildlife. The NWRSIA establishes six wildlife-dependent recreational uses, when compatible, as the priority general public uses of the System. Those priority uses are: hunting, fishing, wildlife observation and photography, and environmental education and interpretation.

The RRA authorizes the Secretary to administer areas within the System for public recreation as an appropriate incidental or secondary use only to the extent that doing so is practicable and not inconsistent with the primary purpose(s) for which Congress and the Service established the areas. This act requires that any recreational use of refuge lands be compatible with the primary purpose(s) for which we established the refuge and not inconsistent with other previously authorized operations.

The NWRSAA and RRA also authorize the Secretary to issue regulations to carry out the purposes of the acts and regulate uses.

We develop hunting and sport fishing plans for each refuge prior to opening it to hunting or fishing. In many cases, we develop refuge-specific regulations to ensure the compatibility of the programs with the purpose(s) for which we established the refuge. We have ensured initial compliance with the NWRSAA and the RRA for hunting and sport fishing on newly acquired refuges through an interim determination of compatibility made at or near the time of acquisition. This policy ensures that we make the determinations required by these acts prior to adding refuges to the lists of areas open to hunting and fishing in 50 CFR part 32. We ensure continued compliance by the development of Comprehensive Conservation Plans, long-term hunting and sport fishing plans, and by annual review of hunting and sport fishing programs and regulations.

In preparation for new openings, we include the following documents in the refuges' ''opening package:'' (1) Step-down hunting and/or fishing management plan; (2) Appropriate NEPA documentation (Categorical Exclusion, Environmental Assessment, or Environmental Impact Statement); (3) Appropriate decision documentation (e.g., Finding of No Significant Impact); (4) Section 7 evaluation; (5) Copies of letters requesting State and, where appropriate, Tribal involvement and the results of the request; (6) A draft news release; (7) Outreach plan; and (8) Draft refuge-specific regulation. Upon review of these documents, we have determined that the opening of these national wildlife refuges to hunting and fishing is compatible with the principles of sound fish and wildlife management and administration and otherwise will be in the public interest.

We are correcting administrative errors in 50 CFR part 32 that occurred when we inadvertently dropped migratory game bird hunting and sport fishing as activities open to the public in Lacreek National Wildlife Refuge in the State of South Dakota and sport fishing as an activity open to the public in Minidoka National Wildlife Refuge in the State of Idaho, and when we did not remove sport fishing from the list of activities open to the public in Delevan National Wildlife Refuge in the State of California. Lacreek National Wildlife Refuge has been open to sport fishing and migratory game bird hunting since the late 1960's. Minidoka National Wildlife Refuge has been open to sport fishing since the late 1980's. Delevan National Wildlife Refuge closed to sport fishing over a decade ago. We are adding Litchfield Wetland Management District in the State of Minnesota, which has been open since 1978, to clarify a hunting blind issue. Wetland management districts contain numerous waterfowl production areas. Land acquired as a ''waterfowl production area'' is annually open to hunting of migratory game birds, upland game, and big game (see 50 CFR 32.1).

We are making another technical correction by removing Mark Twain National Wildlife Refuge from the States of Illinois, Iowa, and Missouri. We have officially renamed units of Mark Twain National Wildlife Refuge as Great River National Wildlife Refuge, Middle Mississippi River National Wildlife Refuge, Port Louisa National Wildlife Refuge, Two Rivers National Wildlife Refuge, and Clarence Cannon National Wildlife Refuge. The headquarters administrative site will retain the name Mark Twain Refuge Complex.

We propose to allow the following wildlife-dependent recreational activities:

Hunting of migratory game birds on nine refuges, including:

- Grand Bay National Wildlife Refuge, Alabama and Mississippi
- Great River National Wildlife Refuge, Illinois and Missouri
- Middle Mississippi River National Wildlife Refuge, Illinois and Missouri
- Port Louisa National Wildlife Refuge, Illinois and Iowa
- Two Rivers National Wildlife Refuge, Illinois and Missouri
- Clarks River National Wildlife Refuge, Kentucky
- Petit Manan National Wildlife Refuge, Maine
- Clarence Cannon National Wildlife Refuge, Missouri
- Deep Fork National Wildlife Refuge, Oklahoma

Upland game hunting on seven refuges, including:

- Grand Bay National Wildlife Refuge, Alabama and Mississippi
- Great River National Wildlife Refuge, Illinois and Missouri
- Middle Mississippi River National Wildlife Refuge, Illinois and Missouri
- Port Louisa National Wildlife Refuge, Illinois and Iowa
- Two Rivers National Wildlife Refuge, Illinois and Missouri
- Clarks River National Wildlife Refuge, Kentucky
- Clarence Cannon National Wildlife Refuge, Missouri

Big game hunting on nine refuges, including:

- Grand Bay National Wildlife Refuge, Alabama and Mississippi
- Great River National Wildlife Refuge, Illinois and Missouri
- Middle Mississippi River National Wildlife Refuge, Illinois and Missouri
- Port Louisa National Wildlife Refuge, Illinois and Iowa
- Two Rivers National Wildlife Refuge, Illinois and Missouri
- Big Oaks National Wildlife Refuge, Indiana
- Clarks River National Wildlife Refuge, Kentucky
- Petit Manan National Wildlife Refuge, Maine
- Clarence Cannon National Wildlife Refuge, Missouri

Sport fishing on nine refuges, including:

- Sacramento River National Wildlife Refuge, California
- Great River National Wildlife Refuge, Illinois and Missouri
- Middle Mississippi River National Wildlife Refuge, Illinois and Missouri
- Port Louisa National Wildlife Refuge, Illinois and Iowa
- Two Rivers National Wildlife Refuge, Illinois and Missouri
- Big Oaks National Wildlife Refuge, Indiana
- Clarks River National Wildlife Refuge, Kentucky
- Clarence Cannon National Wildlife Refuge, Missouri
- Supawna Meadows National Wildlife Refuge, New Jersey

In accordance with NWRSAA and the RRA, we have determined that these openings are compatible and consistent with the purpose(s) for which we established the respective refuges. A copy of the compatibility determinations for these respective refuges is available by request to the contact noted under the heading **ADDRESSES.**

Request for Comments

You may comment on this proposed rule by any one of several methods:

1. You may mail comments to: Acting Chief, Division of Conservation Planning and Policy, National Wildlife Refuge System, U.S. Fish and Wildlife Service, 4401 N. Fairfax Drive, Room 670, Arlington, VA 22203.

2. You may comment via the Internet to: Refuge_Specific_Comments@fws.gov. Please submit Internet comments as an ASCII file avoiding the use of special characters and any form of encryption. Please also include: ''Attn: 1018–AG58'' and your full name and return mailing address in your Internet message. If you only use your e-mail address, we will consider your comment to be anonymous. If you do not receive a confirmation from the system that we have received your Internet message, contact us directly at (703) 358–1744.

3. You may fax comments to: Acting Chief, Division of Conservation Planning and Policy, National Wildlife Refuge System, (703) 358–2248.

4. Finally, you may hand-deliver comments to the address mentioned above.

We seek comments on this proposed rule and will accept comments by any of the methods described above. Our practice is to make comments, including names and home addresses of respondents, available for public review during regular business hours. Individual respondents may request that we withhold their home address from the rulemaking record, which we will honor to the extent allowable by law. In some circumstances, we would withhold from the rulemaking record a respondent's identity, as allowable by law. If you wish for us to withhold your name and/or address, you must state this request prominently at the beginning of your comment. However, we will not consider anonymous comments. We will make all submissions from organizations or businesses and from individuals identifying themselves as representatives or officials of organizations or businesses, available for public inspection in their entirety.

Department of the Interior policy is, whenever practicable, to afford the public a meaningful opportunity to participate in the rulemaking process. We considered providing a 60-day rather than a 30-day comment period. However, we determined that an additional 30-day delay in processing these refuge-specific hunting and fishing regulations would hinder the effective planning and administration of our hunting and fishing programs. That delay would jeopardize establishment of hunting and fishing programs this year, or shorten their duration. Many of these rules also relieve restrictions and allow the public to participate in recreational activities on a number of refuges. In addition, in order to continue to provide for previously authorized hunting opportunities while at the same time provide for adequate resource protection, we must be timely in providing modifications to certain hunting programs on some refuges.

When finalized, we will incorporate this regulation into 50 CFR part 32. Part 32 contains general provisions and refuge-specific regulations for hunting and sport fishing on national wildlife refuges.

Clarity of This Regulation

Executive Order 12866 requires each agency to write regulations that are easy to understand. We invite your comments on how to make this rule easier to understand, including answers to questions such as the following: (1) Are the requirements in the rule clearly stated? (2) Does the rule contain technical language or jargon that interferes with its clarity? (3) Does the format of the rule (grouping and order of sections, use of headings, paragraphing, etc.) aid or reduce its clarity? (4) Would the rule be easier to understand if it were divided into more (but shorter) sections? (5) Is the description of the rule in the **SUPPLEMENTARY INFORMATION** section of the preamble helpful in understanding the rule? (6) What else could we do to make the rule easier to understand?

Regulatory Planning and Review

In accordance with the criteria in Executive Order 12866, the Service asserts that this rule is not a significant regulatory action. The Office of Management and Budget (OMB) makes

the final determination under Executive Order 12866.

a. This rule will not have an annual economic effect of $100 million or adversely affect an economic sector, productivity, jobs, the environment, or other units of the government. A cost-benefit and full economic analysis is not required. The purpose of this rule is to open 12 refuges to hunting and fishing activities. We created five of these refuges from existing units of Mark Twain National Wildlife Refuge in Illinois, Iowa, and Missouri and, as such, hunting and fishing activities were already available to the public. We exclude these five refuges from the analysis because they are not an increase in supply of hunting and fishing opportunities. The seven new refuges are located in the States of Alabama, Mississippi, Kentucky, Indiana, Oklahoma, Maine, California, and New Jersey. Fishing and hunting are two of the priority public uses of national wildlife refuges recognized as legitimate and appropriate, and we should facilitate their implementation, subject to such restrictions or regulations as may be necessary to ensure their compatibility with the purpose of each refuge. Many of the 535 existing national wildlife refuges already have programs where we allow fishing and hunting. Not all refuges have the necessary resources and landscape that would make fishing and hunting opportunities available to the public. By opening these seven new refuges, we have determined that we can make high-quality and safe experiences available to the public. This rule establishes new hunting and/or fishing programs at the following refuges: Grand Bay, Clarks River, Big Oaks, Deep Fork, Petit Manan, Sacramento River, and Supawna Meadows National Wildlife Refuge.

Following a best-case scenario, if the refuges establishing new fishing and hunting programs were a pure addition to the supply of such activities, it would mean an estimated increase of 14,630 days of hunting and 18,460 user days of fishing (Table 1). However, the number of Americans participating in fishing and hunting activities has been stable since 1991. Any increase in the supply of these activities introduced by adding refuges where the activity is available will most likely be offset by other sites losing participants, especially if the new sites have higher quality fishing and/or hunting opportunities. Using the value of the difference in the upper and lower bounds of the 95 percent confidence interval for average consumer surplus to represent the estimate of the increase in consumer surplus for higher quality fishing and hunting (Walsh, Johnson, and McKean, 1990 [1]) yields an estimated increase in consumer surplus of $672,000 annually (2001 dollars based on consumer surplus quality change). If the possible fishing and hunting opportunities attributable to this rule are a pure addition to the current supply, then the consumer surplus will be slightly over $2 million annually. As stated earlier, the trend is flat in participation in fishing and hunting activities in the last 10 years and, therefore, if new refuges are open to these activities, the true estimate of the benefits will be closer to $672,000 annually. Consequently, this rule will have a small measurable economic benefit on the United States economy.

TABLE 1.—ESTIMATED CHANGES IN CONSUMER SURPLUS FROM ADDITIONAL FISHING AND HUNTING OPPORTUNITIES IN 2001

Refuge	Additional Fishing Days	Additional Hunting Days	Fishing and Hunting Combined
Grand Bay	.....	330	330
Clarks River	5,000	5,000	10,000
Big Oaks	7,000	9,000	16,000
Deep Fork	.....	250	250
Petit Manan	.....	50	50
Sacramento River	1,000	.....	1,000
Supawna Meadows	5,460	.....	5,460
Total Days/Year	18,460	14,630	33,090
Consumer Surplus per Day (1987$)	$39.25	$41.69	
Consumer Surplus for Quality Change	$14.90	$10.66	
Change in Total Consumer Surplus	$724,555	$609,925	(1987$) $1,334,480 (2001$) $2,080,661
Change in Quality Consumer Surplus	$275,054	$155,956	(1987$) $431,010 (2001$) $672,011

b. This proposed rule will not create inconsistencies with other agencies' actions. This action pertains solely to the management of the National Wildlife Refuge System. The fishing and hunting activities located on national wildlife refuges account for approximately 1 percent of the available supply in the United States. Any small, incremental change in the supply of fishing and hunting opportunities will not measurably impact any other agency's existing programs.

c. This proposed rule will not materially affect entitlements, grants, user fees, loan programs, or the rights and obligations of their recipients. This proposed rule does not affect entitlement programs. There are no grants or other Federal assistance programs associated with public use of national wildlife refuges.

d. This proposed rule will not raise novel legal or policy issues. It opens seven additional refuges for fishing and hunting activities and continues the practice of allowing recreational public use of national wildlife refuges. Many refuges in the System currently have opportunities for the public to hunt and fish on refuge lands.

[1] Article presented at the Western Regional Science Association Annual Meeting in Molokai, Hawaii on February 22, 1990.

Regulatory Flexibility Act

We certify that this rule will not have a significant economic effect on a substantial number of small entities as defined under the Regulatory Flexibility Act (5 U.S.C. 601 *et seq.*). A Regulatory Flexibility Analysis is not required. Accordingly, a Small Entity Compliance Guide is not required.

Congress created the National Wildlife Refuge System to conserve fish, wildlife, and plants and their habitats and facilitated this conservation mission by providing Americans opportunities to visit and participate in compatible wildlife-dependent recreation, including fishing and hunting, as priority general uses on national wildlife refuges and to better appreciate the value of, and need for, wildlife conservation.

This proposed rulemaking does not increase the types of recreation allowed on the System but establishes hunting and/or fishing programs on seven additional refuges. As a result, there will be opportunities for an increase in wildlife-dependent recreation on national wildlife refuges. The changes in the amount of permitted use are likely to increase visitor activity on the seven national wildlife refuges. But, as stated above, this is likely to be a substitute site for the activity and not necessarily an increase in participation rates for the activity. To the extent visitors spend time and money in the area of the refuge that would not have been spent there anyway, they contribute new income to the regional economy and benefit local businesses.

For purposes of analysis, we will assume that any increase in refuge visitation is a pure addition to the supply of the available activity. This will result in a best-case scenario and is expected to overstate the benefits to local businesses. The latest information on the distances traveled for fishing and hunting activities indicates that over 80 percent of the participants travel less than 100 miles from home to engage in the activity. This indicates that participants will spend their travel-related expenditures in the local economy. Since participation is scattered across the country, many small businesses benefit. The National Survey of Fishing, Hunting, and Wildlife Associated Recreation identifies expenditures for food and lodging, transportation, and other incidental expenses. Using the average expenditures for these categories with the expected maximum additional participation on the System as a result of this proposed rule yields the following estimates (Table 2) compared to total business activity for these sectors.

TABLE 2.—ESTIMATION OF THE ADDITIONAL FISHING AND HUNTING OPPORTUNITIES WITH THE OPENING OF SEVEN REFUGES TO FISHING AND/OR HUNTING IN 2001

	U.S. total participation in 1996	Average per day	Current refuge participation w/o duplication	Possible additional refuge participation
Anglers				
Total Days Spent	626 Mil.		6.7 Mil.	18,460
Total Expenditures	$38.0 Bil.	$61	$406.3 Mil.	$1,120,575
Trip Related	$15.4 Bil.	$25	$164.6 Mil.	$454,128
Food and Lodging	$6.0 Bil.	$10	$64.1 Mil.	$176,933
Transportation	$3.7 Bil.	$6	$39.6 Mil.	$109,109
Other	$5.7 Bil.	$9	$60.9 Mil.	$168,086
Hunters				
Total Days Spent	257 Mil.		2.0 Mil.	14,630
Total Expenditures	$21 Bil.	$82	$164.4 Mil.	$1,195,447
Trip Related	$5.2 Bil.	$20	$40.7 Mil.	$296,016
Food and Lodging	$2.5 Bil.	$10	$19.6 Mil.	$142,315
Transportation	$1.8 Bil.	$7	$14.1 Mil.	$102,467
Other	$900 Mil.	$4	$7.0 Mil.	$51,233

Using a national impact multiplier for wildlife-associated recreation developed for the report ''1996 National and State Economic Impacts of Wildlife Watching'' for the estimated increase in direct expenditures yields a total economic impact of $7.7 million dollars (2001 dollars). Since we know that most of the fishing and hunting occur within 100 miles of a participant's residence, then it is unlikely that most of this spending would be ''new'' money coming into a local economy and, therefore, would be offset with a decrease in some other sector of the local economy. The net gain to the local economies would be no more than $7.7 million and most likely considerably less. Since 80 percent of the participants travel less than 100 miles to engage in hunting and fishing activities, their spending patterns would not add new money in the local economy and, therefore, the real impact would be on the order of $1.5 million annually. Taken as percent of similar figures for this type of economic activity, it shows that the maximum increase at most (if all spending were new money) ranges from .01 percent to 3.58 percent for local retail trade spending (Table 3). Even the three counties in Indiana (Big Oaks National Wildlife Refuge) that would have a share of the $3.7 million increase in recreationist spending (if all spending were from outside the retail area) would average approximately $7,000 per establishment.

The majority of affected counties have a large percentage of their retail trade establishments that qualify as small businesses. With such a small increase in overall spending that we anticipate from this proposed rule, it is unlikely that a substantial number of small entities will have more than a small benefit from the increased recreationist spending near the affected refuges.

TABLE 3.—COMPARATIVE EXPENDITURES FOR RETAIL TRADE ASSOCIATED WITH ADDITIONAL REFUGE VISITATION IN 2001

Refuge/county(ies)	Retail trade in 1997 (in mil.)	Estimated max. refuge addition	Addition as a % of total	Total retail establ.	Establ. with <10 emp.
Grand Bay		$77 thou	.01		
Mobile, AL	$608			2,229	1,467
Jackson, MS	$131			681	491
Clarks River		$2.3 mil	1.03		
Graves, KY	$ 37			175	119
McCracken, KY	$154			659	443
Marshall, KY	$ 36			168	122
Big Oaks		$3.7 mil	3.58		
Jefferson, IN	$ 45			218	153
Jennings, IN	$ 32			100	70
Ripley, IN	$ 27			168	113
Deep Fork		$58 thou	.18		
Okmulgee, OK	$ 32			194	140
Petit Manan		$12 thou .	03		
Washington, ME	$ 40			281	206
Sacramento River		$233 thou	.06		
Butte, CA	$287			1,095	736
Lake, CA	$ 58			296	229
Tehama, CA	$ 70			244	168
Supawna Meadows		$1.3 mil	1.93		
Salem, NJ	$ 66			305	203

Many small businesses may benefit from some increased wildlife refuge visitation. However, we expect that much of this benefit will be offset as recreationists spend the same money in a different location. We expect that the incremental recreational opportunities will be scattered, and so we do not expect that the rule will have a significant economic effect (benefit) on a substantial number of small entities in any region or nationally.

Small Business Regulatory Enforcement Fairness Act

The proposed rule is not a major rule under 5 U.S.C. 804(2), the Small Business Regulatory Enforcement Fairness Act. This rule:

a. Does not have an annual effect on the economy of $100 million or more. The additional fishing and hunting opportunities at the seven refuges that do not currently have these programs would generate expenditures by anglers and hunters with an economic impact estimated at $7.7 million per year (2001 dollars). Consequently, the maximum benefit of this rule for businesses, both small and large, would not be sufficient to make this a major rule. The impact would be scattered across the country and would most likely not be significant in any local area.

b. Will not cause a major increase in costs or prices for consumers, individual industries, Federal, State, or local government agencies, or geographic regions. This proposed rule will have only a slight effect on the costs of hunting and fishing opportunities of Americans. Under the assumption that any additional hunting and fishing opportunities would be of high quality, participants would be attracted to the refuge. If the refuge were closer to the participant's residence, then a reduction in travel costs would occur and benefit the participants. We do not have information to quantify this reduction in travel cost; but we have to assume that, since most people travel less than 100 miles to hunt and fish now, the reduced travel cost would be small for the additional days of hunting and fishing generated by this proposed rule. We do not expect this proposed rule to affect the supply or demand for fishing and hunting opportunities in the United States and, therefore, it should not affect prices for fishing and hunting equipment and supplies, or the retailers that sell equipment. Additional refuge hunting and fishing opportunities would account for less than .04 percent of the available opportunities in the United States.

c. Does not have significant adverse effects on competition, employment, investment, productivity, innovation, or the ability of United States-based enterprises to compete with foreign-based enterprises. Because this proposed rule represents such a small proportion of recreational spending of a small number of affected hunters and anglers (approximately a maximum impact of $7.7 million annually), there will be no measurable economic effect on the wildlife-dependent industry, which has annual sales of equipment and travel expenditures of $72 billion nationwide. This proposed rule adds seven refuges to the list of refuges that have hunting and/or fishing programs. Refuges that establish hunting and fishing programs may hire additional staff from the local community to assist with the programs, but this would not be a significant increase with this proposed rule adding only seven refuges. Consequently, there are no anticipated significant employment or small business effects.

Unfunded Mandates Reform Act

Since this rule applies to public use of federally owned and managed refuges, it does not impose an unfunded mandate on State, local, or Tribal governments or the private sector of more than $100 million per year. The rule does not have a significant or unique effect on State, local, or Tribal governments or the private sector. A statement containing the information required by the Unfunded Mandates Reform Act (2 U.S.C. 1531 et seq.) is not required.

Takings (Executive Order 12630)

In accordance with Executive Order 12630, the rule does not have significant takings implications. This regulation will affect only visitors at national wildlife refuges and limit what they can do while they are on a refuge.

Federalism (Executive Order 13132)

As discussed in the Regulatory Planning and Review and Unfunded Mandates Reform Act sections above, this rule does not have sufficient federalism implications to warrant the preparation of a Federalism Assessment under Executive Order 13132. In

preparing this proposed rule, we worked with State governments.

Civil Justice Reform (Executive Order 12988)

In accordance with Executive Order 12988, the Office of the Solicitor has determined that the rule does not unduly burden the judicial system and meets the requirements of sections 3(a) and 3(b)(2) of the Order. The regulation will clarify established regulations and result in better understanding of the regulations by refuge visitors.

Energy Supply, Distribution or Use (Executive Order 13211)

On May 18, 2001, the President issued Executive Order 13211 on regulations that significantly affect energy supply, distribution, and use. Executive Order 13211 requires agencies to prepare Statements of Energy Effects when undertaking certain actions. Because this rule only adds seven refuges to the list of refuges that have hunting and/or fishing programs and makes minor changes to other refuges open to those activities, it is not a significant regulatory action under Executive Order 12866 and is not expected to significantly affect energy supplies, distribution, and use. Therefore, this action is a not a significant energy action and no Statement of Energy Effects is required.

Consultation and Coordination with Indian Tribal Governments (Executive Order 13175)

In accordance with Executive Order 13175, we have evaluated possible effects on federally recognized Indian tribes and have determined that there are no effects. We coordinate recreational use on national wildlife refuges with Tribal governments having adjoining or overlapping jurisdiction before we propose the regulations. This regulation is consistent with and not less restrictive than Tribal reservation rules.

Paperwork Reduction Act

This regulation does not contain any information collection requirements other than those already approved by the Office of Management and Budget under the Paperwork Reduction Act (OMB Control Number is 1018–0102). See 50 CFR 25.23 for information concerning that approval. An agency may not conduct or sponsor and a person is not required to respond to a collection of information unless it displays a currently valid OMB control number.

Endangered Species Act Section 7 Consultation

In preparation for new openings, we include Section 7 consultation documents approved by the Service's Endangered Species program in the refuge's ''openings package'' for Regional review and approval from the Washington Office. We reviewed the changes in hunting and fishing regulations herein with regard to Section 7 of the Endangered Species Act of 1973 (16 U.S.C. 1531–1543). For the national wildlife refuges proposed to open for hunting and/or fishing we have determined that Grand Bay, Supawna Meadows, Petit Manan, Sacramento River (for valley elderberry longhorn beetle), and Clarks River (for bald eagles) National Wildlife Refuges will not likely adversely affect and Clarks River (for Indiana bat) and Sacramento River National Wildlife Refuges will not affect the continued existence of any endangered or threatened species or result in the destruction or adverse modification of designated critical habitat of such species within the System.

We also comply with Section 7 of the Endangered Species Act of 1973 (16 U.S.C. 1531–1543) when developing Comprehensive Conservation Plans, step-down management plans for public use of refuges, and prior to implementing any new or revised public recreation program on a refuge as identified in 50 CFR 26.32. We also make determinations required by the Endangered Species Act on a case-by-case basis before the addition of a refuge to the lists of areas open to hunting or fishing as contained in 50 CFR 32.7.

National Environmental Policy Act

We analyzed this rule in accordance with the criteria of the National Environmental Policy Act of 1969 (NEPA) (42 U.S.C. 4332(C)) and 516 DM 6, Appendix 1. This rule does not constitute a major Federal action significantly affecting the quality of the human environment. An environmental impact statement/assessment is not required.

A categorical exclusion from NEPA documentation applies to this amendment of refuge-specific hunting and fishing regulations since it is technical and procedural in nature, and the environmental effects are too broad, speculative, or conjectural to lend themselves to meaningful analysis (516 DM 2, Appendix 1.10).

Prior to the addition of a refuge to the list of areas open to hunting and fishing in 50 CFR part 32, we develop hunting and fishing plans for the affected refuges. We incorporate these proposed refuge hunting and fishing activities in the refuge Comprehensive Conservation Plans (CCPs) and/or other step-down management plans, pursuant to our refuge planning guidance in 602 FW 1, 3, and 4. We prepare these CCPs and step-down plans in compliance with section 102(2)(C) of NEPA, and the Council on Environmental Quality's regulations for implementing NEPA in 40 CFR parts 1500–1508. We invite the affected public to participate in the review, development, and implementation of these plans.

Available Information for Specific Refuges

Individual refuge headquarters retain information regarding public use programs and the conditions that apply to their specific programs and maps of their respective areas. You may also obtain information from the Regional offices at the addresses listed below:

Region 1—California, Hawaii, Idaho, Nevada, Oregon, and Washington. Regional Chief, National Wildlife Refuge System, U.S. Fish and Wildlife Service, Eastside Federal Complex, Suite 1692, 911 N.E. 11th Avenue, Portland, Oregon 97232–4181; Telephone (503) 231–6214.

Region 2—Arizona, New Mexico, Oklahoma, and Texas. Regional Chief, National Wildlife Refuge System, U.S. Fish and Wildlife Service, Box 1306, 500 Gold Avenue, Albuquerque, New Mexico 87103; Telephone (505) 248–7419.

Region 3—Illinois, Indiana, Iowa, Michigan, Minnesota, Missouri, Ohio, and Wisconsin. Regional Chief, National Wildlife Refuge System, U.S. Fish and Wildlife Service, 1 Federal Drive, Federal Building, Fort Snelling, Twin Cities, Minnesota 55111; Telephone (612)–713–5401.

Region 4—Alabama, Arkansas, Florida, Georgia, Kentucky, Louisiana, Mississippi, North Carolina, South Carolina, Tennessee, Puerto Rico, and the Virgin Islands. Regional Chief, National Wildlife Refuge System, U.S. Fish and Wildlife Service, 1875 Century Boulevard, Atlanta, Georgia 30345; Telephone (404) 679–7166.

Region 5—Connecticut, Delaware, Maine, Maryland, Massachusetts, New Hampshire, New Jersey, New York, Pennsylvania, Rhode Island, Vermont, Virginia, and West Virginia. Regional Chief, National Wildlife Refuge System, U.S. Fish and Wildlife Service, 300 Westgate Center Drive, Hadley, Massachusetts 01035–9589; Telephone (413) 253–8306.

Region 6—Colorado, Kansas, Montana, Nebraska, North Dakota, South

Dakota, Utah, and Wyoming. Regional Chief, National Wildlife Refuge System, U.S. Fish and Wildlife Service, 134 Union Blvd., Lakewood, Colorado 80228; Telephone (303) 236–8145.

Region 7—Alaska. Regional Chief, National Wildlife Refuge System, U.S. Fish and Wildlife Service, 1011 E. Tudor Rd., Anchorage, Alaska 99503; Telephone (907) 786–3545.

Primary Author

Leslie A. Marler, Management Analyst, National Wildlife Refuge System, Division of Conservation Planning and Policy, U.S. Fish and Wildlife Service, Arlington, VA 22203, is the primary author of this rulemaking document.

List of Subjects in 50 CFR Part 32

Fishing, Hunting, Reporting and recordkeeping requirements, Wildlife, Wildlife refuges.

For the reasons set forth in the preamble, we propose to amend Title 50, Chapter I, subchapter C of the Code of Federal Regulations as follows:

PART 32—[AMENDED]

1. The authority citation for part 32 continues to read as follows:

Authority: 5 U.S.C. 301; 16 U.S.C. 460k, 664, 668dd–668ee, and 715i.

2. In § 32.7 ''What refuge units are open to hunting and/or fishing?'' by:

a. Alphabetically adding Grand Bay National Wildlife Refuge in the States of Alabama and Mississippi;

b. Alphabetically adding Sacramento River National Wildlife Refuge, removing ''Salton Sea National Wildlife Refuge'' and alphabetically adding ''Sonny Bono Salton Sea National Wildlife Refuge'' in the State of California;

c. Removing Mark Twain National Wildlife Refuge in the States of Illinois, Iowa, and Missouri;

d. Alphabetically adding Great River National Wildlife Refuge, Middle Mississippi River National Wildlife Refuge, Port Louisa National Wildlife Refuge, and Two Rivers National Wildlife Refuge in the State of Illinois;

e. Alphabetically adding Big Oaks National Wildlife Refuge in the State of Indiana;

f. Alphabetically adding Port Louisa National Wildlife Refuge in the State of Iowa;

g. Alphabetically adding Clarks River National Wildlife Refuge in the State of Kentucky;

h. Alphabetically adding Petit Manan National Wildlife Refuge in the State of Maine;

i. Alphabetically adding Litchfield Wetland Management District in the State of Minnesota;

j. Alphabetically adding Clarence Cannon National Wildlife Refuge, Great River National Wildlife Refuge, Middle Mississippi River National Wildlife Refuge, and Two Rivers National Wildlife Refuge in the State of Missouri; and

k. Removing ''Arid Lands National Wildlife Refuge'' in the State of Washington and alphabetically adding ''Hanford Reach National Monument/ Saddle Mountain National Wildlife Refuge'' to read as follows:

§ 32.7 What refuge unit are open to hunting and/or fishing.

3. In § 32.20 Alabama by alphabetically adding Grand Bay National Wildlife Refuge to read as follows:

§ 32.20 Alabama.

* * * * *

Grand Bay National Wildlife Refuge

Refer to § 32.43 Mississippi for regulations.

* * * * *

4. In § 32.22 Arizona by:

a. Revising paragraph A., adding paragraph B.4., and revising paragraphs C., and D. of Bill Williams River National Wildlife Refuge;

b. Revising paragraph A. of Cibola National Wildlife Refuge; and

c. Revising paragraph A.4.i., adding paragraphs A.4.iii, and A.4.iv., revising paragraph A.5., adding paragraphs A.6., and B.5., and revising paragraph D. of Havasu National Wildlife Refuge to read as follows:

§ 32.22 Arizona.

* * * * *

Bill Williams River National Wildlife Refuge

A. Hunting of Migratory Game Birds. We allow hunting of mourning and white-winged doves on designated areas of the refuge subject to the following conditions:

1. We allow only shotguns.

2. You may possess only nontoxic shot while in the field.

3. You may not hunt within 50 yards (45 m) of any building, road, or levee.

B. Upland Game Hunting. * * *

* * * * *

4. You may not hunt within 50 yards (45 m) of any building, road, or levee.

C. Big Game Hunting. We allow hunting of desert bighorn sheep on designated areas of the refuge with a valid State permit.

D. Sport Fishing. We allow sport fishing in designated areas subject to the following condition: We prohibit personal watercraft (PWC, as defined by State law), air boats, or hovercraft on all waters within the boundaries of the refuge.

* * * * *

Cibola National Wildlife Refuge

A. Hunting of Migratory Game Birds. We allow hunting of geese, ducks, coots, moorhens, common snipe, and mourning and white-winged doves on designated areas of the refuge subject to the following conditions:

1. We allow only shotguns.

2. You may possess only approved nontoxic shot while in the field.

3. You must obtain a permit to enter the Island Unit.

4. You must pay a hunt fee in portions of the refuge. Consult refuge hunting leaflet for locations.

5. We do not allow pit or permanent blinds.

6. You may hunt only during seasons, dates, times, and areas posted by signs and/ or indicated on refuge leaflets, special regulations, and maps available at the refuge office.

7. You must remove all temporary blinds, boats, and decoys from the refuge following each day's hunt.

8. We do not allow hunting within 50 yards (45 m) of any public roads or levees.

9. We close Farm Unit 2 to all hunting except goose hunting during the Arizona waterfowl season.

10. Consult the refuge hunt leaflet for the shot limit.

11. The area known as Pretty Water is open to waterfowl hunting from ½ hour before sunrise to 3:00 p.m. MST during the Arizona and California waterfowl seasons.

12. The Hart Mine Marsh area is open to hunting from 10 a.m. to 3 p.m. daily during goose season.

* * * * *

Havasu National Wildlife Refuge

A. Hunting of Migratory Game Birds. * * *

* * * * *

4. * * *

i. We require a fee for waterfowl hunting, and you must have in your possession proof of payment (refuge permit) while hunting.

* * * * *

iii. Waterfowl hunters must hunt only at the assigned location.

iv. We limit waterfowl hunters to 16 shells each.

5. You must remove temporary blinds, boats, hunting equipment, and decoys from the refuge following each day's hunt.

6. You may not hunt within 50 yards (45m) of any building, road, or levee.

B. Upland Game Hunting. * * *

* * * * *

5. You may not hunt within 50 yards (45 m) of any building, road, or levee.

* * * * *

D. Sport Fishing. We allow fishing on designated areas of the refuge subject to the following conditions:

1. We close designated portions of the Topock Marsh to all entry from October 1 through January 31.

2. We prohibit personal watercraft (PWC, as defined by State law), air boats, or hovercraft on all waters within Topock Marsh or other waters indicated by signs or buoys.

* * * * *

5. In § 32.24 California by:

a. Revising paragraph D. of Delevan National Wildlife Refuge;

b. Revising paragraph A. of Humboldt Bay National Wildlife Refuge;

c. Alphabetically adding Sacramento River National Wildlife Refuge;

d. Revising the heading of ''Salton Sea National Wildlife Refuge'' to read ''Sonny Bono Salton Sea National Wildlife Refuge,'' placing it in appropriate alphabetical order and revising paragraph A.2.;

e. Revising paragraphs A.1. and D.2. of San Luis National Wildlife Refuge; and

f. Revising San Pablo Bay National Wildlife Refuge to read as follows:

§ 32.24 California.

* * * * *

Delevan National Wildlife Refuge

* * * * *

D. Sport Fishing. [Reserved]

* * * * *

Humboldt Bay National Wildlife Refuge

A. Hunting of Migratory Game Birds. We allow hunting of geese (except Canada geese), ducks, coots, common moorhens, and snipe on designated areas of the refuge subject to the following conditions:

1. We allow hunting on Salmon Creek only on Tuesdays and Saturdays from ½ hour before sunrise until 1:00 p.m., and we require a valid refuge daily permit issued prior to each hunt by random drawing.

2. We restrict hunters on Salmon Creek to within 100 feet (30 m) of the assigned hunt site except for placing and retrieving decoys, retrieving downed birds, or traveling to and from the parking area.

3. The Teal Island and Egret Island units of the refuge are open on Saturday, Sunday, Wednesday, Federal holidays, and the opening and closing days of the State waterfowl hunting season.

4. Portions of the Jacoby Creek, Eureka Slough, and Table Bluff units of the refuge are open during the State waterfowl hunting season. We designate the Jacoby Creek and Eureka Slough units boat access only.

5. We require that adults 18 years of age or older accompany hunters under the age of 16.

6. You must unload firearms while transporting them between the parking area and designated blind sites in the Salmon Creek unit.

7. You may possess no more than 25 approved nontoxic shells while in the field.

8. You may use only portable blinds or blinds constructed of vegetation in the free-roam hunting areas.

9. You must remove all blinds, decoys, shell casings, and other personal equipment from the refuge following each day's hunt.

* * * * *

Sacramento River National Wildlife Refuge

A. Hunting of Migratory Game Birds. [Reserved]

B. Upland Game Hunting. [Reserved]

C. Big Game Hunting. [Reserved]

D. Sport Fishing. We allow fishing on Packer Lake subject to the following conditions:

1. Due to primitive access, you may fish only from boats up to 14 feet (4.2 m) long and canoes.

2. You may fish from the western shoreline from sunrise to sunset.

* * * * *

San Luis National Wildlife Refuge

A. Hunting of Migratory Game Birds. * * *

1. You may use only portable blinds or blinds constructed of vegetation in the free-roam hunting area.

* * * * *

D. Sport Fishing. * * *

* * * * *

2. We allow only the use of pole and line or rod and reel, and anglers must attend their equipment at all times.

* * * * *

San Pablo Bay National Wildlife Refuge

A. Hunting of Migratory Game Birds. We allow hunting of geese, ducks, and coots on designated areas of the refuge subject to the following conditions:

1. You may possess only approved nontoxic shot while in the field.

2. Access is by foot, bicycle, and boat only.

3. You must remove all portable blinds, decoys, and personal equipment following each day's hunt.

4. We allow floating blinds on the refuge, and they are available to any hunter on a first-come, first-serve basis. Floating blinds require refuge manager approval or are subject to removal.

5. We prohibit digging into levees and slough channels.

6. We allow only dogs engaged in hunting activities on the refuge during waterfowl season.

B. Upland Game Hunting. We allow hunting of pheasant on designated areas of the refuge in accordance with State hunting regulations and the following conditions:

1. Contact the refuge manager for details.

2. You may possess a maximum of 25 approved nontoxic shot while in the field.

3. Access is by foot and bicycle only.

4. We allow only dogs engaged in hunting activities on the refuge during pheasant season.

C. Big Game Hunting. [Reserved]

D. Sport Fishing. [Reserved]

Sonny Bono Salton Sea National Wildlife Refuge

A. Hunting of Migratory Game Birds. * * *

* * * * *

2. You must hunt from assigned blinds on the Union Tract and within 100 feet (30 m) of blind sites on the Hazard Tract, except when shooting to retrieve crippled birds.

* * * * *

6. In § 32.27 Delaware by revising Prime Hook National Wildlife Refuge to read as follows:

§ 32.27 Delaware.

* * * * *

Prime Hook National Wildlife Refuge

A. Hunting of Migratory Game Birds. We allow hunting of migratory game birds on designated areas of the refuge subject to the following conditions:

1. Consult the refuge hunting brochure for specific information regarding species, areas, and days open to hunting, rules, and regulations.

2. We require a refuge permit and fee for waterfowl hunting.

3. Refuge hunt dates will correspond with State-established migratory game bird seasons.

B. Upland Game Hunting. We allow hunting of upland species on designated areas of the refuge subject to the following conditions:

1. Consult the refuge hunting brochure for specific information regarding species, areas, and days open to hunting, rules, and regulations.

2. You may possess only approved nontoxic shot while in the field.

3. We do not allow upland game hunting beginning March 1 through August 31.

C. Big Game Hunting. We allow hunting of white-tailed deer on designated areas of the refuge subject to the following conditions:

1. Consult the refuge hunting brochure for specific information regarding areas and days open to hunting, rules, and specific regulations.

2. You may use only portable tree stands and must remove them from the refuge following each day's hunt.

3. During the firearm deer season, hunters must wear in a conspicuous manner on head, chest, and back a minimum of 400 square inches (10.16 m2) of solid-colored hunter orange clothing or material.

4. We require a refuge permit and fee for deer hunting.

D. Sport Fishing. We allow fishing and crabbing on designated areas of the refuge subject to the following conditions:

1. Consult refuge regulations regarding access areas, launch points, and motor restrictions.

2. We allow fishing only from sunrise to sunset in all areas except those areas marked by signs as closed to public entry.

7. In § 32.28 Florida by:

a. Adding paragraph D.8. of J. N. ''Ding'' Darling National Wildlife Refuge;

b. Revising paragraphs A.5., A.7., A.8., A.17., and D. of Merritt Island National Wildlife Refuge; and

c. Revising paragraph A. of Ten Thousand Islands National Wildlife Refuge to read as follows:

§ 32.28 Florida.

* * * * *

J. N. ''Ding'' Darling National Wildlife Refuge

* * * * *

D. Sport Fishing. * * *

* * * * *

8. With the exception of those nonregulated species generally used as bait, all fish caught for commercial purposes in the waters of the refuge or transported into the refuge must remain in an intact and

whole condition until removed from the refuge.

* * * * *

Merritt Island National Wildlife Refuge

A. Hunting of Migratory Game Birds. * * *

* * * * *

5. All persons must successfully complete a Firearm Hunter Education course before they may hunt and must possess the Firearm Hunter Education certificate when hunting.

* * * * *

7. We close the refuge between sunset and sunrise except waterfowl hunters may enter at 4:00 a.m. on hunting days with a valid Refuge Hunt Permit.

8. You may not park along Blackpoint Wildlife Drive, Playalinda Beach Road, or Scrub Ridge Trail for the purpose of waterfowl hunting.

* * * * *

17. Boats must not exceed idle speed in Bairs Cove and KARS (Kennedy Athletic Recreational Social Organization) Marina or 8 mph in Haulover Canal.

* * * * *

D. Sport Fishing. You may fish, crab, clam, oyster, and shrimp in designated areas of the refuge subject to the following conditions:

1. We close the refuge between sunset and sunrise except anglers may enter after dark to fish from a boat with a valid Refuge Night Fishing Permit. We allow nighttime boat launching only at Bairs Cove and Beacon 42 Fish Camp. We allow night fishing only in Haulover Canal and the open waters of Mosquito Lagoon, Indian River Lagoon, and Banana River.

2. Anglers must attend their lines at all times.

3. Vehicles must use only designated public access routes and boat launching areas north and south of Haulover Canal.

4. You may not launch boats, crab, or fish from Black Point Wildlife Drive.

5. You may not use air-thrust boats, hovercraft, personal watercraft, or similar craft on refuge waters.

6. You may not use motorized boats in the Banana River Manatee Sanctuary (north of KARS Park on the west side of the Barge Channel and north of the Air Force power line on the east side of the Barge Channel). This includes any boat having an attached motor or a nonattached motor capable of use (including electric trolling motors). This is in effect throughout the year.

7. Boats must not exceed idle speed in Bairs Cove and KARS Marina or 8 mph in Haulover Canal.

8. We prohibit harvest or possession of horseshoe crabs while on the refuge.

* * * * *

Ten Thousand Islands National Wildlife Refuge

A. Hunting of Migratory Game Birds. You may hunt ducks and coots in designated areas of the refuge in accordance with State regulations and subject to the following conditions:

1. We allow hunting only on Wednesday, Saturday, Sunday, Thanksgiving, Christmas, and New Year's Day within the State season from ½ hour before sunrise until noon.

2. You must possess a valid refuge hunt permit at all times while hunting on the refuge.

3. You will need to break down temporary blinds, including those of native vegetation, following each day's hunt. We prohibit the construction of permanent or pit blinds.

4. You must remove decoys, guns, blinds, and boats from the refuge by 1:00 p.m. daily.

5. We allow public hunting only in the area shown on the refuge hunt brochure. We will post closed areas with signs or delineate them by red reflectors on posts along the small road extending south off U.S. 41. Entry into the refuge for hunting may not begin until 4:00 a.m. for designated hunt days.

6. We prohibit air-thrust boats, hovercraft, personal watercraft, and off-road vehicles at all times. We limit watercraft to outboard engines with a maximum of 25 hp.

7. We encourage the use of dogs to retrieve dead or wounded waterfowl. Dogs must remain under the control of their handlers at all times.

8. You may possess only approved nontoxic shot while in the field.

9. We require all guides to purchase and possess a refuge Special Use Permit.

10. We prohibit the possession of alcoholic beverages.

11. Hunters under the age of 16 may hunt only with an adult 21 years of age or older, and they must remain in sight and normal voice contact with the adult.

12. You may take ducks and coots with shotguns only. We prohibit the possession of handguns and other long guns.

* * * * *

8. In § 32.29 Georgia by revising paragraph C. of Okefenokee National Wildlife Refuge to read as follows:

§ 32.29 Georgia.

* * * * *

Okefenokee National Wildlife Refuge

* * * * *

C. Big Game Hunting. We allow hunting of white-tailed deer and feral hog on designated areas of the refuge subject to the following condition: We require a refuge permit for Suwannee Canal Unit.

* * * * *

9. In § 32.31 Idaho by:

a. Revising paragraphs A.1., A.3., A.4., and D.1. of Deer Flat National Wildlife Refuge; and

b. Revising paragraph D. of Minidoka National Wildlife Refuge to read as follows:

§ 32.31 Idaho.

* * * * *

Deer Flat National Wildlife Refuge

A. Hunting of Migratory Game Birds. * * *

1. You may hunt only ducks, coots, and doves on the Lake Lowell sector.

* * * * *

3. Snipe and dove hunters may possess only approved nontoxic shot while in the field.

4. We restrict nonmotorized boats and boats with electric motors only to the area bounded by the water's edge and extending to a point 200 yards (180 m) lakeward in hunting area 1 on the Lake Lowel sector.

* * * * *

D. Sport Fishing. * * *

1. During the waterfowl season, we allow fishing only within the area bounded by the water's edge extending to a point 200 yards (180 m) lakeward in front of the Lower Dam, fishing area A and in front of the Upper Dam, and fishing area B on the Lake Lowell sector.

* * * * *

Minidoka National Wildlife Refuge

* * * * *

D. Sport Fishing. We allow sport fishing on designated areas of the refuge subject to the following conditions:

1. We allow fishing from boats on the main reservoir from Minidoka Dam to the west tip of Bird Island, April 1 through September 30.

2. We allow fishing from boats within boating lanes at Smith and Gifford Springs year around.

3. We allow bank fishing all year.

10. In § 32.32 Illinois by:

a. Alphabetically adding Great River National Wildlife Refuge;

b. Removing Mark Twain National Wildlife Refuge;

c. Alphabetically adding Middle Mississippi River National Wildlife Refuge;

d. Alphabetically adding Port Louisa National Wildlife Refuge;

e. Alphabetically adding Two Rivers National Wildlife Refuge; and

f. Revising paragraphs A.1., B.1., B.2., B.3., C.1., C.2., C.3., D.1. and D.2. of Upper Mississippi River National Wildlife and Fish Refuge to read as follows:

§ 32.32 Illinois.

* * * * *

Great River National Wildlife Refuge

A. Hunting of Migratory Game Birds. We allow hunting of migratory game birds on designated areas of the refuge subject to brochures and posted regulations.

B. Upland Game Hunting. We allow hunting of upland game on designated areas of the refuge subject to brochures and posted regulations.

C. Big Game Hunting. We allow hunting of white-tailed deer on designated areas of the refuge subject to brochures and posted regulations.

D. Sport Fishing. We allow fishing on designated areas of the refuge subject to brochures and posted regulations.

* * * * *

Middle Mississippi River National Wildlife Refuge

A. Hunting of Migratory Game Birds. We allow hunting of migratory game birds on designated areas of the refuge subject to brochures and posted regulations.

B. Upland Game Hunting. We allow hunting of upland game on designated areas

of the refuge subject to brochures and posted regulations.

C. Big Game Hunting. We allow hunting of white-tailed deer on designated areas of the refuge subject to brochures and posted regulations.

D. Sport Fishing. We allow fishing on designated areas of the refuge subject to brochures and posted regulations.

Port Louisa National Wildlife Refuge

A. Hunting of Migratory Game Birds. We allow hunting of migratory game birds on designated areas of the refuge subject to brochures and posted regulations.

B. Upland Game Hunting. We allow hunting of upland game on designated areas of the refuge subject to brochures and posted regulations.

C. Big Game Hunting. We allow hunting of white-tailed deer on designated areas of the refuge subject to brochures and posted regulations.

D. Sport Fishing. We allow fishing on designated areas of the refuge subject to brochures and posted regulations.

Two Rivers National Wildlife Refuge

A. Hunting of Migratory Game Birds. [Reserved]

B. Upland Game Hunting. We allow hunting of upland game on designated areas of the refuge subject to brochures and posted regulations.

C. Big Game Hunting. [Reserved]

D. Sport Fishing. We allow fishing on designated areas of the refuge subject to brochures and posted regulations.

Upper Mississippi River National Wildlife and Fish Refuge

A. Hunting of Migratory Game Birds. * * *

1. In areas posted ''Area Closed'' or ''No Hunting Zone,'' we prohibit hunting of migratory game birds at any time.

* * * * *

B. Upland Game Hunting. * * *

1. In areas posted ''No Hunting Zone,'' we prohibit hunting or possession of firearms at all times.

2. In areas posted ''Area Closed,'' we only allow hunting beginning the day after the close of the applicable State duck hunting season until upland game season closure or March 15, whichever occurs first, except we allow spring turkey hunting during State seasons.

3. On areas open to hunting, we prohibit hunting or possession of firearms from March 16 until the opening of State fall hunting seasons, except we allow spring turkey hunting during State seasons.

* * * * *

C. Big Game Hunting. * * *

1. In areas posted ''No Hunting Zone,'' we prohibit hunting or possession of firearms at all times.

2. In areas posted ''Area Closed,'' we only allow hunting beginning the day after the close of the applicable State duck hunting season until big game season closure or March 15, whichever occurs first.

3. On areas open to hunting, we only allow hunting or possession of firearms until season closure or March 15, whichever occurs first.

* * * * *

D. Sport Fishing. * * *

1. On Spring Lake Closed Areas, Carroll County, Illinois, we prohibit fishing from October 1 until the day after the close of the State duck hunting season.

2. On Mertes Slough, Buffalo County, Wisconsin, we allow only hand-powered boats or boats with electric motors.

11. In § 32.33 Indiana by alphabetically adding Big Oaks National Wildlife Refuge to read as follows:

§ 32.33 Indiana.

* * * * *

Big Oaks National Wildlife Refuge

A. Hunting of Migratory Game Birds. [Reserved]

B. Upland Game Hunting. [Reserved]

C. Big Game Hunting. We allow hunting of white-tailed deer and turkey on designated areas of the refuge subject to the following condition: We require a refuge access permit.

D. Sport Fishing. We allow fishing on designated areas of the refuge subject to the following condition: We require a refuge access permit.

* * * * *

12. In § 32.34 Iowa by:

a. Revising paragraphs B. and C. of Driftless Area National Wildlife Refuge;

b. Removing Mark Twain National Wildlife Refuge;

c. Revising paragraph B. of Neal Smith National Wildlife Refuge;

d. Alphabetically adding Port Louisa National Wildlife Refuge; and

e. Revising Union Slough National Wildlife Refuge to read as follows:

§ 32.34 Iowa.

* * * * *

Driftless Area National Wildlife Refuge

* * * * *

B. Upland Game Hunting. We allow hunting of upland game on designated areas of the refuge subject to the following conditions:

1. In areas posted ''Area Closed,'' we prohibit entry, including hunting.

2. In areas open to hunting, we allow hunting beginning November 1 until the close of State hunting seasons or January 15, whichever occurs first.

3. You may possess only approved nontoxic shot while hunting for any allowed birds or other small game.

C. Big Game Hunting. We allow hunting of white-tailed deer on designated areas of the refuge subject to the following conditions:

1. In areas posted ''Area Closed,'' we prohibit all public entry, including hunting.

2. In areas open to hunting, we allow hunting beginning November 1 until the close of State hunting seasons or January 15, whichever occurs first.

3. We allow archery and muzzleloader hunting only.

4. We allow deer drives only during lawful party hunting conducted within the refuge, in accordance with State regulations. We prohibit driving deer from or through the refuge to any persons hunting outside the refuge boundary.

5. We do not allow construction or use of permanent blinds, platforms, or ladders.

6. You must remove all stands from the refuge following each day's hunt.

* * * * *

Neal Smith National Wildlife Refuge

* * * * *

B. Upland Game Hunting. We allow hunting of ringnecked pheasant, bobwhite quail, cottontail rabbit, and squirrel on designated areas of the refuge subject to the following conditions:

1. You may possess only approved nontoxic shot while hunting for any permitted birds or other small game.

2. We allow hunting only during the dates posted at the refuge.

3. All hunters must wear one or more of the following articles of visible, external, solid-blaze-orange clothing: a hat, vest, coat, jacket, sweatshirt, sweater, shirt, or coveralls.

* * * * *

Port Louisa National Wildlife Refuge

Refer to § 32.32 Illinois for regulations.

Union Slough National Wildlife Refuge

A. Hunting of Migratory Game Birds. We allow hunting of migratory game birds on designated areas of the refuge subject to brochures and posted regulations.

B. Upland Game Hunting. We allow upland game hunting on designated areas of the refuge subject to brochures and posted regulations.

C. Big Game Hunting. We allow big game hunting on designated areas of the refuge subject to brochures and posted regulations.

D. Sport Fishing. We allow fishing on designated areas of the refuge subject to brochures and posted regulations.

* * * * *

13. In § 32.36 Kentucky by alphabetically adding Clarks River National Wildlife Refuge to read as follows:

§ 32.36 Kentucky.

* * * * *

Clarks River National Wildlife Refuge

A. Hunting of Migratory Game Birds. We allow hunting of geese, ducks, coots, woodcock, snipe, and mourning doves on designated areas of the refuge subject to State regulations and the following conditions:

1. Hunting of waterfowl will cease at 2:00 p.m. each day of open season.

2. You may use only portable or temporary blinds.

3. You must remove portable or temporary blinds and decoys from the refuge following each day's hunt.

4. You may possess only approved nontoxic shot while hunting waterfowl in the field.

5. The refuge is a day-use area only with the exception of legal hunting activities.

6. We prohibit the use of all-terrain vehicles on all refuge hunts.

7. We prohibit target practice on refuge property.

8. We prohibit mules and horses on refuge hunts.

9. You must unload and encase or dismantle firearms before transporting them in a vehicle or boat within the boundaries of the refuge or along rights-of-way for public or private land within the refuge.

10. Each hunter must have in his/her possession a current, signed copy of the Clarks River National Wildlife Refuge Hunting/Fishing Permit while participating in refuge hunts.

B. Upland Game Hunting. We allow hunting of quail, squirrel, rabbit, raccoon, opossum, bobcat and coyote on designated areas of the refuge subject to State regulations and the following conditions:

1. We prohibit mules and horses on refuge hunts.

2. We prohibit all-terrain vehicles on all refuge hunts.

3. The refuge is a day-use area only with the exception of legal hunting activities.

4. We prohibit target practice on refuge property.

5. We limit shotguns to no larger than 10 gauge. All shotgun ammunition must meet legal shot-size requirements for each hunted species. We limit the use of rifles and pistols to rimfire only for upland game.

6. You must unload and encase or dismantle firearms before transporting them in a vehicle or boat within the boundaries of the refuge or along rights-of-way for public or private land within the refuge.

7. You must have in your possession a current, signed copy of the Clarks River National Wildlife Refuge Hunting/Fishing Permit while participating in refuge hunts.

C. Big Game Hunting. We allow hunting of white-tailed deer and turkey on designated areas of the refuge subject to State regulations and the following conditions:

1. We prohibit the use or construction of any permanent tree stand.

2. We allow portable stands and climbing stands, but you must remove them from the tree when they are not in use.

3. We require safety belts at all times with the use of tree stands.

4. The refuge is a day-use area only with the exception of legal hunting activities.

5. We prohibit the use of all-terrain vehicles on all refuge hunts.

6. We prohibit mules and horses on refuge hunts.

7. You may not hunt by organized deer drives of two or more hunters. The definition of drive is: the act of chasing, pursuing, disturbing, or otherwise directing deer so as to make the animals more susceptible to harvest.

8. We prohibit target practice on refuge property.

9. You must unload and encase or dismantle firearms before transporting them in a vehicle or boat within the boundaries of the refuge or along rights-of-way for public or private land within the refuge.

10. You must have in your possession a current, signed copy of the Clarks River National Wildlife Refuge Hunting/Fishing Permit while participating in refuge hunts.

D. Sport Fishing. We allow sport fishing on designated areas of the refuge subject to State regulations, any refuge-specific regulations listed in the Clarks River National Wildlife Refuge Hunting/Fishing Permit, and the following conditions:

1. The refuge is a day-use area only with the exception of legal fishing activities.

2. You must have in your possession a current, signed copy of the Clarks River National Wildlife Refuge Hunting/Fishing Permit while fishing on the refuge.

* * * * *

14. In § 32.37 Louisiana by:

a. Adding paragraphs A.3., B.3., and C.3., and revising paragraph D.2. of Atchafalaya National Wildlife Refuge;

b. Revising paragraphs A. and D.1. of Bayou Cocodrie National Wildlife Refuge;

c. Revising the introductory text of paragraph A., paragraph A.1., the introductory text of paragraph B., and paragraphs B.1., C.1., and D.1. of Lake Ophelia National Wildlife Refuge; and

d. Revising paragraphs A., B., and C. of Upper Ouachita National Wildlife Refuge to read as follows:

§ 32.37 Louisiana.

* * * * *

Atchafalaya National Wildlife Refuge

A. Hunting of Migratory Game Birds. * * *

* * * * *

3. For the Shatters Bayou Unit, hunting must be in accordance with the Attakapas Wildlife Management Area rules and regulations.

B. Upland Game Hunting. * * *

* * * * *

3. For the Shatters Bayou Unit, hunting must be in accordance with the Attakapas Wildlife Management Area rules and regulations.

C. Big Game Hunting. * * *

* * * * *

3. For the Shatters Bayou Unit, hunting must be in accordance with the Attakapas Wildlife Management Area rules and regulations.

D. Sport Fishing. * * *

* * * * *

2. For the Indian Bayou and Shatters Bayou Unit, we require an Army Corps of Engineers permit for commercial shellfishing.

Bayou Cocodrie National Wildlife Refuge

A. Hunting of Migratory Game Birds. You may hunt ducks, coots, woodcock, and snipe on designated areas of the refuge subject to the following condition: We require a refuge permit.

* * * * *

D. Sport Fishing. * * *

1. Anglers must possess a refuge permit.

* * * * *

Lake Ophelia National Wildlife Refuge

A. Hunting of Migratory Game Birds. We allow hunting of ducks, geese, coots, woodcock, and snipe on designated areas of the refuge subject to the following conditions:

1. We require a refuge permit.

* * * * *

B. Upland Game Hunting. We allow hunting of squirrel, rabbit, raccoon, feral hog, beaver, nutria, and coyote on designated areas of the refuge subject to the following conditions:

1. We require a refuge permit.

* * * * *

C. Big Game Hunting. * * *

1. We require a refuge permit.

* * * * *

D. Sport Fishing. * * *

1. We require a refuge permit.

* * * * *

Upper Ouachita National Wildlife Refuge

A. Hunting of Migratory Game Birds. We allow hunting of ducks, geese, coots, mourning doves, and woodcock on designated areas of the refuge subject to the following condition: We require a refuge permit.

B. Upland Game Hunting. We allow hunting of quail, squirrel, rabbit, raccoon, and opossum on designated areas of the refuge subject to the following condition: We require a refuge permit.

C. Big Game Hunting. We allow hunting of white-tailed deer on designated areas of the refuge subject to the following condition: We require a refuge permit.

* * * * *

15. In § 32.38 Maine by alphabetically adding Petit Manan National Wildlife Refuge to read as follows:

§ 32.38 Maine.

* * * * *

Petit Manan National Wildlife Refuge

A. Hunting of Migratory Game Birds. We allow hunting of ducks, geese, woodcock, rails, gallinules, and snipe on designated areas of the refuge subject to the following conditions:

1. You may not erect permanent waterfowl blinds on the refuge.

2. You must remove all temporary blinds, concealment materials, boats, and decoys following each day's hunt.

B. Upland Game Hunting. We allow hunting of upland game on designated areas of the refuge subject to the following conditions:

1. You may possess only approved nontoxic shot while in the field.

2. We prohibit the use of pursuit or trailing dogs on the refuge.

3. We prohibit the hunting of crows on the refuge.

4. The refuge will be open to hunting of coyotes no earlier than November 1 and no later than March 31.

C. Big Game Hunting. We allow hunting of white-tailed deer and bear on designated areas of the refuge subject to the following conditions:

1. We prohibit the use of pursuit or trailing dogs on the refuge.

2. We allow black bear hunting only during the firearm season for white-tailed deer.

3. You must remove all tree stands by the last day of the white-tailed deer hunting season.

4. We close the refuge to all visitation from sunrise to sunset. However, during hunting season, we allow hunters to enter the refuge ½ hour prior to sunrise and remain on the refuge ½ hour after sunset.

D. Sport Fishing. [Reserved]

* * * * *

16. In § 32.40 Massachusetts by revising paragraph D.1. of Parker River National Wildlife Refuge to read as follows:

§ 32.40 Massachusetts.

* * * * *

Parker River National Wildlife Refuge

* * * * *

D. Sport Fishing. [Reserved]

* * * * *

1. We allow saltwater fishing on the ocean beach and the surrounding waters of the Broad Sound.

* * * * *

17. In § 32.42 Minnesota by:

a. Revising Fergus Falls Wetland Management District;

b. Alphabetically adding Litchfield Wetland Management District; and

c. Revising paragraphs A., B., and C., in Windom Wetland Management District to read as follows:

§ 32.42 Minnesota.

* * * * *

Fergus Falls Wetland Management District

A. Hunting of Migratory Game Birds. We allow hunting of migratory game birds throughout the district except that we allow no hunting on the Townsend, Headquarters, Mavis, and Gilmore Waterfowl Production Areas (WPA) in Otter Tail County, and Larson WPA in Douglas County.

B. Upland Game Hunting. We allow upland game hunting throughout the district except that we allow no hunting on the Townsend, Headquarters, Mavis, and Gilmore WPAs in Otter Tail County, and Larson WPA in Douglas County.

C. Big Game Hunting. We allow big game hunting throughout the district except that we allow no hunting on the Townsend, Headquarters, Mavis, and Gilmore WPAs in Otter Tail County, and Larson WPA in Douglas County.

D. Sport Fishing. We allow sport fishing throughout the district except that we allow no fishing on the Townsend, Headquarters, Mavis, and Gilmore WPAs in Otter Tail County, and Larson WPA in Douglas County.

Litchfield Wetland Management District

A. Hunting of Migratory Game Birds. We allow hunting of migratory game birds throughout the district subject to the following conditions:

1. You must remove boats, decoys, and other personal property following each day's hunt.

2. You must remove portable or temporary blinds and any material brought onto the area for blind construction following each day's hunt.

B. Upland Game Hunting. We allow upland game hunting throughout the district.

C. Big Game Hunting. We allow big game hunting throughout the district subject to the following conditions:

1. We do not allow construction or use of permanent blinds, stands, or platforms.

2. You must remove all temporary blinds, stands, or platforms following each day's hunt.

D. Sport Fishing. We allow fishing throughout the district.

* * * * *

Windom Wetland Management District

A. Hunting of Migratory Game Birds. We allow hunting of migratory game birds throughout the district except that you may not hunt on the Worthington Waterfowl Production Area (WPA) in Nobles County, Headquarters WPA in Jackson County, or designated portions of the Wolf Lake WPA in Cottonwood County.

B. Upland Game Hunting. We allow hunting of upland game throughout the district except that you may not hunt on the Worthington WPA in Nobles County, Headquarters WPA in Jackson County, or designated portions of the Wolf Lake WPA in Cottonwood County.

C. Big Game Hunting. We allow hunting of big game throughout the district except that you may not hunt on the Worthington WPA in Nobles County, Headquarters WPA in Jackson County, or designated portions of the Wolf Lake WPA in Cottonwood County.

* * * * *

18. In § 32.43 Mississippi by:

a. Alphabetically adding Grand Bay National Wildlife Refuge;

b. Revising Hillside National Wildlife Refuge;

c. Revising Mathews Brake National Wildlife Refuge;

d. Revising Morgan Brake National Wildlife Refuge;

e. Revising Panther Swamp National Wildlife Refuge; and

f. Revising Yazoo National Wildlife Refuge to read as follows:

§ 32.43 Mississippi.

* * * * *

Grand Bay National Wildlife Refuge

A. Hunting of Migratory Game Birds. We allow hunting of geese, ducks, coots, and mourning doves on designated areas of the refuge subject to State regulations and the following conditions:

1. Hunting of waterfowl will cease at 2:00 p.m. each day of open season.

2. You may use only portable or temporary blinds.

3. You must remove portable or temporary blinds and decoys from the refuge following each day's hunt.

4. You may possess only approved nontoxic shot while hunting waterfowl in the field.

5. The refuge is a day-use area only with the exception of legal hunting activities.

6. We prohibit the use of all-terrain vehicles on all refuge hunts.

7. We prohibit target practice on refuge property.

8. We prohibit mules and horses on refuge hunts.

9. You must unload and encase or dismantle firearms before transporting them in a vehicle or boat within the boundaries of the refuge or along rights-of-way for public or private land within the refuge.

10. Each hunter must have in his/her possession a current, signed copy of the Grand Bay National Wildlife Refuge Hunting Permit while participating in refuge hunts.

B. Upland Game Hunting. We allow hunting of squirrel on designated areas of the refuge subject to State regulations and the following conditions:

1. We prohibit mules and horses on refuge hunts.

2. We prohibit the use of all-terrain vehicles on all refuge hunts.

3. The refuge is a day-use area only with the exception of legal hunting activities.

4. We prohibit target practice on refuge property.

5. We limit shotguns to no larger than 10 gauge. All shotgun ammunition must meet legal shot-size requirements.

6. You must unload and encase or dismantle firearms before transporting them in a vehicle or boat within the boundaries of the refuge or along rights-of-way for public or private land within the refuge.

7. Each hunter must have in his/her possession a current, signed copy of the Grand Bay National Wildlife Refuge Hunting Permit while participating in refuge hunts.

C. Big Game Hunting. We allow hunting of white-tailed deer and feral hog on designated areas of the refuge subject to State regulations and the following conditions:

1. We prohibit the use or construction of any permanent tree stand.

2. We allow portable and climbing stands, but you must remove them from the tree when not in use or they will be subject to confiscation.

3. We require safety belts at all times with the use of tree stands.

4. The refuge is a day-use area only with the exception of legal hunting activities.

5. We prohibit the use of all-terrain vehicles on all refuge hunts.

6. We prohibit the use of mules and horses on refuge hunts.

7. You may not hunt by organized deer drives of two or more hunters. The definition of drive is: the act of chasing, pursuing, disturbing, or otherwise directing deer so as to make the animals more susceptible to harvest.

8. We prohibit target practice on refuge property.

9. You must unload and encase or dismantle firearms before transporting them in a vehicle or boat within the boundaries of the refuge or along rights-of-way for public or private land within the refuge.

10. You must have in your possession a current, signed copy of the Grand Bay National Wildlife Refuge Hunting Permit while participating in refuge hunts.

D. Sport Fishing. [Reserved]

Hillside National Wildlife Refuge

A. Hunting of Migratory Game Birds. We allow hunting of mourning doves, waterfowl, and coots on designated areas of the refuge

subject to the following condition: We require a refuge permit.

B. Upland Game Hunting. We allow hunting of quail, rabbit, squirrel, and raccoon on designated areas of the refuge subject to the following condition: We require a refuge permit.

C. Big Game Hunting. We allow hunting of white-tailed deer on designated areas of the refuge subject to the following condition: We require a refuge permit.

D. Sport Fishing. We allow fishing and frogging in designated portions of the refuge subject to the following condition: We require a refuge permit.

Mathews Brake National Wildlife Refuge

A. Hunting of Migratory Game Birds. We allow hunting of mourning doves, waterfowl, and coots on designated areas of the refuge subject to the following condition: We require a refuge permit.

B. Upland Game Hunting. We allow hunting of quail, rabbit, squirrel, and raccoon on designated areas of the refuge subject to the following condition: We require a refuge permit.

C. Big Game Hunting. We allow hunting of white-tailed deer on designated areas of the refuge subject to the following condition: We require a refuge permit.

D. Sport Fishing. We allow fishing and frogging on designated portions of the refuge subject to the following condition: We require a refuge permit.

Morgan Brake National Wildlife Refuge

A. Hunting of Migratory Game Birds. We allow hunting of mourning doves, waterfowl, and coots on designated areas of the refuge subject to the following condition: We require a refuge permit.

B. Upland Game Hunting. We allow hunting of quail, rabbit, squirrel, and raccoon on designated areas of the refuge subject to the following condition: We require a refuge permit.

C. Big Game Hunting. We allow hunting of white-tailed deer on designated areas of the refuge subject to the following condition: We require a refuge permit.

D. Sport Fishing. We allow fishing and frogging in designated portions of the refuge subject to the following condition: We require a refuge permit.

* * * * *

Panther Swamp National Wildlife Refuge

A. Hunting of Migratory Game Birds. We allow hunting of mourning doves, waterfowl, and coots on designated areas of the refuge subject to the following condition: We require a refuge permit.

B. Upland Game Hunting. We allow hunting of quail, rabbit, squirrel, and raccoon on designated areas of the refuge subject to the following condition: We require a refuge permit.

C. Big Game Hunting. We allow hunting of white-tailed deer and turkey on designated areas of the refuge subject to the following condition: We require a refuge permit.

D. Sport Fishing. We allow fishing and frogging in designated portions of the refuge subject to the following condition: We require a refuge permit.

* * * * *

Yazoo National Wildlife Refuge

A. Hunting of Migratory Game Birds. We allow hunting of waterfowl on designated areas of the refuge subject to the following condition: We require a refuge permit. Please consult the refuge brochure for species information.

B. Upland Game Hunting. We allow hunting of rabbit, squirrel, and raccoon on designated areas of the refuge subject to the following condition: We require a refuge permit.

C. Big Game Hunting. We allow hunting of white-tailed deer and turkey on designated areas of the refuge subject to the following condition: We require a refuge permit.

D. Sport Fishing. [Reserved]

19. In § 32.44 Missouri by:

a. Alphabetically adding Clarence Cannon National Wildlife Refuge;

b. Alphabetically adding Great River National Wildlife Refuge;

c. Removing Mark Twain National Wildlife Refuge;

c. Alphabetically adding Middle Mississippi River National Wildlife Refuge; and

d. Alphabetically adding Two Rivers National Wildlife Refuge to read as follows:

§ 32.44 Missouri.

* * * * *

Clarence Cannon National Wildlife Refuge

A. Hunting of Migratory Game Birds. [Reserved]

B. Upland Game Hunting. [Reserved]

C. Big Game Hunting. We allow hunting of white-tailed deer on designated areas of the refuge subject to posted regulations.

D. Sport Fishing. We allow fishing on designated areas of the refuge subject to posted regulations.

Great River National Wildlife Refuge

Refer to § 32.32 Illinois for regulations.

Middle Mississippi River National Wildlife Refuge

Refer to § 32.32 Illinois for regulations.

* * * * *

Two Rivers National Wildlife Refuge

Refer to § 32.32 Illinois for regulations.

20. In § 32.47 Nevada by revising paragraphs A. and D. of Ruby Lake National Wildlife Refuge to read as follows:

§ 32.47 Nevada.

* * * * *

Ruby Lake National Wildlife Refuge

A. Hunting of Migratory Game Birds. We allow hunting of geese, ducks, coots, moorhens, and snipe on designated areas of the refuge in accordance with State laws and subject to the following conditions:

1. The refuge is open to the public from 1 hour before sunrise until 2 hours after sunset.

2. We do not allow off-road vehicles on the refuge.

3. We do not allow permanent or pit blinds on the refuge. You must remove all blind materials and decoys following each day's hunt.

* * * * *

D. Sport Fishing. We allow fishing on designated areas of the refuge in accordance with State laws and subject to the following conditions:

1. The refuge is open to the public from 1 hour before sunrise until 2 hours after sunset.

2. We allow fishing only from the dikes in the areas north of the Brown Dike and east of the Collection Ditch, with the exception that you may fish from foot-propelled, personal flotation devices (float tubes) in designated areas.

3. We prohibit fishing from the bank on the South Marsh except at Brown Dike, the Main Boat Landing, and Narciss Boat Landing.

4. You may use only artificial lures in the Collection Ditch and spring ponds adjoining the ditch.

5. We do not allow boats on the refuge beginning January 1 through June 14.

6. During the boating season, we allow boats only on the South Marsh. Beginning June 15 through July 31, we allow only motorless boats or boats with battery-powered electric motors. Beginning August 1 through December 31, we allow only motorless boats and boats propelled by motors with a total of 10 hp or less.

7. You may launch boats only from designated landings.

8. We do not allow storage of boats of any kind on the refuge beginning January 1 through May 31.

9. We do not allow off-road vehicles on the refuge.

* * * * *

21. In § 32.49 New Jersey by revising paragraphs A., C.5., and D. of Supawna Meadows National Wildlife Refuge to read as follows:

§ 32.49 New Jersey.

* * * * *

Supawna Meadows National Wildlife Refuge

A. Hunting of Migratory Game Birds. We allow hunting of geese and ducks on designated areas of the refuge during designated refuge seasons subject to the following conditions:

1. We allow loaded and uncased firearms in an unanchored boat only when retrieving crippled birds.

2. You must remove all hunting blind materials, boats, and decoys following each day's hunt. We do not allow permanent blinds.

3. You may possess only approved nontoxic shot while in the field.

* * * * *

C. Big Game Hunting. * * *

* * * * *

5. You may use only single-projectile ammunition when hunting from a stand elevated at least 6 feet (1.8 m) above ground level and only in firearms equipped with adjustable sights or a scope. Hunters may use buckshot when hunting from the ground or from stands less than 6 feet above ground level.

D. Sport Fishing. We allow fishing and crabbing on the refuge in designated areas subject to the following conditions:

1. We prohibit the taking of frogs, salamanders, and turtles from all nontidal waters and refuge lands.
2. We prohibit fishing in designated nontidal waters from sunset to sunrise.
3. We prohibit bow fishing in nontidal waters.

* * * * *

22. In § 32.50 New Mexico by:

a. Revising Bitter Lake National Wildlife Refuge; and

b. Revising paragraph C. of Bosque del Apache National Wildlife Refuge to read as follows:

§ 32.50 New Mexico.

* * * * *

Bitter Lake National Wildlife Refuge

A. Hunting of Migratory Game Birds. We allow hunting of geese, ducks, coots, mourning doves, and sandhill cranes on designated areas of the refuge subject to the following conditions:

1. You may hunt during seasons, dates, times, and areas posted by signs and/or indicated on refuge leaflets, special regulations, and maps available at the refuge office.
2. You may possess only approved nontoxic shot while in the field.
3. We do not allow pit or permanent blinds.
4. Neither hunters nor dogs may enter closed areas to retrieve game.

B. Upland Game Hunting. We allow hunting of pheasant, quail, cottontail, and jack rabbit on designated areas of the refuge subject to the following conditions:

1. We allow hunting during seasons, dates, times, and areas as posted by signs and/or indicated on refuge leaflets, special regulations, and maps available at the refuge office.
2. You may possess only approved nontoxic shot while in the field.

C. Big Game Hunting. We allow hunting of mule deer and white-tailed deer on designated areas of the refuge subject to the following condition: We allow hunting during seasons, dates, times, and areas as posted by signs and/or indicated on refuge leaflets, special regulations, and maps available at the refuge office.

D. Sport Fishing. [Reserved]

Bosque del Apache National Wildlife Refuge

* * * * *

C. Big Game Hunting. We allow hunting of mule deer on designated areas of the refuge subject to the following conditions:

1. Refer to refuge map for designated areas.
2. Hunts are subject to State regulations and seasons.

* * * * *

23. In § 32.52 North Carolina by:

a. Revising paragraph D. of Pea Island National Wildlife Refuge; and

b. Revising paragraphs A., B.1., and C. of Roanoke River National Wildlife Refuge to read as follows:

§ 32.52 North Carolina.

* * * * *

Pea Island National Wildlife Refuge

* * * * *

D. Sport Fishing. We allow fishing and crabbing on designated areas of the refuge subject to the following conditions:

1. We prohibit fishing and crabbing in North Pond, South Pond, and Newfield impoundments.
2. We require a refuge permit for night fishing.

* * * * *

Roanoke River National Wildlife Refuge

A. Hunting of Migratory Game Birds. We allow hunting of ducks and coots on designated areas of the refuge subject to the following condition: We require a State-issued refuge permit.

B. Upland Game Hunting. * * *

1. We require a State-issued refuge permit.

* * * * *

C. Big Game Hunting. We allow hunting of white-tailed deer and turkey on designated areas of the refuge subject to the following condition: We require a State-issued refuge permit.

* * * * *

24. In § 32.53 North Dakota by:

a. Revising Lake Alice National Wildlife Refuge;

b. Revising paragraph C.2. of Long Lake National Wildlife Refuge; and

c. Revising paragraph C. of Slade National Wildlife Refuge to read as follows:

§ 32.53 North Dakota.

* * * * *

Lake Alice National Wildlife Refuge

A. Hunting of Migratory Game Birds. We allow hunting of geese, tundra swans, ducks, coots, and mourning doves on designated areas of the refuge; consult refuge publication.

B. Upland Game Hunting. We allow upland game and furbearer hunting on designated portions of the refuge at certain times of the year; consult refuge publication.

C. Big Game Hunting. We allow special refuge permit holders to hunt deer and fox with rifles during the State firearm deer season on designated portions of the refuge subject to the following conditions:

1. We allow fox hunting on certain areas of the refuge outside of the State firearm deer season without a special refuge permit; consult refuge publication.
2. We allow archery hunting on designated portions of the refuge; consult refuge publication.

D. Sport Fishing. [Reserved]

* * * * *

Long Lake National Wildlife Refuge

* * * * *

C. Big Game Hunting.

* * * * *

2. We restrict archery hunters to the portions of the refuge open to firearm deer hunting during the State firearm deer season. Prior to and following the firearm deer season, we open additional refuge areas as designated to archery deer hunting.

* * * * *

Slade National Wildlife Refuge

* * * * *

C. Big Game Hunting. We allow hunting of deer on designated areas of the refuge subject to the following condition: Hunters may enter the refuge on foot only.

* * * * *

25. In § 32.55 Oklahoma by:

a. Revising paragraphs A., B., C., and revising the introductory text of paragraph D. and paragraph D.1. of Deep Fork National Wildlife Refuge;

b. Adding paragraph A.6., revising paragraph B.5., the introductory text of paragraph C. and paragraph C.1., adding paragraphs C.3. and C.4., and revising the introductory text of paragraph D. and paragraph D.1. of Little River National Wildlife Refuge; and

c. Adding paragraph B.3. of Washita National Wildlife Refuge to read as follows:

§ 32.55 Oklahoma.

* * * * *

Deep Fork National Wildlife Refuge

A. Hunting of Migratory Game Birds. You may hunt ducks in designated areas of the refuge subject to the following condition: You must possess a refuge permit.

B. Upland Game Hunting. You may hunt squirrel, rabbit, and raccoon in designated areas of the refuge subject to the following condition: You must possess a refuge permit.

C. Big Game Hunting. You may hunt white-tailed deer in designated areas of the refuge subject to the following condition: You must possess a refuge permit.

D. Sport Fishing. You may sport fish on the refuge in designated areas subject to the following conditions:

1. The refuge is open to fishing as specified in refuge leaflets, special regulations, permits, maps or as posted on signs.

* * * * *

Little River National Wildlife Refuge

A. Hunting of Migratory Game Birds. * * *

* * * * *

6. You must obtain a refuge permit.

B. Upland Game Hunting. * * *

* * * * *

5. You must obtain a refuge permit.

C. Big Game Hunting. You may hunt deer and feral hog on designated areas of the refuge subject to the following conditions:

1. Deer hunters must obtain a refuge permit and pay fees.

* * * * *

3. You may hunt feral hog during any established refuge hunting season. Refuge permits and legal weapons apply as for the current hunting season.
4. You must obtain a refuge permit.

D. Sport Fishing. We allow fishing on designated areas of the refuge subject to the following conditions:

1. You may fish from sunrise to sunset.

* * * * *

Washita National Wildlife Refuge

* * * * *

B. Upland Game Hunting.

* * * * *

3. You may possess only approved nontoxic shot while in the field.

* * * * *

26. In § 32.56 Oregon by revising paragraphs A.1. and C. of Malheur National Wildlife Refuge to read as follows:

§ 32.56 Oregon.

* * * * *

Malheur National Wildlife Refuge

A. Hunting of Migratory Game Birds. * * *

1. We allow only nonmotorized boats or boats with electric motors.

* * * * *

C. Big Game Hunting. We allow hunting of deer and pronghorn during the authorized State seasons on the refuge area west of Highway 205 and south of Foster Road.

* * * * *

27. In § 32.57 Pennsylvania by revising paragraph B.1. of Erie National Wildlife Refuge to read as follows:

§ 32.57 Pennsylvania.

* * * * *

Erie National Wildlife Refuge

* * * * *

B. Upland Game Hunting. * * *

1. We require refuge permits for hunting fox, raccoon, and coyote.

* * * * *

28. In § 32.60 South Carolina by revising paragraphs A., B., and C., of Santee National Wildlife Refuge to read as follows:

§ 32.60 South Carolina.

* * * * *

Santee National Wildlife Refuge

A. Hunting of Migratory Game Birds. We allow hunting of mourning doves on designated areas of the refuge subject to the following condition: We require a refuge permit.

B. Upland Game Hunting. We allow hunting on designated areas of the refuge subject to the following condition: We require a refuge permit.

C. Big Game Hunting. We allow hunting of white-tailed deer on designated areas of the refuge subject to the following condition: We require a refuge permit.

* * * * *

29. In § 32.61 South Dakota by revising paragraphs A. and D. of Lacreek National Wildlife Refuge to read as follows:

§ 32.61 South Dakota

* * * * *

Lacreek National Wildlife Refuge

A. Hunting of Migratory Game Birds. We allow waterfowl hunting on designated areas of the refuge in accordance with State law.

* * * * *

D. Sport Fishing. We allow fishing in areas posted as open in accordance with State law.

* * * * *

30. In § 32.62 Tennessee by revising paragraphs B., C., and D.4. of Cross Creeks National Wildlife Refuge to read as follows:

§ 32.62 Tennessee.

* * * * *

Cross Creeks National Wildlife Refuge

* * * * *

B. Upland Game Hunting. We allow hunting of squirrel on designated areas of the refuge subject to the following condition: We require a refuge permit.

C. Big Game Hunting. We allow hunting of white-tailed deer and turkey on designated areas of the refuge subject to the following condition: We require a refuge permit.

D. Sport Fishing. * * *

* * * * *

4. Fish lengths and daily creel limits established for Barley Reservoir by the Tennessee Wildilfe Resources Agency apply to all waters within the boundary of the refuge.

* * * * *

31. In § 32.63 Texas by:

a. Revising paragraphs C. and D. of Aransas National Wildlife Refuge; and

b. Revising paragraph A.5. and adding paragraphs C.9., C.10., and C.11. of Balcones Canyonlands National Wildlife Refuge to read as follows:

§ 32.63 Texas.

* * * * *

Aransas National Wildlife Refuge

* * * * *

C. Big Game Hunting. We allow hunting of white-tailed deer and feral hog on designated areas of the refuge subject to the following conditions:

1. We may immediately close the entire refuge or any portion thereof to hunting in the event of the appearance of whooping cranes in the hunt area.

2. You must obtain a refuge permit and pay a fee.

3. You may not use dogs to trail game.

4. You may not possess alcoholic beverages while on the refuge.

5. We will annually designate bag limits in the refuge hunt brochure.

6. We allow archery hunting in October within the deer season for the county on specified days listed in the refuge hunt brochure.

7. We allow firearm hunting in November within the deer season for the county on specified days listed in the refuge hunt brochure.

8. Firearm hunters must wear a total of 400 square inches (10.16 m^2) hunter orange including 144 square inches (936 cm^2) visible in front and 144 square inches visible in rear. Some hunter orange must appear on head gear.

9. You must unload and encase all firearms while in a vehicle.

10. You may not hunt on or across any part of the refuge road system, or hunt from a vehicle on any refuge road or road right-of-way.

11. You may hunt white-tailed deer and feral hog on designated areas of Matagorda Island in accordance with the State permit system as administered by Texas Parks and Wildlife Department.

D. Sport Fishing. We allow fishing on designated areas of the refuge subject to the following conditions:

1. You may not use crab traps in any refuge marshes, including Matagorda Island.

2. Beginning April 15 through October 15, you may fish on the refuge only in areas designated in the refuge fishing brochure.

3. You may fish all year in marshes on Matagorda Island and in areas designated in the refuge fishing brochure.

Balcones Canyonlands National Wildlife Refuge

A. Hunting of Migratory Game Birds. * * *

* * * * *

5. We allow dogs to retrieve game birds during the hunt, but the dogs must be under control of the handler at all times and not allowed to roam free.

* * * * *

C. Big Game Hunting. * * *

* * * * *

9. You may not use dogs for hunting.

10. You may not camp.

11. You may only use vehicles on designated roads and parking areas.

* * * * *

32. In § 32.67 Washington by:

a. Removing Arid Lands National Wildlife Refuge Complex;

b. Alphabetically adding Hanford Reach National Monument/Saddle Mountain National Wildlife Refuge; and

c. Revising paragraphs A. and C. of Willapa National Wildlife Refuge to read as follows:

§ 32.67 Washington.

* * * * *

Hanford Reach National Monument/Saddle Mountain National Wildlife Refuge

A. Hunting of Migratory Game Birds. We allow hunting of geese, ducks, coots, mourning doves, and common snipe on the Wahluke Unit and designated Columbia River islands (those islands downstream of the Bonneville Powerline crossing, between River Mile 351 and 341) of the Monument/Refuge in accordance with State regulations and subject to the following conditions:

1. You may possess only approved nontoxic shot while on the refuge.

2. We allow access from 2 hours before sunrise to 2 hours after sunset. We do not allow overnight camping and/or parking.

3. We close the furthest downstream island (Columbia River Mile 341–343) to hunting.

B. Upland Game Hunting. We allow hunting of pheasant, quail, and partridge on designated areas on the Wahluke Unit of the Monument/Refuge in accordance with State regulations and subject to the conditions listed below:

1. You may possess only approved nontoxic shot while on the refuge.
2. We allow only shotguns and archery hunting.
3. We allow access from 2 hours before sunrise to 2 hours after sunset. We prohibit overnight camping and/or parking.

C. Big Game Hunting. We allow hunting of deer on the Wahluke Unit of the Monument/Refuge in accordance with State regulations and subject to the following conditions:

1. We allow only shotguns, muzzleloaders, and archery hunting.
2. We allow access from 2 hours before sunrise to 2 hours after sunset. We prohibit overnight camping and/or parking.

D. Sport Fishing. We allow fishing on the Wahluke Unit and designated Columbia River islands of the Monument/Refuge (those islands downstream of the Bonneville Powerline crossing, between River Mile 351 and 341) in accordance with State regulations and subject to the following conditions:

1. We allow access to the islands from July 1 to September 30, except for Islands 18 and 19 (downstream of Johnson Island), where we allow access from July 31 to September 30.
2. We allow access from 2 hours before sunrise to 2 hours after sunset. We prohibit overnight camping and/or parking.
3. We allow nonmotorized boats and boats with electric motors on the WB–10 Ponds, with walk-in access only.

* * * * *

Willapa National Wildlife Refuge

A. Hunting of Migratory Game Birds. We allow hunting of geese, ducks, coots, and snipe on designated areas of Riekkola, Lewis, Tarlatt Slough, and Leadbetter Units in accordance with State hunting regulations and subject to the following conditions:

1. Prior to entering the hunt area at the Riekkola and Tarlatt Slough Units, we require you to obtain a refuge permit, pay a recreation user fee, and obtain a blind assignment.
2. At the Riekkola and Tarlatt Slough Units, you may take ducks and coots only coincidental to hunting geese.
3. We allow hunting on Wednesday and Saturday in the Riekkola and Tarlatt Slough Units only from established blinds.
4. At the Lewis Unit, we prohibit hunting from the outer dike that separates the bay from the freshwater wetlands.
5. At the Riekkola and Tarlatt Slough Units, you may possess no more than 25 approved nontoxic shells per day while in the field.
6. At the Leadbetter Unit, you may possess only approved nontoxic shot.

* * * * *

C. Big Game Hunting. We allow hunting of deer, elk, and bear on Long Island and on designated areas of the Bear River Unit, in accordance with State hunting regulations and subject to the following conditions:

1. At Long Island you must possess a valid refuge permit and report game taken, as specified with the permit.
2. At Long Island we allow only archery hunting and prohibit firearms.
3. At Bear River we do not allow bear hunting.
4. We prohibit dogs.

* * * * *

33. In § 32.69 Wisconsin by:

a. Revising paragraph C.1. of Fox River National Wildlife Refuge;

b. Revising paragraph D. of Horicon National Wildlife Refuge;

c. Revising paragraphs A. and B. of St. Croix Wetland Management District; and

d. Revising Trempealeau National Wildlife Refuge to read as follows:

§ 32.69 Wisconsin.

* * * * *

Fox River National Wildlife Refuge

* * * * *

C. Big Game Hunting. * * *

1. We require refuge permits during designated time periods.

* * * * *

Horicon National Wildlife Refuge

* * * * *

D. Sport Fishing. We allow fishing on designated areas of the refuge subject to the following condition: We allow only bank fishing.

* * * * *

St. Croix Wetland Management District

A. Hunting of Migratory Game Birds. We allow hunting of migratory game birds throughout the district except that you may not hunt on designated portions posted as closed of the St. Croix Prairie Waterfowl Production Area (WPA) in St. Croix County.

B. Upland Game Hunting. We allow hunting of upland game throughout the district except that you may not hunt on designated portions posted as closed of the St. Croix Prairie WPA in St. Croix County.

* * * * *

Trempealeau National Wildlife Refuge

A. Hunting of Migratory Game Birds. We allow hunting of migratory game birds on designated areas of the refuge subject to the following condition: We require a refuge permit.

B. Upland Game Hunting. We allow hunting of upland game on designated areas of the refuge subject to the following condition: We require a refuge permit.

C. Big Game Hunting. We allow hunting of white-tailed deer on designated areas of the refuge subject to the following condition: We require a refuge permit.

D. Sport Fishing. We allow fishing on designated areas of the refuge subject to the following conditions:

1. We allow only hand-powered boats or boats with electric motors on the refuge.
2. You must remove ice fishing shelters from the refuge following each day's hunt.
3. We prohibit possessing archery or spearing equipment on refuge pools at any time. We allow taking rough fish by bow and arrow or spear only along the refuge boundary in the backwaters of the Trempealeau River, in accordance with State regulations.

* * * * *

34. In § 32.72 Guam by revising paragraph D. of Guam National Wildlife Refuge to read as follows:

§ 32.72 Guam.

* * * * *

Guam National Wildlife Refuge

* * * * *

D. Sport Fishing. Anglers may fish and collect marine life on designated areas of the refuge only in accordance with refuge and Government of Guam laws and regulations. The leaflet is available at the refuge headquarters and anglers are subject to the following additional conditions:

1. Anglers may be on the refuge from 8:30 a.m. until 5:00 p.m. daily, except Thanksgiving, Christmas, and New Year's Day.
2. We prohibit overnight camping on the refuge.
3. You may not possess surround or gill nets on the refuge.
4. We prohibit the collection of corals, giant clams (*Tridacna* and *Hippopus* spp.), and coconut crabs (*Birgus latro*) on the refuge.

Dated: May 23, 2001.

Joseph E. Doddridge,

Acting Assistant Secretary for Fish and Wildlife and Parks.

[FR Doc. 01–16500 Filed 7–2–01; 8:45 am]

BILLING CODE 4310–55–U

DEPARTMENT OF COMMERCE

National Oceanic and Atmospheric Administration

50 CFR Part 216

[Docket No. 001031304–0304–01; I.D. 080299B]

RIN 0648–AH26

Protected Species Special Exception Permits

AGENCY: National Marine Fisheries Service (NMFS), National Oceanic and Atmospheric Administration (NOAA), Commerce.

ACTION: Proposed rule and request for comments.

SUMMARY: NMFS is proposing to amend the regulations for permits to capture or import marine mammals for purposes of public display under the Marine Mammal Protection Act of 1972 (MMPA). The proposed revisions would implement amendments to the MMPA enacted April 30, 1994, affecting marine

mammals held captive for public display purposes and clarify the public display requirements relating to permits to capture or import, transport or transfer, and export marine mammals.

DATES: Comments on this proposed rule must be postmarked or received by September 4, 2001.

ADDRESSES: Comments on this proposed rule may be mailed to the National Marine Fisheries Service, Office of Protected Resources, Permits Division (F/PR1), 1315 East-West Highway, Rm. 13705, Silver Spring, MD 20910. Comments may also be submitted by facsimile at (301) 713–0376, provided the facsimile is confirmed by hard copy submitted by mail and postmarked no later than the closing date of the comment period. Please note that comments will not be accepted by e-mail or by other electronic media.

FOR FURTHER INFORMATION CONTACT: Ann Terbush, National Marine Fisheries Service, Office of Protected Resources, Permits Division (301/713–2289).

SUPPLEMENTARY INFORMATION:

General Background

A proposed rule was published on October 14, 1993 (58 FR 53320), to consolidate existing permit regulations promulgated under the MMPA, the Endangered Species Act, and the Fur Seal Act (Acts), governing the take, import, or export of protected species under the jurisdiction of NMFS for purposes of scientific research, enhancement, and public display. That proposed rule also clarified procedures for the disposition of rehabilitated stranded marine mammals.

On April 30, 1994, amendments to the MMPA, Pub. L. 103–238, 16 U.S.C. 1361 *et seq.* (1994 amendments) added a prohibition on marine mammal exports and significantly changed the scope and extent of permitting authority for public display purposes. These amendments eliminated the basis for many of the public display provisions in the 1993 proposed rule. NMFS determined that permitting and other requirements specific to capturing, importing, exporting, or transporting marine mammals for public display under the 1994 MMPA amendments could only be addressed in a new proposed rule.

A final rule was issued on May 10, 1996, (61 FR 21926) implementing some of the changes proposed in 1993. That final rule, which became effective on June 10, 1996, established basic permit requirements under the Acts to take, import, and export marine mammals and marine mammal parts for purposes of scientific research, enhancement, photography, and, where captures and initial imports are involved, for public display. That final rule also provided additional permit criteria specific to scientific research and to enhancement, and established clarified administrative procedures for determining the releasability or the non-releasability and subsequent disposition of rehabilitated stranded marine mammals.

This Proposed Rule

In addition to implementing the revised public display requirements of the MMPA, this proposed rule would amend the regulations governing the taking and importing of marine animals to (1) incorporate the MMPA marine mammal export prohibition, (2) provide an opportunity for public comment on the acquisition of an unreleasable beached or stranded animal by a facility that has not previously held marine mammals for public display, (3) clarify that a permit is needed to retain a releasable beached or stranded marine mammal, and (4) establish a means for identifying parts taken from public display animals and authorize the importation of parts for medical examination.

This proposed rule specifies particular requirements for the issuance of permits, the transfer or transport of marine mammals, the exportation of marine mammals, and the reporting of information to NMFS by marine mammal holders. The proposed rule also provides general requirements applicable to holders of marine mammals under the MMPA.

1. Scope

The MMPA and implementing regulations do not apply to marine mammals and marine mammal parts taken or born in captivity before December 21, 1972. The prior status of a marine mammal may be established by submitting an affidavit to the Director, Office of Protected Resources (Office Director) in accordance with § 216.14.

2. General Requirements

Animals held under a special exception permit may not be sold, purchased, exported, transferred, or transported for any purpose other than public display, scientific research, or enhancement.

The Office Director may also authorize the retention or transfer of custody of non-releasable rehabilitated marine mammals for public display purposes in accordance with § 216.27 (c).

A marine mammal held for public display may not be released into the wild unless such release is specifically authorized under the terms of a scientific research or enhancement permit.

3. Disposition for a Special Exception Purpose

The proposed rule provides that in cases where the proposed recipient of a rehabilitated non-releasable marine mammal is a new facility or does not currently hold U.S. marine mammals for public display purposes, NMFS will publish a notice in the **Federal Register** to open a special 30–day public comment period as part of the review of the facility to determine that MMPA requirements will be met. This comment period will provide an opportunity for NMFS to gather information from the public and consider whether to authorize the permanent placement of the rehabilitated marine mammal at that facility. In instances where a rehabilitated beached and stranded marine mammal has been determined releasable, it may be held for public display, scientific research, or enhancement in lieu of a direct capture from the wild. A permit would be required for the permanent retention of the animal for public display, scientific research, or enhancement.

Captive marine mammals may not be released into the wild. From a scientific perspective, the release of captive marine mammals is considered experimental. Scientists question the effect of time in captivity on marine mammals' ability to survive in the wild. Captivity can affect marine mammals' ability to forage in the wild, avoid predators, integrate with wild stocks, and avoid interactions with humans and vessels. Additionally, release poses risks to wild stocks, including the risk that released animals will introduce contagious diseases, disrupt essential social structures, pass on behaviors acquired in captivity that can be harmful in the wild, and alter the genetic composition of wild populations. These concerns are compounded by the fact that no established scientific protocols exist to guide researchers in the proper selection, training, release and follow-up of candidate marine mammals. Many of these concerns are highlighted in a detailed study of release conducted in 1993 by the Department of the Navy in an effort to consider management options for marine mammals it maintained.

The Conference Report on the Department of Defense Appropriations Act of 1995 specifically addressed the need to obtain a scientific research permit for the release of captive marine mammals:

Given the potential for 'takes' under the Marine Mammal Protection Act or the Endangered Species Act, the conferees direct that in no case shall any release be attempted unless authorized by a scientific research permit issued by the Secretary of Commerce under the appropriate statutory authority.

H.R. Conf. Rep. No. 747, 103rd Cong., 2nd Sess. 9643 (1994).

On a related issue, there has been interest in conducting ''pinger-recall'' training of captive dolphins outside of pens or enclosures in the open ocean. While NMFS believes that this is primarily under the purview of APHIS, NMFS remains concerned about the potential effect on wild populations of marine mammals and their possible interactions with captive dolphins. These risks have been noted earlier in this section. Another consideration associated with any inadvertent release is the potential disruption of long-term studies of resident populations of marine mammals in certain locations. Based on the risks to captive marine mammals as well as resident wild populations of dolphins or other marine mammals in the area, the proposed regulations provide that any release of captive marine mammals for purposes of recall training requires advance authorization by the Office Director. This authorization would provide conditions similar to those that would be included in scientific research or enhancement permits that authorize release of marine mammals to the wild.

Under the proposed regulations, the only purpose for which an authorization would be granted is to train the animals for pinger-recall or similar behavioral conditioning to retrieve the animals should an inadvertent release occur or a release is required for the health and welfare of the animals in the event of a natural disaster or facility failure. Since this training would not be part of an interactive program or show, the general public (including paying customers to that facility) would not participate in this training. In addition, facility operators and trainers engaging in this activity would be expected to provide a contingency plan for approval by NMFS to locate and retrieve their animals should an inadvertent release occur. Finally, NMFS must consider the status of any wild marine mammal stocks in the area and the potential effects of inadvertent release of the captive marine mammals on these wild stocks in evaluating such requests.

4. General Public Display Requirements

Some activities involving animals held for public display can only occur as authorized under scientific research permits. The conduct of intrusive research (see definition, § 216.3) on any marine mammal held for public display is prohibited except under the conditions of a research permit.

5. Falsification of Reports

The proposed regulations would make it unlawful for any person subject to the jurisdiction of the United States to fail to disclose materially relevant information or to falsify information in connection with marine mammal inventory, permit-related reports, or transport notifications required under this subpart D of 50 CFR part 216.. Any person who violates these provisions would be subject to the imposition of penalties in accordance with the procedures set forth in 15 CFR part 904.

6. Marine Mammal Parts

As originally mandated in 1972, the restriction against the import and export of marine mammal parts was designed to prevent the development of commercial markets for marine mammal parts or products derived therefrom. However, the circumstances of bona fide scientific research involving import and export of marine mammal parts are varied, making clarity in regulations difficult. In addition, previously only the export of ESA listed species and parts was prohibited. The 1994 Amendments extended this prohibition to all marine mammals and marine mammal parts, except for the export of living marine mammals for purposes of public display.

In response, NMFS has made every effort to implement the intent of the law without unduly burdening scientific research activities by ensuring that adequate documentation is provided for a part's acquisition, location and possession.

The proposed regulations would revise §–216.37 to allow for the import, without a specific permit, of specimens for diagnostic or necropsy purposes from marine mammals that have been legally exported from the United States and are held in foreign jurisdictions. In lieu of a permit, the Office Director will issue a letter of authorization to the requestor that must accompany the shipment.

7. Permits to Capture or Import

Prior to the 1994 amendments, under section 104 (c)(1) of the MMPA, NMFS was charged with specifying in its permits the methods of care and transportation that must be used both during and after the capture or importation of marine mammals. Under this provision, NMFS was responsible for including captive care requirements in permits issued to both the initial holders of captured or imported animals and to the recipients of those animals when they were transferred from one facility to another. The facilities receiving marine mammals were thus generally required to have permits before they could assume custody of the animals.

The 1994 amendments removed the authority of NMFS to specify methods of care and transportation of marine mammals held for public display purposes. Public display permits are now required only for the capture or importation of marine mammals, and not for the possession of marine mammals in captivity. Captive care and maintenance of marine mammals held for public display are now under the sole jurisdiction of the Department of Agriculture's Animal and Plant Health Inspection Service (APHIS), which administers the Animal Welfare Act (AWA).

By removing the jurisdiction of NMFS over public display captive animal care, the amendments eliminated the basis for NMFS requirement that all public display facilities be issued permits before acquiring marine mammals. The MMPA now specifically states that a permit issued by NMFS to take or import a marine mammal for the purpose of public display grants the holder the right to transfer the marine mammal from one public display facility to another without obtaining any additional permit or authorization. However, this right to transfer may only be invoked under certain specified circumstances, including the requirement that the recipient complies with the three basic public display criteria requirements of section 104 (c)(2)(A) of the MMPA.

a. *Applicants.* An applicant for a public display permit is the person (or entity) that will assume custody of the marine mammal to be captured or imported under the permit. All applicants for public display permits must comply with permit-application submission requirements. These requirements are stated in § 216.33.

b. *Applications and Issuance Criteria.* Under the MMPA as amended, permits to take or import a marine mammal for public display may be issued only to an applicant who (1) is registered or licensed under the AWA, (2) maintains facilities for the public display of marine mammals that are open to the public on a regularly scheduled basis and provides access to such facilities that is not limited or restricted other than by charging of an admission fee, and (3) offers a program for education or conservation that is based on professionally recognized standards of the public display community.

NMFS is proposing that the introductory phrase of the second criterion, ''maintains facilities for the public display of marine mammals . . .,'' means facilities that comply with all applicable APHIS standards (9 CFR 3.104 through 3.118). In this regard, such facilities include traveling displays/exhibits where the primary enclosure used as the animal's permanent housing structure is used to transport the marine mammal and also complies with all applicable APHIS standards (9 CFR 3.104). In addition, if any marine mammal is to be held at a facility other than one maintained by the applicant, the applicant must include a letter from that facility agreeing to hold those marine mammals, and certifying that the facility is registered or licensed under the AWA and meets APHIS standards for holding marine mammals.

Documentation of compliance with the requirement that public display facilities be ''open to the public on a regularly scheduled basis and that access to such facilities is not limited or restricted other than by charging of an admission fee'' may include a brochure, flyer, or other publicly distributed document that states the dates, times, and, where applicable, admission fee, for the public display facility involved.

Prior to the 1994 amendments, section 104 (c)(2) of the MMPA required that NMFS determine whether the program for education or conservation offered by the applicant was acceptable based on professionally recognized standards of the public display community. In 1989, NMFS determined that the statutory phrase ''professionally recognized standards of the public display community'' did not refer to any standards that had been established; i.e., such standards did not exist. Therefore, on May 22, 1989, NMFS published in the **Federal Register** (54 FR 22001) a notice of interim policy stating that, in order to be determined acceptable by NMFS, ''an applicant's education or conservation program must include a program of formal or informal learning that conveys accurate information about the marine mammals being displayed and communicates in an effective manner a message and purpose that are consistent with the policies of the MMPA.''

There are no uniform professionally recognized standards established by the entire public display community for education or conservation programs. The Alliance of Marine Mammal Parks and Aquariums and the American Zoo and Aquarium Association, together, represent approximately 60 percent of the facilities that hold marine mammals for public display. Following enactment of the 1994 MMPA amendments, NMFS asked both of these organizations to prepare a list of standards. These two organizations prepared and submitted their separate respective standards, which were then published by NMFS for reference purposes (59 FR 50900, October 6, 1994) as examples of standards on which education or conservation programs are based. Other professionally recognized standards may also be used.

These proposed regulations, therefore, specify that any receiver of captive marine mammals (i.e., any person, including any permit applicant or display facility, to which captive animals are to be transported, sold, imported, exported, or otherwise transferred) must submit a description of their education or conservation program to NMFS.

Applicants for permits to capture or import marine mammals for public display purposes must provide NMFS with documentation confirming that they: (1) are registered or hold a license issued under 7 U.S.C. 2131 *et seq.*; (2) maintain facilities for the public display of captive marine mammals that is open to the public on a regularly scheduled basis with access not limited or restricted other than by charging of an admission fee; and (3) offer a program for education or conservation purposes based on professionally recognized standards of the public display community.

In addition, applicants must also demonstrate that the proposed capture or importation is from a source that will have the least possible effect on wild populations and that any capture is consistent with quotas established by NMFS on captures and, where no quota is in effect, that it will not have a significant adverse impact on the species or stock of the animals to be captured. The capture of marine mammals to be imported must also be consistent with requirements for capturing animals in waters under U.S. jurisdiction.

c. *Restrictions*. The final rule that became effective June 10, 1996, contained general restrictions, conditions, and reporting requirements applicable as appropriate to any special exception permit, including public display permits. This proposed rule includes additional restrictions specific to public display permits and holders of captive marine mammals.

8. Re-export of Marine Mammals

When a marine mammal is imported into the United States under an import permit, the permit will authorize re-export of that animal to the original foreign holder provided NMFS is given 15 days advance notice of the re-export. This will facilitate the re-export of animals that are in the United States on temporary public display or breeding loans.

9. Transport or Transfer of Captive Animals and Notifications

Holders of captive marine mammals for public display have the right to transport, export, sell, purchase, transfer an interest in or otherwise transfer marine mammals for public display purposes without authorization from NMFS, provided that the recipient is in compliance with the MMPA and certain other requirements, including advance notifications, are met. All holders of marine mammals are required to provide identification data for each animal they hold, its location, and information about any animal transport or transfer. This requirement applies to holders of animals exported from the United States as well as transfers and transports within the United States. The proposed rule states that NMFS must be notified at least 15 days, but not more than 90 days, in advance of the transport, export, sale, purchase, transfer of an interest in or other transfer of any animal held for public display under the MMPA. Holders must submit a new transport notification if the marine mammals are not transferred within 60 days after the planned transfer date, if the species to be transported changed or increased, or if the number of animals to be transported is increased.

This 15–day advance notification requirement would apply to the transport of marine mammals among facilities maintained by the same permittee or holder as well as among those facilities maintained by different persons. Marine mammal holders that transport animals from one site to another as traveling exhibits must also comply with the 15-day advance notification requirement, although a transport schedule may be provided in these cases.

There are two proposed exceptions to this 15–day advance notification requirement. In the first, NMFS may authorize a marine mammal transfer before the full 15–day notification period has elapsed on the basis of a request that details circumstances which justify the inability to provide 15 days advance notice of the transfer (e.g., time critical business opportunity). In the second, a documented medical emergency that justifies the transport is provided to the Office Director within 24 hours. These limited exceptions to

the 15-day advance notification requirement are not applicable to exports.

Where animals are transported among display facilities, notification must include a certification from the recipient facility that it meets the requirements for a public display permit. Since the 1994 MMPA amendments, NMFS has asked both the shipper and the receiver of marine mammals to certify that the receiver is in compliance with the MMPA. In this manner the receiver documents his or her compliance with the basic criteria for holding marine mammals for public display purposes, and the shipper/holder is assured, to the extent practicable, that the intended recipient meets the criteria necessary for the shipper to invoke the right to transport or otherwise transfer marine mammals without obtaining any additional permit or authorization.

To ensure that all certification and notification requirements under the MMPA are met, holders must use NMFS' Marine Mammal Transport Notification (MMTN). The receiver must verify receipt of transferred marine mammals within 30 days.

10. Reporting

All holders of marine mammals under the MMPA must comply with certain marine mammal inventory reporting requirements. Holders are required to notify NMFS within 30 days of the birth or death of animals. Stillbirths must be reported so that they can be distinguished for inventory purposes from successful births and from other mortalities. If the cause of death will not be known within 30 days, holders may note in the death notification that the cause of death is undetermined, and must then notify NMFS of the cause of death upon completion of necropsy analysis.

NMFS will also periodically request holders to verify data in its Marine Mammal Inventory database. To facilitate the entry and ensure consistency in the information reported by marine mammal holders into the database, such information must be submitted in accordance with any reporting formats that NMFS may establish. Holders must use NMFS' Marine Mammal Data Sheet (MMDS) to report changes in their inventories (i.e., births and deaths).

11. Submission of Notifications and Reports

To ensure compliance with the statutory requirements and to reduce and streamline reporting and notification requirements, NMFS has entered into a Cooperative Agreement, under the authority of section 112 (c) of the MMPA (16 U.S.C. 1382), with the International Species Information System (ISIS) to administer the captive marine mammal inventory database, including marine mammal transport notifications. ISIS is an international non-profit membership organization that manages a database and information system for wild animal species in captivity, including marine mammals, at more than 500 institutions in 54 countries. Under this cooperative agreement, ISIS will administer the captive marine mammal inventory information in consultation with NMFS as part of the central ISIS captive wildlife database and information system.

Many of the marine mammal holders who currently report marine mammal inventory information and transport/transfer notifications to NMFS also voluntarily contribute their inventory information to the ISIS. It is estimated that one-half of the marine mammal specimens are reported separately to both databases; therefore, converting to ISIS administration of the marine mammal database should ease the reporting burden for many marine mammal holders.

The major objectives of this Cooperative Agreement are to: (1) improve the long-term efficiency and quality of the captive Marine Mammal Inventory and Transport/Transfer database, (2) increase convenience and efficiency, and reduce cost and burden for reporting required under the MMPA by all holders of marine mammals, (3) eliminate duplicative reporting by many of the marine mammal holders, (4) enhance public access to the captive marine mammal information required under the MMPA, (5) eliminate duplication of data-collection efforts, and (6) avoid current duplication of development and maintenance of custom inventory database software by the ISIS and NMFS.

Under the proposed rule all marine mammal holders would be required to submit their 15–day transport notifications and birth/death reports directly to ISIS for processing and entering into the Marine Mammal Inventory database. Since exceptional transfer-related activities may require NMFS authorization, proposed Table 1 of this document outlines the types of inventory/transfer submissions and the locations for submission.

12. Export of Captive Marine Mammals

Prior to the 1994 MMPA amendments, NMFS' policy dictated that the export of captive marine mammals for public display purposes could occur only if NMFS issued a public display permit to the recipient. Under this policy, NMFS made the issuance of permits to export marine mammals for public display contingent on (1) certification of the accuracy of information from foreign permit applicants by the government with jurisdiction over the applicants' facilities; and (2) certification by that government that it would afford comity to any decision by NMFS to amend, modify, suspend or revoke a permit.

''Comity'' is generally understood to be a rule of courtesy by which one government honors decisions made by another government. It is in situations where the United States lacks jurisdiction over persons or things located abroad that the U.S. Government may need to seek assurances of comity from foreign governments. Executive Branch agencies have inherent authority to ask foreign governments to honor decisions of the U.S. Government on the basis of comity. It has been the policy of NMFS since 1975 to require a comity statement for the export of marine mammals.

When Congress amended the MMPA in 1994, it prohibited the export of marine mammals. However, it also provided that, if certain conditions are met and maintained, persons holding marine mammals for public display purposes could export marine mammals without obtaining additional permits or authorizations from NMFS.

NMFS determined that, based on sections 104 (c)(2)(C), 104 (c)(2)(D), and 104 (c)(9), of the MMPA, Congress intended that any person receiving marine mammals via export meet standards comparable to the public display requirements of the MMPA. Since NMFS has no jurisdiction over the animals once they are exported, but is at the same time required to maintain an inventory of captive marine mammals and ensure comparability, NMFS concluded that the requirement of a comity statement is a reasonable means of ensuring that comparable public display requirements will be met. In that context NMFS intends that through comity agreements, using their own laws, the foreign governments will ensure that: (1) care and maintenance standards comparable to the APHIS standards that apply in the U.S. are met; (2) marine mammals continue to be held for purposes consistent with section 104 of the MMPA; and (3) marine mammal inventory information for exported animals is provided to NMFS.

The export of marine mammals has proven to be one of the more controversial provisions of the MMPA. Since 1994, NMFS has heard from various parties with divergent views.

Some have argued that, because NMFS has no jurisdiction in foreign countries and the ability to ensure comparable standards are met is subject to changing political situations of foreign governments, exports must be banned altogether. Others argue that public display facilities should be free to exercise their rights to export with 15 days notice. They contend that NMFS has no authority to determine comparability, or to require comity letters, and that the requirement to meet comparable standards ends at the time of the export. Others argue that more stringent requirements are needed, such as the posting of a surety bond prior to export, requiring that annual on-site inspections be performed at the expense of the foreign facility receiving marine mammals from the United States, or seeking a statutory amendment clarifying Congressional intent. NMFS believes that requiring a comity letter is the most practical and reasonable solution. However, NMFS is specifically requesting comments on this issue.

13. Seizure of Marine Mammals

This section clarifies that the loss of an APHIS Exhibitor's License is grounds for NMFS to revoke permits or seize marine mammals held for public display. Receipt from APHIS of a letter of intention to revoke such a license may indicate that a person or facility holding marine mammals is not reasonably likely to meet the requirements to hold them in the future and, therefore, those animals may be seized. At NMFS' discretion, the animals may be maintained in the same physical location with the assistance of any person under the direct control of, employed by or under contract to NMFS, or the animals may be physically moved to a new location. NMFS may recover expenses incurred for the seizure from the holder in accordance with section 104 (c)(2)(D) of the MMPA.

Classification

NMFS prepared a Draft EA for this action and will finalize it before the final rule is published. Copies of the Draft EA are available on request (see **ADDRESSES**). NEPA requirements as they pertain to individual permits that may be issued under these proposed regulations will be addressed on a case-by-case basis.

This proposed rule has been determined to be not significant for the purposes of Executive Order 12866.

The Chief Counsel for Regulation, Department of Commerce, certified to the Chief Counsel for Advocacy, Small Business Administration, that this proposed rule, if adopted as proposed, would not have a significant economic impact on a substantial number of small entities as follows:

The proposed rule would not alter the structure of any business or require any modification to these businesses. The types of businesses that this proposed rule would affect are marine mammal parks and aquariums, oceanariums and zoos. The number of these businesses that would qualify as small businesses under the Small Business Administration's criteria is unknown. However, the only costs to these entities would be the administrative costs associated with applying for permits or major permit amendments and for various reports required for tracking the status of marine mammals held for display purposes. Permit fees would not be required, and the anticipated administrative costs should be minimal.

Accordingly, an Initial Regulatory Flexibility Analysis was not prepared.

A Regulatory Impact Review (RIR) was prepared by NMFS and is available upon request (see **ADDRESSES**).

The RIR describes the reasons why the action is being considered and contains a succinct summary of the objectives of, and the legal basis for, the proposed rule. These are described earlier in this preamble.

The RIR contains a description of the entities to which the proposed rule will apply. The Small Business Administration Standard Industrial Code for businesses of this type is 8422 – Arboreta and Botanical or Zoological Gardens. The entities within this group that would be affected are primarily existing public display and scientific research entities that hold marine mammals for public display purposes or conduct scientific research on captive marine mammals. The proposed rules may also affect entities that, although subject previously to MMPA requirements, were uncertain regarding such effects due to the less than specific nature of the previous regulations. The more explicit provisions of the proposed regulations are likely to affect entities whose circumstances or characteristics were not addressed directly or otherwise provided for in previous regulations, i.e., traveling exhibitors. The proposed rule establishes uniform criteria and requirements for all public display permit applicants and permit holders and others holding marine mammals for public display purposes, as well as consistent procedural, reporting and notification requirements.

The projected economic impact of the proposed revisions on affected small business entities consists primarily of a reduction in paperwork burden costs and is, therefore, expected to be beneficial. No other costs have been identified.

Paperwork Reduction Act

Notwithstanding any other provision of the law, no person is required to respond to, nor shall any person be subject to a penalty for failure to comply with, a collection of information subject to the requirements of the PRA, unless that collection of information displays a currently valid OMB control number.

This proposed rule contains collection-of-information requirements subject to the Paperwork Reduction Act (PRA) and which have been approved by OMB under control number 0648–0084. Public reporting burden for these collections of information is estimated to average 20 hours per response for public display permit applications, 29 hours per response for major amendments, 1 hour for transport/transfer notifications, and 30 minutes for each marine mammal inventory report.

This proposed rule also contains collection-of-information requirements subject to review and approval by OMB under the Paperwork Reduction Act (PRA). These requirements and their estimated response times have been submitted to OMB for approval. Public reporting burden for these collections of information is estimated to average 2 hours for a permit capture report, 30 minutes for a permit import report, 30 minutes for a permit capture notification, 30 minutes for a waiver request of the 15–day advance notice of transport, 30 minutes for an initial escape report, 1 hour for an escape report filed a week after the event, 2 hours for an escape report filed six months after the event, and 1 hour for an export certification.

The response estimates above include the time for reviewing instructions, searching existing data sources, gathering and maintaining the data needed , and completing and reviewing the collection of information.

Public comment is sought regarding: whether this proposed collection of information is necessary for the proper performance of the functions of the agency, including whether the information shall have practical utility; the accuracy of the burden estimate; ways to enhance the quality, utility, and clarity of the information to be collected; and ways to minimize the burden of the collection of information, including through the use of automated collection techniques or other forms of information technology. Send comments on these or any other aspects of the collection of information to the Permits Division, Office of Protected Resources listed under the **ADDRESSES** heading of this document, and to OMB at the Office

of Information and Regulatory Affairs, Office of Management and Budget, Washington, DC. 20503 (Attention: NOAA Desk Officer).

The proposed rule does not contain policies with federalism implications sufficient to warrant preparation of a federalism assessment under Executive Order12612.

NOAA has determined that these proposed regulations do not directly affect the coastal zone of any state with an approved coastal zone management program.

List of Subjects in 50 CFR Part 216

Administrative practice and procedure, Imports, Indians, Marine mammals, Penalties, Reporting and recordkeeping requirements, Transportation.

Dated: June 21, 2001.

William T. Hogarth,

Acting Assistant Administrator for Fisheries, National Marine Fisheries Service.

For reasons set forth in the preamble, 50 CFR part 216 is proposed to be amended as follows:

PART 216—REGULATIONS GOVERNING THE TAKING AND IMPORTING OF MARINE ANIMALS

1. The authority citation for part 216 continues to read as follows:

Authority: 16 U.S.C. 1361 *et seq.*

2. In § 216.13, paragraphs (c) and (d) are redesignated as paragraphs (e) and (f), respectively, and new paragraphs (c), (d), and (g) are added to read as follows:

§ 216.13 Prohibited uses, possessions, transportation, sales and permits.

* * * * *

(c) Any person subject to the jurisdiction of the United States to purchase, possess, export, import, transport, or transfer a captive marine mammal, except as authorized under the Act or this part 216 and pursuant to a special exception permit, where required (i.e., for the purpose of public display, scientific research, or enhancing the survival or recovery of the species).

(d) Any person subject to the jurisdiction of the United States to release into the wild a captive marine mammal, except where the release into the wild of such a marine mammal is authorized specifically under a special exception permit, or pursuant to § 216.27 for beached and stranded marine mammals.

* * * * *

(g) Any person to submit false information to any person authorized by the Secretary to implement or enforce the regulations of this part 216.

3. In § 216.27, paragraphs (c)(3) through (c)(6) are redesignated as (c)(5) through (c)(8), respectively, paragraph (c)(2) is redesignated as paragraph (c)(3), and new paragraphs (c)(2) and (c)(4) are added to read as follows:

§ 216.27 Release, non-releasability, and disposition under special exception permits for rehabilitated marine mammals.

* * * * *

(c) * * *

(2) A special exception permit is required to retain a beached or stranded marine mammal that has been determined to be releasable to the wild following rehabilitation (see §§ 216.33 through 216.38 and § 216.43) for scientific research, enhancement or public display. Retention of any such marine mammal pending issuance of a special exception permit is prohibited unless authorized by the Office Director and must comply with paragraph (b)(5) and (c) of this section.

* * * * *

(4) Upon receipt of a request to retain or transfer a non-releasable marine mammal for public display at a facility that has not previously held marine mammals for public display, the Office Director shall publish a notice of receipt of the request in the **Federal Register** and invite comments from interested parties. The notice will establish a 30–day comment period which must elapse before action can be taken on the request.

* * * * *

4. In § 216.32, paragraph (a) is revised to read as follows:

§ 216.32 Scope.

* * * * *

(a) All marine mammals and marine mammal parts taken, including marine mammals born in captivity after December 20, 1972. The prior status of a marine mammal may be established in accordance with 50 CFR 216.14; and

* * * * *

5. In § 216.37, the introductory text and (d)(2) are revised, and a new paragraph (e) is added to read as follows:

§ 216.37 Marine mammal parts.

With respect to marine mammal parts acquired by take or import authorized under a permit issued under this subpart or obtained from or following the death of a captive marine mammal held for public display:

* * * * *

(d) * * *

(2) A unique number assigned by the permit holder or for parts obtained from or following the death of a captive marine mammal held for public display, the NMFS Marine Mammal Inventory Identification Number assigned to the subject captive marine mammal is marked on or affixed to the marine mammal specimen or container;

* * * * *

(e) The Office Director may authorize the importation, without a permit, of any marine mammal part derived from a marine mammal exported from the United States if the purpose of the importation is for medical examination and diagnosis concerning that marine mammal's health if it is alive or the cause of death if it has died. Further disposition of any such part must be in accordance with paragraphs (a) through (d) of this section.

6. Section 216.43 is added to read as follows:

§ 216.43 Public display.

(a) *General Public Display Requirements.* (1) For the purposes of the section, the terms ''Custody,'' ''Holder,'' ''Receiver,'' ''Transfer,'' and ''Transports'' are defined as follows:

(i) *Custody* means the responsibility for and the authority to determine the disposition of the captive marine mammal, including transfer and transport.

(ii) *Holder* means any person who has custody of a captive marine mammal. A holder may also be a public display permit holder.

(iii) *Receiver* means a person who receives custody of a transferred marine mammal. Where an interest in a marine mammal is being purchased or otherwise transferred, the receiver is the purchaser or transferee. After a marine mammal is transferred, the receiver becomes a holder.

(iv) *Transfer* means to convey any custodial interest in a marine mammal by any means including, but not limited to donation, purchase, or sale. A conveyance of interest in a marine mammal means the transfer of a whole interest. A transfer of a marine mammal may occur without a transport from one facility to another.

(v) *Transport* means the physical movement of marine mammals between facilities or between distinct geographic locations.

(2) Holders of marine mammals for public display purposes must comply with the three public display requirements at paragraphs (b)(3)(i) through (iii) of this section.

(3) No person, holder, or facility may conduct intrusive research on any captive marine mammal held for public display purposes unless the Office Director authorizes such research under

a separate scientific research or enhancement permit.

(4) Right of inspection. To facilitate compliance with the requirements of § 216.43:

(i) The holder shall allow any designated employee of NOAA, or any person designated by the Office Director to:

(A) Examine any marine mammal held for public display;

(B) Inspect all facilities and operations which support any marine mammal held for public display; and

(C) Review and copy all records concerning any marine mammal held for public display.

(ii) The holder shall cooperate with any examination, inspection, or review conducted pursuant to paragraph (b)(6) of this section, and shall provide any other relevant information requested.

(5) Temporary release authorizations for purposes of open-water training of captive marine mammals may be granted by the Office Director.

(b) *Permits to capture or import marine mammals*. No person may capture a marine mammal from the wild or import a marine mammal for public display purposes, except pursuant to a special exception permit for public display. In addition to the provisions at § 216.33 through § 216.38, permits for public display are governed by the following requirements:

(1) *Applicant*. The applicant must be the person with or seeking custody of the marine mammal. If the applicant is a corporation or partnership, the application must indicate the date of incorporation or when the partnership was formed, and the State in which the corporation or partnership was formed. In the case of imports, if authority over the custody of the marine mammal remains with a foreign entity, the applicant must be the U.S. entity that will assume temporary custody of the marine mammal while in the United States.

(2) *Application submission*. (i) An Applicant must submit a complete permit application at least 90 days before the desired effective date of the permit. Application instructions can be obtained from the Permits Division, Office of Protected Resources.

(ii) Upon receipt of an incomplete or inaccurate application, the Office Director will notify the applicant of the deficiency. If the applicant fails to correct any deficiencies within 60 calendar days, the application will be deemed withdrawn.

(3) *Issuance criteria*. For the Office Director to issue a public display permit, the applicant must:

(i) Offer a program for education or conservation purposes based on professionally recognized standards of the public display community;

(ii) Be registered or hold an exhibitor's license issued under the Animal Welfare Act (AWA), 7 U.S.C. 2131 *et seq.*, and comply with all applicable Animal and Plant Health Inspection Service (APHIS) standards at 9 CFR subpart E;

(iii) Maintain a facility for the public display of captive marine mammals that is open to the public on a regularly scheduled basis, with access not limited or restricted other than by charging of an admission fee. For purposes of this paragraph (b)(3)(iii):

(A) A facility includes a traveling display/exhibit where the primary enclosure used to transport a marine mammal is also used as the permanent housing enclosure;

(B) ''Maintaining'' a facility includes leasing, owning, or otherwise controlling the facility where the marine mammal will be kept; and

(C) If an applicant's facility is under construction at the time application is made and may not be licensed by APHIS before the Office Director's decision to issue or deny a permit, the applicant must, as part of the application, identify an alternative licensed facility and include a letter from the facility agreeing to hold the subject marine mammals;

(iv) Demonstrate that the proposed capture or importation of living marine mammals is one that will present the least practicable effect on wild populations;

(v) Demonstrate that any proposed permanent removal from the wild:

(A) Is consistent with any applicable quota established by NMFS, or

(B) Where there is no quota in effect, will not have, by itself or in combination with all other known takes and sources of mortality, a significant direct or indirect adverse effect on the protected species or stock, as determined on the basis of the best available information on cumulative take for the species or stock, including information gathered by the applicant concerning the status of the species or stock; and

(vi) Demonstrate that the capture of any marine mammal proposed for importation was, or will be, consistent with the MMPA, as outlined in § 216.34.

(4) *Permit restrictions*. In addition to the general permit restrictions outlined in § 216.35, the following restrictions apply to all public display permits issued under subpart D:

(i) Permit holders must comply with the requirements of paragraphs (b)(3)(i) through (iii) of this section.

(ii) Permit holders may not capture or import a marine mammal that is:

(A) From a species or stock designated as depleted under the MMPA or proposed by NMFS to be designated as depleted unless, for imports, the marine mammal to be imported is captive born and the provisions of paragraph (b)(6)(iv)(A) of § 216.41 are met; or

(B) At the time of capture or import, pregnant, lactating, or either unweaned or less than 8 months old unless the Office Director determines that such capture or importation is necessary for the protection or welfare of the animal.

(iii) Permit holders may not transfer or transport captive marine mammals unless:

(A) The receiver meets the public display criteria outlined in paragraphs (b)(3)(i)through(iii) of this section; and

(B) The permit holder has met all marine mammal transfer/transport notification requirements of § 216.43(e).

(iv) The authorization to capture a marine mammal from the wild or to import a marine mammal shall be valid for a period of time as set forth in the permit. If the capture or import does not occur during the period initially authorized, the Office Director may extend the authorized period upon request of the permit holder.

(5) *Permit conditions*. All public display permits issued under this subpart shall, in addition to the specific conditions set forth in § 216.36(a), contain other conditions deemed appropriate by the Office Director, including but not limited to the following:

(i) For a capture from the wild, the permit holder must provide the Office Director with 15 days notice in advance of the actual date(s) and location of the capture authorized by the permit to allow for the presence of an NMFS observer, if requested by the Office Director.

(ii) The importation of marine mammals is subject to the provisions of 50 CFR part 14. No marine mammal may be imported without the permits required under the Convention on International Trade in Endangered Species of Wild Fauna and Flora (CITES). Information regarding CITES permits may be obtained from the U.S. Fish and Wildlife Service.

(iii) The permit holder must provide the Office Director with at least 15 days notice in advance of the actual date, time, and port of entry for imports.

(iv) In the case of imports, marine mammals must be transported from the foreign facility to the United States in

accordance with the U.S. Department of Agriculture's Transportation Standards outlined in 9 CFR subpart E. Ports of entry for imports of marine mammals or marine mammal parts are listed in § 216.50 (a) through (d).

(v) For any subsequent transfer and/or transport, or export of the subject marine mammal, the permit holder and receiver must comply with the notification and certification requirements of § 216.43 (d) or § 216.43 (f), as appropriate.

(vi) Progeny of marine mammals imported into the United States are subject to MMPA reporting and transfer notification requirements. The permit holder and any subsequent holder of captive marine mammals must report births, deaths, and any transfer according to the notification and reporting provisions of § 216.43 (e).

(vii) The permit holder may hold a marine mammal captured from the wild in a temporary facility, including a facility not licensed by APHIS, for the purpose of acclimation for a period not greater than 6 months provided:

(A) The holding facility's sole purpose is the acclimation of marine mammals captured from the wild, and

(B) The temporary holding facility meets all applicable AWA standards.

(viii) The terms and conditions of a public display permit are effective as long as the permit holder maintains custody of the marine mammal authorized to be captured from the wild or imported.

(6) *Permit reports*. In addition to the notification and reporting requirements under § 216.38 and § 216.43 (e), all permit holders are subject to the following reporting requirements:

(i) *Collection reports*. Permit holders must submit a collection report within 30 days of the capture of a marine mammal authorized under a public display permit. The collection report must describe:

(A) The name of the individual who captured the marine mammal(s) and other personnel involved in the capture activities;

(B) The method of taking for each marine mammal, including the gear used;

(C) The specific date, time and location of the taking, including latitude and longitude and geographical location;

(D) Any problems, injuries or complications that may have occurred during the collection,

(E) The taking of any other marine mammals, including by harassment, that occurred during the collection;

(F) Any lethal takes which occurred in connection with the capture, including the date, time, location, number, and to the extent possible, the age, sex and reproductive condition of the marine mammal(s);

(G) A description of each marine mammal retained by the permit holder in accordance with the marine mammal inventory requirements of § 216.43 (e)(3); and

(H) Any other information that the Office Director may require in the permit.

(ii) *Verification of import*. Within 30 days of an import, the permit holder must verify the importation into the United States of the living marine mammal identified in the permit by submitting updated inventory information in accordance with the inventory requirements of § 216.43 (e)(2).

(c) *Re-export of marine mammals imported into the United States*. (1) Holders of marine mammals imported into the United States under the authority of a public display permit may re-export these marine mammals without the foreign certifications specified in § 216.43 (f)(4)(i) through (iii), provided the marine mammal is returning to the original foreign holder and foreign facility.

(2) Marine mammals re-exported under paragraph (c)(1) of this section are no longer subject to the MMPA transfer notification or reporting requirements.

(3) A holder exporting the U.S. born progeny of the marine mammals identified in paragraph (c)(1) of this section must comply with the MMPA transfer notification and reporting requirements under § 216.43(e) and any export requirement under CITES.

(4) The re-export of a marine mammal to a different holder or facility must conform to the export requirements under § 216.43 (f).

(5) Once a marine mammal is re-exported, the permit holder may not re-import the subject marine mammal unless a new permit to import has been issued by the Office Director pursuant to § 216.43 (b).

(d) *Transfer and/or transport of captive marine mammals within the United States*—Transfer and/or transport of marine mammals legally held for public display within the U.S. does not require a permit provided that the receiver complies with the public display requirements of § 216.43 (b)(3)(i) through (iii), and both holder and receiver comply with the notification requirements of § 216.43 (e). Upon satisfaction of these requirements:

(1) A holder may:

(i) Transfer a marine mammal without physically transporting the marine mammal to another facility/physical location;

(ii) Transport a marine mammal from one facility/physical location to another without transfer, including for purposes of a breeding loan; or

(iii) Transfer a marine mammal and physically transport the marine mammal to another facility/physical location.

(2) A receiver may:

(i) Purchase or otherwise acquire a marine mammal through a transfer without physically transporting the marine mammal from another facility/physical location;

(ii) Transport or receive a marine mammal from one facility or physical location to another without transfer, including for purposes of a breeding loan; or

(iii) Purchase or otherwise acquire an interest in a marine mammal through a transfer, and physically transport the marine mammal from another facility/physical location.

(e) *Notifications and reporting*. Any holder of a marine mammal must comply with the following notification and reporting requirements. If either the holder or receiver fail to meet the public display and/or notification requirements of § 216.43 (b)(3)(i) through (iii) and § 216.43 (e) the conditional right to transfer or transport marine mammals may not be invoked. Holders may obtain complete information regarding submission procedures and reporting from the Permits Division, Office of Protected Resources, 1315 East-West Highway, Silver Spring, MD 20910 or NMFS Marine Mammal Inventory c/o International Species Information System, 12101 Johnny Cake Ridge Road, Apple Valley, MN 55124 8151.

(1) *Fifteen–day notification of transfers/transports of captive marine mammals*. Except as provided in paragraph (e)(3) of this section, the Office Director must receive written notification at least 15 days in advance of any transfer or transport of captive marine mammals held for public display purposes. Holders may submit a Marine Mammal Transport Notification (MMTN) by facsimile, provided the original is forwarded to the Office Director by certified mail within 3 business days. Notification must be provided in the following manner:

(i) The holder and receiver must submit a completed MMTN together with a supporting Marine Mammal Data Sheet (MMDS) for each marine mammal to be transferred. A completed MMTN includes a MMDS for each animal proposed for transfer and/or transport and a certification signed by both the holder and the receiver which provides

that the receiver and/or receiving facility meets the requirements of paragraphs (b)(3)(i) through (iii) of this section.

(ii) In the case of traveling exhibits, the holder must notify the Office Director at least 15 days in advance of each transport from one location to another, unless the Office Director has approved an alternative notification schedule.

(iii) In cases involving the transport of a marine mammal for a school visit or similar outreach event in which the marine mammal will be returning to the original holding facility more than 12 hours after departure, the holder must comply with the 15–day notification requirement. In the absence of 15 days advance notice, the holder must request a transport authorization pursuant to paragraph (e)(3)(i) of this section.

(iv) Upon receipt of a MMTN, the Office Director will acknowledge receipt of the notification and enter the proposed transfer and/or transport dates into the Marine Mammal Inventory database for those marine mammals identified in the MMTN.

(v) A new MMTN must be submitted if:

(A) Transfer and/or transport does not occur within 90 days of the proposed date;

(B) The receiver or facility changes; or

(C) Other animals will be transferred and/or transported.

(2) *Verification of receipt*. Receivers must provide verification within 30 days of the date of transfer and/or transport. Verifications must include a revised MMDS for each marine mammal, indicating the actual date of transfer and/or arrival, the animal name and number assigned by the receiver, and the 8-digit identification number assigned by NMFS. If the holder does not verify the transfer and/or transport or notify the Office Director of a cancellation, the proposed action will be subject to deletion from the inventory database after 90 days.

(3) *Special authorizations*—(i) A holder may receive authorization from the Office Director to transfer and/or transport, but not export, captive marine mammals with less than 15 days advance notification prior to transfer or transport, if the holder and proposed receiver submit a written request for such a transfer and/or transport authorization to the Office Director that includes:

(A) An explanation why the transfer and/or transport must be conducted in less than 15 days,

(B) A completed and signed MMTN, NOAA Form 89–881, and

(C) a MMDS, NOAA Form 89–882, for each affected marine mammal.

(ii) A holder may transfer and/or transport, but may not export, a captive marine mammal without 15 days advance notification or the Office Director's written authorization in the case of an emergency involving the imminent and serious jeopardy to the health or welfare of the marine mammal, provided that within 24 hours of an emergency transfer and/or transport, the holder or the holder's attending veterinarian submits to the Office Director:

(A) A written explanation of the emergency circumstances and justification for the transfer and/or transport, and

(B) A MMDS for each affected marine mammal.

(iii) Upon resolution of the emergency, the holder must notify the Office Director of the subsequent return of the marine mammal to the holder's facility or transfer and/or transport to another facility.

(iv) The Office Director may periodically review emergency transfers and/or transports conducted under the provisions of paragraphs (e)(3)(i) and (ii) of this section. If the Office Director determines that there is a reasonable basis for questioning whether a holder has abused the emergency transfer/transport allowance, the Office Director may notify a holder:

(A) That they are not authorized to conduct emergency transfers or transports; or

(B) Of the conditions under which subsequent emergency transfers/transports may be conducted; and

(C) What steps the holder may take to remove the restrictions imposed under paragraph (e)(3)(iv)(A) or (B) of this section.

(4) *Marine mammal inventory*. The Office Director maintains a computerized Marine Mammal Inventory database of all captive marine mammals subject to the MMPA. To enable the Office Director to maintain this inventory, holders of captive marine mammals must provide an updated MMDS to the Office Director whenever a change in inventory occurs. To satisfy the 30–day requirement for reporting births, deaths, transfers or other changes in inventory, holders must submit by mail or facsimile written reports on a MMDS to the Office Director. The Office Director will not accept telephone notification. This updated MMDS must include:

(i) The name or other identification of the marine mammal involved;

(ii) Its sex;

(iii) Its actual or estimated birth date;

(iv) The date of the holder's acquisition or disposition of the marine mammal;

(v) The source from which the marine mammal was acquired including the location of the stranding or take from the wild, if applicable;

(vi) If a marine mammal is being transferred and/or transported, the name and street address of the receiver and/or receiving facility and the operator of that facility if other than the current holder of the marine mammals being transferred and/or transported; and

(vii) If a marine mammal dies, including stillbirths and animals that undergo euthanasia, the holder must notify the Office Director within 30 days of the date of death. Notification must include the date and cause of death. If the cause of death has not been determined within 30 days, holders must submit an amended notification once the cause of death is determined. A reasonable effort to determine the cause of death must be made by the holder.

(viii) If a marine mammal escapes from a facility or is inadvertently released it must be reported immediately by phone or fax to the Office Director. A status report on the recovery effort and the conditions of escape is required within one week of the event. An updated MMDS noting the escape or release is required within 30 days. The holder must report the results of all reasonable efforts to recapture the marine mammal within 6 months of the escape or release.

(5) *Marine Mammal Inventory Report-Summary (MMIRS) by holder/species*. Upon request of the Office Director, holders of marine mammals subject to the MMPA must review, verify, and correct any discrepancies regarding the marine mammals in their custody and listed in the Marine Mammal Inventory database. Holders may obtain information about the marine mammals listed on their inventory and request a MMIRS for the marine mammals in their collection at any time by sending a request to the NMFS Marine Mammal Inventory at the address listed in paragraph (e)(8) of this section.

(6) *Change of address or trade name*. Holders must notify the Office Director by certified mail 15 days in advance of any change in name, address or ownership. An updated Person/Holder/Facility Sheet, NOAA Form 89–871, should accompany the holder's notification.

(7) *Eligibility*. Holders must notify the Office Director immediately of any other change in operations that adversely affects the holder's ability to meet the criteria set forth in § 216.43 (b)(3),

including but not limited to the expiration, suspension, revocation, of any APHIS registration or license, or voluntary termination upon request of the holder or licensee.

(8) *Submission address.* Effective (30 days after publication of the final rule in the **Federal Register**), all transfer and transport notifications and inventory reports must be submitted to NMFS Marine Mammal Inventory, c/o International Species Information System (ISIS), 1201 Johnny Cake Ridge Road, Apple Valley, MN 55124–8151. Notifications of releases or escapes of marine mammals, collection reports, requests for waivers of the 15–day advance notification requirement, changes in eligibility to hold marine mammals, export notifications, and foreign government certifications, must continue to be provided to the Office Director as specified in § 216.43 (e)(1)(iii),(3), (4)(viii), and (7), and § 216.43 (f).

(f) *Export of captive marine mammals.* Marine mammals may be exported under the authority of this section only for public display. Export of marine mammals legally held for public display within the U.S. does not require a permit provided that the receiver complies with the public display requirements of § 216.43 (b)(3)(i) through (iii), and both holder and receiver comply with the requirements of this section.

(1) Holders intending to export marine mammals to a foreign holder or facility for public display purposes must follow the notification requirements at § 216.43 (e) and ensure the documentation required in paragraphs (f)(3) through (6) of this section is submitted to the Office Director, together with a copy of any export permit required under CITES, at least 15 days in advance of the proposed export.

(2) Persons intending to receive marine mammals for public display by export from the United States must meet the public display criteria at § 216.43 (b)(3)(i) through (iii) and § 216.43 (f)(1). To ensure compliance with this requirement, persons intending to receive marine mammals must submit to the Office Director, pursuant to § 216.43 (f)(4), the following:

(i) A description of their program for education or conservation and identification of the professionally recognized standards upon which their education program is based;

(ii) A letter from APHIS certifying that:

(A) The receiving facility meets standards comparable to those applicable to U.S. licensees and registrants under the AWA, 7 U.S.C. 2131 *et seq.*;

(B) The transportation arrangements between the port of entry and the foreign facility comply with the AWA transportation standards at 9 CFR 3.112 through 3.118; and

(C) If the export does not occur within 1 year of the certification, a new letter from APHIS must be provided. For evaluation under the AWA, persons intending to import marine mammals from the United States should contact APHIS, U.S. Department of Agriculture, Riverdale, MD.

(iii) The name and mailing address of the foreign receiver, the name and street address of the facility where the marine mammals will be maintained, the hours during which the facility is open to the public, and the cost of admission.

(iv) If the foreign receiver maintains more than one public display facility and the marine mammals will be transported among these facilities, the receiver must provide the documentation requested in paragraphs (f)(2)(i) through (iii) of this section for each of the facilities, including a Person/Holder/Facility Sheet, NOAA Form 89–871, for each facility.

(v) If the foreign receiver will lease the marine mammals to a public display facility maintained by any person other than the receiver, the receiver must provide, in addition to the documentation requested in paragraphs (f)(2)(i) through (iii) of this section, a letter from the head of the facility certifying that the facility meets comparable standards under the AWA for the term of the contract.

(4) At least 15 days in advance of any proposed export of a marine mammal from the United States for public display, the Office Director must receive a statement from an appropriate agency of the government of the country where the foreign receiver/facility is located certifying that:

(i) The information submitted by the foreign receiver/facility is accurate;

(ii) The laws and regulations of the foreign government involved permit that government to enforce requirements equivalent to the requirements of the U. S. Marine Mammal Protection Act and U.S. Animal Welfare Act. The foreign government will enforce such requirements, and take protective measures where necessary for marine mammals exported from the United States; and

(5) If the foreign receiver has submitted a government certification as specified in paragraphs (f)(4)(i) through (iii) of this section to the Office Director within the 1–year period leading to the export, the foreign recipient need only submit re-certification of accuracy as required by paragraph (f)(4)(i) of this section.

(6) Documentation, including government certifications submitted under this section, must be provided in English or be accompanied by a certified English translation.

(7) Marine mammals held for public display by U.S. holders that are exported but not transferred may be imported back into the U.S. by the holder without additional MMPA permits, provided all other requirements are met, including appropriate CITES export authorization from the foreign government.

(g) *Seizure of captive marine mammals.* (1) Marine mammals held for public display are subject to seizure under the following circumstances:

(i) The holder does not offer, and is not reasonably likely to offer in the near future, a program for education or conservation purposes that is based upon professionally recognized standards of the public display community;

(ii) The holder does not maintain, and is not reasonably likely to maintain in the near future, facilities for the public display of marine mammals that are open to the public on a regularly scheduled basis, with access not limited or restricted other than the charge of an admission fee;

(iii) The Office Director, with the concurrence of the Secretary of Agriculture, determines that the holder does not possess, and is not reasonably likely to possess in the near future, a registration or license issued pursuant to the Animal Welfare Act (AWA). For purposes of this subparagraph, marine mammals may be subject to seizure upon the expiration, suspension, revocation, or notice of intent to suspend or revoke any registration or license issued by the Secretary of Agriculture.

(2) The holder shall reimburse the Secretary for any costs associated with the seizure of a marine mammal that occurs under paragraph (g)(1) of this section.

TABLE 1 TO § 216.43. SUBMISSION SCHEDULE

Time	Location	
	NMFS (MD)	NMFS c/o ISIS (MN)
Permit Application: At least 90 days in advance	X	
Application Amendment: At least 90 days in advance	X	
Collection Report:Within 30 days	X	
Birth and Death Reports: Within 30 days		X
Other Marine Mammal Inventory Updates: As requested by OD		X
Domestic Transfer Notifications: At least 15 days in advance		X
Export Notifications: At least 15 days in advance	X	
Foreign Government Certifications: At least 15 days in advance	X	
Transfer/Export Verifications: Within 30 days		X
Transfer Authorization Requests: Less than 15 days in advance	X	
Traveling Exhibitor's Transfer Notifications: 15 days in advance unless otherwise arranged with OD	X	
Address/Trade Name Changes: Within 15 business days		X
Termination of Exhibitor's License/Registration: Immediately	X	

[FR Doc. 01–16600 Filed 7–2–01; 8:45 am]

BILLING CODE 3510–22–S

Notices

Federal Register

Vol. 66, No. 128

Tuesday, July 3, 2001

This section of the FEDERAL REGISTER contains documents other than rules or proposed rules that are applicable to the public. Notices of hearings and investigations, committee meetings, agency decisions and rulings, delegations of authority, filing of petitions and applications and agency statements of organization and functions are examples of documents appearing in this section.

DEPARTMENT OF AGRICULTURE

Animal and Plant Health Inspection Service

[Docket No. 01–047–1]

Horse Protection Act; List of Designated Qualified Persons

AGENCY: Animal and Plant Health Inspection Service, USDA.

ACTION: Notice.

SUMMARY: This notice advises the public and the horse industry of the organizations that have a Designated Qualified Person program currently certified by the United States Department of Agriculture and the designated qualified persons currently licensed under each certified organization.

FOR FURTHER INFORMATION CONTACT: Mr. Michael Tuck, Senior Program Analyst, Policy and Program Development, APHIS, 4700 River Road Unit 116, Riverdale, MD 20737–1236; (301) 734–5819.

SUPPLEMENTARY INFORMATION:

Background

The practice known as ''soring'' causes a horse to suffer pain in any of its limbs for the purpose of affecting its performance in the show ring. In 1970, Congress passed the Horse Protection Act (15 U.S.C. 1821–1831), referred to below as the Act, to eliminate the practice of soring by prohibiting the showing, selling, or transporting of sored horses. Exercising its rulemaking authority under the Act, the Animal and Plant Health Inspection Service (APHIS) enforces regulations in 9 CFR part 11, referred to below as the regulations, that prohibit devices and methods that might sore horses.

In 1979, in response to an amendment to the Act, we established regulations under which show management must, to avoid liability for any sore horses that are shown, appoint individuals trained to conduct preshow inspections to detect or diagnose sored horses. These individuals, referred to as designated qualified persons (DQP's), are trained and licensed under industry-sponsored DQP programs that we certify and monitor. The requirements for DQP programs and licensing of DQP's are set forth in § 11.7 of the regulations.

Section 11.7 also requires that we publish a current list of horse industry organizations that have certified DQP programs and a list of licensed DQP's in the **Federal Register** at least once each year. The list reads as follows:

Heart of America Walking Horse Association, Lynn B. Bridwell, President, 4201 North Farm Road 205, Stafford, MO 65757.
Licensed DQP's: Ryan Bennett, Chad Campbell, Jennifer Campbell, Larry Carrigan, Ronnie D. Couseler, Atkon Curelon, A.L. Forgey, Lawanda Foust, Robert B. Foust, R. Dewey Foust, Billy Grooms, Floyd Hampsmire, Philip Mankin, Stephen Mullins, Steve Skopec, Charlie Smart, Robert H. Smith, William Stotler, Jerry Williams, John C. Williams.

Horse Protection Commission, Inc., Donna Benefield, Administrative Director, P.O. Box 1330, Frazier Park, CA 93225.
Licensed DQP's: M. Avila, D. Benefield, D. Collins, L. Connelly, J. Hampton, R. Harris, K. Hester, T. Hubbard, S. Kolbusz, B. Lauer, P. Mitchell, D. Moore, L. Peterson, C. Pitts, C. Shepherd, J. Singleton, P. Snodgrass, V. Stamper, J. Stamper, K. Thompson.

Humane Instruction Technocracy, Inc., Cherie Beatty, 159 Hopkins Bridge Road, Unionville, TN 37180.
Licensed DQP's: Randy Adams, Doug Barlow, Cherie Beatty, Ken DeLana, James Fox, Lisa Harris, Chris Lynch, Fields Richardson, Jim Scullin.

Kentucky Walking Horse Association—HIO, Kenny Smith, HIO Director, Route 6, Box 11, Manchester, KY 40962.
Licensed DQP's: Les W. Acree, Jackie Brown, Ray Burton, Michael Conley, Eddie Ray Davis, Terry Doyle, James Floyd, John Goldey, James M. Goode, J. Scott Helton, Leon Hester, Dave Jividen, Paul Lasure, Ricky McCammon, Rick O'Neal, Curtis Pittman, Ted Poland, Arnold ''Sarg'' Walker, Johnnie Zeller.

Missouri Fox Trotting Horse Breed Association, Inc., Hoover Case, Executive Director, P.O. Box 1027, Ava, MO 65608.
Licensed DQP's: Jan Alford, Julie Alford, Bob Blackwell, Everett Clamp, Kenneth Cochran, Donald J. Daughtery, Gail Geilenfeldt-Freed, Patricia Harris, Deb Heggerston, Mark Landers, Edward Lee, Geno Middleton, Jeanie Nichols, David Ogle, Mike Osborn, Danny Sublett, Shawn Sublett, Lee Yates.

National Horse Show Commission, Inc., Bill Young, Chairperson, P.O. Box 167, Shelbyville, TN 37160.
Licensed DQP's: Melanie Allen, Nolan Benton, Johnny Black, Neal Byrd, Ray Cairnes, Ronnie Campbell, Harry Chaffin, John Cordell, Joe L. Cunningham, Sr., Jessie Davis, Jerry Eaton, William Edwards, Anthony Eubanks, Craig Evans, James Fields, Bob Flynn, Benny Givens, Kathy Givens, Iry Gladney, Jimmy House, Larry R. Landreth, Earl Melton, Andy Messick, Lonnie Messick, Richard Messick, Cary C. Myers, Harlan Pennington, Ricky D. Rutledge, Ronnie Slack, Virginia Stanley, Ricky L. Statham, Charles Thomas, Mark Thomas, Greg Thomason, Melissa Tilley, Clarence Wenham, Ellyn Whitehouse, John F. Wilson.

National Walking Horse Association, Don Bell, Director of Operations, P.O. Box 28, Petersburg, TN 37144.
Licensed DQP's: Don Bell, Hal Bowden, Jim Chipman, Murral R. Johnson, Ralph Lakes, Debbie Matson, Terri Lynn Neuendorf, Jeff Smith, Pamela Wisecup.

Spotted Saddle Horse Breeders and Exhibitors Association, Roger Malone, 1st VP, P.O. Box 1046, Shelbyville, TN 37162.
Licensed DQP's: Joe L. Beard, Marty Coleman, Danny Ray Davis, Tony Edwards, Steve Johnson, Mac McGee, Boyd Melton, E.W. Murray, Russell Phipps, Larry ''Keith'' Smith, Don Woodson.

Western International Walking Horse Association, David Swingley, President, P.O. Box 2075, Wilsonville, OR 97070.
Licensed DQP's: Larry Corbett, Don Douglas, Ross Fox, Dennis Izzi, Terry Jerke, Joe Nelson, Kelly Smith, Dave Swingley, Kim Swingley.

Done in Washington, DC, this 27th day of June 2001.

Bobby R. Acord,

Acting Administrator, Animal and Plant Health Inspection Service.

[FR Doc. 01–16693 Filed 7–2–01; 8:45 am]

BILLING CODE 3410–34–U

DEPARTMENT OF AGRICULTURE

Natural Resources Conservation Service

Notice of Meeting

AGENCY: Department of Agriculture; Natural Resources Conservation Service, USDA.

ACTION: Notice of meetings.

SUMMARY: Notice is hereby given that the United States Department of

Agriculture, Natural Resources Conservation Service (NRCS), will conduct six public forums whereby interested individuals can provide comments and ideas regarding the role, capacity, and capability of private sector vendors in providing technical services related to assisting animal feeding operation (AFO)/concentrated animal feeding operation (CAFO) owners and operators with the development and implementation of comprehensive nutrient management plans (CNMPs), or specific elements of CNMPs. The specific elements of a CNMP that private sector vendors may provide technical services for include:

- Manure and wastewater handling and storage
- Land treatment practices
- Nutrient management
- Record keeping
- Feed management
- Other manure and wastewater utilization activities (alternatives to land application)

The public is invited to attend. Speakers will be limited to 5 minutes and should respond to the questions below. Those who wish to speak at a forum may make arrangements in advance by calling the state contact listed or may sign up at the forum. All are encouraged to provide detailed written answers and comments to the following questions:

1. What do you believe the role of private sector vendors should be in providing technical services to AFO/CAFO owners and operators with the development and implementation of their CNMPs? Is there a distinction in this role with regard to regulated versus non-regulated AFOs?

2. What are the technical capabilities and capacities of private sector vendors in relation to the skills, knowledge, and experience needed to provide technical services associated with the development and/or implementation of CNMPs?

3. How do you see the capabilities and capacities of the private sector vendor community changing over the next few years? Over the next decade?

4. What is needed for a successful public/private partnership that will facilitate AFO/CAFO owners' and operators' development and/or implementation of CNMPs?

Written comments will be accepted at the forums and by mail or facsimile. Written comments must be postmarked or faxed by August 15, 2001 and addressed to: Thomas Christensen, Director, Animal Husbandry and Clean Water Programs, USDA, Natural Resources Conservation Service, 5601 Sunnyside Avenue, Mail Stop 5473, Beltsville, Maryland 20705, FAX: (301) 504–2264.

USDA/Natural Resources and Environment and NRCS leadership will participate in each meeting.

Location	Date	Contact name	Phone
Woodland, California	July 11	Rachel Lopez	(530) 792–5600
Austin, Texas	July 17	Norman Bade	(254) 742–9800
Denver, Colorado	July 20	John Andrews	(720) 544–2834
Raleigh, North Carolina	July 24	Charlene Wood	(919) 873–2102
Frederick, Maryland	July 30	Carol Hollingsworth	(443) 482–2902
Indianapolis, Indiana	July 31	Paula Mulligan	(317) 290–3200

Please call the contact person of the meeting that you wish to attend to obtain specific meeting time and location details.

FOR FURTHER INFORMATION CONTACT: Questions or comments should be directed to Dawn Lamb, Office of the Deputy Chief for Programs, telephone: (202) 720–4527; fax: (202) 720–6559; email: dawn.lamb@usda.gov

Thomas W. Christensen,

Director, Animal Husbandry and Clean Water Programs, USDA/Natural Resources Conservation Service.

[FR Doc. 01–16625 Filed 7–2–01; 8:45 am]

BILLING CODE 3410–16–P

DEPARTMENT OF COMMERCE

Submission For OMB Review; Comment Request

DOC has submitted to the Office of Management and Budget (OMB) for clearance the following proposal for collection of information under the provisions of the Paperwork Reduction Act (44 U.S.C. chapter 35).

Agency: U.S. Census Bureau.

Title: Current Population Survey, October School Enrollment Supplement.

Form Number(s): CPS Automated CAPI Instrument.

Agency Approval Number: 0607–0464.

Type of Request: Revision of a currently approved collection.

Burden: 3,325 hours.

Number of Respondents: 57,000.

Avg Hours Per Response: 3 minutes and 30 seconds.

Needs and Uses: The Census Bureau is requesting clearance for the collection of data concerning the School Enrollment Supplement to be conducted in conjunction with the October Current Population Survey (CPS). The Census Bureau, the Bureau of Labor Statistics, and the National Center for Education Statistics (NCES) sponsor the basic annual school enrollment questions which have been collected annually in the CPS for 40 years. Additional questions will be added to monitor changes in the types of vocational education.

This survey provides information on public/private elementary and secondary school enrollment, and characteristics of private school students and their families, which is used for tracking historical trends and for policy planning and support. This survey is the only source of national data on the age distribution and family characteristics of college students, and the only source of demographic data on preprimary school enrollment. As part of the federal government's efforts to collect data and provide timely information to local governments for policymaking decisions, the survey provides national trends in employment and progress in school.

The data are used by federal agencies; state, county, and city governments; and private organizations responsible for education to formulate and implement education policy. They are also used by employers and analysts to anticipate the composition of the labor force in the future. The NCES will use the data concerning language proficiency, disabilities, and grade retention to study the phenomenon of children being retained in grade.

Affected Public: Individuals or households.

Frequency: Annually.

Respondent's Obligation: Voluntary.

Legal Authority: Title 13 U.S.C., Section 182; Title 29 U.S.C., Sections 1–9.

OMB Desk Officer: Susan Schechter, (202) 395–5103.

Copies of the above information collection proposal can be obtained by

calling or writing Madeleine Clayton, Departmental Paperwork Clearance Officer, (202) 482–3129, Department of Commerce, room 6086, 14th and Constitution Avenue, NW, Washington, DC 20230 (or via the Internet at mclayton@doc.gov).

Written comments and recommendations for the proposed information collection should be sent within 30 days of publication of this notice to Susan Schechter, OMB Desk Officer, room 10201, New Executive Office Building, Washington, DC 20503.

Dated: June 28, 2001.

Madeleine Clayton,

Departmental Paperwork Clearance Officer, Office of the Chief Information Officer.

[FR Doc. 01–16647 Filed 7–2–01; 8:45 am]

BILLING CODE 3510–07–P

DEPARTMENT OF COMMERCE

Submission For OMB Review; Comment Request

DOC has submitted to the Office of Management and Budget (OMB) for clearance the following proposal for collection of information under the provisions of the Paperwork Reduction Act (44 U.S.C. chapter 35).

Agency: U.S. Census Bureau.

Title: 2002 New York City Housing and Vacancy Survey.

Form Number(s): H–100, H–105, H–108, H–100(L), H–100(L)A.

Agency Approval Number: 0607–0757.

Type of Request: Reinstatement, with change, of an expired collection.

Burden: 11,200 hours.

Number of Respondents: 17,200.

Avg Hours Per Response: 35 minutes.

Needs and Uses: The Census Bureau plans to conduct the 2002 New York City Housing and Vacancy Survey (NYCHVS) under contract for the City of New York. The purpose of the survey is to measure the supply, condition, and vacancy rate of housing in the City. Vacancy rate is the primary factor in determining the continuation of rent control regulations. Other survey information is used by city and state agencies for planning purposes as well as the private sector for business decisions. The laws of New York require such a survey to be conducted every three years.

Census Bureau interviewers will conduct personal visit interviews at a sample of housing units in the city, the vast majority of which are apartments in apartment buildings. Basic demographic information will be collected from residents along with information about living conditions (rent, facilities, maintenance, neighborhood, etc.). This information will be collected from rental agents or other knowledgable persons in the case of vacant units. A small number of reinterviews with agents or landlords will be conducted for quality assurance purposes. We will also determine, by observation only, if a sample of units known to have been lost to the housing inventory have been reconverted for residential use.

Affected Public: Individuals or households, Businesses or other for-profit.

Frequency: Every 3 years.

Respondent's Obligation: Voluntary.

Legal Authority: Title 13 U.S.C., Section 8b.

OMB Desk Officer: Susan Schechter, (202) 395–5103.

Copies of the above information collection proposal can be obtained by calling or writing Madeleine Clayton, Departmental Paperwork Clearance Officer, (202) 482–3129, Department of Commerce, room 6086, 14th and Constitution Avenue, NW, Washington, DC 20230 (or via the Internet at mclayton@doc.gov).

Written comments and recommendations for the proposed information collection should be sent within 30 days of publication of this notice to Susan Schechter, OMB Desk Officer, room 10201, New Executive Office Building, Washington, DC 20503.

Dated: June 28, 2001.

Madeleine Clayton,

Departmental Paperwork Clearance Officer, Office of the Chief Information Officer.

[FR Doc. 01–16648 Filed 7–2–01; 8:45 am]

BILLING CODE 3510–07–P

DEPARTMENT OF COMMERCE

Foreign-Trade Zones Board

[Docket 27–2001]

Foreign-Trade Zone 158—Jackson, MS; Application for Subzone Status, Nissan North America, Inc., Plant (Motor Vehicles), Canton, MS

An application has been submitted to the Foreign-Trade Zones Board (the Board) by the Vicksburg-Jackson Foreign-Trade Zone, Inc., grantee of FTZ 158, requesting special-purpose subzone status for the motor vehicle manufacturing plant of Nissan North America, Inc. (NNA)(a subsidiary of Nissan Motor Co., Ltd., of Japan) located in Canton, Mississippi. The application was submitted pursuant to the provisions of the Foreign-Trade Zones Act, as amended (19 U.S.C. 81a–81u), and the regulations of the Board (15 CFR Part 400). It was formally filed on June 26, 2001.

The NNA plant (1,350 acres/ 2.6 million sq.ft.) is to be located on Nissan Drive adjacent to U.S. Highway 51 in Canton (Madison County), Mississippi, some 20 miles north of Jackson. The facility, currently under construction, will be used to produce light-duty passenger vehicles (pickup trucks, sport utility vehicles, minivans) for export and the domestic market. At full capacity, the facility (up to 4,000 employees) will manufacture up to approximately 250,000 vehicles annually. Components to be purchased from abroad (approximately 44% of material value) would include: engines and parts of engines, labels, body parts and trim, fasteners, catalytic converters, parts of steering systems, brake fittings, half shafts, transmissions and parts of transmissions, differentials, bearings and bearing housings, flywheels/ pulleys, wiring harnesses, handles/ knobs, gaskets, fasteners, carpet sets, windshields and windows, springs, relays, and switches (duty rate range: free—8.6%). Engines and transmissions would be sourced from NNA's production facility in Dechard, Tennessee (Subzone 78A-Site 2), which is currently undergoing a capital expansion for this activity. The application indicates that NNA's domestic sourcing will increase in the future.

FTZ procedures would exempt NNA from Customs duty payments on the foreign components used in export production (forecasted to be 6% of shipments). On its domestic sales and exports to NAFTA countries, NNA would be able to choose the duty rate that applies to finished passenger vehicles (2.5%) for the foreign inputs noted above that have higher rates. Customs duties would be deferred and possibly reduced on foreign status production equipment. The application indicates that subzone status would help improve the plant's international competitiveness.

In accordance with the Board's regulations, a member of the FTZ Staff has been designated examiner to investigate the application and report to the Board.

Public comment on the application is invited from interested parties. Submissions (original and three copies) shall be addressed to the Board's Executive Secretary at the address below. The closing period for their receipt is September 4, 2001. Rebuttal comments in response to material submitted during the foregoing period may be submitted during the subsequent 15-day period (to September 17, 2001).

A copy of the application and the accompanying exhibits will be available for public inspection at each of the following locations:

U.S. Department of Commere, Export Assistance Center 704 E. Main Street, Raymond, MS 39154.

Office of the Executive Secretary, Foreign-Trade Zones Board, U.S. Department of Commerce, Room 4008, 14th Street & Constitution Avenue, NW., Washington, DC 20230–0002

Dated: June 26, 2001.

Dennis Puccinelli,

Executive Secretary.

[FR Doc. 01–16705 Filed 7–2–01; 8:45 am]

BILLING CODE 3510–DS–P

DEPARTMENT OF COMMERCE

International Trade Administration

Application for Duty-Free Entry of Scientific Instrument

Pursuant to section 6(c) of the Educational, Scientific and Cultural Materials Importation Act of 1966 (Pub. L. 89–651; 80 Stat. 897; 15 CFR part 301), we invite comments on the question of whether an instrument of equivalent scientific value, for the purposes for which the instrument shown below is intended to be used, is being manufactured in the United States.

Comments must comply with 15 CFR 301.5(a)(3) and (4) of the regulations and be filed within 20 days with the Statutory Import Programs Staff, U.S. Department of Commerce, Washington, DC 20230. Applications may be examined between 8:30 A.M. and 5 P.M. in Room 4211, U.S. Department of Commerce, 14th Street and Constitution Avenue, NW., Washington, DC.

Docket Number: 01–014.

Applicant: Woods Hole Oceanographic Institution, 266 Woods Hole Road, Woods Hole, MA 02543.

Instrument: (2) Low-level beta Multicounter Systems, Model GM–25–5. Manufacturer: Riso National Labs, Denmark.

Intended Use: The instrument is intended to be used for sampling the ocean at different depths to estimate carbon fluxes out of the upper water. This number is needed to plug into ocean/atmosphere models to estimate such things as global warming.

Application accepted by Commissioner of Customs: June 11, 2001.

Gerald A. Zerdy,

Program Manager, Statutory Import Programs Staff.

[FR Doc. 01–16706 Filed 7–2–01; 8:45 am]

BILLING CODE 3510–DS–P

COMMITTEE FOR THE IMPLEMENTATION OF TEXTILE AGREEMENTS

Adjustment of Import Limits for Certain Cotton and Man-Made Fiber Textiles and Textile Products Produced or Manufactured in India

June 27, 2001.

AGENCY: Committee for the Implementation of Textile Agreements (CITA).

ACTION: Issuing a directive to the Commissioner of Customs adjusting limits.

EFFECTIVE DATE: July 3, 2001.

FOR FURTHER INFORMATION CONTACT: Ross Arnold, International Trade Specialist, Office of Textiles and Apparel, U.S. Department of Commerce, (202) 482–4212. For information on the quota status of these limits, refer to the Quota Status Reports posted on the bulletin boards of each Customs port, call (202) 927–5850, or refer to the U.S. Customs website at http://www.customs.gov. For information on embargoes and quota re-openings, refer to the Office of Textiles and Apparel website at http://otexa.ita.doc.gov.

SUPPLEMENTARY INFORMATION:

Authority: Section 204 of the Agricultural Act of 1956, as amended (7 U.S.C. 1854); Executive Order 11651 of March 3, 1972, as amended.

The current limits for certain categories are being increased for carryover and the 5% adjustment for 100% cotton apparel items of handloomed fabric.

A description of the textile and apparel categories in terms of HTS numbers is available in the CORRELATION: Textile and Apparel Categories with the Harmonized Tariff Schedule of the United States (see **Federal Register** notice 65 FR 82328, published on December 28, 2000). Also see 65 FR 79344, published on December 19, 2000.

D. Michael Hutchinson,

Acting Chairman, Committee for the Implementation of Textile Agreements.

Committee for the Implementation of Textile Agreements

June 27, 2001.

Commissioner of Customs,
Department of the Treasury, Washington, DC 20229

Dear Commissioner: This directive amends, but does not cancel, the directive issued to you on December 13, 2000, by the Chairman, Committee for the Implementation of Textile Agreements. That directive concerns imports of certain cotton, man–made fiber, silk blend and other vegetable fiber textiles and textile products, produced or manufactured in India and exported during the twelve-month period which began on January 1, 2001 and extends through December 31, 2001.

Effective on July 3, 2001, you are directed to increase the limits for the following categories, as provided for under the Uruguay Round Agreement on Textiles and Clothing:

Category	Adjusted twelve-month limit [1]
Levels in Group I	
218	21,224,532 square meters.
219	94,113,507 square meters.
313	56,788,990 square meters.
314	11,245,609 square meters.
315	18,888,117 square meters.
317	52,137,749 square meters.
334/634	190,142 dozen.
335/635	846,510 dozen.
336/636	1,210,430 dozen.
340/640	2,458,888 dozen.
342/642	1,714,186 dozen.
347/348	863,553 dozen.
351/651	362,346 dozen.

[1] The limits have not been adjusted to account for any imports exported after December 31, 2000.

The Committee for the Implementation of Textile Agreements has determined that these actions fall within the foreign affairs exception to the rulemaking provisions of 5 U.S.C. 553(a)(1).

Sincerely,

D. Michael Hutchinson,

Acting Chairman, Committee for the Implementation of Textile Agreements.

[FR Doc. 01–16700 Filed 7–2–01; 8:45 am]

BILLING CODE 3510–DR–S

COMMITTEE FOR THE IMPLEMENTATION OF TEXTILE AGREEMENTS

Adjustment of Import Limits for Certain Cotton, Wool and Man-Made Fiber Textile Products Produced or Manufactured in the Philippines

June 27, 2001.

AGENCY: Committee for the Implementation of Textile Agreements (CITA).

ACTION: Issuing a directive to the Commissioner of Customs adjusting limits.

EFFECTIVE DATE: July 3, 2001.

FOR FURTHER INFORMATION CONTACT: Naomi Freeman, International Trade Specialist, Office of Textiles and Apparel, U.S. Department of Commerce, (202) 482–4212. For information on the quota status of these limits, refer to the Quota Status Reports posted on the bulletin boards of each Customs port, call (202) 927–5850, or refer to the U.S. Customs website at http://www.customs.ustreas.gov. For information on embargoes and quota re-openings, refer to the Office of Textiles and Apparel website at http://otexa.ita.doc.gov.

SUPPLEMENTARY INFORMATION:

Authority: Section 204 of the Agricultural Act of 1956, as amended (7 U.S.C. 1854); Executive Order 11651 of March 3, 1972, as amended.

The current limits for certain categories are being increased for the recrediting of unused carryforward.

A description of the textile and apparel categories in terms of HTS numbers is available in the CORRELATION: Textile and Apparel Categories with the Harmonized Tariff Schedule of the United States (see **Federal Register** notice 65 FR 82328, published on December 28, 2000). Also see 65 FR 69742, published on November 20, 2000.

D. Michael Hutchinson,

Acting Chairman, Committee for the Implementation of Textile Agreements.

Committee for the Implementation of Textile Agreements

June 27, 2001.

Commissioner of Customs,
Department of the Treasury, Washington, DC 20229.

Dear Commissioner: This directive amends, but does not cancel, the directive issued to you on November 14, 2000, by the Chairman, Committee for the Implementation of Textile Agreements. That directive concerns imports of certain cotton, wool and man–made fiber textiles and textile products and silk blend and other vegetable fiber apparel, produced or manufactured in the Philippines and exported during the twelve-month period which began on January 1, 2001 and extends through December 31, 2001.

Effective on, July 3, 2001, you are directed to increase the limits for the following categories, as provided for under the Uruguay Round Agreement on Textiles and Clothing:

Category	Adjusted twelve-month limit [1]
Levels in Group I	
338/339	3,260,602 dozen.
351/651	973,889 dozen.
433	4,129 dozen.
638/639	2,847,072 dozen.

[1] The limits have not been adjusted to account for any imports exported after December 31, 2000.

The Committee for the Implementation of Textile Agreements has determined that these actions fall within the foreign affairs exception to the rulemaking provisions of 5 U.S.C. 553(a)(1).

Sincerely,
D. Michael Hutchinson,
Acting Chairman, Committee for the Implementation of Textile Agreements.

[FR Doc.01–16701 Filed 7–2–01; 8:45 am]

BILLING CODE 3510–DR–S

DEPARTMENT OF DEFENSE

Office of the Secretary

Proposed Collection; Comment Request

AGENCY: Office of the Under Secretary of Defense (Personnel and Readiness), DOD.

ACTION: Notice.

In compliance with Section 3506(c)(2)(A) of the Paperwork Reduction Act of 1995, the Office of the Under Secretary of Defense (Personnel and Readiness) announces the following proposed reinstatement of a public information collection and seeks public comment on the provisions thereof. Comments are invited on: (a) Whether the proposed collection of information is necessary for the proper performance of the functions of the agency, including whether the information shall have practical utility; (b) the accuracy of the agency's estimate of burden of the proposed information collection; (c) ways to enhance the quality, utility, and clarity of the information to be collected; and (d) ways to minimize the burden of the information collection on respondents, including through the use of automated collection techniques or other forms of information technology.

DATES: Consideration will be given to all comments received by September 4, 2001.

ADDRESSES: Written comments and recommendations on the proposed information collection should be sent to the Office of the Under Secretary of Defense (Personnel and Readiness) (For Management Policy) (Military Personnel Policy)/Accession Policy, ATTN: Major Brenda Leong, 4000 Defense Pentagon, Washington, DC 20301–4000.

FOR FURTHER INFORMATION CONTACT: To request more information on this proposed information collection or to obtain a copy of the proposal and associated collection instruments, please write to the above address or call at (703) 695–5529.

Title, Associated Form, and OMB Control Number: Request for Reference, DD Form 370, OMB Control Number: 0704–0167.

Needs and Uses: This information collection requirement is necessary to obtain personal reference data, in order to request a waiver, on a military applicant who has committed a civil or criminal offense and would otherwise be disqualified for entry to the Armed Forces of the United States. The DD Form 370 is used to obtain references information evaluating the character, work habits, and attitudes of an applicant from a person of authority or standing within the community.

Affected Public: Individuals or households, non-profit or other for profit businesses, non-profit institutions, local, tribal and state agencies. Normally, this form would be completed by responsible community leaders such as school officials, ministers and law enforcement officials.

Annual Burden Hours: 12,500.

Number of Respondents: 75,000.

Responses Per Respondent: 1.

Average Burden Per Response: 10 minutes per respondent.

Frequency: On occasion.

SUPPLEMENTARY INFORMATION:

Summary of Information Collection

This information is collected to provide the Armed Services with specific background information on an applicant. History of criminal activity, arrests, or confinement is disqualifying for military service. An applicant, with such a disqualifier, is required to submit references from community leaders who will attest to his or her character, attitudes or work habits. The DD Form 370 is the method of information collection which requests an evaluation and reference from a specific individual, within the community, who has the knowledge of the applicant's habits, behaviors, personality and character. The information will be used to determine suitability of the applicant for

military service and the issuance of a waiver for acceptance.

June 11, 2001.

Patricia L. Toppings,

Alternate OSD Federal Register Liaison Officer, Department of Defense.

[FR Doc. 01–16678 Filed 7–2–01; 8:45 am]

BILLING CODE 5001–08–M

DEPARTMENT OF DEFENSE

Office of the Secretary

U.S. Court of Appeals for the Armed Forces Proposed Rule Changes

ACTION: Notice of Proposed Changes to the Rules of Practice and and Procedure of the United States Court of Appeals for the Armed Forces.

SUMMARY: This notice announces the following proposed changes to Rules 13(c), 20 (b) and (c), 21 (b), 24, and 41(a) of the Rules of Practice and Procedure, United States Court of Appeals for the Armed Forces for public notice and comment:

Proposed Revision to Rule 13(c)

Attorneys

Rule 13. Qualifications to Practice

(a) [Same]

(b) [Same]

(c) Each applicant shall file with the Clerk an application for admission on the form prescribed by the Court, together with an application fee ***in an amount prescribed by Court order,*** and a certificate from the presiding judge, clerk, or other appropriate officer of a court specified in (b) above * * *

(d) [Same]

Proposed Revision to Rule 20(b) and (c)

Rule 20. Form of Petition for Grant of Review

* * * * *

(b) Form to be used by an appellant's counsel. A petition for grant of review under Rule 18(a)(1) filed by counsel on behalf of an appellant will be substantially in the following form:

(Signature of counsel)

(Typed name of counsel)

(Address of counsel)

(Telephone no. of counsel)

(E-mail address, if any)

(Date and manner of filing—*see* Rules 36 and 39))

(c) An appellant or counsel on behalf of an appellant shall file a petition for grant of review in the manner and within the time limits set forth in Rule 19(a). ***Upon receipt, the Clerk shall stamp the petition indicating the date it was received and, if filed by mail under Rule 36(c), shall retain the envelope showing the postmark thereon.***

Proposed Revision to Rule 21(b)

Rule 21. Supplement to Petition for Grant of Review

(a) Review on petition for grant of review requires a showing of good cause. Good cause must be shown by the appellant in the supplement to the petition, which shall state with particularity the error(s) claimed to be materially prejudicial to the substantial rights of the appellant. *See* Article 59(a), UCMJ, 10 USC § 859(a).

(b) The supplement to the petition shall be filed in accordance with the applicable time limit set forth in Rule 19(a)(5)(A) or (B), shall include an Appendix required by Rule 24(a), shall conform to the provisions of Rules 24(b), 35A, and 37, and shall contain:

(1) A statement of the errors assigned for review by the Court;

(2) A statement of statutory jurisdiction, including:

(A) the statutory basis of the Court of Criminal Appeals jurisdiction;

(B) the statutory basis upon which this Court's jurisdiction is invoked;

(3) A statement of the case setting forth a concise chronology, including **all relevant dates.** The chronology shall specify: **(A)** the results of the trial; **(B)** the actions of the intermediate reviewing authorities and the Court of Criminal Appeals; **(C) the disposition of a petition for reconsideration or rehearing, if filed;** and (D) any other pertinent information regarding the proceedings, **[including, if set forth in the record, the date when service upon the accused of the decision of the Court of Criminal Appeals was effected.];**

(4) A statement of facts of the case material to the errors assigned, including specific page references to each relevant portion of the record of trial;

(5) A direct and concise argument showing why there is good cause to grant the petition, demonstrating with particularity why the errors assigned are materially prejudicial to the substantial rights of the appellant. Where applicable, the supplement to the petition shall also indicate whether the court below has:

(A) Decided a question of law which has not been, but should be, settled by this Court;

(B) Decided a question of law in a way in conflict with applicable decisions of (i) this Court, (ii) the Supreme Court of the United States, (iii) another Court of Criminal Appeals, or (iv) another panel of the same Court of Criminal Appeals;

(C) Adopted a rule of law materially different from that generally recognized in the trial of criminal cases in the United States district courts;

(D) Decided the validity of a provision of the UCMJ or other act of Congress, the Manual for Courts-Martial, a service regulation, a rule of court or a custom of the service the validity of which was directly drawn into question in that court;

(E) Decided the case (i) en banc or (ii) by divided vote;

(F) So far departed from the accepted and usual course of judicial proceedings, or so far sanctioned such a departure by a court-martial or other person acting under the authority of the UCMJ, as to call for an exercise of this Court's power of supervision; or

(G) Taken inadequate corrective action after remand by the Court subsequent to grant of an earlier petition in the same case and that appellant wishes to States; and

(6) A certificate of filing and service in accordance with Rule 39(e).

(c)(1)*Answer/reply in Article 62, UCMJ, appeals.* An appellee's answer to the supplement to the petition for grant of review in an Article 62, UCMJ, 10 U.S.C § 862 (1983), case shall be filed no later than 10 days after the filing of such supplement. A reply may be filed by the appellant no later than 5 days after the filing of the appellee's answer.

(2) *Answer/reply in other appeals.* An appellee's answer to the supplement to the petition for grant of review in all other appeal cases may be filed no later than 30 days after the filing of such supplement, *see* Rule 21(e); as a discretionary alternative in the event a formal answer is deemed unwarranted, an appellee may file with the Clerk of the Court a short letter, within 10 days after the filing of the appellant's supplement to the petition under Rule 21, setting forth one of the following alternative positions: (i) that the United States submits a general opposition to the assigned error(s) of law and relies on its brief filed with the Court of Criminal Appeals; or (ii) that the United States does not oppose the granting of the petition (for some specific reason, such as an error involving an unsettled area of the law). A reply may be filed by the appellant no later than 10 days after the filing of the appellee's answer.

(d) The Court may, in its discretion, examine the record in any case for the purpose of determining whether there appears to be plain error not assigned by the appellant. The Court may then

specify and grant review of any such errors as well as any assigned errors which merit review.

(e) Where no specific errors are assigned in the supplement to the petition, the Court will proceed to review the petition without awaiting an answer thereto. *See* Rule 19(a)(5).

(f) An appellant or counsel for an appellant may move to withdraw his petition at any time. *See* Rule 30. [Amended October 1, 1987; amended July 16, 1990, effective August 15, 1990; amended October 12, 1994; amended January 20, 1999, effective February 1, 1999.]

Proposed Revision to Rule 24

Rule 24. Form, Content, and Page Limitations

(a) Form and content. All briefs shall conform to the printing, copying, and style requirements of Rule 37, shall be legible, and shall be substantially as follows:

IN THE UNITED STATES COURT OF APPEALS
FOR THE ARMED FORCES

UNITED STATES,	)	
(Appellee)	)	
(Appellant)	)	BRIEF ON BEHALF
(Respondent)	)	OF (APPELLANT,
v.	)	APPELLEE, ETC.)
_____	)	
(Full typed name, rank,	)	Crim. App. Dkt. No. _____
& service of accused)	)	
(Service no. ___),	)	USCA Dkt. No. _____
(Appellant)	)	
(Appellee)	)	
(Petitioner)	)	

Index of Brief
[See Rule 37(c)(1)]

Table of Cases, Statutes, and Other Authorities

Issue(s) Presented

[Set forth, *in a concise statement*, each issue granted review by the Court, raised in the certificate for review or mandatory review case, or presented in the petition for extraordinary relief, writ-appeal petition, or petition for new trial. Issues presented will be set forth in upper case letters.]

Statement of Statutory Jurisdiction

[Set forth the statutory basis of the Court of Criminal Appeals jurisdiction and the statutory basis for this Court's jurisdiction.]

Statement of the Case

[Set forth a concise chronology, including **all relevant dates, to include: (A)** the results of the ~~accused's~~ trial~~,~~; **(B)** action**s of the intermediate reviewing authorities** ~~by the convening authority~~ and the Court of Criminal Appeals;~~, and as well as any other pertinent information regarding the proceedings, *including, where applicable, the date the petition for review was granted.*]~~

(C) the disposition of a petition for reconsideration or rehearing, if filed; and (D) any other pertinent information regarding the proceedings, *including, where applicable, the date the petition for review was granted.*]

Statement of Facts

[Set forth a concise statement of the facts of the case material to the issue or issues presented, including specific page references to each relevant portion of the record of trial. Answers may adopt the appellant's or petitioner's statement of facts if there is no dispute, may state additional facts, or, if there is a dispute, may restate the facts as they appear from the appellee's or respondent's viewpoint. The repetition of uncontroverted matters is not desired.]

Summary of Argument

[*Each brief and answer shall contain a summary of argument, suitably paragraphed to correspond to each issue presented. The summary should be a succinct but accurate and clear condensation of the arguments made in the body of the brief.*]

Argument

[Discuss briefly the point of law presented, citing and quoting such authorities as are deemed pertinent. *The argument must also include for each issue presented a statement of the applicable standard of review. The standard of review may appear in the discussion of each issue or under a separate heading.*]

Conclusion

[State the relief sought as to each issue presented, for example, reversal of the Court of Criminal Appeals decision and dismissal of the charges, grant of a new trial, the extraordinary relief sought, etc. No particular form of language is required, so long as the brief concludes with a clear prayer for specific Court action.]

BILLING CODE 5001–08–C

Appendix

[The brief of the appellant or petitioner shall include an appendix containing a copy of the Court of Criminal Appeals decision, unpublished opinions cited in the brief, and relevant extracts of rules and regulations. The appellee or respondent shall similarly file an appendix containing a copy of any additional unpublished opinions and relevant extracts of rules and regulations cited in the answer.]

(Signature of counsel)

(Typed name of counsel)

(Address of counsel)

(Telephone no. of counsel)

Certificate of Filing and Service

I certify that a copy of the foregoing was [mailed] [delivered] to the Court and [mailed] [delivered] to (enter name of each counsel of record) on

(date)

(Typed name and signature)

(Address and telephone no.)

(b) Page limitations. Unless otherwise authorized by order of the Court or by motion of a party granted by the Court (*see* Rule 30), the page limitations for briefs filed with the Court, not including appendices, shall be as follows:

(1) Briefs of the appellants/petitioners shall not exceed 50 pages;

(2) Answers of the appellees/respondents shall not exceed 50 pages;

(3) Replies of the appellants/petitioners shall not exceed 15 pages.

Proposed Revision to Rule 41(a)

Rule 41. Photographing, Televising, *Recording*, or Broadcasting of Hearings

(a) The photographing, televising, ***recording,*** or broadcasting of any session of the Court or other activity relating thereto is prohibited within the confines of the courthouse unless authorized by the Court.

(b) Any violation of this rule will be deemed a contempt of this Court and, after due notice and hearing, may be punished accordingly. See 18 U.S.C Sec. 401.

DATES: Comments on the proposed changes must be received by (60 days from date of publication).

ADDRESSES: Forward written comments to William A. DeCicco, Clerk of the Court, United States Court of Appeals for the Armed Forces, 450 E Street, Northwest, Washington, DC 20442–0001.

FOR FURTHER INFORMATION CONTACT: William A. DeCicco, Clerk of the Court, telephone (202) 761–1448 (Ext. 600).

Rules Advisory Committee Comment on Rule 13(c)

The current rule requires payment of $25.00 for admission to the Court's Bar. Due to an increase in the cost of printing bar admission certificates, the fee needs to be changed. Rather than simply changing the amount in the Rule, however, an easier solution is to allow the Court to modify the amount of the fee by court order instead of a formal rule change. This procedure is similar to that of other courts and will make future changes less cumbersome. It will also give the Court more flexibility.

Rules Advisory Committee Comment on Rule 20(b) and (c)

The proposed revision to Rule 20(b) will require counsel to include on the petition for grant of review an e-mail address, if any, and information regarding the date and manner of filing. Having counsel's e-mail address will aid the Court in contacting counsel should questions arise while the case is pending. Requiring the date and manner of filing will clarify exactly when the petition was filed and whether it was mailed or delivered by hand to the Court. The proposed revision to Rule 20(c) requires the Clerk to stamp the petition with the date it was received and, for petitions filed by mail, to retain the envelope showing the postmark thereon. This change will better enable the Court to record the filing date of the petition in case the timeliness of filing becomes an issue in the case.

Rules Advisory Committee Comment on Rule 21(b)

Revised subsection (b)(2) is based upon Supreme Court Rule 14(e)(iv) and Federal Rule of Appellate Procedure 28(a)(4). Its purpose is to demonstrate that the petition is based upon a decision or order from which review may be sought and that the petition falls within the ambit of the Court's jurisdictional authority to grant review.

An example of a statement of statutory jurisdiction under this subsection would read as follows:

The jurisdictional of the [service] Court of Criminal Appeals rested upon Article 66(b)(1), UCMJ. This Court's jurisdiction is revoked under Article 67(a)(3), UCMJ.

The purpose of the revision to the extent subsection (b)(2) is to provident a concise but comprehensive summary of the history of the case with respect to which review is sought. The changes will make more information available to the Court, including the statutory basis for invoking the jurisdiction of the Court. To the extent that dates relevant to the jurisdiction of the Court are established in the record, they are to be included in this section.

Rules Advisory Committee Comment on Rule 24

This revision is based upon Supreme Court Rule 24(e) and Federal Rule of Appellate Procedure 28(a)(4). As in the case of the amendment to Rule 21(b), its purpose is to set out the statutory authorities vesting this Court with jurisdiction.

The ''Statement of the Case'' is modified to require a brief but comprehensive summary of the prior disposition of the case.

Rules Advisory Committee Comment on Rule 41

This revision adds a prohibition on the recording of appellate sessions within the confines of the courthouse unless authorized by the Court. This is consistent with the practice of other appellate courts and includes both video and audio record of proceedings.

Dated: June 25, 2001.

L.M. Bynum,

Alternate OSD Federal Register Liaison Officer, DoD.

[FR Doc. 01–16539 Filed 7–2–01; 8:45 am]

BILLING CODE 5001–08–M

DEPARTMENT OF EDUCATION

Submission for OMB Review; Comment Request

AGENCY: Department of Education.

SUMMARY: The Leader, Regulatory Information Management Group, Office of the Chief Information Officer invites comments on the submission for OMB review as required by the Paperwork Reduction Act of 1995.

DATES: Interested persons are invited to submit comments on or before August 2, 2001.

ADDRESSES: Written comments should be addressed to the Office of Information and Regulatory Affairs, Attention: Lauren Wittenberg, Acting Desk Officer, Department of Education, Office of Management and Budget, 725 17th Street, N.W., Room 10235, New Executive Office Building, Washington, D.C. 20503 or should be electronically mailed to the internet address *Lauren_Wittenberg@omb.eop.gov.*

SUPPLEMENTARY INFORMATION: Section 3506 of the Paperwork Reduction Act of 1995 (44 U.S.C. Chapter 35) requires that the Office of Management and Budget (OMB) provide interested Federal agencies and the public an early opportunity to comment on information collection requests. OMB may amend or waive the requirement for public consultation to the extent that public participation in the approval process would defeat the purpose of the information collection, violate State or Federal law, or substantially interfere with any agency's ability to perform its statutory obligations. The Leader, Regulatory Information Management Group, Office of the Chief Information Officer, publishes that notice containing proposed information collection requests prior to submission of these requests to OMB. Each proposed information collection, grouped by office, contains the following: (1) Type of review requested, e.g. new, revision, extension, existing or reinstatement; (2) Title; (3) Summary of the collection; (4) Description of the need for, and proposed use of, the information; (5) Respondents and frequency of collection; and (6) Reporting and/or

Recordkeeping burden. OMB invites public comment.

Dated: June 27, 2001.

John Tressler,

Leader, Regulatory Information Management, Office of the Chief Information Officer.

Office of Postsecondary Education

Type of Review: Reinstatement, with change, of a previously approved collection for which approval has expired.

Title: Report of Financial Need and Certification for the Jacob K. Javits Fellowship Program (JS).

Frequency: Annually.

Affected Public: Not-for-profit institutions.

Reporting and Recordkeeping Hour Burden: Responses: 100; Burden Hours: 400.

Abstract: The Department of Education (ED) uses this form to collect financial need information of students who have Javits fellowships and certification of academic progress of Javits fellows from institutions where Javits fellows attend. ED uses the data to calculate fellowship amounts for individuals and the total amount of program funds to be sent to the institution.

Requests for copies of the proposed information collection request may be accessed from *http://edicsweb.ed.gov/owa-cgi/owa/browsecoll?psn=01401,* or should be addressed to Vivian Reese, Department of Education, 400 Maryland Avenue, SW, Room 4050, Regional Office Building 3, Washington, D.C. 20202–4651. Requests may also be electronically mailed to the internet address *OCIO__RIMG@ed.gov* or faxed to 202–708–9346. Please specify the complete title of the information collection when making your request.

Comments regarding burden and/or the collection activity requirements should be directed to Joe Schubart at (202) 708–9266. Individuals who use a telecommunications device for the deaf (TDD) may call the Federal Information Relay Service (FIRS) at 1–800–877–8339.

[FR Doc. 01–16643 Filed 7–2–01; 8:45 am]

BILLING CODE 4000–01–P

DEPARTMENT OF ENERGY

Office of Science

Office of Science Financial Assistance Program Notice 01–27: Advanced Detector Research Program

AGENCY: U.S. Department of Energy (DOE).

ACTION: Notice inviting grant applications.

SUMMARY: The Division of High Energy Physics of the Office of Science (SC), U.S. Department of Energy (DOE), hereby announces its interest in receiving grant applications for support under its Advanced Detector Research Program. Applications should be from investigators who are currently involved in experimental high energy physics, and should be submitted through a U.S. academic institution. The purpose of this program is to support the development of the new detector technologies needed to perform future high energy physics experiments.

DATES: To permit timely consideration for award in fiscal year 2002, formal applications submitted in response to this notice should be received before October 30, 2001.

Applicants are requested to submit a letter of intent by September 25, 2001, which includes the title of the proposal, the name of the principal investigator(s), the requested funding and a one-page abstract. Failure to submit a letter of intent will not negatively prejudice a responsive formal application submitted in a timely manner. Electronic submission of letters of intent is both acceptable and preferred.

ADDRESSES: Completed formal applications referencing Program Notice 01–27 should be forwarded to: U.S. Department of Energy, Office of Science, Grants and Contracts Division, SC–64, 19901 Germantown Road, Germantown, Maryland 20874–1290, ATTN: Program Notice 01–27. The above address must also be used when submitting applications by U.S. Postal Service Express Mail, any other commercial mail delivery service, or when hand carried by the applicant. An original and seven copies of the application must be submitted. Due to the anticipated number of reviewers, it would be helpful for each applicant to submit an additional four copies of the application. In addition, for this notice, project descriptions must be 25 pages or less, including tables and figures, but excluding attachments. The application must also contain an abstract or project summary, letters of intent from all non-funded collaborators, and short curriculum vitae of all senior personnel.

Letters of intent referencing Program Notice 01–27, should be forwarded to: U.S. Department of Energy, Office of Science, Division of High Energy Physics, SC–221, 19901 Germantown Road, Germantown, MD 20874–1290, ATTN: Michael Procario. Letters of intent can also be submitted via E-mail at the following E-mail address: *michael.procario@science.doe.gov.*

FOR FURTHER INFORMATION CONTACT: Dr. Michael Procario, Division of High Energy Physics, SC–221 (GTN), U.S. Department of Energy, 19901 Germantown Road, Germantown, Maryland 20874–1290. Telephone: (301) 903–2890. E-Mail: *michael.procario@science.doe.gov.*

SUPPLEMENTARY INFORMATION: Future high energy physics experiments will require higher performance detectors to exploit the higher beam energies and intensities of new or upgraded accelerators. Higher performance detectors are also needed to probe for new physical processes in both accelerator and non-accelerator based experiments. Proposed detector research should be driven by the anticipated needs of experiments to be built within the foreseeable future, as well as upgrades to current experiments. Interesting technologies would include, but not be limited to charged particle track detectors, calorimeters or particle identification detectors that are less sensitive to radiation, have higher resolution, are lower in cost, or can be read out faster than currently available detectors.

It is anticipated that in fiscal year 2002, approximately $500,000 will be awarded in total, subject to availability of appropriated funds. The number of awards will be determined by the number of excellent applications and the total funds available for this program. Multiple year funding of grant awards is possible, with funding provided on an annual basis subject to availability of funds. Cost sharing is encouraged but not required. It is expected that the final development or fabrication of detectors for specific experiments will not be funded by this program.

Applicants are welcome to collaborate with researchers in other institutions, such as universities, industry, non-profit organizations, federal laboratories and Federally Funded Research and Development Centers (FFRDCs), including DOE National Laboratories, such as Fermi National Accelerator Laboratory. In the case of collaborative applications submitted from different institutions that are directed at a single research activity, each application must have a different scope of work and a qualified principal investigator who is responsible for the research effort being performed at his or her institution. There must be a single technical description of the proposed work, and separate face pages and budget pages for each institution. The scope of work at

each institution must be clearly specified. While collaborations with researchers at FFRDCs are encouraged, no funds will be provided to those organizations under this notice. The procedure for submitting a collaborative application can be accessed via the web at *http://www.science.doe.gov/production/grants/Colab.html.* This section provides specific details regarding collaborating institutions and states, ''The lead organization must submit their own grant application plus the other collaborator's applications to DOE in one package with a cover letter, which describes the role to be played by each organization, the managerial arrangements, and the advantages of the multi-organizational effort.''

Applications will be subjected to scientific merit review (peer review) and will be evaluated against the following criteria, which are listed in descending order of importance as set forth in 10 CFR part 605.10(d):

1. Scientific and/or technical merit of the project;
2. Appropriateness of the proposed method or approach;
3. Competency of applicant's personnel and adequacy of proposed resources; and
4. Reasonableness and appropriateness of the proposed budget.

In considering item 1 particular attention will be paid to:

- The importance of the physics that motivates developing the proposed detector,
- Whether the proposed research is generic detector research that will benefit more than one experiment,
- The magnitude of the potential impact versus the risk of failure.

General information about development and submission of applications, eligibility, limitations, evaluations and selection processes, and other policies and procedures are contained in the Application Guide for the Office of Science Financial Assistance Program and 10 CFR Part 605. Electronic access to the application guide and required forms is available on the World Wide Web at: *http://www.sc.doe.gov/production/grants/grants.html.*

The Catalog of Federal Domestic Assistance Number for this program is 81.049, and the solicitation control number is ERFAP 10 CFR part 605.

Issued in Washington, DC on June 26, 2001.

John Rodney Clark,

Associate Director of Science for Resource Management.

[FR Doc. 01–16696 Filed 7–2–01; 8:45 am]

BILLING CODE 6450–01–U

DEPARTMENT OF ENERGY

Office of Science

DOE/NSF Nuclear Science Advisory Committee

AGENCY: Department of Energy.

ACTION: Notice of open meeting.

SUMMARY: This notice announces a meeting of the Department of Energy/National Science Foundation Nuclear Science Advisory Committee (NSAC). Federal Advisory Committee Act (Public Law 92–463, 86 Stat. 770) requires that public notice of these meetings be announced in the **Federal Register**.

DATES: Monday, July 23, 2001; 8:30 a.m. to 6:00 p.m. and Tuesday, July 24, 2001; 8:30 a.m. to 12:00 p.m.

ADDRESSES: Doubletree Hotel, 1750 Rockville Pike, Regency Conference Room, Rockville, Maryland 20852–1699

FOR FURTHER INFORMATION CONTACT: Cathy A. Hanlin, U.S. Department of Energy; 19901 Germantown Road; Germantown, Maryland 20874–1290; Telephone: 301–903–3613

SUPPLEMENTARY INFORMATION:

Purpose of Meeting

To provide advice and guidance on a continuing basis to the Department of Energy and the National Science Foundation on scientific priorities within the field of basic nuclear science research.

Tentative Agenda

Monday, July 23, 2001, and Tuesday, July 24, 2001

- Report from the Department of Energy.
- Report from the National Science Foundation.
- Status Report on the NSAC Long Range Plan.
- Presentation of Charge to NSAC to Review and Evaluate the Scientific Opportunities in the DOE Low Energy Nuclear Physics Subprogram.
- Status Report on the Michigan State University National Superconducting Cyclotron Laboratory.
- Public Comment (10-minute rule).

Public Participation

The meeting is open to the public. If you would like to file a written statement with the Committee, you may do so either before or after the meeting. If you would like to make oral statements regarding any of these items on the agenda, you should contact Cathy A. Hanlin at 301–903–3613. You must make your request for an oral statement at least 5 business days before the meeting. Reasonable provision will be made to include the scheduled oral statements on the agenda. The Chairperson of the Committee will conduct the meeting to facilitate the orderly conduct of business. Public comment will follow the 10-minute rule.

Minutes

The minutes of the meeting will be available for public review and copying within 30 days at the Freedom of Information Public Reading Room; Room 1E–190; Forrestal Building; 1000 Independence Avenue, SW.; Washington, D.C., between 9 a.m. and 4 p.m., Monday through Friday, except Federal holidays.

Issued at Washington, D.C. on June 27, 2001.

Belinda Hood,

Acting Deputy Advisory Committee Management Officer.

[FR Doc. 01–16697 Filed 7–2–01; 8:45 am]

BILLING CODE 6450–01–P

DEPARTMENT OF ENERGY

Environmental Management Site-Specific Advisory Board, Fernald

AGENCY: Department of Energy.

ACTION: Notice of open meeting.

SUMMARY: This notice announces a meeting of the Environmental Management Site-Specific Advisory Board (EM SSAB), Fernald. The Federal Advisory Committee Act (Pub. L. No. 92–463, 86 Stat. 770) requires that public notice of these meetings be announced in the **Federal Register**.

DATES: Thursday, July 12, 2001, 6 p.m.–9 p.m.

ADDRESSES: Fernald Environmental Management Project Site, Services Building Conference Room, 7400 Willey Road, Hamilton, OH 45219.

FOR FURTHER INFORMATION CONTACT: Doug Sarno, Phoenix Environmental, 6186 Old Franconia Road, Alexandria, VA 22310, at (703) 971–0030 or (513) 648–6478, or e-mail; *djsarno@theperspectivesgroup.com.*

SUPPLEMENTARY INFORMATION:

Purpose of the Board

The purpose of the Board is to make recommendations to the Department of Energy in the areas of environmental restoration, waste management, and related activities.

Tentative Agenda

6:00 p.m.—Call to Order
6:00–6:30 p.m.—Chair's Remarks and Ex Officio Announcements

6:30–7:30 p.m.—Feasibility Study for On-Site Facilities
7:30–8:15 p.m.—Update on Site Issues
8:15–8:45 p.m.—Identify Issues for Annual Retreat Planning
8:45–9:00 p.m.—Public Comment
9:00 p.m.—Adjourn

Public Participation

The meeting is open to the public. Written statements may be filed with the Board chair either before or after the meeting. Individuals who wish to make oral statements pertaining to agenda items should contact the Board chair at the address or telephone number listed below. Requests must be received five days prior to the meeting and reasonable provision will be made to include the presentation in the agenda. The Deputy Designated Federal Officer, Gary Stegner, Public Affairs Office, Ohio Field Office, U.S. Department of Energy, is empowered to conduct the meeting in a fashion that will facilitate the orderly conduct of business. Each individual wishing to make public comment will be provided a maximum of five minutes to present their comments. This Notice is being published less than 15 days before the date of the meeting due to the late resolution of programmatic issues.

Minutes

The minutes of this meeting will be available for public review and copying at the Freedom of Information Public Reading Room, 1E–190, Forrestal Building, 1000 Independence Avenue, SW, Washington, DC, 20585 between 9 a.m. and 4 p.m., Monday–Friday, except Federal holidays. Minutes will also be available by writing to the Fernald Citizens' Advisory Board, c/o Phoenix Environmental Corporation, MS–76, Post Office Box 538704, Cincinnati, OH 43253–8704, or by calling the Advisory Board at (513) 648–6478.

Issued at Washington, DC on June 27, 2001.

Belinda G. Hood,

Acting Deputy Advisory Committee Management Officer.

[FR Doc. 01–16698 Filed 7–2–01; 8:45 am]

BILLING CODE 6450–01–P

DEPARTMENT OF ENERGY

Environmental Management Site-Specific Advisory Board, Los Alamos

AGENCY: Department of Energy.

ACTION: Notice of open meeting.

SUMMARY: This notice announces a meeting of the Environmental Management Site-Specific Advisory Board (EM SSAB), Los Alamos. The Federal Advisory Committee Act (Pub. L. No. 92–463, 86 Stat. 770) requires that public notice of these meetings be announced in the **Federal Register**.

DATES: Wednesday, July 25, 2001; 6 p.m.–9 p.m.

ADDRESSES: Cities of Gold Hotel, 10–A Cities of Gold Road, Santa Fe, New Mexico 87501.

FOR FURTHER INFORMATION CONTACT: Ann DuBois, Northern New Mexico Citizens' Advisory Board, 1640 Old Pecos Trail, Suite H, Santa Fe, NM 87505. Phone (505) 989–1662; fax (505) 989–1752 or e-mail: *adubois@doeal.gov.*

SUPPLEMENTARY INFORMATION:

Purpose of the Board

The purpose of the Board is to make recommendations to DOE and its regulators in the areas of environmental restoration, waste management, and related activities.

Tentative Agenda

6:00–7:00 p.m.—Opening Activities
7:00–7:30 p.m.—Public Comments
7:30–8:15 p.m.—Discussion on Recommendation requesting DOE fund a research and development project to reduce High Wattage containers
8:15–9:00 p.m.—Committee Reports: Monitoring and Surveillance, Waste Management, Environmental Restoration, Community Outreach, Bylaws, Budget

Other Board business will be conducted as necessary.

This agenda is subject to change at least one day in advance of the meeting.

Public Participation

The meeting is open to the public. Written statements may be filed with the Committee either before or after the meeting. Individuals who wish to make oral statements pertaining to agenda items should contact Ann DuBois at the address or telephone number listed above. Requests must be received five days prior to the meeting and reasonable provision will be made to include the presentation in the agenda. The Deputy Designated Federal Officer is empowered to conduct the meeting in a fashion that will facilitate the orderly conduct of business. Each individual wishing to make public comment will be provided a maximum of five minutes to present their comments at the beginning of the meeting. This **Federal Register** notice is being published less than 15 days prior to the meeting due to programmatic issues that had to be resolved prior to the meeting date.

Minutes

Minutes of this meeting will be available for public review and copying at the Freedom of Information Public Reading Room, 1E–190, Forrestal Building, 1000 Independence Avenue, SW, Washington, DC 20585 between 9 a.m. and 4 p.m., Monday–Friday, except Federal holidays. Minutes will also be available at the Public Reading Room located at the Board's office at 1640 Old Pecos Trail, Suite H, Santa Fe, NM. Hours of operation for the Public Reading Room are 9 a.m.–4 p.m. on Monday through Friday. Minutes will also be made available by writing or calling Ann DuBois at the Board's office address or telephone number listed above. Minutes and other Board documents are on the Internet at: *http:www.nnmcab.org.*

Issued at Washington, DC on June 27, 2001.

Belinda Hood,

Acting Deputy Advisory Committee Management Officer.

[FR Doc. 01–16699 Filed 7–2–01; 8:45 am]

BILLING CODE 6405–01–P

DEPARTMENT OF ENERGY

Federal Energy Regulatory Commission

[Docket No. RP01–459–000]

Eastern Shore Natural Gas Company; Notice of Proposed Changes in FERC Gas Tariff

June 27, 2001.

Take notice that on June 19, 2001 Eastern Shore Natural Gas Company (ESNG) tendered for filing as part of its FERC Gas Tariff, Second Revised Volume No. 1, certain revised tariff sheets in the above captioned docket bear a proposed effective date of July 1, 2001.

ESNG states that the purpose of this instant filing is to track rate changes attributable to a storage service purchased from Columbia Gas Transmission (Columbia) under its Rate Schedule FSS. The costs of the above referenced storage service comprise the rates and charges payable under ESNG's respective Rate Schedule CFSS. This tracking filing is being made pursuant to Section 3 of ESNG's Rate Schedule CFSS.

ESNG states that copies of the filing have been served upon its jurisdictional customers and interested State Commissions.

Any person desiring to be heard or to protest said filing should file a motion to intervene or a protest with the Federal Energy Regulatory Commission, 888 First Street, NE., Washington, DC 20426, in accordance with sections 385.214 or 385.211 of the Commission's

Rules and Regulations. All such motions or protests must be filed in accordance with section 154.210 of the Commission's Regulations. Protests will be considered by the Commission in determining the appropriate action to be taken, but will not serve to make protestants parties to the proceedings. Any person wishing to become a party must file a motion to intervene. Copies of this filing are on file with the Commission and are available for public inspection in the Public Reference Room. This filing may be viewed on the web at http://www.ferc.fed.us/online/rims.htm (call 202–208–2222 for assistance). Comments, protests, and interventions may be filed electronically via the internet in lieu of paper. See, 18 CFR 395.2001(a)(1)(iii) and the instructions on the Commission's web site at http://www.ferc.fed.us/efi/doorbell.htm.

Linwood A. Watson, Jr.,

Acting Secretary.

[FR Doc. 01–16640 Filed 7–2–01; 8:45 am]

BILLING CODE 6717–01–M

DEPARTMENT OF ENERGY

Federal Energy Regulatory Commission

[Docket No. CP01–69–001]

Petal Gas Storage, L.L.C., Notice of Amendment

June 27, 2001.

Take notice that on June 19, 2001, Petal Gas Storage, L.L.C. (Petal), 1001 Louisiana Street, Houston, Texas 77002, filed in Docket No. CP01–69–001 an amendment to its initial application filed in Docket No. CP01–69–000, requesting authority to revise the rate Petal will charge the Southern Company Services, Inc. (Southern Company) for firm transportation service on the pipeline and the recourse rate proposed in the original application all as more fully set forth in the application which is on file with the Commission and open to public inspection. The filing may be viewed at *http://www.rimsweb1.ferc.fed.us/rims.q?rp2~intro*. (call 202–208–2222 for assistance).

On January 23, 2001, Docket No. CP00–69–000, Petal filed to construct and operate approximately 59.0 miles of bi-directional 36-inch diameter pipeline, compression and appurtenant facilities that would commence at the terminus of Petal's storage header facility approximately 5.5 miles east of Hattiesburg, Mississippi and terminate adjacent to an existing Southern Natural Gas Company Compressor Station approximately two miles southwest of Enterprise, Mississippi. As noted in the application, the purpose of the project is to enable Petal to connect its existing storage complex with several interstate pipelines.

In the amended application, Petal states that it has revised the earlier December 22, 2000 Discount Agreement with Southern Company such that Southern Company shall pay the lesser of: (i) A monthly reservation rate of $1.20 per MMBtu or (ii) Petal's maximum FTS reservation rate.

Petal also states that it has revised its recourse rate to account for a longer depreciation period. Petal initially requested a 20-year depreciation period which corresponded with the term of the agreement with Southern Company. Petal now proposes a 40-year depreciation period (2.5% per year) reflecting the life of the proposed facilities. The longer depreciation period yields a monthly reservation recourse rate of $2.2862 per MMBtu.

Any questions regarding this application should be directed to Mr. David E. Maranville, Senior Counsel, Petal Gas Storage, L.L.C., 1001 Louisiana Street, Houston, Texas 77002–2511 or call (713) 420–3525.

There are two ways to become involved in the Commission's review of this project. First, any person wishing to obtain legal status by becoming a party to the proceedings for this project should, on or before July 18, 2001, file with the Federal Energy Regulatory Commission, 888 First Street, NE., Washington, DC 20426, a motion to intervene in accordance with the requirements of the Commission's Rules of Practice and Procedure (18 CFR 385.214 or 385.211) and the Regulations under the NGA (18 CFR 157.10). A person obtaining party status will be placed on the service list maintained by the Secretary of the Commission and will receive copies of all documents filed by the applicant and by all other parties. A party must submit 14 copies of filings made with the Commission and must mail a copy to the applicant and to every other party in the proceeding. Only parties to the proceeding can ask for court review of Commission orders in the proceeding.

However, a person does not have to intervene in order to have comments considered. The second way to participate is by filing with the Secretary of the Commission, as soon as possible, an original and two copies of comments in support of or in opposition to this project. The Commission will consider these comments in determining the appropriate action to be taken, but the filing of a comment alone will not serve to make the filer a party to the proceeding. The Commission's rules require that persons filing comments in opposition to the project provide copies of their protests only to the party or parties directly involved in the protest.

Persons who wish to comment only on the environmental review of this project should submit an original and two copies of their comments to the Secretary of the Commission. Environmental commenters will be placed on the Commission's environmental mailing list, will receive copies of the environmental documents, and will be notified of meetings associated with the Commission's environmental review process. Environmental commenters will not be required to serve copies of filed documents on all other parties. However, the non-party commenters will not receive copies of all documents filed by other parties or issued by the Commission (except for the mailing of environmental documents issued by the Commission) and will not have the right to seek court review of the Commission's final order.

The Commission may issue a preliminary determination on non-environmental issues prior to the completion of its review of the environmental aspects of the project. This preliminary determination typically considers such issues as the need for the project and its economic effect on existing customers of the applicant, on other pipelines in the area, and on landowners and communities. For example, the Commission considers the extent to which the applicant may need to exercise eminent domain to obtain rights-of-way for the proposed project and balances that against the non-environmental benefits to be provided by the project. Therefore, if a person has comments on community and landowner impacts from this proposal, it is important either to file comments or to intervene as early in the process as possible.

Comments, protests and interventions may be filed electronically via the internet in lieu of paper. See, 18 CFR 385.2001(a)(1)(iii) and the instructions on the Commission's web site at http://www.ferc.fed.us/efi/doorbell.htm.

If the Commission decides to set the application for a formal hearing before an Administrative Law Judge, the Commission will issue another notice describing that process. At the end of the Commission's review process, a

final Commission order approving or denying a certificate will be issued.

Linwood A. Watson, Jr.,

Acting Secretary.

[FR Doc. 01–16638 Filed 7–2–01; 8:45 am]

BILLING CODE 6717–01–M

DEPARTMENT OF ENERGY

Federal Energy Regulatory Commission

[Docket No. CP01–388–000]

Transcontinental Gas Pipe Line Corporation; Notice of Application

June 27, 2001.

Take notice that on June 18, 2001, Transcontinental Gas Pipe Line Corporation (Transco), P.O. Box 1396, Houston, Texas 77251–1096, filed in Docket No. CP01–388–000 an application pursuant to section 7(c) of the Natural Gas Act (NGA) and Part 157(A) of the regulations of the Federal Energy Regulatory Commission (Commission), for a certificate of public convenience and necessity authorizing Transco's Momentum Expansion Project (Momentum), an incremental expansion of Transco's existing pipeline system which will provide 525,896 dekatherms per day (dt/d) of new firm transportation capacity to serve increased market demand in the Southeastern region of the United States by a proposed in-service date of May 1, 2003, all as more fully set forth in the application which is on file with the Commission and open to public inspection. The filing may be viewed on the web at *http://www.rimsweb1.ferc.fed.us/rims.q?rp2-intro* (call 202–208–2222 for assistance).

Specifically, Transco states that it proposes to construct and operate the following facilities on its mainline pipeline system:

1. 9.22 miles of 42-inch diameter pipeline loop from Mile Post 632.89 on Transco's mainline in Amite County, Mississippi to Mile Post 642.03 in Pike County, Mississippi (the Magnolia Loop);

2. 7.90 miles of 42-inch diameter pipeline loop from Mile Post 732.65 on Transco's mainline in Jones County, Mississippi to Mile Post 740.50 (the suction side of Compressor Station No. 80) in Jones County (the Seminary Loop);

3. 16.06 miles of 42-inch diameter pipeline loop from Mile Post 756.94 on Transco's mainline in Clarke County, Mississippi to Mile Post 772.80 in Clarke County (the Hale Loop);

4. 30.00 miles of 48-inch diameter pipeline loop from Mile Post 860.78 on Transco's mainline in Perry County, Alabama to Mile Post 890.61 (the suction side of Compressor Station No. 100) in Chilton County, Alabama (the Jones Loop);

5. 3.49 miles of 42-inch diameter pipeline loop from Mile Post 905.74 on Transco's mainline in Chilton County, Alabama to Mile Post 909.20 in Chilton County (the Richville Loop);

6. 21.54 miles of 42-inch diameter pipeline loop from Mile Post 926.87 (the discharge side of Compressor Station No. 105) on Transco's mainline in Coosa County, Alabama to Mile Post 948.13 in Tallapoosa County, Alabama (the Kellyton Loop);

7. 7.51 miles of 42-inch diameter pipeline loop from Mile Post 1,124,74 (the discharge side of Compressor Station No. 130) on Transco's mainline in Madison County, Georgia to Mile Post 1,132.23 in Elbert County, Georgia (the Bowman Loop);

8. 4.18 miles of 42-inch diameter pipeline loop from Mile Post 1,201.71 on Transco's mainline in Spartanburg County, South Carolina to Mile Post 1,205.81 (the suction side of Compressor Station No. 140) in Spartanburg County (the Greenville Loop);

9. The installation of one new 15,000 horsepower compressor unit at Transco's existing Compressor Station No. 90, which is located in Marengo County, Alabama;

10. The installation of one new 15,000 horsepower compressor unit at Transco's existing Compressor Station No. 105, which is located in Coosa County, Alabama;

11. The installation of one new 15,000 horsepower compressor unit at Transco's existing Compressor Station No. 110, which is located in Randolph County, Alabama;

12. The uprating of an existing 18,975 horsepower compressor unit (Unit No. 3) to 22,500 horsepower at Transco's existing Compressor Station No. 115, which is located in Coweta County, Georgia;

13. The installation of one new 15,000 horsepower compressor unit at Transco's existing Compressor Station No. 125, which is located in Walton County, Georgia;

14. The installation of gas coolers for existing Unit No. 18 at Transco's existing Compressor Station No. 130, which is located in Madison County, Georgia; and

15. The installation of one new 15,000 horsepower compressor unit with gas coolers and the installation of high-pressure fuel injection on existing Unit No. 10 at Transco's existing Compressor Station No. 160, which is located in Rockingham County, North Carolina.

Transco states that it estimates that the proposed facilities will cost approximately $300 million. Transco states that the construction and operation of the proposed facilities will not have a significant impact on human health or the environment. The proposed facilities, for the most part, will be installed either entirely within or immediately adjacent to existing pipeline or utility rights-of-way and Transco's existing compressor station yards. Transco certifies that the proposed facilities will be designed, constructed, inspected, tested, operated and maintained in accordance with all applicable safety standards and plans for maintenance and inspection.

Transco states that it held an open season from August 31 through September 29, 2000, during which it received written requests from potential shippers desiring new firm transportion service to be made available as a result of the Momentum project. As a result of the open season, Transco executed precedent agreements with the following nineteen shippers: Athens Development Company, L.L.C. (85,000 dt/d); Calpine Energy Services, L.P. (30,000 dt/d); Cardinal FG (3,400 dt/d); Cargill Inc. (750 dt/d); Carolina Power & Light Company (75,000 dt/d); City of Buford, Georgia (2,070 dt/d); City of Covington, Georgia (518 dt/d); City of Elberton, Georgia (207 dt/d); City of Lawrenceville, Georgia (10,350 dt/d); City of Madison, Georgia (207 dt/d); City of Sugar Hill, Georgia (776 dt/d); City of Winder, Georgia (518 dt/d); Clinton-Newberry Natural Gas Authority (1,500 dt/d); Exelon Generating Company, L.L.C. (80,000 dt/d); Fort Hill Natural Gas Authority (3,000 dt/d); Genpower Anderson, L.L.C. (60,000 dt/d); Hartwell Development Company, L.L.C. (85,000 dt/d); Oglethorpe Power Corporation (An Electric Membership Corporation) (81,600 dt/d); and Sylacauga Utilities Board (6,000 dt/d). Transco states that 100% of the firm capacity to be created by the Momentum project is subscribed to by these nineteen shippers.

Transco states that the firm transportation service under the Momentum project will be provided under Rate Schedule FT of Transco's FERC Gas Tariff, Volume No. 1, and Transco's blanket certificate under Part 284 (G) of the Commission's regulations. Transco states that the proposed cost-based resources rates for the Momentum project are based on a straight fixed-variable rate design methodology and an incremental cost of service.

Transco states that it requests that the Commission issue a preliminary

determination on the non-environmental aspects of this proposal by December 1, 2001 and a final order granting the authorizations requested herein by April 15, 2002.

Any questions regarding this application should be directed to Toi Anderson, Transcontinental Gas Pipe Line Corporation, P.O. 1396, Houston, Texas 77251–1396 or call (713) 215–4540. In addition, Transco states that it will establish a toll-free telephone number so that interested parties can call with questions about the Momentum project.

There are two ways to become involved in the Commission's review of this project. First, any person wishing to obtain legal status by becoming a party to the proceedings for this project should, on or before July 18, 2001, file with the Federal Energy Regulatory Commission, 888 First Street, NE, Washington, DC 20426, a motion to intervene in accordance with the requirements of the Commission's Rules of Practice and Procedure (18 CFR 385.214 or 385.211) and the Regulations under the NGA (18 CFR 157.10). A person obtaining party status will be placed on the service list maintained by the Secretary of the Commission and will receive copies of all documents filed by the applicant and by all other parties. A party must submit 14 copies of filings made with the Commission and must mail a copy to the applicant and to every other party in the proceeding. Only parties to the proceeding can ask for court review of Commission orders in the proceeding.

However, person does not have to intervene in order to have comments considered. The second way to participate is by filing with the Secretary of the Commission, as soon as possible, an original and two copies of comments in support of or in opposition to this project. The Commission will consider these comments in determining the appropriate action to be taken, but the filing of a comment alone will not serve to make the filer a party to the proceeding. The Commission's rules require that persons filing comments in opposition to the project provide copies of their protests only to the party or parties directly involved in the protest.

Persons who wish to comment only on the environmental review of this project should submit an original and two copies of their comments to the Secretary of the Commission. Environmental commenters will be placed on the Commission's environmental mailing list, will receive copies of the environmental documents, and will be notified of meetings associated with the Commission's environmental review process. Environmental commenters will not be required to serve copies of filed documents on all other parties. However, the non-party commenters will not receive copies of all documents filed by other parties or issued by the Commission (except for the mailing of environmental documents issued by the Commission) and will not have the right to seek court review of the Commission's final order.

The Commission may issue a preliminary determination on non-environmental issues prior to the completion of its review of the environmental aspects of the project. This preliminary determination typically considers such issues as the need for the project and its economic effect on existing customers of the applicant, on other pipelines in the area, and on landowners and communities. For example, the Commission considers the extent to which the applicant may need to exercise eminent domain to obtain rights-of-way for the proposed project and balances that against the non-environmental benefits to be provided by the project. Therefore, if a person has comments on community and landowner impacts from this proposal, it is important either to file comments or to intervene as early in the process as possible.

Comments and protests may be filed electronically via the internet in lieu of paper. See, 18 CFR 385.2001(a)(1)(iii) and the instructions on the Commission's web site at *http://www.ferc.fed.us/efi/doorbell.htm.*

If the Commission decides to set the application for a formal hearing before an Administrative Law Judge, the Commission will issue another notice describing that process. At the end of the Commission's review process, a final Commission order approving or denying a certificate will be issued.

Linwood A. Watson, Jr.,

Acting Secretary.

[FR Doc. 01–16639 Filed 7–2–01; 8:45 am]

BILLING CODE 6717–01–M

DEPARTMENT OF ENERGY

Federal Energy Regulatory Commission

[Docket No. EL01–95–000, *et al.*]

Kinder Morgan Power Company, *et al.*; Electric Rate and Corporate Regulation Filings

June 26, 2001.

Take notice that the following filings have been made with the Commission:

1. Kinder Morgan Power Co.

[Docket No. EL01–95–000]

Take notice that on June 15, 2001, Kinder Morgan Power Company (Petitioner), on behalf of certain grantor trusts, business trusts and/or limited liability companies of which financial institutions would be the sole beneficiaries or members filed with the Federal Energy Regulatory Commission (Commission), a petition for declaratory order disclaiming jurisdiction and request for expedited consideration.

Petitioner is seeking a disclaimer of jurisdiction on connection with a lease financing involving three Facilities under development.

Comment date: July 16, 2001, in accordance with Standard Paragraph E at the end of this notice.

2. Tucson Electric Power Company

Docket Nos. ER01–208–003, ER00–771–005

Take notice that on June 20, 2001, Tucson Electric Power Company (Tucson) tendered for filing its compliance filing in response to the Commission's order dated November 30, 2000, which required Tucson to modify its Protocol Manual found as Attachment K to its open access transmission tariff.

Comment date: July 11, 2001, in accordance with Standard Paragraph E at the end of this notice.

3. Progress Energy on Behalf of Carolina Power & Light Company

[Docket No. ER01–1708–001]

Take notice that on June 20, 2001, Carolina Power & Light Company (CP&L) amended the Service Agreement originally filed in this docket to reflect the correct Service Agreement number. Service to this eligible buyer will be in accordance with the terms and conditions of CP&L's Market-Based Rates Tariff, FERC Electric Tariff No. 4, for sales of capacity and energy at market-based rates. Copies of the filing were served upon the North Carolina Utilities Commission and the South Carolina Public Service Commission.

CP&L requests an effective date of June 1, 2001 for this Service Agreement.

Comment date: July 11, 2001, in accordance with Standard Paragraph E at the end of this notice.

4. Fountain Valley Power, L.L.C.

[Docket No. ER01–1784–001

Take notice that on June 20, 2001, Fountain Valley Power, L.L.C. and Public Service Company of Colorado, tendered for filing with the Federal Energy Regulatory Commission (Commission), revised First Substitute Service Agreement No. 1 in accordance with the Commission's June 11, 2001 Order in Docket No. ER01–1784–000.

Comment date: July 11, 2001, in accordance with Standard Paragraph E at the end of this notice.

5. Illinois Power Company

[Docket No. ER01–1789–001]

Take notice that on June 20, 2001, Illinois Power Company (Illinois Power), 500 South 27th Street, Decatur, Illinois 65251–2200, filed with the Commission a service agreement designation as required by Order No. 614 and the Letter Order issued on May 24, 2001 in this docket.

Comment date: July 11, 2001, in accordance with Standard Paragraph E at the end of this notice.

6. Warren Power, LLC

[Docket No. ER01–1804–001]

Take notice that on June 20, 2001, Warren Power, LLC tendered a compliance filing for authorization to sell power at market-based rates. Copies of this filing have been served on the Arkansas Public Service Commission, Mississippi Public Service Commission, Louisiana Public Service Commission, Public Utility Commission of Texas, and the Council of the City of New Orleans.

Comment date: July 11, 2001, in accordance with Standard Paragraph E at the end of this notice.

7. Beacon Generating LLC

[Docket No. ER01–2355–000]

Take notice that on June 19, 2001, Becaon Generating LLC (Beacon), tendered for filing with the Federal Energy Regulatory Commission (Commission), a Petition requesting acceptance of Beacon's Initial Rate Schedule FERC No. 1, Waivers and Blanket Authority.

Comment date: July 10, 2001, in accordance with Standard Paragraph E at the end of this notice.

8. Xcel Energy Services Inc.

[Docket No. ER01–2357–000]

Take notice that on June 20, 2001, Xcel Energy Services Inc. (XES), on behalf of Southwestern Public Service Company (Southwestern), submitted for filing a Transaction Agreement and Master Power Sale Agreement (Master Agreement) between Southwestern and Midwest Energy, Inc., The Master Agreement is an umbrella service agreement under Southwestern's Rate Schedule for Market-Based Power Sales (FERC Electric Tariff, Second Revised Volume No. 3). XES requests that this agreement become effective on May 31, 2001.

Comment date: July 11, 2001, in accordance with Standard Paragraph E at the end of this notice.

9. Virginia Electric and Power Company

[Docket No. ER01–2362–000]

Take notice that on June 20, 2001, Virginia Electric and Power Company (Dominion Virginia Power) tendered for filing two unexecuted Generator Interconnection and Operating Agreements (Interconnection Agreements) with Old Dominion Electric Cooperative (Old Dominion) for the Louisa CT Project and the Marsh Run Project. The Interconnection Agreements set forth the terms and conditions under which Dominion Virginia Power will provide interconnection service for the two projects. Dominion Virginia Power requests an effective date of August 20, 2001 for the two Interconnection Agreements.

Copies of the filing were served upon Old Dominion and the Virginia State Corporation Commission.

Comment date: July 11, 2001, in accordance with Standard Paragraph E at the end of this notice.

10. PPL EnergyPlus, LLC

[Docket No. ER01–2363–000]

Take notice that on June 20, 2001, PPL EnergyPlus, LLC (PPL EnergyPlus) filed with the Commission a Generation Supply Agreement between PPL EnergyPlus and PPL Electric Utilities Corporation. PPL EnergyPlus requests that the Commission permit the Generation Supply Agreement to become effective on January 1, 2002.

PPL EnergyPlus states that it has served a copy of this filing on PPL Electric Utilities Corporation.

Comment date: July 11, 2001, in accordance with Standard Paragraph E at the end of this notice.

11. California Independent System Operator Corporation

[Docket No. ER01–2364–000]

Take notice that the California Independent System Operator Corporation, on June 20, 2001, tendered for filing an Amendment to Schedule 1 of the Participating Generator Agreement between the ISO and Fresno Cogeneration Partners, LP (Fresno Cogen) for acceptance by the Commission. The ISO states that this filing has been served on Fresno Cogen and the California Public Utilities Commission.

The ISO is requesting waiver of the 60-day notice requirement to allow the Participating Generator Agreement to be made effective June 15, 2001.

Comment date: July 11, 2001, in accordance with Standard Paragraph E at the end of this notice.

12. California Independent System Operator Corporation

[Docket No. ER01–2365–000]

Take notice that the California Independent System Operator Corporation, on June 20, 2001, tendered for filing an Amendment to Schedule 1 of the Participating Generator Agreement between the ISO and Sierra Power Corporation (Sierra Power) for acceptance by the Commission. The ISO states that this filing has been served on Sierra Power and the California Public Utilities Commission.

The ISO is requesting waiver of the 60-day notice requirement to allow the Participating Generator Agreement to be made effective June 13, 2001.

Comment date: July 11, 2001, in accordance with Standard Paragraph E at the end of this notice.

13. New England Power Company

[Docket No. ER01–2366–000]

Take notice that on June 20, 2001, New England Power Company (NEP) submitted for filing a Related Facilities Agreement (Agreement) between NEP and Sithe Fore River Development LLC (Sithe) for replacement and/or relocation of certain transmission facilities owned by NEP. The Agreement is designated as NEP's Rate Schedule FERC No. 510. Copies of the filing were served upon Sithe and the Department of Telecommunications and Energy of the Commonwealth of Massachusetts.

Comment date: July 11, 2001, in accordance with Standard Paragraph E at the end of this notice.

14. Reliant Energy Aurora, LP

[Docket No. ER01–2367–000]

Take notice that on June 21, 2001 Reliant Energy Aurora, LP (Reliant Aurora) tendered for filing a Master Power Purchase and Sale Agreement between Reliant Energy Services, Inc. (RES) as agent for Reliant Aurora and Alliant Energy Corporate Services, Inc. (Alliant) as agent for Wisconsin Electric

Power Company or IES Utilities, Inc or Interstate Power Company establishing WEPCO as a customer under Reliant Aurora's market-based tariff. Reliant Aurora its requests an effective date of June 1, 2001.

Reliant Aurora states that a copy of the filing was served on Alliant.

Comment date: July 12, 2001, in accordance with Standard Paragraph E at the end of this notice.

15. Reliant Energy Aurora, LP

[Docket No. ER01–2368–000]

Take notice that on June 21, 2001 Reliant Energy Aurora, LP (Reliant Aurora) tendered for filing a service agreement establishing Reliant Energy Services, Inc. (RES) as a customer under Reliant Aurora's market-based rate tariffs. Reliant Aurora requests an effective date of June 1, 2001 for the service agreement.

Comment date: July 12, 2001, in accordance with Standard Paragraph E at the end of this notice.

16. Wisconsin Public Service Corporation

[Docket No. ER01–2369–000]

Take notice that, on June 21, 2001, Wisconsin Public Service Corporation (WPSC) filed an unexecuted long-term service agreement with Duke Energy Lee, LLC (Duke) under WPSC's market-based rate tariff, FERC Electric Tariff, Third Revised Volume No. 10 (Tariff). A copy of the filing was served upon Duke.

WPSC requests that the Commission waive its notice of filing requirements to allow the service agreement to become effective on May 22, 2001.

Comment date: July 12, 2001, in accordance with Standard Paragraph E at the end of this notice.

17. Idaho Power Company

[Docket No. ER01–2372–000]

Take notice that on June 21, 2001, Idaho Power Company filed a Service Agreement for Firm Point-to-Point Transmission Service between Idaho Power Duke Energy Trading and Marketing, LLC, under its open access transmission tariff in the above-captioned proceeding.

Idaho Power requests the Commission accept this Service Agreement for filing and designate an effective date of June 11, 2001.

Comment date: July 12, 2001, in accordance with Standard Paragraph E at the end of this notice.

18. Idaho Power Company

[Docket No. ER01–2373–000]

Take notice that on June 21, 2001, Idaho Power Company filed a Service Agreement for Non-Firm Point-to-Point Transmission Service between Idaho Power Duke Energy Trading and Marketing, LLC, under its open access transmission tariff in the above-captioned proceeding.

Idaho Power requests the Commission accept this Service Agreement for filing and designate an effective date of June 11, 2001.

Comment date: July 12, 2001, in accordance with Standard Paragraph E at the end of this notice.

19. Puget Sound Energy, Inc.

[Docket No. ER01–2374–000]

Take notice that on June 21, 2001, Puget Sound Energy, Inc., as Transmission Provider, tendered for filing a service agreement for Firm Point-To-Point Transmission Service and a service agreement for Non-Firm Point-To-Point Transmission Service with Duke Energy Trading and Marketing, LLC (DETM), as Transmission Customer. A copy of the filing was served upon DETM.

Comment date: July 12, 2001, in accordance with Standard Paragraph E at the end of this notice.

20. Michigan Electric Transmission Company

[Docket No. ER01–2375–000]

Take notice that on June 21, 2001 Michigan Electric Transmission Company (Michigan Transco) tendered for filing an unexecuted Generator Interconnection and Operating Agreement Between Consumers and Covert Generating Company, LLC (Generator) (Agreement). Generator had requested that the unexecuted Agreement be filed. Consumers requested that the Agreement be allowed to become effective June 21, 2001.

Copies of the filing were served upon Generator and the Michigan Public Service Commission.

Comment date: July 12, 2001, in accordance with Standard Paragraph E at the end of this notice.

21. Tucson Electric Power Company

[Docket No. ER01–2384–000]

Take notice that on June 20, 2001, Tucson Electric Power Company (Tucson) filed proposed modifications to its Retail Competition Protocols (Attachment K of Tucson's open access transmission tariff), reflecting changes to the definitions of System Incremental Cost and Market Price. A copy of this filing has been served on all parties to the official service list.

Comment date: July 11, 2001, in accordance with Standard Paragraph E at the end of this notice.

Standard Paragraph

E. Any person desiring to be heard or to protest such filing should file a motion to intervene or protest with the Federal Energy Regulatory Commission, 888 First Street, N.E., Washington, D.C. 20426, in accordance with Rules 211 and 214 of the Commission's Rules of Practice and Procedure (18 CFR 385.211 and 385.214). All such motions or protests should be filed on or before the comment date. Protests will be considered by the Commission in determining the appropriate action to be taken, but will not serve to make protestants parties to the proceeding. Any person wishing to become a party must file a motion to intervene. Copies of these filings are on file with the Commission and are available for public inspection. This filing may also be viewed on the Internet at http://www.ferc.fed.us/ online/rims.htm (call 202–208–2222 for assistance). Comments, protests, and interventions may be filed electronically via the internet in lieu of paper. See, 18 CFR 385.2001(a)(1)(iii) and the instructions on the Commission's web site at http://www.ferc.fed.us/efi/doorbell.htm.

David P. Boergers,

Secretary.

[FR Doc. 01–16665 Filed 7–2–01; 8:45 am]

BILLING CODE 6717–01–P

DEPARTMENT OF ENERGY

Federal Energy Regulatory Commission

[Project No. 8864–016 Washington]

Calligan Hydro Inc., Notice of Availability of Draft Environmental Assessment

June 27, 2001.

In accordance with the National Environmental Policy Act of 1969 and the Federal Energy Regulatory Commission's (Commission) regulations, 18 CFR part 380 (Order No. 486, 52 FR 47897), the Office of Energy Projects has reviewed the application for amendment of the license for the Calligan Creek Hydroelectric Project, located on Calligan Creek in King County, Washington, and has prepared a Draft Environmental Assessment (DEA) for the project. No federal lands are affected by this project.

The DEA contains the staff's analysis of the potential environmental impacts of modifications to the project and concludes that amending the license for the project, with appropriate environmental protective measures, would not constitute a major federal

action that would significantly affect the quality of the human environment.

Copies of the DEA are available for review at the Commission's Public Reference Room, located at 888 First Street, NE., Washington, DC 20426, or by calling (202) 208–1371. The DEA may be viewed on the web at http//www.ferc.fed.us/online/rims.htm (call (202) 208–2222 for assistance).

Any comments should be filed within 30 days from the date of this notice and should be addressed to David P. Boergers, Secretary, Federal Energy Regulatory Commission, 888 First Street, NE., Washington, DC 20426. Please affix Project No. 8864–016 to all comments. Comments, protests and interventions may be filed electronically via the internet in lieu of paper. See 18 CFR 385.2001(a)(1)(iii) and the instructions on the Commission's web site at *http://www.ferc.fed.us/efi/doorbell.htm.*

For further information, contact Kenneth Hogan at (202) 208–0434.

Linwood A. Watson, Jr.,

Acting Secretary.

[FR Doc. 01–16642 Filed 7–2–01; 8:45 am]

BILLING CODE 6717–01–M

DEPARTMENT OF ENERGY

Federal Energy Regulatory Commission

Notice of Settlement Agreement and Soliciting Comments

June 27, 2001.

a. *Type of Application:* Settlement Agreement on New License Application.

b. *Project No.:* 1927–008.

c. *Date filed:* June 21, 2001.

d. *Applicant:* PacifiCorp.

e. *Name of Project:* North Umpqua Hydroelectric Project.

f. *Location:* On the North Umpqua River, in Douglas County, Oregon. The project occupies about 2, 725 acres of land within the Umpqua National Forest, and about 117 acres of land administered by the Bureau of Land Management.

g. *Filed Pursuant to:* Rule 602 of the Commission's Rules of Practice and Procedure, 18 CFR 385.602.

h. *Applicant Contact:* Timothy C. O'Connor, Director, Hydro Operations, PacifiCorp 825 Multnomah, Suite 1500, Portland, OR 97232, (503) 813–6660, and James M. Lynch, Stoel Rives LLP, 600 University Street, Suite 3600, Seattle, WA 98101–3197, (206) 624–0900.

i. *FERC Contact:* John Smith, 202–219–2460, john.smith@ferc.fed.us.

j. *Deadline for filing comments:* July 27, 2001. Reply comments due August 11, 2001.

All documents (original and eight copies) should be filed with: David P. Boergers, Secretary, Federal Energy Regulatory Commission, 888 First Street, NE, Washington, DC 20426. Comments, protests and interventions may be filed electronically via the internet in lieu of paper. See, 18 CFR 385.2001(a)(1)(iii) and the instructions on the Commission's web site at http://www.ferc.fed.us/efi/doorbell.htm.

The Commission's Rules of Practice require all intervenors filing documents with the Commission to serve a copy of that document on each person on the official service list for the project. Further, if an intervenor files comments or documents with the Commission relating to the merits of an issue that may affect the responsibilities of a particular resource agency, they must also serve a copy of the document on that resource agency.

k. *Description of Filing:* PacifiCorp filed the Settlement Agreement on behalf of itself and the U.S. Department of Agriculture's Forest Service, U.S. Department of Commerce's National Maritime Fisheries Service, U.S. Department of the Interior's Fish and Wildlife Service and Bureau of Land Management, Oregon Department of Environmental Quality, Oregon Department of Fish and Wildlife, and Oregon Water Resources Department. The purpose of the Settlement Agreement is to resolve among the signatories all issues regarding relicensing of the North Umpqua Hydroelectric Project (FERC Project No. 1927). The signatories request that the Commission accept and incorporate, without material modification, as license articles in the new license all of the Governmental Parties' Final Terms and Conditions filed with the Commission in connection with this agreement. Comments and reply comments on the Settlement Agreement are due on the dates listed above.

l. Copies of the Settlement Agreement are available for inspection and reproduction at the Commission's Public Reference Room, located at 888 First Street, NE, Room 2–A, Washington, DC 20426, or by calling (202) 208–1371. This filing may be viewed on http://www.ferc.fed.us/online/rims.htm (call (202) 208–2222 for assistance). Copies are also available for inspection and reproduction at the address in item h above.

Linwood A. Watson, Jr.,

Acting Secretary.

[FR Doc. 01–16641 Filed 7–2–01; 8:45 am]

BILLING CODE 6717–01–M

ENVIRONMENTAL PROTECTION AGENCY

[FRL–7006–3]

Agency Information Collection Activities: Continuing Collection; Comment Request; Regulation of Fuels and Fuel Additives; Gasoline Volatility; Reporting Requirements for Refiners, Blenders, Importers, and Transferors of Gasoline Containing Ethanol, and Reporting Requirements for Parties Seeking a Testing Exemption

AGENCY: Environmental Protection Agency (EPA).

ACTION: Notice.

SUMMARY: In compliance with the Paperwork Reduction Act (44 U.S.C. 3501 *et seq.*), this document announces that EPA is planning to submit the following continuing Information Collection Request (ICR) to the Office of Management and Budget (OMB): Regulation of Fuels and Fuel Additives; Gasoline Volatility; Reporting Requirements for Refiners, Blenders, Importers, and Transferors of Gasoline Containing Ethanol, and Reporting Requirements for Parties Seeking a Testing Exemption (40 CFR 80.27), (EPA ICR Number 1367.06, OMB Control Number 2060–0178, expiration date: 12–31–01). Before submitting the ICR to OMB for review and approval, EPA is soliciting comments on specific aspects of the proposed information collection as described below.

DATES: Comments must be submitted on or before September 4, 2001.

ADDRESSES: Transportation and Regional Programs Division, Office of Transportation and Air Quality, Office of Air and Radiation, Mail Code 6406J, U.S. Environmental Protection Agency, 1200 Pennsylvania Avenue, NW., Washington, DC 20460–0001. A paper or electronic copy of the draft ICR may be obtained without charge by contacting the person listed below.

FOR FURTHER INFORMATION CONTACT: James W. Caldwell, (202) 564–9303, fax: (202) 565–2085, caldwell.jim@epa.gov.

SUPPLEMENTARY INFORMATION:

Affected entities: Entities potentially affected by this action are those which produce, import, or transfer gasoline

containing ethanol, or who wish to obtain a testing exemption.

Title: Regulation of Fuels and Fuel Additives; Gasoline Volatility; Reporting Requirements for Refiners, Blenders, Importers, and Transferors of Gasoline Containing Ethanol, and Reporting Requirements for Parties Seeking a Testing Exemption (40 CFR 80.27), EPA ICR Number 1367.06, OMB Control Number 2060–0178, expiring 12–31–01.

Abstract: Gasoline volatility, as measured by Reid Vapor Pressure (RVP) in pounds per square inch (psi), is controlled in the spring and summer in order to minimize evaporative hydrocarbon emissions from motor vehicles. RVP ranges generally from about 7 psi to 9 psi, depending on location. The addition of ethanol to gasoline increases the RVP by about 1 psi. Gasoline that contains at least 9 volume percent ethanol is subject to a standard that is 1 psi greater. As an aid to industry compliance and EPA enforcement, the product transfer document which accompanies a shipment of gasoline containing ethanol is required by regulation to contain a legible and conspicuous statement that the gasoline contains ethanol and the percentage concentration of ethanol. This is intended to deter the mixing within the distribution system, particularly in retail storage tanks, of gasoline which contains ethanol with gasoline which does not contain ethanol. Such mixing would likely result in a gasoline with an ethanol concentration of less than 9 volume percent but with an RVP above the standard. Parties wishing a testing exemption must submit certain information to EPA. An agency may not conduct or sponsor, and a person is not required to respond to, a collection of information unless it displays a currently valid OMB control number. The OMB control numbers for EPA's regulations are listed in 40 CFR part 9 and 48 CFR chapter 15.

The EPA would like to solicit comments to:

(i) Evaluate whether the proposed collection of information is necessary for the proper performance of the functions of the agency, including whether the information will have practical utility;

(ii) Evaluate the accuracy of the agency's estimate of the burden of the proposed collection of information, including the validity of the methodology and assumptions used;

(iii) Enhance the quality, utility, and clarity of the information to be collected; and

(iv) Minimize the burden of the collection of information on those who are to respond, including through the use of appropriate automated electronic, mechanical, or other technological collection techniques or other forms of information technology, e.g., permitting electronic submission of responses.

Burden Statement: EPA estimates that there at 3,000,000 shipments annually of gasoline containing ethanol. Thus the required statement must be placed on 3,000,000 product transfer documents annually. Such documents are a customary business practice, so the burden is limited to the placement of the statement, which is generally computer-generated or hand-stamped. EPA estimates an average burden of 5 seconds per document, for a total annual burden for 3,000,000 documents of 4,170 hours. At an estimated industry labor cost of $60 per hour, EPA estimates the labor cost burden at $250,200 for about 1,000 parties which produce or import gasoline containing ethanol. Thus the cost per party is about $250 annually. There are no start-up costs, as they were incurred some years ago at the start of the program. There are no annualized capital costs and no operation and maintenance costs because the product transfer documents are in use for other reasons and there are no recordkeeping requirements. There are no purchase-of-services costs. There is no burden for transferors of gasoline containing ethanol because the product transfer document that accompanies each shipment is already handled as a customary business practice. It is estimated that EPA will receive 2 requests annually for testing exemptions, at 4 hours burden and $240 labor cost per request. An operating and maintenance cost for postage and copying of $10 per request is estimated. Burden means the total time, effort, or financial resources expended by persons to generate, maintain, retain, or disclose or provide information to or for a Federal agency. This includes the time needed to review instructions; develop, acquire, install, and utilize technology and systems for the purposes of collecting, validating, and verifying information, processing and maintaining information, and disclosing and providing information; adjust the existing ways to comply with any previously applicable instructions and requirements; train personnel to be able to respond to a collection of information; search data sources; complete and review the collection of information; and transmit or otherwise disclose the information.

Dated: June 22, 2001.

Michael G. Shields,

Acting Director, Transportation and Regional Programs Division.

[FR Doc. 01–16688 Filed 7–2–01; 8:45 am]

BILLING CODE 6560–50–P

ENVIRONMENTAL PROTECTION AGENCY

[FRL–7006–5]

Program To Build Local Capacity To Conduct Assessments of the Impacts of Climate Change and Variability on Aquatic Ecosystems and Water Quality

AGENCY: Environmental Protection Agency (EPA).

ACTION: Notice of availability of funds and request for applications for cooperative agreements.

SUMMARY: The Environmental Protection Agency (EPA), Office of Research and Development, National Center for Environmental Assessment, Global Change Research Program is issuing a Request for Applications (RFA) for Cooperative Agreements to Provide Assistance to State/Tribal/Other Local Environmental Protection Agencies to Conduct Location-Specific Assessments of the Impacts of Climate Change and Variability on Aquatic Ecosystems and Water Quality. (For the purposes of this solicitation, ''local'' describes any entity that operates at a smaller spatial scale than the regional or national scale. Examples include states, tribes, U.S. territories, counties, municipalities, and watersheds.) In addition, universities and non-profit organizations may apply for assistance under this program if they will use EPA funds to provide support to state/tribal/other local government environmental protection agencies.

Specifically, funding recipients will assess the potential effects of climate change and variability on water quality (with respect to drinking water, wastewater treatment, surface water, and/or ground water) and/or the effects on aquatic ecosystems (streams, rivers, lakes, wetlands, estuaries, and/or coral reefs). The purpose of these cooperative agreements is to build local capacity by providing physical resources (through cooperative agreement funding) and technical assistance necessary to conduct pilot assessment projects. These pilot projects will help groups that receive funds to develop the capacity to conduct additional assessments on their own, and will generate model methodologies and approaches that can be applied by other local authorities. Applicants are encouraged to develop cooperative

relationships with other organizations, educational institutions, citizens groups, water quality authorities (e.g., water suppliers, treatment plants) and/or other non-federal governmental entities to achieve these purposes. Any transactions with such groups involving transfer of EPA funds must comply with applicable regulations. Awards are estimated to range from $25,000 to $100,000 total over a one- to three-year period. Depending on funding availability, up to approximately $300,000 will be available to fund approximately three to six awards.

DATES: Applications must be postmarked, dated by a delivery service, or marked received by NCEA/Global personnel by October 18, 2001.

ADDRESSES: Solicitation packages are available on NCEA's web site (http://www.epa.gov/ncea/) and on the Global Change Research Program's web site (http://www.epa.gov/globalresearch/). A list of resources that may be useful to applicants is also posted on the Global Change Research Program web site. Information about the full application process and application forms are found in the ''Application Kit for Assistance.'' Paper copies may be requested from the EPA contact person at the address and phone number below.

FOR FURTHER INFORMATION CONTACT: David Kelley, preferably by email: kelley.dave@epa.gov; also by mail: National Center for Environmental Assessment (8623D); Office of Research and Development, U.S. Environmental Protection Agency, 1200 Pennsylvania Avenue, N.W., Washington, DC 20460; physical location and overnight delivery: 808 17th Street, NW., 5th floor, Washington, DC 20006; telephone: 202–564–3263; or facsimile: 202–564–2268.

Dated: June 21, 2001.

Arthur F. Payne,

Acting Director, National Center for Environmental Assessment.

[FR Doc. 01–16686 Filed 7–2–01; 8:45 am]

BILLING CODE 6560–50–P

ENVIRONMENTAL PROTECTION AGENCY

[FRL–7006–2]

Public Water System Supervision Program Revision for the State of Texas

AGENCY: Environmental Protection Agency (EPA).

ACTION: Notice of tentative approval.

SUMMARY: Notice is hereby given that the State of Texas is revising its approved Public Water System Supervision Program. Texas has adopted an Interim Enhanced Surface Water Treatment Rule to improve control of microbial pathogens in drinking water, including specifically the protozoan Cryptosporidium, and a Stage 1 Disinfectant/Disinfection Byproducts Rule, setting new requirements to limit the formation of chemical disinfectant byproducts in drinking water. Texas has also adopted drinking water regulations requiring consumer confidence reports from all community water systems, has adopted a revised definition for public water system, and has revised Texas administrative penalty authority. EPA has determined that these revisions are no less stringent than the corresponding federal regulations. Therefore, EPA intends to approve these program revisions.

All interested parties may request a public hearing. A request for a public hearing must be submitted by August 2, 2001 to the Regional Administrator at the EPA Region 6 address shown below. Frivolous or insubstantial requests for a hearing may be denied by the Regional Administrator. However, if a substantial request for a public hearing is made by August 2, 2001, a public hearing will be held. If no timely and appropriate request for a hearing is received and the Regional Administrator does not elect to hold a hearing on his own motion, this determination shall become final and effective on August 2, 2001. Any request for a public hearing shall include the following information: The name, address, and telephone number of the individual organization, or other entity requesting a hearing; a brief statement of the requesting person's interest in the Regional Administrator's determination and a brief statement of the information that the requesting person intends to submit at such hearing; and the signature of the individual making the request, or, if the request is made on behalf of an organization or other entity, the signature of a responsible official of the organization or other entity.

ADDRESSES: All documents relating to this determination are available for inspection between the hours of 8:00 a.m. and 4:30 p.m., Monday through Friday, at the following offices: Texas Natural Resource Conservation Commission, Water Permits and Resource Management Division, Public Drinking Water Section (MC–155), Building F, 12100 Park 35 Circle, Austin, TX 78753; and United States Environmental Protection Agency, Region 6, Drinking Water Section (6WQ–SD), 1445 Ross Avenue, Suite 1200, Dallas, Texas 75202.

FOR FURTHER INFORMATION CONTACT: Tom Poeton, EPA Region 6, Drinking Water Section at the Dallas address given above or at telephone (214) 665–2757.

Authority: (Section 1420 of the Safe Drinking Water Act, as amended (1996), and 40 CFR part 142 of the National Primary Drinking Water Regulations)

Dated: June 25, 2001.

Sam Becker,

Acting Regional Administrator, Region 6.

[FR Doc. 01–16687 Filed 7–2–01; 8:45 am]

BILLING CODE 6560–50–P

FEDERAL COMMUNICATIONS COMMISSION

[CC Docket No. 99–216; DA 01–1485]

The Commission Will No Longer Accept Applications for Certification and Petitions for Waiver of Technical Criteria

AGENCY: Federal Communications Commission.

ACTION: Notice.

SUMMARY: On June 22, 2001, the Commission released a public notice announcing that after July 23, 2001, the Commission will no longer accept applications for certification of terminal equipment and petitions for waiver of technical criteria. The intended effect of this action is to make the public aware of the changes to the rules.

FOR FURTHER INFORMATION CONTACT: Bill Howden at (202) 418–2343, *whowden@fee.gov* or Susan Magnotti, at (202) 418–0871, *smagnotti@fee.gov.* The address is: Network Services Division, Common Carrier Bureau, Federal Communications Commission, The Portals, 445 12th Street, SW, Suite 6A207, Washington, DC 20554. The fax number is: (202) 418–2345. The TTY number is: (202) 418–0484.

SUPPLEMENTARY INFORMATION: Pursuant to *In the Matter of 2000 Biennial Regulatory Review of Part 68 of the Commission's Rules and Regulations,* CC Docket 99–216, *Report and Order,* FCC 00–400, 66 FR 7579 (January 24, 2001) (*Order*), the Commission will no longer accept applications for certification of terminal equipment under 47 CFR part 68 as of July 23, 2001. Also, petitions for waiver of the part 68 rules that were eliminated in the *Order,* including those pertaining to the Commission's streamlined waiver process for stutter dial tone (section 68.312(i)) and ADSL/RADSL terminal equipment (section 68.308(e)(1)), should

no longer be filed with the Commission after July 23, 2001. As of July 23, 2001, parties seeking to request exceptions or interim criteria for their terminal equipment that does not meet the published technical criteria should contact the Administrative Council for Terminal Attachments (ACTA). The Commission's rules pertaining to hearing aid compatibility and volume control are not affected by this action.

The ACTA, established by the Commission in the *Order*, is responsible for establishing and maintaining a database of equipment found to be compliant with industry-established technical criteria, establishing numbering and labeling requirements, and establishing filing requirements for certification.

The *Order* requires certification of terminal equipment by one of two methods. The first method, which is currently available to applicants, is certification by a Telecommunication Certification Body (TCB). Once ACTA establishes filing requirements for TCBs and so notifies them, TCBs must send their certificates to ACTA's designated receiver. Until that time, TCBs may continue to send their certificates to the Commission.

Once ACTA establishes the supporting database, numbering and labeling requirements, and data filing requirements, the second method, self-declaration of conformity (SDoC) certification, will be available to terminal equipment suppliers. At that time, suppliers declaring conformity may send required data to ACTA's designated receiver. Parties seeking information on the SDoC certification method may contact Tim Jeffries, (202) 662–8669, email: *tjeffries@atis.org.*

Federal Communications Commission.

Diane Griffin Harmon,

Deputy Chief, Network Services Division, Common Carrier Bureau.

[FR Doc. 01–16652 Filed 7–2–01; 8:45 am]

BILLING CODE 6712–01–P

FEDERAL MARITIME COMMISSION

Sunshine Act Meeting

AGENCY HOLDING THE MEETING: Federal Maritime Commission.

TIME AND DATE: 10 a.m.—August 15, 2001.

PLACE: 800 North Capitol Street, NW., First Floor Hearing Room, Washington, DC.

STATUS: A portion of the meeting will be open to the public, and the remainder of the meeting will be closed.

MATTERS TO BE CONSIDERED: The Open Portion of the Meeting:

1. Ocean Shipping Reform Act Impact Study; Docket No. 01–01—The Impact of the Ocean Shipping Reform Act of 1998.

The Closed Portion of the Meeting:

1. Docket No. 98–14—Shipping Restrictions, Requirements and Practices of the Peoples Republic of China.

2. Petition No. P3–00—Petition of China Ocean Shipping (Group) Company for a Partial Exemption from the Controlled Carrier Act.

3. Petition No. P2–00—Petition of China National Foreign Trade Transportation (Group) Corp. (SINOTRANS) for Exemption from Section 9(c) of the Shipping Act of 1984.

4. Issues Arising Under the Shipping Act of 1984 Relating to Controlled Carriers of the People's Republic of China.

5. Docket No. 99–18— Stallion Cargo, Inc.—Possible Violations of Sections 10(a)(1) and 10(b)(1) of the Shipping Act of 1984.

CONTACT PERSON FOR MORE INFORMATION: Bryant L. VanBrakle, Secretary, (202) 523–5725.

Bryant L. VanBrakle,

Secretary.

[FR Doc. 01–16803 Filed 6–29–01; 2:42 pm]

BILLING CODE 6730–01–M

FEDERAL RESERVE SYSTEM

Formations of, Acquisitions by, and Mergers of Bank Holding Companies

The companies listed in this notice have applied to the Board for approval, pursuant to the Bank Holding Company Act of 1956 (12 U.S.C. 1841 et seq. (BHC Act), Regulation Y (12 CFR Part 225), and all other applicable statutes and regulations to become a bank holding company and/or to acquire the assets or the ownership of, control of, or the power to vote shares of a bank or bank holding company and all of the banks and nonbanking companies owned by the bank holding company, including the companies listed below.

The applications listed below, as well as other related filings required by the Board, are available for immediate inspection at the Federal Reserve Bank indicated. The application also will be available for inspection at the offices of the Board of Governors. Interested persons may express their views in writing on the standards enumerated in the BHC Act (12 U.S.C. 1842(c)). If the proposal also involves the acquisition of a nonbanking company, the review also includes whether the acquisition of the nonbanking company complies with the standards in section 4 of the BHC Act (12 U.S.C. 1843). Unless otherwise noted, nonbanking activities will be conducted throughout the United States. Additional information on all bank holding companies may be obtained from the National Information Center website at www.ffiec.gov/nic/.

Unless otherwise noted, comments regarding each of these applications must be received at the Reserve Bank indicated or the offices of the Board of Governors not later than July 27, 2001.

A. Federal Reserve Bank of Richmond (A. Linwood Gill, III, Vice President) 701 East Byrd Street, Richmond, Virginia 23261–4528:

1. Maryland Bankcorp, Inc., Lexington Park, Maryland; to become a bank holding company by acquiring 100 percent of the voting shares of Maryland Bank & Trust Company, N.A., Lexington Park, Maryland.

B. Federal Reserve Bank of Dallas (W. Arthur Tribble, Vice President) 2200 North Pearl Street, Dallas, Texas 75201–2272:

1. JSA Family Limited Partnership, Frankston, Texas; to become a bank holding company by acquiring 16 percent of the voting shares of Austin Bancorp, Inc., Jacksonville, Texas, and thereby indirectly acquire TEB, Inc., Shreveport, Louisiana, and Austin Bank, Texas; National Association, Jacksonville, Texas; 12.10 percent of the voting shares of Capital Bancorp, Inc., Jacinto City, Texas; and thereby indirectly acquire voting shares of JACI, Inc., Wilmington, Delaware, and Capital Bank, Jacinto City, Texas; 7.73 percent of the voting shares of Frankston Bancorp, Inc., Frankston, Texas, and thereby indirectly acquire voting shares of FDB. Inc., Dover, Delaware, and First State Bank, Frankston, Texas; and 4.31 percent of the voting shares of First State Bank, Athens, Texas.

Board of Governors of the Federal Reserve System, June 27, 2001.

Robert deV. Frierson,

Associate Secretary of the Board.

[FR Doc. 01–16624 Filed 7–2–01; 8:45 am]

BILLING CODE 6210–01–P

FEDERAL RESERVE SYSTEM

Sunshine Act Meeting

AGENCY HOLDING THE MEETING: Board of Governors of the Federal Reserve System

TIME AND DATE: 11 a.m., Monday, July 9, 2001.

PLACE: Marriner S. Eccles Federal Reserve Board Building, 20th and C Streets, NW., Washington, DC 20551.

STATUS: Closed.

MATTERS TO BE CONSIDERED:

1. Personnel actions (appointments, promotions, assignments, reassignments, and salary actions) involving individual Federal Reserve System employees.

2. Any items carried forward from a previously announced meeting.

CONTACT PERSON FOR MORE INFORMATION: Michelle A. Smith, Assistant to the Board; 202–452–3204.

SUPPLEMENTARY INFORMATION: You may call 202–452–3206 beginning at approximately 5 p.m. two business days before the meeting for a recorded announcement of bank and bank holding company applications scheduled for the meeting; or you may contact the Board's Web site at http://www.federalreserve.gov for an electronic announcement that not only lists applications, but also indicates procedural and other information about the meeting.

Dated: June 29, 2001.

Robert deV. Frierson,

Associate Secretary of the Board.

[FR Doc. 01–16802 Filed 6–29–01; 2:42 pm]

BILLING CODE 6210–01–P

FEDERAL RETIREMENT THRIFT INVESTMENT BOARD

Sunshine Act Meeting

TIME AND DATE: 10 a.m. (EDT); July 9, 2001.

PLACE: 4th Floor, Conference Room 4506, 1250 H Street, NW., Washington, DC.

STATUS: Open.

MATTERS TO BE CONSIDERED:

1. Approval of the minutes of the June 11, 2001, Board member meeting.

2. Thrift Savings Plan activity report by the Executive Director.

CONTACT PERSON FOR MORE INFORMATION: Thomas J. Trabucco, Director, Office of External Affairs, (202) 942–1640.

Dated: June 28, 2001.

Elizabeth S. Woodruff,

Secretary to the Board, Federal Retirement Thrift Investment Board.

[FR Doc. 01–16776 Filed 6–29–01; 10:59 am]

BILLING CODE 6760–01–M

OFFICE OF GOVERNMENT ETHICS

Proposed Collection; Comment Request: Proposed Updated Qualified Trust Model Certificates and Model Trust Documents

AGENCY: Office of Government Ethics (OGE).

ACTION: Notice.

SUMMARY: This notice informs the public and executive branch agencies that, after this first round notice and comment period, OGE plans to submit updated executive branch qualified trust model certificates and model trust documents to the Office of Management and Budget (OMB) for review and three-year extension of approval under the Paperwork Reduction Act. In all, a total of twelve OGE model certificates and model documents for qualified trusts are involved. The notice also identifies a minor revision proposed to these documents.

DATES: Comments by the public and agencies on this information collection as proposed for revision and extension are invited and should be received by September 17, 2001.

ADDRESSES: Any comments should be sent to: James V. Parle, Chief, Office of Information Resources Management, Office of Government Ethics, Suite 500, 1201 New York Avenue, NW., Washington, DC 20005–3917. Comments may also be sent electronically to OGE's Internet E-mail address at usoge@oge.gov (for E-mail messages, the subject line should include the following reference—''Qualified trust model certificates and model trust documents paperwork comment'').

FOR FURTHER INFORMATION CONTACT: Mr. Parle at the Office of Government Ethics; telephone: 202–208–8000, ext. 1113; TDD: 202–208–8025; FAX: 202–208–8037. A copy of all of the updated model trust documents and certificates may be obtained, without charge, by contacting Mr. Parle.

SUPPLEMENTARY INFORMATION: The Office of Government Ethics is the supervising ethics office for the executive branch of the Federal Government under the Ethics in Government Act of 1978 (Ethics Act). Presidential nominees to executive branch positions subject to Senate confirmation and any other executive branch officials may seek OGE approval for Ethics Act qualified blind or diversified trusts to be used to avoid conflicts of interest.

The Office of Government Ethics is the sponsoring agency for the model certificates and model trust documents for qualified blind and diversified trusts of executive branch officials set up under section 102(f) of the Ethics Act, 5 U.S.C. app. § 102(f), and OGE's implementing financial disclosure regulations at subpart D of 5 CFR part 2634. The various model certificates and model trust documents are utilized by OGE and settlors, trustees and other fiduciaries in establishing and administering these qualified trusts.

This notice describes a minor proposed change to the qualified trust model documents. The proposed updating change is a minor improvement that will enhance privacy with respect to trust instruments once executed. The Office of Government Ethics proposes to substitute the words ''mailing address'' for the words ''home address'' where they appear within the model trust documents. No change is needed for the model certificates of independence and compliance as codified at appendices A–C to 5 CFR part 2634.

The Office of Government Ethics is planning to submit, after this first round notice and comment period, updated versions of all twelve qualified trust certificates and model documents described below (all of which are included under OMB paperwork control number 3209–0007) for a three-year extension of approval by OMB under the Paperwork Reduction Act (44 U.S.C. chapter 35). At that time, OGE will publish a second paperwork notice in the **Federal Register** to inform the public and the agencies. The current paperwork approval for the model certificates and model trust documents is scheduled to expire at the end of October 2001.

There are two categories of information collection requirements which OGE plans to submit, each with its own related reporting model certificates or model trust documents which are subject to paperwork review and approval by OMB. The OGE regulatory citations for these two categories, together with identification of the forms used for their implementation, are as follows:

i. Qualified trust certifications—5 CFR 2634.401(d)(2), 2634.403(b)(11), 2634.404(c)(11), 2634.406(a)(3) & (b), 2634.408, 2634.409 and appendices A & B to part 2634 (the two implementing forms, the Certificate of Independence and Certificate of Compliance, are codified respectively in the cited appendices; see also the Privacy Act and Paperwork Reduction Act notices thereto in appendix C); and

ii. Qualified trust communications and model provisions and agreements—5 CFR 2634.401(c)(1)(i) & (d)(2),

2634.403(b), 2634.404(c), 2634.408 and 2634.409 (the nine implementing forms are the: (A) Blind Trust Communications (Expedited Procedure for Securing Approval of Proposed Communications); (B) Model Qualified Blind Trust Provisions; (C) Model Qualified Diversified Trust Provisions; (D) Model Qualified Blind Trust Provisions (For Use in the Case of Multiple Fiduciaries); (E) Model Qualified Blind Trust Provisions (For Use in the Case of an Irrevocable Pre-Existing Trust); (F) Model Qualified Diversified Trust Provisions (Hybrid Version); (G) Model Qualified Diversified Trust Provisions (For Use in the Case of Multiple Fiduciaries); (H) Model Qualified Diversified Trust Provisions (For Use in the Case of an Irrevocable Pre-Existing Trust); (I) Model Confidentiality Agreement Provisions (For Use in the Case of a Privately Owned Business); and (J) Model Confidentiality Agreement Provisions (For Use in the Case of Investment Management Activities)).

The various model trust certificates and model trust documents as proposed to be modified are available without charge to the public upon request as indicated in the ''For Further Information Contact'' section above.

The communications formats and the confidentiality agreements (items ii (A), (I) and (J) above) would not be available to the public because they contain sensitive, confidential information. All the other completed model trust certificates and model trust documents (except for any trust provisions that relate to the testamentary disposition of trust assets) are publicly available based upon a proper Ethics Act request (by filling out an OGE Form 201 access form).

The total annual public reporting burden represents the time involved for completing qualified trust certificates and model trust documents which are processed by OGE. The burden is based on the amount of time imposed on private citizens. Virtually all filers/document users are private trust administrators and other private representatives who help to set up and maintain the qualified blind and diversified trusts. The detailed paperwork estimates below for the various trust certificates and model trust documents, which remain the same as for the last paperwork clearance three years ago, are based primarily on OGE's experience with administration of the qualified trust program.

i. Trust Certificates:

A. Certificate of Independence: Total filers (executive branch): 10; Private citizen filers (100%): 10; OGE-processed certificates (private citizens): 10; OGE burden hours (20 minutes/certificate): 3.

B. Certificate of Compliance: Total filers (executive branch): 35; Private citizen filers (100%): 35; OGE-processed certificates (private citizens): 35; OGE burden hours (20 minutes/certificate): 12; and

ii. Model Qualified Trust Documents:

A. Blind Trust Communications: Total Users (executive branch): 35; Private citizen users (100%): 35; OGE-processed documents (private citizens): 210 (based on an average of six communications per user, per year); OGE burden hours (20 minutes/communication): 70.

B. Model Qualified Blind Trust: Total Users (executive branch): 10; Private citizen users (100%): 10; OGE-processed models (private citizens): 10; OGE burden hours (100 hours/model): 1,000.

C. Model Qualified Diversified Trust: Total users (executive branch): 15; Private citizen users (100%): 15; OGE-processed models (private citizens): 15; OGE burden hours (100 hours/model): 1,500.

D.–H. Each of the five remaining model qualified trust documents: Total users (executive branch): 2; Private citizen users (100%): 2; OGE-processed models (private citizens): 2, multiplied by 5 (five different models) = 10; OGE burden hours (100 hours/model): 200, multiplied by 5 (five different models) = 1,000.

I.–J. Each of the two model confidentiality agreements: Total users (executive branch): 2; Private citizens users (100%): 2; OGE-processed agreements (private citizens): 2, multiplied by 2 (two different models) = 4; OGE burden hours (50 hours/agreement): 100, multiplied by 2 (two different models) = 200.

Based on these estimates, the total number of forms expected annually at OGE is 294 with a cumulative total of 3,785 burden hours.

Public comment is invited on each aspect of the model qualified trust certificates and model trust documents, and underlying regulatory provisions, as set forth in this notice, including specifically views on the need for and practical utility of this set of collections of information, the accuracy of OGE's burden estimate, the potential for enhancement of quality, utility and clarity of the information collected, and the minimization of burden (including the use of information technology).

Comments received in response to this notice will be summarized for, and may be included with, the OGE request for extension of the OMB paperwork approval for the set of the various existing qualified trust model certificates, the model communications package, and the model trust documents as updated. The comments will also become a matter of public record.

Approved: June 25, 2001.

Amy L. Comstock,

Director, Office of Government Ethics.

[FR Doc. 01–16619 Filed 7–2–01; 8:45 am]

BILLING CODE 6345–01–P

DEPARTMENT OF HEALTH AND HUMAN SERVICES

Office of the Assistant Secretary for Planning and Evaluation; Notice of a Cooperative Agreement With the Manpower Demonstration Research Corporation

AGENCY: Office of the Assistant Secretary for Planning and Evaluation (ASPE).

The Office of the Assistant Secretary for Planning and Evaluation's (ASPE) Office of Human Services Policy announces its intention to award a non-competitive continuation to a cooperative agreement with the Manpower Demonstration Research Corporation (MDRC) in support of the Project on Devolution and Urban Change.

The purpose of this cooperative agreement is to support research to understand the impacts of welfare reform and welfare to work programs on low-income individuals, families, and the communities in which they live, with an emphasis on urban areas.

ASPE will have substantial involvement in all stages of the project, including: identifying potential questions that could be answered using the data; prioritizing among them based on the available resources; determining appropriate methods of data analysis; reviewing draft papers and reports; and assisting in their dissemination.

The goal of ASPE in entering into this cooperative agreement is to improve our understanding of the impact of the Personal Responsibility and Work Opportunity Reconciliation Act of 1996 in high-poverty urban areas.

Authorizing Legislation

This cooperative agreement is authorized under Section 1110 of the Social Security Act (42 U.S.C. 1310) and the Agriculture, Rural Development, Food and Drug Administration, and Related Agencies Appropriations Act of 2001 (P.L. 106–387).

Background

Assistance will be provided to MDRC. No other applications are solicited. ASPE is committed to supporting high-quality research in the area of welfare

policy, and has a particular interest in understanding the effects of welfare reform in urban areas. Most welfare reform studies to date have not been in large cities, and thus have not addressed the challenges posed by high levels of unemployment and by concentrated poverty. These questions are critical because caseloads have not declined as much in cities as in other parts of the country, and also because the lessons from urban areas may be applicable elsewhere in the case of an economic downturn.

ASPE believes that MDRC is uniquely qualified to work with ASPE to meet this goal for the following reasons:

1. The Project on Devolution and Urban Change presents a unique opportunity to learn about the implementation and impacts of welfare reform in four large urban areas—Cleveland, Philadelphia, Los Angeles, and Miami. MDRC has an ongoing working relationship with key officials in each city and has already obtained commitments from the state and local governments in these areas to provide extensive longitudinal administrative data for research purposes.

2. This project brings together data from an unusually wide array of sources: longitudinal administrative data for all families receiving AFDC/TANF or Food Stamps dating back to 1992; survey data; an implementation study; neighborhood indicators; an institutional study focusing on local service providers; and an ethnographic study of a limited number of families. This will allow the researchers to capture effects that might be missed in one approach, and to improve our understanding of the strengths and weaknesses of each approach. It is unlikely that this breadth of sources could be replicated. MDRC has assembled a multi-disciplinary team of distinguished researchers to collect and analyze this data.

3. This project leverages a substantial commitment of private sector funding. Of the total $20.4 million cost of the Project on Devolution and Urban Change, over $16 million has already been committed by private funders, with an additional $1.7 million in pending proposals. This funding allows for a breadth of research far beyond what could be obtained through the federal support alone.

4. MDRC is one of the pre-eminent institutions in the area of welfare and welfare-to-work research, having conducted projects in over 400 communities in 40 states. MDRC has developed a reputation for objective, high-quality work. This project will involve several of MDRC's senior researchers, as well as consultants who are recognized as leaders in their areas of concentration.

Approximately $600,000 is available in FY 2001 for a one-year project period for this cooperative agreement. A portion of this support is provided by the Administration for Children and Families, DHHS, and the Economic Research Service, U.S. Department of Agriculture.

Where To Obtain Additional Information

If you are interested in obtaining additional information regarding this project, contact Ms. Elizabeth Lower-Basch, Office of Human Services Policy, ASPE, 200 Independence Ave. SW, Room 404E, Washington, DC, 20201 or telephone: 202 690–6808.

Dated: June 25, 2001.

William F. Raub,

Acting Assistant Secretary for Planning and Evaluation.

[FR Doc. 01–16622 Filed 7–2–01; 8:45 am]

BILLING CODE 4154–05–P

DEPARTMENT OF HEALTH AND HUMAN SERVICES

Office of the Assistant Secretary for Planning and Evaluation; Notice of an Extension of Cooperative Agreements for National Poverty Research Centers

The Office of the Assistant Secretary for Planning and Evaluation (OASPE) announces its intention to award a one year non-competitive extension of its poverty research center cooperative agreements. In FY 1996 the Office of the Assistant Secretary for Planning and Evaluation, Department of Health and Human Services (DHHS) awarded two five-year cooperative agreements to support national poverty research centers. The poverty center program provides basic and applied research into the causes, consequences and remedies of poverty as well as provide for the mentoring and training of poverty scholars, and a forum for dissemination of research and evaluation findings. The recipients of the cooperative agreements were the Joint Center for Poverty Research at Northwestern University/University of Chicago (JCPR) and the Institute for Research on Poverty at the University of Wisconsin (IRP). The current grant period expires in late FY 2001.

OASPE intends to extend the cooperative agreements for one-year at current funding levels: $1,500,000 to JCPR and $500,000 to IRP. The extension will allow sufficient time for OASPE to reexamine the purposes and goals of its poverty center program and provide ample time for a new full and open competition. This extension will allow the current national poverty research centers to continue to provide high quality basic and applied poverty research, mentoring and training activities, and dissemination of policy relevant findings as specified in the cooperative agreements.

Authorizing Legislation

These cooperative agreements are authorized under Section 1110 of the Social Security Act.

Nothing in this announcement commits OASPE to renewing or re-competing the poverty center program.

Comments and questions related to this extension will be accepted until July 18, 2001. Written comments should be directed to Donald T. Oellerich, OASPE Project Officer by e-mail at *doelleri@osaspe.dhhs.gov* or fax at 202–690–6562 or by mail at DHHS, OASPE, 200 Independence Av. SW., Room 404E, Washington, DC 20201.

Dated: June 25, 2001.

William F. Raub,

Acting Assistant Secretary for Planning and Evaluation.

[FR Doc. 01–16621 Filed 7–2–01; 8:45 am]

BILLING CODE 4154–05–P

DEPARTMENT OF HEALTH AND HUMAN SERVICES

Agency for Toxic Substances and Disease Registry

[Program Announcement 01103]

Alaska Traditional Diet Project; Notice of Availability of Funds

A. Purpose

The Agency for Toxic Substances and Disease Registry (ATSDR) announces the availability of fiscal year (FY) 2001 funds for a grant program for the Alaska Traditional Diet Project. This program addresses the ''Healthy People 2010'' focus areas for Environmental Health; Maternal, Infant, and Child Health; and Educational and Community-Based Programs.

Congress has directed ATSDR to identify and study contaminants in the environment, subsistence resources, and people in Alaska Native populations. The scope of the project covers all users of Alaska traditional foods, including subsistence, commercial and recreational, and does not focus solely on Alaska Native users.

The purpose of the program is to begin defining the dietary consumption patterns of rural Alaska subsistence diet

users. This dietary information will be used by Alaskans for public health data collection. The data collected will support other efforts by public health entities in Alaska to better define both the risk of exposures to environmental contaminants in the diet and the nutritional benefits of the foods. Due to the diversity of lifestyles, cultures, and foods harvested in different areas of Alaska, dietary consumption data collections must be completed in various regions of Alaska.

B. Eligible Applicants

Assistance will be provided only to the Alaska Native Health Board. No other applications are solicited. The fiscal year 2001 Federal appropriations specifically direct ATSDR to study contaminants in the environment, subsistence resources, and people in Alaska Native populations. The Alaska Native Health Board (ANHB) is uniquely qualified to coordinate activities as directed by the congressionally appropriated money to ATSDR since it's programs and functions are directed by the 22 Alaska Native regional health organizations that serve 108,000 Alaska Natives. ANHB's activities have evolved to provide statewide support through technical assistance, research, wellness, environmental and contaminant programs.

Note: Title 2 of the United States Code, Chapter 26, Section 1611 states that an organization described in section 501(c)(4) of the Internal Revenue Code of 1986 that engages in lobbying activities is not eligible to receive Federal funds constituting an award, grant, cooperative agreement, contract, loan, or any other form.

C. Availability of Funds

Approximately $350,000 is available in FY 2001 to fund one award. It is expected that the award will begin on or about September 30, 2001, and will be made for a 12-month budget period within a project period of one year. Funding estimates may change.

Use of Funds

Funds may be expended for reasonable program purposes, such as personnel, travel, supplies, and services. Funds for contractual services may be requested; however, the awardee, as the direct and primary recipient of ATSDR grant funds, must perform a substantive role in carrying out project activities and not merely serve as a conduit for an award to another party or provide funds to an ineligible party. Equipment may be purchased with grant funds. However, the equipment proposed should be appropriate and reasonable for the research activity to be conducted. Property may be acquired only when authorized in the grant. The awardee, as part of the application process, should provide a justification of need to acquire property, the description, and the cost of purchase versus lease. At the completion of the project, the equipment will be returned to ATSDR.

D. Program Requirements

The purpose of the program is to define the dietary consumption patterns of rural Alaska subsistence diet users. Data from this grant will be utilized by the public health agencies and organizations in Alaska, and the Alaska Native health corporations, as they develop a coordinated response to contaminant issues in traditional food supplies.

In conducting activities to achieve the purpose and objectives of this program, the recipient will be responsible for the following activities:

1. Identify an appropriate Alaska-specific dietary survey. The survey (or surveys) should contain a core section that is applicable to all Alaska regions and provide for the collection of regional-specific information as appropriate.
2. Establish an ad hoc oversight group to provide advice on the identification of regions to be surveyed and to advise on other technical aspects on the conduct of the survey.
3. Conduct training for the staff selected to conduct the survey and for staff compiling the data.
4. Provide education and consultation with the communities selected regarding the program throughout the various stages of the survey implementation.
5. Identify regions in Alaska to be surveyed; and complete the surveys within the defined populations to include needed seasonal variations and complete definition of diets within the regions being surveyed. The data collected should also include the amounts of traditional foods consumed by Alaska Native villagers and others residing in the villages, the portion of the diet that is non-traditional, seasonal dietary variations, and the methods of preservation and preparation of the food items.
6. Compile the data, extracting the information as appropriate, and organizing the results in a database format that can be utilized for inter-regional analysis.

E. Application Content

In a narrative form, the application should include a discussion of areas under the ''Evaluation Criteria'' section of this announcement as they relate to the proposed program. These criteria serve as the basis for evaluating the application; therefore, omissions or incomplete information may affect the rating of the application. This program does not require in-kind support or matching funds, however, the applicant should describe any in-kind support in the application.

The narrative should be no more than 25 pages, double-spaced, printed on one-side, with 1″ margins, and unreduced fonts (font size 12 point) on 8½″ by 11″ paper. The pages must be clearly numbered, and a complete index to the application and its appendices must be included. The original and two copies of the application must be submitted unstapled and unbound.

F. Submission and Deadline

Submit the original and two copies of PHS 5161–1 (OMB Number 0937–0189). Forms are available at the following Internet address: *www.cdc.gov/od/pgo/forminfo.htm,* or in the application kit.

On or before August 15, 2001, submit the application to the Grants Management Specialist identified in the ''Where to Obtain Additional Information'' section of this announcement.

G. Evaluation Criteria

The application will be evaluated against the following criteria by an independent review group appointed by ATSDR.

1. Proposed Program (50 percent)

The extent to which the application addresses:

(a) The approach, feasibility, adequacy, and rationale of the proposed project design;

(b) the technical merit of the proposed project, including the degree to which the project can be expected to yield results that meet the program description as described in the purpose and program requirements sections of the announcement;

(c) the proposed project timeline, including clearly established project objectives for which progress toward attainment can and will be measured;

(d) the proposed community involvement strategy;

(e) the proposed method to disseminate the results to the village communities and tribal governments, State and local public health officials, and other concerned individuals and organizations;

(f) a plan for evaluating the project's effectiveness in meeting the objectives.

2. Program Personnel (25 percent)

The extent to which the application has described the qualifications, experience, and commitment of the principal investigator (or project director) and his/her ability to devote adequate time and effort to provide effective leadership.

3. Applicant Capability and Coordination Efforts (25 percent)

The extent to which the application has described:

(a) the capability of the applicant's administrative structure to foster successful scientific and administrative management of the program;

(b) the capability of the applicant to demonstrate an appropriate plan for interaction with the community; and

(c) the level of collaboration needed to conduct the program; and demonstrate that an advisory group can be established at the onset of the project.

4. Program Budget—(not scored)

The extent to which the budget is reasonable, clearly justified, and consistent with intended use of cooperative agreement/grant funds.

5. Human Subjects (not scored)

Does the application adequately address the requirements of Title 45 CFR part 46 for the protection of human subjects?

H. Other Requirements

Technical Reporting Requirements

Provide CDC with original plus two copies of—

1. Annual progress report;

2. Financial status report, no more than 90 days after the end of the budget period; and

3. Final financial and performance reports, no more than 90 days after the end of the project period.

Send all reports to the Grants Management Specialist identified in the ''Where to Obtain Additional Information'' section of this announcement.

The following additional requirements are applicable to this program. For a complete description of each, see Attachment I of the announcement in the application kit.

AR–10 Smoke-Free Workplace Requirements

AR–11 Healthy People 2010

AR–12 Lobbying Restrictions

AR–18 Cost Recovery—ATSDR

AR–19 Third Party Agreements—ATSDR

I. Authority and Catalog of Federal Domestic Assistance Number

This program is authorized under section 104 (i)(5)(A) of the Comprehensive Environmental Response, Compensation and Liability Act (CERCLA) of 1980 as amended by the Superfund Amendments and Reauthorization Act (SARA) of 1986 [42 U.S.C. 9604 (i)(5)(9A), and (15)] and U.S. Senate Report 106–410. The Catalog of Federal Domestic Assistance number is 93.161.

J. Where To Obtain Additional Information

This and other ATSDR announcements can be found on the CDC home page Internet address—*http://www.cdc.gov.* Click on ''Funding'' then ''Grants and Cooperative Agreements.''

If you have questions after reviewing the contents of all the documents, business management technical assistance may be obtained from:

Nelda Y. Godfrey, Grants Management Specialist, Grants Management Branch, Procurement and Grants Office, Centers for Disease Control and Prevention, 2920 Brandywine Road, Room 3000, Atlanta, GA 30341–4146, Telephone number: 770–488–2722, Email address: *nag9@cdc.gov*

For program technical assistance, contact: Leslie C. Campbell, Environmental Health Scientist, Division of Health Assessment and Consultation, Agency for Toxic Substances and Disease Registry, 1600 Clifton Road, MS E–32, Atlanta, GA 30333, Telephone number: 404–498–0473, Email address: *lcampbell@cdc.gov*

or

William Cibulas, Chief, Research Implementation Branch, Division of Toxicology, Agency for Toxic Substances and Disease Registry, 1600 Clifton Road, MS E–29, Atlanta, GA 30333, Telephone number: 404–498–0715, Email address: *wcibulas@cdc.gov.*

Dated: June 26, 2001.

Georgi Jones,

Director, Office of Policy and External Affairs, Agency for Toxic Substances and Disease Registry.

[FR Doc. 01–16626 Filed 7–2–01; 8:45 am]

BILLING CODE 4163–70–P

DEPARTMENT OF HEALTH AND HUMAN SERVICES

Centers for Disease Control and Prevention

[30DAY–41–01]

Agency Forms Undergoing Paperwork Reduction Act Review

The Centers for Disease Control and Prevention (CDC) publishes a list of information collection requests under review by the Office of Management and Budget (OMB) in compliance with the Paperwork Reduction Act (44 U.S.C. Chapter 35). To request a copy of these requests, call the CDC Reports Clearance Officer at (404) 639–7090. Send written comments to CDC, Desk Officer; Human Resources and Housing Branch, New Executive Office Building, Room 10235; Washington, DC 20503. Written comments should be received within 30 days of this notice.

Proposed Project

National Exposure Registry—Extension—(OMB No. 0923–0006) Agency for Toxic Substances and Disease Registry (ATSDR), Centers for Disease Control and Prevention (CDC). The Agency for Toxic Substances and Disease Registry (ATSDR) is mandated pursuant to the 1980 Comprehensive Environmental Response Compensation and Liability Act (CERCLA) and its 1986 Amendments, the Superfund Amendments and Re-authorization Act (SARA), to establish and maintain a national registry of persons who have been exposed to hazardous substances in the environment and a national registry of persons with illnesses or health problems resulting from such exposure. ATSDR created the National Exposure Registry (NER) as a result of this legislation in an effort to provide scientific information about potential adverse health effects people develop as a result of low-level, long-term exposure to hazardous substances.

The National Exposure Registry is a program that collects, maintains, and analyzes information obtained from participants (called registrants) whose exposure to selected toxic substances at specific geographic areas in the United States was documented. Relevant health data and demographic information are also included in the NER database. The NER databases furnish the information needed to generate appropriate and valid hypothesis for future activities such as epidemiologic studies. The NER also serves as a mechanism for longitudinal health investigations that follow registrants over time to ascertain

adverse health effects and latency periods.

The NER is currently composed of four sub-registries of persons known to have been exposed to specific chemicals: 1,1,1,-Trichloroethane (TCA), Trichloroethylene (TCE), 2,3,7,8-tetrachlorodibenzo-p-dioxin (dioxin), and benzene. In 2001, the NER will establish a new asbestos subregistry.

Participants in each subregistry are interviewed initially with a baseline questionnaire. An identical follow-up telephone questionnaire is administered to participants every three years until the criteria for terminating a specific subregistry have been met. The annual number of participants varies greatly from year to year. Two factors influencing the number of respondents per year are the number of subregistry updates that are scheduled and whether a new subregistry will be established. The addition of the new asbestos subregistry is expected to add approximately 6,000 persons to the NER. This increase is reflected in the following estimated burden table.

The following table is annualized to reflect one new subregistry (asbestos) and five updates for the requested three-year extension of OMB No. 0923–0006. The estimated annualized burden is 3,053 hours.

Respondents	Number of responses	Responses per respondent	Avg. burden per response (in hours)
One New Subregistry	2,000	1	30/60
Five Updates	4,927	1	25/60

Dated: June 25, 2001.

Nancy Cheal,

Acting Associate Director for Policy, Planning, and Evaluation, Centers for Disease Control and Prevention (CDC).

[FR Doc. 01–16627 Filed 7–2–01; 8:45 am]

BILLING CODE 4163–18–P

DEPARTMENT OF HEALTH AND HUMAN SERVICES

Centers for Disease Control and Prevention

[30DAY–40–01]

Agency Forms Undergoing Paperwork Reduction Act Review

The Centers for Disease Control and Prevention (CDC) publishes a list of information collection requests under review by the Office of Management and Budget (OMB) in compliance with the Paperwork Reduction Act (44 U.S.C. Chapter 35). To request a copy of these requests, call the CDC Reports Clearance Officer at (404) 639–7090. Send written comments to CDC, Desk Officer; Human Resources and Housing Branch, New Executive Office Building, Room 10235; Washington, DC 20503. Written comments should be received within 30 days of this notice.

Proposed Project

Model Performance Evaluation Program for Retroviral and AIDS-Related Testing—Revision—OMB No. 0920–0274 Public Health Practice Program Office (PHPPO), Centers for Disease Control and Prevention (CDC). The Centers for Disease Control and Prevention Model Performance Evaluation Program (MPEP) currently assesses the performance of laboratories that test for human immunodeficiency virus type 1 (HIV–1) antibody, human T-lymphotropic virus types I and II (HTLV–I/II) antibody, perform CD4 T-cell testing or T-lymphocyte immunophenotyping (TLI) by flow cytometry or alternate methods, perform HIV–1 ribonucleic acid (RNA) determinations (viral load), and test for HIV–1 p24 antigen through the use of mailed sample panels. The CDC MPEP is proposing to use annual data collection documents to gain updated information on the characteristics of testing laboratories and their testing practices.

Two data collection instruments, or survey questionnaires will be used. The first data collection instrument will be concerned with laboratories that perform HIV–1 antibody (Ab) testing, HTLV–I/II Ab testing, HIV–1 viral RNA determinations, and HIV–1 p24 antigen (Ag) testing. Laboratories enrolled in the MPEP will be mailed a survey questionnaire and be asked to complete the sections pertinent to their laboratory's testing. The survey instrument will collect demographic information related to laboratory type, primary purpose for testing, types of specimens tested, minimum education requirements of testing personnel, laboratory director, and laboratory supervisor, and training required of testing personnel. The demographic section will be followed by more specific sections related directly to HIV–1 Ab testing, HTLV–I/II Ab testing, HIV–1 RNA, and HIV–1 p24 Ag testing. Included in the latter sections will be questions related to the types of tests performed, the algorithm of testing, how test results are interpreted, how results are reported, how specimens may be rejected for testing, if some testing is referred to other laboratories, and what quality control and quality assurance procedures are conducted by the laboratory. Similarly, the TLI survey questionnaire will also collect demographic information about each laboratory, as well as, the type(s) of flow cytometer used, educational and training requirements of testing personnel, the types of monoclonal antibodies used in testing, how specimens are received, prepared, and stored, how test results are recorded and reported to the test requestor, and what quality control and quality assurance procedures are practiced.

Information collected through the use of these instruments will enable CDC to determine if laboratories are conforming to published recommendations and guidelines, whether education and training requirements of testing personnel are conforming to current legislative requirements, and whether problems in testing can be identified through the collection of information. Information collected through the survey instruments will then be compared statistically with the performance evaluation results reported by the enrolled laboratories to determine if characteristics of laboratories that perform well can be distinguished from laboratories not performing as well. Upon enrolling in the MPEP, participants are assigned an MPEP number used to report testing results and survey questionnaire responses allowing the individual responses of each laboratory participant to be treated in confidence. When participants respond to the surveys by sending CDC completed questionnaires, the collected information is developed into aggregate reports. A copy of the completed report is provided to each participating laboratory. Total annual burden for this data collection is 941 hours.

Respondents	No. of respondents	No. of respondents per response	Average burden per response (in hrs)
MPEP Enrollment Form	100	1	6/60
Retroviral Survey	1,000	1	30/60
TLI Survey	325	1	30/60
HIV–1 Ab PE Results Form	900	2	10/60
HIV–1 p24 Ag PE Results Form	175	2	10/60
HIV–1 RNA PE Results Form	210	2	10/60
HTLV I/II Ab PE Results Form	225	2	10/60
TLI PE Results Form	300	2	10/60

Dated: June 25, 2001.

Nancy Cheal,

Acting Associate Director for Policy, Planning, and Evaluation, Centers for Disease Control and Prevention.

[FR Doc. 01–16628 Filed 7–2–01; 8:45 am]

BILLING CODE 4163–18–P

DEPARTMENT OF HEALTH AND HUMAN SERVICES

Centers for Disease Control and Prevention

[30DAY–39–01]

Agency Forms Undergoing Paperwork Reduction Act Review

The Centers for Disease Control and Prevention (CDC) publishes a list of information collection requests under review by the Office of Management and Budget (OMB) in compliance with the Paperwork Reduction Act (44 U.S.C. Chapter 35). To request a copy of these requests, call the CDC Reports Clearance Officer at (404) 639–7090. Send written comments to CDC, Desk Officer; Human Resources and Housing Branch, New Executive Office Building, Room 10235; Washington, DC 20503. Written comments should be received within 30 days of this notice.

Proposed Project

SAFE—Know Now—Media Campaign Evaluation—New—National Center for HIV, STD, and TB Prevention (NCHSTP), Centers for Disease and Prevention (CDC) proposes a media campaign to promote knowledge of HIV status, using marketing clusters to target media messages. The purpose of this campaign is to increase the number of HIV positive people who are aware of their status and are receiving appropriate medical treatment. It is believed that knowledge of infection will reduce risk behavior and medical treatment will reduce infectiousness. The Safe—Know Now—campaign has identified segments or 'clusters' of potential audience members based on geographic and demographic information. By targeting communications at these specific clusters, messages can be more effectively and efficiently conveyed to the proper audiences. CDC has utilized this approach to design media communications for target audiences as defined by Claritas PRIZM clusters. Beyond the immediate effectiveness of the campaign, the evaluation also seeks to determine if PRIZM targeting has proven to be an effective tool for communicating health messages.

CDC will conduct an evaluation of this campaign which will target five Claritas PRIZM clusters that currently have the highest incidences of AIDS cases. This clusters include Bohemian Mix (cluster 10), Single City Blues (cluster 45), Hispanic Mix (cluster 46), Inner Cities (cluster 47), and Southside City (cluster 51). The primary method for data collection will be a 15-minute campaign tracking survey administered via telephone in three markets, including two test markets and one control market. The test markets will be exposed to the campaign materials, while the control market will not. Pre- and post-exposure telephone surveys will be collected in each of the three markets, allowing comparison before and after effects of the campaign. Both the pre- and post-exposure market readings will be conducted with different samples, not with the same individuals across both waves. The total response burden for this data collection is 1,800 hours.

Respondents	No. of respondents	No. of responses per respondent	Average burden per response (in hours)
Telephone Survey—Pre	3,600	1	15/60.
Telephone Survey—Post	3,600	1	15/60.

Dated: June 25, 2001.

Nancy Cheal,

Deputy Director for Policy, Planning, and Evaluation, Centers for Disease Control and Prevention.

[FR Doc. 01–16629 Filed 7–2–01; 8:45 am]

BILLING CODE 4163–18–P

DEPARTMENT OF HEALTH AND HUMAN SERVICES

Centers for Disease Control and Prevention

[Program Announcement 01161]

Enhance Research, Infrastructure, and Capacity Building for American Indian Tribal Colleges and Universities; Notice of Availability of Funds

A. Purpose

The Centers for Disease Control and Prevention (CDC) and the Agency for Toxic Substances and Disease Registry (ATSDR) announces the availability of fiscal year (FY) 2001 funds for a cooperative agreement program. The purpose of the program is to assist the American Indian Tribal Colleges and Universities in developing the commitment and capacity to promote education, development, research, leadership and community partnerships that enhance the participation of American Indians in the health professions; and to enhance the health status of American Indians in the United States.

The CDC and ATSDR are committed to achieving the health promotion and disease prevention objectives of ''Healthy People 2010'', a national activity to reduce morbidity and mortality and to improve the quality of life. This announcement is related to the ''Healthy People 2010'' objectives which specify improving the health of groups of people bearing a disproportionate burden of poor health as compared to the total population. The framework of ''Heathy People 2010'' consists of two broad goals which are to:

1. increase quality and years of healthy life; and
2. eliminate health disparities.

''Healthy People'' is the national prevention initiative that identifies opportunities to improve the health of all Americans. For a copy of ''Healthy People 2010'' visit the internet site: http://www.health.gov.healtlhypeople.

B. Eligible Applicants

To be eligible for funding under this announcement, applicants must be a tax-exempt private or public non-profit organization with Internal Revenue Service (IRS) Code, Section 501(c)(3) status; tribal colleges in the United States; or federally recognized Indian Tribal governments, Indian tribes or Indian Tribal organizations.

If the applicant is applying as a tax exempt non-profit organization, proof of non-profit tax-exempt status must be provided with the application. CDC will not accept an application without proof of tax-exempt status. Non-profit tax-exempt status is determined by the IRS Code, Section 501(c)(3). Tax-exempt status may be proved by providing a current copy of the 501(c)(3) non-profit tax-exempt of the current IRS Determination Letter.

Note: Title 2 of the United States Code, Chapter 26, Section 1611 states that an organization described in section 501(c)(4) of the Internal Revenue Code that engages in lobbying activities is not eligible to receive Federal funds constituting an award, grant, or loan.

C. Availability of Funds

Approximately $200,000 is available in FY 2001 to fund the Central Coordinating Organization for this cooperative agreement. It is expected that additional funds may be made available through other Centers, Institutes and Program Offices (CIOs), within the CDC/ATSDR to fund supplemental awards under this cooperative agreement for projects of Tribal Colleges and Universities with whom the applicant collaborates. It is expected that the awards will begin on or about September 1, 2001, and will be made for a 12-month budget period, within a project period of up to five years. Funding estimates may change.

Continuation awards within the project period will be made on the basis of satisfactory progress as evidenced by required reports and the availability of funds.

D. Program Requirements

In conducting activities to achieve the purpose of this program, the recipient will be responsible for the activities under 1. (Recipient Activities), and CDC will be responsible for the activities listed under 2. (CDC Activities).

1. Recipient Activities:

a. Curriculum, Technology, and Infrastructure Development

(1) Determine what the Tribal Colleges and Universities are currently doing in regards to Public Health and Health prevention, *e.g.* curriculum, program prevention services, and health promotion activities.

(2) Assist Tribal Colleges and Universities in increasing their knowledge of the Federal grants application process, such as budget initiation and grant writing.

(3) Develop distance based learning programs, satellite and video conferencing opportunities, and other information systems for Tribal Colleges and Universities to enhance the educational opportunities in the fields of public health and to enhance the research, statistical, and public health educational skills of the students.

(4) Enhance access to culturally relevant instructional material focusing on epidemiology, environmental health, public health, and biostatistics for the Tribal Colleges and Universities.

b. Professional Development and Continuing Education

(1) Assist Tribal Colleges and Universities in developing curricula for educating and training students in introductory courses in the fields of public health, occupational health, environmental health, allied health, and other health related areas.

(2) Assist Tribal Colleges and Universities in establishing faculty development opportunities at the CDC/ATSDR.

c. Student Training Opportunities, Fellowship Programs, and Internship Programs

(1) Assist Tribal Colleges and Universities in establishing CDC/ATSDR internship and fellowship opportunities that will enable students to gain knowledge and experience in public health practices.

(2) Assist the Tribal Colleges and Universities in developing public health classroom instructional materials and practicum opportunities for field assignees for their member schools.

(3) Assist Tribal Colleges and Universities in identifying other new public health field experiences for American Indians.

d. Capacity Building and Resource Development

(1) Serve as a resource for Tribal Colleges and Universities in developing educational programs targeting public health professionals.

(2) Enhance access to health related resource information, instructional material, and teaching techniques for health professionals at the Tribal Colleges and Universities.

(3) Assist Tribal Colleges and Universities in developing culturally competent prevention research and related educational programs for communities serving American Indians.

e. Program Coordination and Coalition Building

(1) Assist Tribal Colleges and Universities in collaborating with State and local health departments, as well as community-based organizations, in providing special needs projects that provide an opportunity for ''hands on'' experience for instructors and students.

(2) Sponsor and facilitate conferences/forums that promote collaboration and coalition building among Tribal Colleges and Universities, Federal, and private partners.

f. Needs Assessment

(1) Conduct a needs assessment with Tribal Colleges and Universities' faculty and students to identify educational needs and current public health practices.

(2) Assist Tribal Colleges and Universities in establishing research priorities for funding purposes, and to assist Tribal Colleges and Universities in identifying health disparities.

g. Public Health Research in Prevention, Policy, and Dissemination

(1) Assist Tribal College and Universities in evaluating multi-component, community-based intervention strategies that address health disparities among American Indians.

(2) Assist Tribal Colleges and Universities in developing research activities that have an impact on eliminating health disparities among American Indians.

(3) Assist Tribal Colleges and Universities in assessing the impact of public health infrastructure, and policy changes on disease, injury, and disability.

(4) Assist Tribal Colleges and Universities in providing faculty and student training and other career development opportunities in prevention research that are critical to the mission and goals of CDC and ATSDR.

2. CDC/ATSDR Activities:

CDC/ATSDR will provide technical assistance and guidance as requested for the activities provided under recipient requirements.

E. Applications

Use the information in the Program Requirements, Other Requirements, and Evaluation Criteria sections to develop the application content. Your application will be evaluated based on the criteria listed, so it is important to follow them in laying out your program plan. The narrative should be no more than 30 double-spaced pages, printed on one side, with one inch margins, and unreduced font.

(The narrative should consist of, at a minimum, a Plan, Objectives, Methods, Evaluation and Budget.)

F. Submission and Deadline

Submit the original and five copies of PHS–398 (OMB Number 0925–001) (adhere to the instructions on the Errata Instruction Sheet for PHS 398)]. Forms are available in the application kit and *www.cdc.gov/od/pgo/forminfo.htm.*

On or before August 13, 2001, submit the application to the Grants Management Specialist identified in the ''Where to Obtain Additional Information'' section of this announcement.

Deadline: Applications shall be considered as meeting the deadline if they are either:

1. Received on or before the deadline date; or

2. Sent on or before the deadline date and received in time for submission to the independent review group. (Applicants must request a legibly dated U.S. Postal Service postmark or obtain a legibly dated receipt from a commercial carrier or U.S. Postal Service. Private metered postmark shall not be acceptable as proof of timely mailing.)

Late: Applications which do not meet the criteria in 1. or 2. above, will be returned to the applicant.

G. Evaluation Criteria

The funding provided in this announcement is being made only for the Central Coordinating Organization. When applications for special projects (those submitted by Tribal Colleges and Universities) are later submitted, they will be funded separately. Each application will be evaluated individually by an independent review group appointed by CDC/ATSDR. Special projects will be evaluated based on criteria for special projects. Applications from Central Coordinating Organizations will be evaluated in accordance with the following criteria:

1. Organizational Summary: (25 points)

a. The extent to which the applicant describes the history, nature, and extent of its relevant experience within the last two years with supporting documentation.

b. The extent to which the applicant describes existing facilities and staff (including resumes and job descriptions) to accomplish the desired outcomes.

2. History and Experience in working with public health programs with Ethnic/Racial Groups: (20 points)

a. Extent to which the applicant documents at least two years of experience and success in operating and administering a public health or related program serving the target population.

b. Extent to which applicant documents experience in working on public health programs with ethnic/racial groups.

c. The adequacy of the organization's proposed staffing and collaborations with partners, to meet the design and evaluation needs of the project. Include the nature of the partnership, members of the partnership, and relevant experience.

3. Capacity of the organization to work with Tribal Colleges and Universities: (25 points)

a. Organization must show proof of previous experience in working with Tribal Colleges and Universities; or with the target population group within the last four years.

b. Organization must provide letters of support from several Tribal Colleges and Universities showing that a collaborative partnership has been formed.

4. Action Plan: (15 points)

a. Extent to which the applicant demonstrates a thorough and reasonable plan in developing the program, including assurance of community participation and participation of Tribal Colleges and Universities in the planning process.

b. The extent to which the applicant provides a reasonable and complete schedule for implementing all activities.

c. The extent to which concurrence with the applicant's plans are concurred by Tribal Colleges and Universities.

5. Evaluation Plan: (15 points)

a. The extent to which the proposed evaluation plan is detailed and will document program process, effectiveness, impact and outcome.

b. The extent to which the applicant demonstrates potential data sources for evaluation purposes, and documents staff availability, expertise, and capacity to perform the evaluation.

c. The extent to which a feasible plan for reporting evaluation results and using evaluation information for programmatic decisions is included.

6. Budget and Justification: (not scored)

The extent to which the applicant provides a detailed budget and narrative justification consistent with stated

objectives and planned program activities.

Applications for special projects (those submitted by member schools and the Cental Coordination Organization) will be evaluated individually in accordance with the following criteria:

1. Background, Purpose, and Priority Area(s): (20 points)

a. The extent to which the applicant described the health status of the target population group(s) geographic community, and priority area(s) to be addressed.

b. The extent to which the applicant uses data (if available) and other supporting evidence to document the health status of the racial/ethnic population groups and health disparities within the group, the appropriateness of the target population sizes for the priority area(s) selected.

c. The degree of the disparity between the target population and the general population based on local, State, and national data which directly supports the basis for the health disparity in the priority area(s) selected.

2. Program Objectives: (15 points)

a. The extent to which the proposed objectives are specific, measurable, time-phased, and consistent with the program purpose and the proposed activities, and consistent with the applicant organization's overall mission.

b. The extent to which the applicant has included objectives which are feasible to be accomplished during the budget period, and which address all activities necessary to accomplish the purpose of the proposal.

3. Action Plan: (20 points)

a. Extent to which the applicant demonstrates a thorough and reasonable plan in developing the program, including assurance of community participation and participation in the planning process.

b. The extent to which the applicant provides a reasonable and complete schedule for implementing all activities.

c. The extent to which concurrence with the applicant's plans are concurred by all collaborating parties.

4. Evaluation Plan: (15 points)

a. The extent to which the proposed evaluation plan is detailed and will document program process, effectiveness, impact and outcome.

b. The extent to which the applicant demonstrates potential data sources for evaluation purposes, and documents staff availability, expertise, and capacity to perform the evaluation.

c. The extent to which a feasible plan for reporting evaluation results and using evaluation information for programmatic decisions is included.

5. Research Plan: (20 points)

The degree to which the applicant has met the CDC Policy requirements regarding the inclusion of women, ethnic, and racial groups in the proposed research. This includes:

a. The proposed plan for the inclusion of both sexes and racial and ethnic minority populations for appropriate representation.

b. The proposed justification when representation is limited or absent.

c. A statement as to whether the design of the study is adequate to measure differences when warranted.

d. A statement as to whether the plans for recruitment and outreach for study participants include the process of establishing partnerships with community(ies) and recognition of mutual benefits.

6. Personnel and Staffing: (10 points)

Qualifications and experience of professionals to carry out the project activities.

7. Budget and Justifications: (not scored)

The extent to which the applicant provides a detailed budget and narrative justification consistent with stated objectives and planned program activities.

8. Human Subjects: (not scored)

Does the application adequately address the requirements of Title 45 CFR Part 46 for the protection of human subjects? (Not scored; however, an application can be disapproved if the research risks are sufficiently serious and protection against risks is so inadequate as to make the entire application unacceptable.)

9. Review of Non-Competing Continuation Applications within the project period will be made on the basis of the following criteria:

a. Availability of funds;

b. Satisfactory progress made in meeting project objectives;

c. Objectives for the new budget period that are realistic, specific, and measurable;

d. Any proposed changes that benefit the objectives, methods of operation, and continuing need for cooperative agreement support;

e. Evaluation procedures which will lead to achievement of project objectives; and

f. The budget request which is clearly justified and consistent with the intended use of cooperative agreement funds.

H. Other Requirements

Technical Reporting Requirements

Provide CDC with original plus two copies of:

1. quarterly progress reports;

2. financial status report, due no more than 90 days after the end of the budget period; and

3. final financial and performance reports, no more than 90 days after the end of the project period.

Send all reports to the Grants Management Specialist identified in the ''Where to Obtain Additional Information'' section of this announcement.

The following additional requirements are applicable to this program. For a complete description of each, see Attachment I in the application kit.

AR–1 Human Subjects Requirements
AR–2 Requirements for Inclusion of Women and Racial and Ethnic Minorities in Research
AR–3 Animal Subjects Requirements
AR–5 HIV Program Review Panel Requirements
AR–9 Paperwork Reduction Act Requirements
AR–10 Smoke-Free Workplace Requirements
AR–11 Healthy People 2010
AR–12 Lobbying Restrictions
AR–14 Accounting System Requirements
AR–15 Proof of Non-Profit Status
AR–22 Research Integrity

I. Authority and Catalog of Federal Domestic Assistance Number

This program is authorized under Section 301 (a) and 317(k)(2) [42 U.S.C. 214(a) and 247b(k)(2)] of the Public Health Service Act, as amended. The Catalog of Federal Domestic Assistance number is 93.283.

J. Where To Obtain Additional Information

This and other CDC announcements can be found on the CDC home page Internet address—http://www.cdc.gov. Click on ''Funding'' then ''Grants and Cooperative Agreements.''

To receive additional written information and to request an application kit, call 1–888–472-GRANTS4 (1–888–472–6874). You will be asked to leave your name and address and will be instructed to identify the Program Announcement number of interest.

If you have questions after reviewing the contents of all the documents,

business management technical assistance may be obtained from: Peaches Brown, Grants Management Specialist, Grants Management Branch, Procurement and Grants Office, Centers for Disease Control and Prevention, 2920 Brandywine Road, Room 3000 MS–15, Atlanta, Georgia 30341–4146, Telephone number: 770–488–2738, Email address: prb0@cdc.gov

For program technical assistance, contact: Karen H. Bouye, Senior Advisor for Research, Office of the Associate Director for Minority Health, Office of the Director, Centers for Disease Control and Prevention, 1600 Clifton Road, Northeast, Mailstop D–39, Atlanta, Georgia 30333, Telephone: (404) 639–4313, Email address: keh2@cdc.gov

Dated: June 27, 2000.

John L. Williams,

Director, Procurement and Grants Office, Centers for Disease Control and Prevention (CDC).

[FR Doc. 01–16656 Filed 7–2–01; 8:45 am]

BILLING CODE 4163–18–P

DEPARTMENT OF HEALTH AND HUMAN SERVICES

Health Care Financing Administration

[Document Identifier: HCFA–10033]

Agency Information Collection Activities: Submission for OMB Review; Comment Request

In compliance with the requirement of section 3506(c)(2)(A) of the Paperwork Reduction Act of 1995, the Health Care Financing Administration (HCFA), Department of Health and Human Services, has submitted to the Office of Management and Budget (OMB) the following proposal for the collection of information. Interested persons are invited to send comments regarding the burden estimate or any other aspect of this collection of information, including any of the following subjects: (1) the necessity and utility of the proposed information collection for the proper performance of the agency's functions; (2) the accuracy of the estimated burden; (3) ways to enhance the quality, utility, and clarity of the information to be collected; and (4) the use of automated collection techniques or other forms of information technology to minimize the information collection burden.

Type of Information Collection Request: New Collection;

Title of Information Collection: Data Collection to Support Policy Analysis of Choices Offered to Medicare+Choice Enrollees and Choices Made by Enrollees;

Form No.: HCFA–10033 (OMB#0938–NEW);

Use: The purpose of this information collection is to collect data from Medicare+Choice (M+C) organizations regarding choices that Medicare beneficiaries make as M+C enrollees. Information will be collected regarding enrollment and benefits, particularly for employment-connected individuals and will help HCFA fully evaluate the effectiveness of the M+C program. All Medicare Managed Care organizations will be surveyed;

Frequency: Other: One-time;

Affected Public: Business or other for-profit;

Number of Respondents: 200;

Total Annual Responses: 200;

Total Annual Hours: 1,600.

To obtain copies of the supporting statement for the proposed paperwork collections referenced above, access HCFA's web site address at *http://www.hcfa.gov/regs/prdact95.htm,* or E-mail your request, including your address and phone number, to Paperwork@hcfa.gov, or call the Reports Clearance Office on (410) 786–1326. Written comments and recommendations for the proposed information collections must be mailed within 30 days of this notice directly to the OMB Desk Officer designated at the following address: OMB Human Resources and Housing Branch, Attention: Allison Eydt, New Executive Office Building, Room 10235, Washington, DC 20503.

Dated: May 22, 2001.

John P. Burke, III,

HCFA Reports Clearance Officer, HCFA, Office of Information Services, Security and Standards Group, Division of HCFA Enterprise Standards.

[FR Doc. 01–16632 Filed 7–2–01; 8:45 am]

BILLING CODE 4120–03–P

DEPARTMENT OF HEALTH AND HUMAN SERVICES

Health Care Financing Administration

[HCFA–1147–CN]

RIN 0938–AK51

Medicare Program; Update to the Prospective Payment System for Home Health Agencies for FY 2002; Correction

AGENCY: Health Care Financing Administration (HCFA), HHS.

ACTION: Notice with comment period; correction.

SUMMARY: We published a notice with comment period in the **Federal Register** on June 29, 2001, setting forth an update to the 60-day national episode rates and the national per-visit amounts under the Medicare prospective payment system for home health agencies. The document was missing the addenda for the rural and urban hospital wage indexes. This notice corrects the June 29, 2001 document by adding the addenda.

EFFECTIVE DATE: October 1, 2001.

FOR FURTHER INFORMATION CONTACT:

Bob Wardwell, Project Manager, (410) 786–3254.

Susan Levy, Policy, (410) 786–9364.

SUPPLEMENTARY INFORMATION:

Correction

In the **Federal Register** of June 29, 2001 in FR Doc. 01–16384, we published a notice with comment period setting forth an update to the 60-day national episode rates and the national per-visit amounts under the Medicare prospective payment system for home health agencies. The document was missing the addenda for the rural and urban hospital wage indexes. This notice corrects the June 29, 2001 document by adding the addenda.

Attachments

Addendum A—FY 2001 Wage Index For Rural Areas—Pre-floor and Pre-reclassified

Addendum B—FY 2001 Wage Index For Urban Areas—Pre-floor and Pre-reclassified

Addendum A—FY 2001 Wage Index for Rural Areas—Pre-floor and Pre-reclassified

WAGE INDEX FOR RURAL AREAS

Nonurban area	Wage Index
Alabama	0.7489
Alaska	1.2392
Arizona	0.8317
Arkansas	0.7445
California	0.9861
Colorado	0.8968
Connecticut	1.1715
Delaware	0.9074
Florida	0.8919
Georgia	0.8329
Guam	0.9611
Hawaii	1.1059
Idaho	0.8678
Illinois	0.8160
Indiana	0.8602
Iowa	0.8030
Kansas	0.7605
Kentucky	0.7931
Louisiana	0.7681
Maine	0.8766
Maryland	0.8651
Massachusetts	1.1204
Michigan	0.8987
Minnesota	0.8881
Mississippi	0.7491
Missouri	0.7698

WAGE INDEX FOR RURAL AREAS—Continued

Nonurban area	Wage Index
Montana	0.8688
Nebraska	0.8109
Nevada	0.9232
New Hampshire	0.9845
New Jersey [1].	
New Mexico	0.8479
New York	0.8499
North Carolina	0.8441
North Dakota	0.7716
Ohio	0.8670
Oklahoma	0.7491
Oregon	1.0132
Pennsylvania	0.8578
Puerto Rico	0.4264
Rhode Island [1].	
South Carolina	0.8370
South Dakota	0.7570
Tennessee	0.7838
Texas	0.7502
Utah	0.9037
Vermont	0.9274
Virginia	0.8189
Virgin Islands	0.6306
Washington	1.0434
West Virginia	0.8231
Wisconsin	0.8880
Wyoming	0.8817

[1] All counties within the State are classified as urban.

Addendum B—FY 2001 Wage Index For Urban Areas—Pre-floor and Pre-reclassified

MSA	Urban area (Constituent counties)	Wage index
0040	Abilene, TX	0.8240
	Taylor, TX.	
0060	Aguadilla, PR	0.4391
	Aguada, PR.	
	Aguadilla, PR.	
	Moca, PR.	
0080	Akron, OH	0.9736
	Portage, OH.	
	Summit, OH.	
0120	Albany, GA	0.9933
	Dougherty, GA.	
	Lee, GA.	
0160	Albany-Schenectady-Troy, NY.	0.8549
	Albany, NY.	
	Montgomery, NY.	
	Rensselaer, NY.	
	Saratoga, NY.	
	Schenectady, NY.	
	Schoharie, NY.	
0200	Albuquerque, NM	0.9136
	Bernalillo, NM.	
	Sandoval, NM.	
	Valencia, NM.	
0220	Alexandria, LA	0.8123
	Rapides, LA.	
0240	Allentown-Bethlehem-Easton, PA.	0.9925
	Carbon, PA.	
	Lehigh, PA.	
	Northampton, PA.	
0280	Altoona, PA	0.9346
	Blair, PA.	
0320	Amarillo, TX Potter, TX	0.8715
	Randall, TX.	
0380	Anchorage, AK	1.2793
	Anchorage, AK.	
0440	Ann Arbor, MI	1.1254
	Lenawee, MI.	
	Livingston, MI.	
	Washtenaw, MI.	
0450	Anniston, AL	0.8284
	Calhoun, AL.	
0460	Appleton-Oshkosh-Neenah, WI.	0.9052
	Calumet, WI.	
	Outagamie, WI.	
	Winnebago, WI.	
0470	Arecibo, PR	0.4525
	Arecibo, PR.	
	Camuy, PR.	
	Hatillo, PR.	
0480	Asheville, NC	0.9516
	Buncombe, NC.	
	Madison, NC.	
0500	Athens, GA	0.9739
	Clarke, GA.	
	Madison, GA.	
	Oconee, GA.	
0520	Atlanta, GA	1.0096
	Barrow, GA.	
	Bartow, GA.	
	Carroll, GA.	
	Cherokee, GA.	
	Clayton, GA.	
	Cobb, GA.	
	Coweta, GA.	
	DeKalb, GA.	
	Douglas, GA.	
	Fayette, GA.	
	Forsyth, GA.	
	Fulton, GA.	
	Gwinnett, GA.	
	Henry, GA.	
	Newton, GA.	
	Paulding, GA.	
	Pickens, GA.	
	Rockdale, GA.	
	Spalding, GA.	
	Walton, GA.	
0560	Atlantic-Cape May, NJ	1.1182
	Atlantic, NJ	
	Cape May, NJ	
0580	Auburn-Opelka, AL	0.8106
	Lee, AL.	
0600	Augusta-Aiken, GA–SC	0.9160
	Columbia, GA.	
	McDuffie, GA.	
	Richmond, GA.	
	Aiken, SC.	
	Edgefield, SC.	
0640	Austin-San Marcos, TX	0.9577
	Bastrop, TX.	
	Caldwell, TX.	
	Hays, TX.	
	Travis, TX.	
	Williamson, TX.	
0680	Bakersfield, CA	0.9678
	Kern, CA.	
0720	Baltimore, MD	0.9365
	Anne Arundel, MD.	
	Carroll, MD.	
	Harford, MD.	
	Howard, MD.	
	Queen Anne's, MD.	
0733	Bangor, ME	0.9561
	Penobscot, ME.	
0743	Barnstable-Yarmouth, MA.	1.3839
	Barnstable, MA.	
0760	Baton Rouge, LA	0.8842
	Ascension, LA.	
	East Baton Rouge, LA.	
	Livingston, LA.	
	West Baton Rouge, LA.	
0840	Beaumont-Port Arthur, TX.	0.8744
	Hardin, TX.	
	Jefferson, TX.	
	Orange, TX.	
0860	Bellingham, WA	1.1439
	Whatcom, WA.	
0870	Benton Harbor, MI	0.8671
	Berrien, MI.	
0875	Bergen-Passaic, NJ	1.1848
	Bergen, NJ.	
	Passaic, NJ.	
0880	Billings, MT	0.9585
	Yellowstone, MT.	
0920	Biloxi-Gulfport-Pascagoula, MS.	0.8236
	Hancock, MS.	
	Harrison, MS.	
	Jackson, MS.	
0960	Binghamton, NY	0.8690
	Broome, NY.	
	Tioga, NY.	
1000	Birmingham, AL	0.8452
	Blount, AL.	
	Jefferson, AL.	
	St. Clair, AL.	
	Shelby, AL.	
1010	Bismarck, ND	0.7705
	Burleigh, ND.	
	Morton, ND.	
1020	Bloomington, IN	0.8733
	Monroe, IN.	
1040	Bloomington-Normal, IL	0.9095
	McLean, IL.	
1080	Boise City, ID	0.9006
	Ada, ID.	
	Canyon, ID.	
1123	Boston-Worcester-Lawrence-Lowell-Brockton, MA–NH.	1.1160
	Bristol, MA.	
	Essex, MA.	
	Middlesex, MA.	
	Norfolk, MA.	
	Plymouth, MA.	
	Suffolk, MA.	
	Worcester, MA.	
	Hillsborough, NH.	
	Merrimack, NH.	
	Rockingham, NH.	
	Strafford, NH.	
1125	Boulder-Longmont, CO	0.9731
	Boulder, CO.	
1145	Brazoria, TX	0.8658
	Brazoria, TX.	
1150	Bremerton, WA	1.0975
	Kitsap, WA.	
1240	Brownsville-Harlingen-San Benito, TX.	0.8722

MSA	Urban area (Constituent counties)	Wage index
	Cameron, TX.	
1260	Bryan-College Station, TX.	0.8237
	Brazos, TX.	
1280	Buffalo-Niagara Falls, NY.	0.9580
	Erie, NY.	
	Niagara, NY.	
1303	Burlington, VT	1.0735
	Chittenden, VT.	
	Franklin, VT.	
	Grand Isle, VT.	
1310	Caguas, PR	0.4562
	Caguas, PR.	
	Cayey, PR.	
	Cidra, PR.	
	Gurabo, PR.	
	San Lorenzo, PR.	
1320	Canton-Massillon, OH	0.8584
	Carroll, OH.	
	Stark, OH.	
1350	Casper, WY	0.8724
	Natrona, WY.	
1360	Cedar Rapids, IA	0.8736
	Linn, IA.	
1400	Champaign-Urbana, IL	0.9198
	Champaign, IL.	
1440	Charleston-North Charleston, SC.	0.9038
	Berkeley, SC.	
	Charleston, SC.	
	Dorchester, SC.	
1480	Charleston, WV	0.9240
	Kanawha, WV.	
	Putnam, WV.	
1520	Charlotte-Gastonia-Rock Hill, NC–SC.	0.9391
	Cabarrus, NC.	
	Gaston, NC.	
	Lincoln, NC.	
	Mecklenburg, NC.	
	Rowan, NC.	
	Stanly, NC.	
	Union, NC.	
	York, SC.	
1540	Charlottesville, VA	1.0789
	Albemarle, VA.	
	Charlottesville City, VA.	
	Fluvanna, VA.	
	Greene, VA.	
1560	Chattanooga, TN–GA	0.9833
	Catoosa, GA.	
	Dade, GA.	
	Walker, GA.	
	Hamilton, TN.	
	Marion, TN.	
1580	Cheyenne, WY	0.8308
	Laramie, WY.	
1600	Chicago, IL	1.1146
	Cook, IL.	
	DeKalb, IL.	
	DuPage, IL.	
	Grundy, IL.	
	Kane, IL.	
	Kendall, IL.	
	Lake, IL.	
	McHenry, IL.	
	Will, IL.	
1620	Chico-Paradise, CA	0.9918
	Butte, CA.	
1640	Cincinnati, OH–KY–IN	0.9415
	Dearborn, IN.	
	Ohio, IN.	
	Boone, KY.	
	Campbell, KY.	
	Gallatin, KY.	
	Grant, KY.	
	Kenton, KY.	
	Pendleton, KY.	
	Brown, OH.	
	Clermont, OH.	
	Hamilton, OH.	
	Warren, OH.	
1660	Clarksville-Hopkinsville, TN–KY.	0.8204
	Christian, KY.	
	Montgomery, TN.	
1680	Cleveland-Lorain-Elyria, OH.	0.9597
	Ashtabula, OH.	
	Cuyahoga, OH.	
	Geauga, OH.	
	Lake, OH.	
	Lorain, OH.	
	Medina, OH.	
1720	Colorado Springs, CO	0.9697
	El Paso, CO.	
1740	Columbia, MO	0.8961
	Boone, MO.	
1760	Columbia, SC	0.9554
	Lexington, SC.	
	Richland, SC.	
1800	Columbus, GA–AL Russell, AL.	0.8568
	Chattahoochee, GA.	
	Harris, GA.	
	Muscogee, GA.	
1840	Columbus, OH	0.9619
	Delaware, OH.	
	Fairfield, OH.	
	Franklin, OH.	
	Licking, OH.	
	Madison, OH.	
	Pickaway, OH.	
1880	Corpus Christi, TX	0.8726
	Nueces, TX.	
	San Patricio, TX.	
1890	Corvallis, OR	1.1326
	Benton, OR.	
1900	Cumberland, MD–WV	0.8369
	Allegany, MD.	
	Mineral, WV.	
1920	Dallas, TX	0.9913
	Collin, TX.	
	Dallas, TX.	
	Denton, TX.	
	Ellis, TX.	
	Henderson, TX.	
	Hunt, TX.	
	Kaufman, TX.	
	Rockwall, TX.	
1950	Danville, VA	0.8589
	Danville City, VA.	
	Pittsylvania, VA.	
1960	Davenport-Moline-Rock Island, IA–IL.	0.8898
	Scott, IA.	
	Henry, IL.	
	Rock Island, IL.	
2000	Dayton-Springfield, OH	0.9442
	Clark, OH.	
	Greene, OH.	
	Miami, OH.	
	Montgomery, OH.	
2020	Daytona Beach, FL	0.9200
	Flagler, FL.	
	Volusia, FL.	
2030	Decatur, AL	0.8534
	Lawrence, AL.	
	Morgan, AL.	
2040	Decatur, IL	0.8125
	Macon, IL.	
2080	Denver, CO	1.0181
	Adams, CO.	
	Arapahoe, CO.	
	Denver, CO.	
	Douglas, CO.	
	Jefferson, CO.	
2120	Des Moines, IA	0.9118
	Dallas, IA.	
	Polk, IA.	
	Warren, IA.	
2160	Detroit, MI	1.0510
	Lapeer, MI.	
	Macomb, MI.	
	Monroe, MI.	
	Oakland, MI.	
	St. Clair, MI.	
	Wayne, MI.	
2180	Dothan, AL	0.7943
	Dale, AL.	
	Houston, AL.	
2190	Dover, DE	1.0078
	Kent, DE.	
2200	Dubuque, IA	0.8746
	Dubuque, IA.	
2240	Duluth-Superior, MN–WI.	1.0032
	St. Louis, MN.	
	Douglas, WI.	
2281	Dutchess County, NY ..	1.0249
	Dutchess, NY.	
2290	Eau Claire, WI	0.8790
	Chippewa, WI.	
	Eau Claire, WI.	
2320	El Paso, TX	0.9346
	El Paso, TX.	
2330	Elkhart-Goshen, IN	0.9145
	Elkhart, IN.	
2335	Elmira, NY	0.8546
	Chemung, NY.	
2340	Enid, OK	0.8610
	Garfield, OK.	
2360	Erie, PA	0.8985
	Erie, PA.	
2400	Eugene-Springfield, OR.	1.0965
	Lane, OR.	
2440	Evansville-Henderson, IN–KY.	0.8173
	Posey, IN.	
	Vanderburgh, IN.	
	Warrick, IN.	
	Henderson, KY.	
2520	Fargo-Moorhead, ND–MN.	0.8749
	Clay, MN.	
	Cass, ND.	
2560	Fayetteville, NC	0.8655
	Cumberland, NC.	
2580	Fayetteville-Springdale-Rogers, AR.	0.7910
	Benton, AR.	
	Washington, AR.	
2620	Flagstaff, AZ–UT	1.0686
	Coconino, AZ.	

MSA	Urban area (Constituent counties)	Wage index
	Kane, UT.	
2640	Flint, MI	1.1205
	Genesee, MI.	
2650	Florence, AL	0.7616
	Colbert, AL.	
	Lauderdale, AL.	
2655	Florence, SC	0.8777
	Florence, SC.	
2670	Fort Collins-Loveland, CO.	1.0647
	Larimer, CO.	
2680	Ft. Lauderdale, FL	1.0121
	Broward, FL.	
2700	Fort Myers-Cape Coral, FL.	0.9247
	Lee, FL.	
2710	Fort Pierce-Port St. Lucie, FL.	0.9538
	Martin, FL.	
	St. Lucie, FL.	
2720	Fort Smith AR–OK	0.8052
	Crawford, AR.	
	Sebastian, AR.	
	Sequoyah, OK.	
2750	Fort Walton Beach, FL	0.9607
	Okaloosa, FL.	
2760	Fort Wayne, IN	0.8665
	Adams, IN.	
	Allen, IN.	
	De Kalb, IN.	
	Huntington, IN.	
	Wells, IN.	
	Whitley, IN.	
2800	Fort Worth-Arlington, TX.	0.9527
	Hood, TX.	
	Johnson, TX.	
	Parker, TX.	
	Tarrant, TX.	
2840	Fresno, CA	1.0104
	Fresno, CA.	
	Madera, CA.	
2880	Gadsden, AL	0.8423
	Etowah, AL.	
2900	Gainesville, FL	1.0074
	Alachua, FL.	
2920	Galveston-Texas City, TX.	0.9918
	Galveston, TX.	
2960	Gary, IN	0.9454
	Lake, IN.	
	Porter, IN.	
2975	Glens Falls, NY	0.8361
	Warren, NY.	
	Washington, NY.	
2980	Goldsboro, NC	0.8423
	Wayne, NC.	
2985	Grand Forks, ND–MN	0.8816
	Polk, MN.	
	Grand Forks, ND.	
2995	Grand Junction, CO	0.9109
	Mesa, CO.	
3000	Grand Rapids-Muskegon-Holland, MI.	1.0248
	Allegan, MI.	
	Kent, MI.	
	Muskegon, MI.	
	Ottawa, MI.	
3040	Great Falls, MT	0.9065
	Cascade, MT.	
3060	Greeley, CO	0.9814
	Weld, CO.	
3080	Green Bay, WI	0.9225
	Brown, WI.	
3120	Greensboro-Winston-Salem-High Point, NC.	0.9131
	Alamance, NC.	
	Davidson, NC.	
	Davie, NC.	
	Forsyth, NC.	
	Guilford, NC.	
	Randolph, NC.	
	Stokes, NC.	
	Yadkin, NC.	
3150	Greenville, NC	0.9384
	Pitt, NC.	
3160	Greenville-Spartanburg-Anderson, SC.	0.9003
	Anderson, SC.	
	Cherokee, SC.	
	Greenville, SC.	
	Pickens, SC.	
	Spartanburg, SC.	
3180	Hagerstown, MD	0.9409
	Washington, MD.	
3200	Hamilton-Middletown, OH.	0.9061
	Butler, OH.	
3240	Harrisburg-Lebanon-Carlisle, PA.	0.9386
	Cumberland, PA.	
	Dauphin, PA.	
	Lebanon, PA.	
	Perry, PA.	
3283	Hartford, CT	1.1373
	Hartford, CT.	
	Litchfield, CT.	
	Middlesex, CT.	
	Tolland, CT.	
3285	Hattiesburg, MS	0.7490
	Forrest, MS.	
	Lamar, MS.	
3290	Hickory-Morganton-Lenoir, NC.	0.9008
	Alexander, NC.	
	Burke, NC.	
	Caldwell, NC.	
	Catawba, NC.	
3320	Honolulu, HI	1.1863
	Honolulu, HI.	
3350	Houma, LA	0.8086
	Lafourche, LA.	
	Terrebonne, LA.	
3360	Houston, TX	0.9732
	Chambers, TX.	
	Fort Bend, TX.	
	Harris, TX.	
	Liberty, TX.	
	Montgomery, TX.	
	Waller, TX.	
3400	Huntington-Ashland, WV–KY–OH.	0.9876
	Boyd, KY.	
	Carter, KY.	
	Greenup, KY.	
	Lawrence, OH.	
	Cabell, WV.	
	Wayne, WV.	
3440	Huntsville, AL	0.8932
	Limestone, AL.	
	Madison, AL.	
3480	Indianapolis, IN	0.9787
	Boone, IN.	
	Hamilton, IN.	
	Hancock, IN.	
	Hendricks, IN.	
	Johnson, IN.	
	Madison, IN.	
	Marion, IN.	
	Morgan, IN.	
	Shelby, IN.	
3500	Iowa City, IA	0.9657
	Johnson, IA.	
3520	Jackson, MI	0.9134
	Jackson, MI.	
3560	Jackson, MS	0.8812
	Hinds, MS.	
	Madison, MS.	
	Rankin, MS.	
3580	Jackson, TN	0.8796
	Madison, TN.	
	Chester, TN.	
3600	Jacksonville, FL	0.9208
	Clay, FL.	
	Duval, FL.	
	Nassau, FL.	
	St. Johns, FL.	
3605	Jacksonville, NC	0.7777
	Onslow, NC.	
3610	Jamestown, NY	0.7818
	Chautauqua, NY.	
3620	Janesville-Beloit, WI	0.9585
	Rock, WI.	
3640	Jersey City, NJ	1.1502
	Hudson, NJ.	
3660	Johnson City-Kingsport-Bristol, TN–VA.	0.8272
	Carter, TN.	
	Hawkins, TN.	
	Sullivan, TN.	
	Unicoi, TN.	
	Washington, TN.	
	Bristol City, VA.	
	Scott, VA.	
	Washington, VA.	
3680	Johnstown, PA	0.8846
	Cambria, PA.	
	Somerset, PA.	
3700	Jonesboro, AR	0.7832
	Craighead, AR.	
3710	Joplin, MO	0.8148
	Jasper, MO.	
	Newton, MO.	
3720	Kalamazoo-Battle Creek, MI.	1.0453
	Calhoun, MI.	
	Kalamazoo, MI.	
	Van Buren, MI.	
3740	Kankakee, IL	0.9902
	Kankakee, IL.	
3760	Kansas City, KS-MO ...	0.9527
	Johnson, KS.	
	Leavenworth, KS.	
	Miami, KS.	
	Wyandotte, KS.	
	Cass, MO.	
	Clay, MO.	
	Clinton, MO.	
	Jackson, MO.	
	Lafayette, MO.	
	Platte, MO.	
	Ray, MO.	
3800	Kenosha, WI	0.9611
	Kenosha, WI.	
3810	Killeen-Temple, TX	1.0119
	Bell, TX.	

MSA	Urban area (Constituent counties)	Wage index
	Coryell, TX.	
3840	Knoxville, TN	0.8340
	Anderson, TN.	
	Blount, TN.	
	Knox, TN.	
	Loudon, TN.	
	Sevier, TN.	
	Union, TN.	
3850	Kokomo, IN	0.9518
	Howard, IN.	
	Tipton, IN.	
3870	La Crosse, WI-MN	0.9211
	Houston, MN.	
	La Crosse, WI.	
3880	Lafayette, LA	0.8490
	Acadia, LA.	
	Lafayette, LA.	
	St. Landry, LA.	
	St. Martin, LA.	
3920	Lafayette, IN	0.8834
	Clinton, IN.	
	Tippecanoe, IN.	
3960	Lake Charles, LA	0.7399
	Calcasieu, LA.	
3980	Lakeland-Winter Haven, FL.	0.9239
	Polk, FL.	
4000	Lancaster, PA	0.9259
	Lancaster, PA.	
4040	Lansing-East Lansing, MI.	0.9934
	Clinton, MI.	
	Eaton, MI.	
	Ingham, MI.	
4080	Laredo, TX	0.8168
	Webb, TX.	
4100	Las Cruces, NM	0.8658
	Dona Ana, NM.	
4120	Las Vegas, NV-AZ	1.0796
	Mohave, AZ.	
	Clark, NV.	
	Nye, NV.	
4150	Lawrence, KS	0.8190
	Douglas, KS.	
4200	Lawton, OK	0.8996
	Comanche, OK.	
4243	Lewiston-Auburn, ME ..	0.9036
	Androscoggin, ME.	
4280	Lexington, KY	0.8866
	Bourbon, KY.	
	Clark, KY.	
	Fayette, KY.	
	Jessamine, KY.	
	Madison, KY.	
	Scott, KY.	
	Woodford, KY.	
4320	Lima, OH	0.9320
	Allen, OH.	
	Auglaize, OH.	
4360	Lincoln, NE	0.9626
	Lancaster, NE.	
4400	Little Rock-North Little Rock, AR.	0.8906
	Faulkner, AR.	
	Lonoke, AR.	
	Pulaski, AR.	
	Saline, AR.	
4420	Longview-Marshall, TX	0.8922
	Gregg, TX.	
	Harrison, TX.	
	Upshur, TX.	
4480	Los Angeles-Long Beach, CA.	1.1996
	Los Angeles, CA.	
4520	Louisville, KY–IN	0.9350
	Clark, IN.	
	Floyd, IN.	
	Harrison, IN.	
	Scott, IN.	
	Bullitt, KY.	
	Jefferson, KY.	
	Oldham, KY.	
4600	Lubbock, TX	0.8838
	Lubbock, TX.	
4640	Lynchburg, VA	0.8867
	Amherst, VA.	
	Bedford, VA.	
	Bedford City, VA.	
	Campbell, VA.	
	Lynchburg City, VA.	
4680	Macon, GA	0.8974
	Bibb, GA.	
	Houston, GA.	
	Jones, GA.	
	Peach, GA.	
	Twiggs, GA.	
4720	Madison, WI	1.0271
	Dane, WI.	
4800	Mansfield, OH	0.8690
	Crawford, OH.	
	Richland, OH.	
4840	Mayaguez, PR	0.4589
	Anasco, PR.	
	Cabo Rojo, PR.	
	Hormigueros, PR.	
	Mayaguez, PR.	
	Sabana Grande, PR.	
	San German, PR.	
4880	McAllen-Edinburg-Mission, TX.	0.8566
	Hidalgo, TX.	
4890	Medford-Ashland, OR	1.0344
	Jackson, OR.	
4900	Melbourne-Titusville-Palm Bay, FL.	0.9688
	Brevard, Fl.	
4920	Memphis, TN–AR–MS	0.8723
	Crittenden, AR.	
	DeSoto, MS.	
	Fayette, TN.	
	Shelby, TN.	
	Tipton, TN.	
4940	Merced, CA	0.9646
	Merced, CA.	
5000	Miami, FL	1.0059
	Dade, FL.	
5015	Middlesex-Somerset-Hunterdon, NJ.	1.1075
	Hunterdon, NJ.	
	Middlesex, NJ.	
	Somerset, NJ.	
5080	Milwaukee-Waukesha, WI.	0.9767
	Milwaukee, WI.	
	Ozaukee, WI.	
	Washington, WI.	
	Waukesha, WI.	
5120	Minneapolis-St. Paul, MN–WI.	1.1017
	Anoka, MN.	
	Carver, MN.	
	Chisago, MN.	
	Dakota, MN.	
	Hennepin, MN.	
	Isanti, MN.	
	Ramsey, MN.	
	Scott, MN.	
	Sherburne, MN.	
	Washington, MN.	
	Wright, MN.	
	Pierce, WI.	
	St. Croix, WI.	
5140	Missoula, MT	0.9274
	Missoula, MT.	
5160	Mobile, AL	0.8163
	Baldwin, AL.	
	Mobile, AL.	
5170	Modesto, CA	1.0396
	Stanislaus, CA.	
5190	Monmouth-Ocean, NJ	1.1278
	Monmouth, NJ.	
	Ocean, NJ.	
5200	Monroe, LA	0.8396
	Ouachita, LA.	
5240	Montgomery, AL	0.7653
	Autauga, AL.	
	Elmore, AL.	
	Montgomery, AL.	
5280	Muncie, IN	1.0969
	Delaware, IN.	
5330	Myrtle Beach, SC	0.8440
	Horry, SC.	
5345	Naples, FL	0.9661
	Collier, FL.	
5360	Nashville, TN	0.9490
	Cheatham, TN.	
	Davidson, TN.	
	Dickson, TN.	
	Robertson, TN.	
	Rutherford TN.	
	Sumner, TN.	
	Williamson, TN.	
	Wilson, TN.	
5380	Nassau-Suffolk, NY	1.3932
	Nassau, NY.	
	Suffolk, NY.	
5483	New Haven-Bridgeport-Stamford-Waterbury-Danbury, CT.	1.2297
	Fairfield, CT.	
	New Haven, CT.	
5523	New London-Norwich, CT.	1.2063
	New London, CT.	
5560	New Orleans, LA	0.9295
	Jefferson, LA.	
	Orleans, LA.	
	Plaquemines, LA.	
	St. Bernard, LA.	
	St. Charles, LA.	
	St. James, LA.	
	St. John The Baptist, LA.	
	St. Tammany, LA.	
5600	New York, NY	1.4651
	Bronx, NY.	
	Kings, NY.	
	New York, NY.	
	Putnam, NY.	
	Queens, NY.	
	Richmond, NY.	
	Rockland, NY.	
	Westchester, NY.	
5640	Newark, NJ	1.1837
	Essex, NJ.	
	Morris, NJ.	
	Sussex, NJ.	
	Union, NJ.	

MSA	Urban area (Constituent counties)	Wage index
	Warren, NJ.	
5660	Newburgh, NY–PA	1.0847
	Orange, NY.	
	Pike, PA.	
5720	Norfolk-Virginia Beach-Newport News, VA–NC.	0.8412
	Currituck, NC.	
	Chesapeake City, VA.	
	Gloucester, VA.	
	Hampton City, VA.	
	Isle of Wight, VA.	
	James City, VA.	
	Mathews, VA.	
	Newport News City, VA.	
	Norfolk City, VA.	
	Poquoson City, VA.	
	Portsmouth City, VA.	
	Suffolk City, VA.	
	Virginia Beach City VA.	
	Williamsburg City, VA.	
	York, VA.	
5775	Oakland, CA	1.4983
	Alameda, CA.	
	Contra Costa, CA.	
5790	Ocala, FL	0.9243
	Marion, FL.	
5800	Odessa-Midland, TX ...	0.9205
	Ector, TX.	
	Midland, TX.	
5880	Oklahoma City, OK	0.8822
	Canadian, OK.	
	Cleveland, OK.	
	Logan, OK.	
	McClain, OK.	
	Oklahoma, OK.	
	Pottawatomie, OK.	
5910	Olympia, WA	1.0677
	Thurston, WA.	
5920	Omaha, NE–IA	0.9572
	Pottawattamie, IA.	
	Cass, NE.	
	Douglas, NE.	
	Sarpy, NE.	
	Washington, NE.	
5945	Orange County, CA	1.1467
	Orange, CA.	
5960	Orlando, FL	0.9610
	Lake, FL.	
	Orange, FL.	
	Osceola, FL.	
	Seminole, FL.	
5990	Owensboro, KY	0.8159
	Daviess, KY.	
6015	Panama City, FL	0.9010
	Bay, FL.	
6020	Parkersburg-Marietta, WV–OH.	0.8274
	Washington, OH.	
	Wood, WV.	
6080	Pensacola, FL	0.8176
	Escambia, FL.	
	Santa Rosa, FL.	
6120	Peoria-Pekin, IL	0.8645
	Peoria, IL.	
	Tazewell, IL.	
	Woodford, IL.	
6160	Philadelphia, PA–NJ ...	1.0937
	Burlington, NJ.	
	Camden, NJ.	
	Gloucester, NJ.	
	Salem, NJ.	
	Bucks, PA.	
	Chester, PA.	
	Delaware, PA.	
	Montgomery, PA.	
	Philadelphia, PA.	
6200	Phoenix-Mesa, AZ	0.9669
	Maricopa, AZ.	
	Pinal, AZ.	
6240	Pine Bluff, AR	0.7791
	Jefferson, AR.	
6280	Pittsburgh, PA	0.9741
	Allegheny, PA.	
	Beaver, PA.	
	Butler, PA.	
	Fayette, PA.	
	Washington, PA.	
	Westmoreland, PA.	
6323	Pittsfield, MA	1.0288
	Berkshire, MA.	
6340	Pocatello, ID	0.9076
	Bannock, ID.	
6360	Ponce, PR	0.5006
	Guayanilla, PR.	
	Juana Diaz, PR.	
	Penuelas, PR.	
	Ponce, PR.	
	Villalba, PR.	
	Yauco, PR.	
6403	Portland, ME	0.9748
	Cumberland, ME.	
	Sagadahoc, ME.	
	York, ME.	
6440	Portland-Vancouver, OR–WA.	1.0910
	Clackamas, OR.	
	Columbia, OR.	
	Multnomah, OR.	
	Washington, OR.	
	Yamhill, OR.	
	Clark, WA.	
6483	Providence-Warwick-Pawtucket, RI.	1.0864
	Bristol, RI.	
	Kent, RI.	
	Newport, RI.	
	Providence, RI.	
	Washington, RI.	
6520	Provo-Orem, UT	1.0029
	Utah, UT.	
6560	Pueblo, CO	0.8815
	Pueblo, CO.	
6580	Punta Gorda, FL	0.9613
	Charlotte, FL.	
6600	Racine, WI	0.9246
	Racine, WI.	
6640	Raleigh-Durham-Chapel Hill, NC.	0.9646
	Chatham, NC.	
	Durham, NC.	
	Franklin, NC.	
	Johnston, NC.	
	Orange, NC.	
	Wake, NC.	
6660	Rapid City, SD	0.8865
	Pennington, SD.	
6680	Reading, PA	0.9152
	Berks, PA.	
6690	Redding, CA	1.1664
	Shasta, CA.	
6720	Reno, NV	1.0550
	Washoe, NV.	
6740	Richland-Kennewick-Pasco, WA.	1.1460
	Benton, WA.	
	Franklin, WA.	
6760	Richmond-Petersburg, VA.	0.9617
	Charles City County, VA.	
	Chesterfield, VA.	
	Colonial Heights City, VA.	
	Dinwiddie, VA.	
	Goochland, VA.	
	Hanover, VA.	
	Henrico, VA.	
	Hopwell City, VA.	
	New Kent, VA.	
	Petersburg City, VA.	
	Powhatan, VA.	
	Prince George, VA.	
	Richmond City, VA.	
6780	Riverside-San Bernardino, CA.	1.1239
	Riverside, CA.	
	San Bernardino, CA.	
6800	Roanoke, VA	0.8750
	Botetourt, VA.	
	Roanoke, VA.	
	Roanoke City, VA.	
	Salem City, VA.	
6820	Rochester, MN	1.1315
	Olsted, MN.	
6840	Rochester, NY	0.9182
	Genesee, NY.	
	Livingston, NY.	
	Monroe, NY.	
	Ontario, NY.	
	Orleans NY.	
	Wayne, NY.	
6880	Rockford, IL	0.8819
	Boone, IL.	
	Ogle, IL.	
	Winnebago, IL.	
6895	Rocky Mount, NC	0.8849
	Edgecombe, NC.	
	Nash, NC.	
6920	Sacramento, CA	1.1950
	El Dorado, CA.	
	Placer, CA.	
	Sacramento, CA.	
6960	Saginaw-Bay City-Midland, MI.	0.9575
	Bay, MI.	
	Midland, MI.	
	Saginaw, MI.	
6980	St. Cloud, MN	1.0016
	Benton, MN.	
	Stearns, MN.	
7000	St. Joseph, MO	0.9071
	Andrew, MO.	
	Buchanan, MO.	
7040	St. Louis, MO-IL	0.9049
	Clinton, IL.	
	Jersey, IL.	
	Madison, IL.	
	Monroe, IL.	
	St. Clair, IL.	
	Franklin, MO.	
	Jefferson, MO.	
	Lincoln, MO.	
	St. Charles, MO.	
	St. Louis, MO.	
	St. Louis City, MO.	
	Warren, MO.	

MSA	Urban area (Constituent counties)	Wage index
7080	Salem, OR	1.0189
	Marion, OR.	
	Polk, OR.	
7120	Salinas, CA	1.4502
	Monterey, CA.	
7160	Salt Lake City-Ogden, UT.	0.9807
	Davis, UT.	
	Salt Lake, UT.	
	Weber, UT.	
7200	San Angelo, TX	0.8083
	Tom Green, TX.	
7240	San Antonio, TX	0.8580
	Bexar, TX.	
	Comal, TX.	
	Guadalupe, TX.	
	Wilson, TX.	
7320	San Diego, CA	1.1784
	San Diego, CA.	
7360	San Francisco, CA	1.4156
	Marin, CA.	
	San Francisco, CA.	
	San Mateo, CA.	
7400	San Jose, CA	1.3656
	Santa Clara, CA.	
7440	San Juan-Bayamon, PR.	0.4690
	Aguas Buenas, PR.	
	Barceloneta, PR.	
	Bayamon, PR.	
	Canovanas, PR.	
	Carolina, PR.	
	Catano, PR.	
	Ceiba, PR.	
	Comerio, PR.	
	Corozal, PR.	
	Dorado, PR.	
	Fajardo, PR.	
	Florida, PR.	
	Guaynabo, PR.	
	Humacao, PR.	
	Juncos, PR.	
	Los Piedras, PR.	
	Loiza, PR.	
	Luguillo, PR.	
	Manati, PR.	
	Morovis, PR.	
	Naguabo, PR.	
	Naranjito, PR.	
	Rio Grande, PR.	
	San Juan, PR.	
	Toa Alta, PR.	
	Toa Baja, PR.	
	Trujillo Alto, PR.	
	Vega Alta, PR.	
	Vega Baja, PR.	
	Yabucoa, PR.	
7460	San Luis Obispo-Atascadero-Paso Robles, CA.	1.0673
	San Luis Obispo, CA.	
7480	Santa Barbara-Santa Maria-Lompoc, CA.	1.0597
	Santa Barbara, CA.	
7485	Santa Cruz-Watsonville, CA.	1.4040
	Santa Cruz, CA.	
7490	Santa Fe, NM	1.0537
	Los Alamos, NM.	
	Santa Fe, NM.	
7500	Santa Rosa, CA	1.2646
	Sonoma, CA.	
7510	Sarasota-Bradenton, FL.	0.9809
	Manatee, FL.	
	Sarasota, FL.	
7520	Savannah, GA	0.9697
	Bryan, GA.	
	Chatham, GA.	
	Effingham, GA.	
7560	Scranton-Wilkes-Barre-Hazleton, PA.	0.8421
	Columbia, PA.	
	Lackawanna, PA.	
	Luzerne, PA.	
	Wyoming, PA.	
7600	Seattle-Bellevue-Everett, WA.	1.0996
	Island, WA.	
	King, WA.	
	Snohomish, WA.	
7610	Sharon, PA	0.7928
	Mercer, PA.	
7620	Sheboygan, WI	0.8379
	Sheboygan, WI.	
7640	Sherman-Denison, TX	0.8694
	Grayson, TX.	
7680	Shreveport-Bossier City, LA.	0.8750
	Bossier, LA.	
	Caddo, LA.	
	Webster, LA.	
7720	Sioux City, IA–NE	0.8473
	Woodbury, IA.	
	Dakota, NE.	
7760	Sioux Falls, SD	0.8790
	Lincoln, SD.	
	Minnehaha, SD.	
7800	South Bend, IN	1.0000
	St. Joseph, IN.	
7840	Spokane, WA	1.0513
	Spokane, WA.	
7880	Springfield, IL	0.8685
	Menard, IL.	
	Sangamon, IL.	
7920	Springfield, MO	0.8488
	Christian, MO.	
	Greene, MO.	
	Webster, MO.	
8003	Springfield, MA	1.0637
	Hampden, MA.	
	Hampshire, MA.	
8050	State College, PA	0.9038
	Centre, PA.	
8080	Steubenville-Weirton, OH–WV.	0.8548
	Jefferson, OH.	
	Brooke, WV.	
	Hancock, WV.	
8120	Stockton-Lodi, CA	1.0629
	San Joaquin, CA.	
8140	Sumter, SC	0.8271
	Sumter, SC.	
8160	Syracuse, NY	0.9549
	Cayuga, NY.	
	Madison, NY.	
	Onondaga, NY.	
	Oswego, NY.	
8200	Tacoma, WA	1.1564
	Pierce, WA.	
8240	Tallahassee, FL	0.8545
	Gadsden, FL.	
	Leon, FL.	
8280	Tampa-St. Petersburg-Clearwater, FL.	0.8982
	Hernando, FL.	
	Hillsborough, FL.	
	Pasco, FL.	
	Pinellas, FL.	
8320	Terre Haute, IN	0.8304
	Clay, IN.	
	Vermillion, IN.	
	Vigo, IN.	
8360	Texarkana, AR-	0.8363
	Texarkana, TX	
	Miller, AR.	
	Bowie, TX.	
8400	Toledo, OH	0.9832
	Fulton, OH.	
	Lucas, OH.	
	Wood, OH.	
8440	Topeka, KS	0.9117
	Shawnee, KS.	
8480	Trenton, NJ	1.0137
	Mercer, NJ.	
8520	Tucson, AZ	0.8794
	Pima, AZ.	
8560	Tulsa, OK	0.8454
	Creek, OK.	
	Osage, OK.	
	Rogers, OK.	
	Tulsa, OK.	
	Wagoner, OK.	
8600	Tuscaloosa, AL	0.8064
	Tuscaloosa, AL.	
8640	Tyler, TX	0.9404
	Smith, TX.	
8680	Utica-Rome, NY	0.8560
	Herkimer, NY.	
	Oneida, NY.	
8720	Vallejo-Fairfield-Napa, CA.	1.2847
	Napa, CA	1.1030
	Solano, CA.	
8735	Ventura, CA.	
	Ventura, CA.	
8750	Victoria, TX	0.8154
	Victoria, TX.	
8760	Vineland-Millville-Bridgeton, NJ.	1.0501
	Cumberland, NJ.	
8780	Visalia-Tulare-Porterville, CA.	0.9551
	Tulare, CA.	
8800	Waco, TX	0.8314
	McLennan, TX.	
8840	Washington, DC-MD-VA-WV.	1.0755
	District of Columbia, DC.	
	Calvert, MD.	
	Charles, MD.	
	Frederick, MD.	
	Montgomery, MD.	
	Prince Georges, MD.	
	Alexandria City, VA.	
	Arlington, VA.	
	Clarke, VA.	
	Culpeper, VA.	
	Fairfax, VA.	
	Fairfax City, VA.	
	Falls Church City, VA.	
	Fauquier, VA.	
	Fredericksburg City, VA.	
	King George, VA.	
	Loudoun, VA.	
	Manassas City, VA.	
	Manassas Park City, VA.	

MSA	Urban area (Constituent counties)	Wage index
	Prince William, VA.	
	Spotsylvania, VA.	
	Stafford, VA.	
	Warren, VA.	
	Berkeley, WV.	
	Jefferson, WV.	
8920	Waterloo-Cedar Falls, IA.	0.8404
	Black Hawk, IA.	
8940	Wausau, WI	0.9418
	Marathon, WI.	
8960	West Palm Beach-Boca Raton, FL.	0.9682
	Palm Beach, FL.	
9000	Wheeling, WV-OH	0.7733
	Belmont, OH.	
	Marshall, WV.	
	Ohio, WV.	
9040	Wichita, KS	0.9544
	Butler, KS.	
	Harvey, KS.	
	Sedgwick, KS.	
9080	Wichita Falls, TX	0.7668
	Archer, TX.	
	Wichita, TX.	
9140	Williamsp;port, PA	0.8392
	Lycoming, PA.	
9160	Wilmington-Newark, DE-MD.	1.1191
	New Castle, DE.	
	Cecil, MD.	
9200	Wilmington, NC	0.9402
	New Hanover, NC.	
	Brunswick, NC.	
9260	Yakima, WA	0.9907
	Yakima, WA.	
9270	Yolo, CA	1.0199
	Yolo, CA.	
9280	York, PA	0.9264
	York, PA.	
9320	Youngstown-Warren, OH.	0.9543
	Columbiana, OH.	
	Mahoning, OH.	
	Trumbull, OH.	
9340	Yuba City, CA	1.0706
	Sutter, CA.	
	Yuba, CA.	
9360	Yuma, AZ	0.9529
	Yuma, AZ.	

Dated: June 28, 2001.

Brian P. Burns,

Deputy Assistant Secretary for Information Resources Management.

[FR Doc. 01–16724 Filed 6–28–01; 3:13 pm]

BILLING CODE 4120–01–P

DEPARTMENT OF HEALTH AND HUMAN SERVICES

Health Care Financing Administration

[HCFA–3073–N]

Medicare Program; Town Hall Meeting on Physician Query Forms

AGENCY: Centers for Medicare and Medicaid Services (CMS), HHS.

ACTION: Notice of meeting.

SUMMARY: This notice announces a Town Hall meeting to discuss the use of coding summary forms (in this case, physician query forms) when the record is reviewed by a Peer Review Organization (PRO) to validate DRG coding. Physicians, providers, coding specialists, medical records staff, quality improvement professionals, and other interested parties are invited to this meeting to present their individual views on physician query forms. The opinions and alternatives provided during this meeting will assist us as we evaluate our policy on the use of physician query forms by PROs in verifying hospital coding. The meeting is open to the public, but attendance is limited to space available.

DATES: *Meeting Date:* The Town Hall meeting announced in this notice will be held on Friday, July 27, 2001, from 1:30 p.m. to 5:00 p.m. (Eastern Standard Time).

ADDRESSES: The Town Hall meeting will be held in the main auditorium of the Centers for Medicare and Medicaid Services building, 7500 Security Boulevard, Baltimore, MD 21244.

Written Questions or Statements: Any interested party may send written comments by mail, fax, or electronically. We will accept written testimony, questions, or other statements, not to exceed (4) single-spaced, typed pages, before the meeting, and up until August 10, 2001. Send written testimony, questions or other statements to: Sheila Blackstock, Quality Improvement Group, Office of Clinical Standards and Quality, Centers for Medicare and Medicaid Services, S3–021–01, 7500 Security Boulevard, Baltimore, Maryland 21244–1850.

FOR FURTHER INFORMATION CONTACT: Sheila Blackstock, (410) 786–3502 or Lana Reed, (410) 786–6875. You may also send inquiries about this meeting via email to *www.querymtg@hcfa.gov.*

SUPPLEMENTARY INFORMATION:

I. Background

Section 1866(a)(1)(F) of the Social Security Act and 42 CFR Part 476.71(a) require PROs to perform a number of review activities, including DRG validation review of inpatient hospital prospective payment system cases to make determinations as appropriate, in accordance with the terms of their contracts.

Section 4130 of the PRO Manual directs PROs to:

- Review medical records to ensure that the record and the information on the claim submitted by the hospital agree;
- Base DRG validation upon accepted principles of coding practice; and
- Verify a hospital's coding in accordance with the coding principles reflected in the current edition of the ICD–9–CM coding manual.

In January, 2001, we issued a policy memorandum to PROs directing them not to accept coding summary forms (physician query forms) as documentation in the medical record following DRG validation procedures specified in section 4130 of the PRO Manual. While this memorandum did not mandate an outright prohibition of the use of summary forms, it did prohibit PROs from using coding summary forms *as a substitute for documentation in the medical record.*

The policy memorandum generated a high level of public interest. Subsequently, we recognized that there are varied interpretations of what constitutes proper supplemental usage of coding summary forms. As a result, in March 2001, we issued a second policy memorandum that suspended implementation of the January 2001 memorandum until October 1, 2001. We now seek individual input from interested parties so that it may be considered as we re-evaluate this policy.

II. Meeting Format

The initial portion of the meeting will be a presentation of our policy and our concerns with the use of physician query forms. The remainder of the meeting will be reserved for individual statements from interested parties.

Time for participants to make a statement will be limited according to the number of registered participants. Therefore, individuals who wish to make a statement must contact the individuals identified in **FOR FURTHER INFORMATION**, above, as soon as possible to sign up to make a statement. Participants will be permitted to speak in the order in which they sign up. Comments from individuals not registered to speak will be heard after scheduled statements only if time permits.

Written submissions will also be accepted.

III. Registration Instructions

The Office of Clinical Standards and Quality is coordinating meeting registration. While there is no registration fee, individuals must register to attend. You may register by sending a fax to the attention of Lana Reed or Sheila Blackstock. The fax number is (410) 786–8532. Please include your name, address, telephone number, and, if available, email address and fax number. You will receive a

registration confirmation with instructions for your arrival at the CMS complex. If seating capacity has been reached, you will be notified that the meeting has reached capacity.

Authority: Sec. 1871 of the Social Security Act (42 U.S.C. 1395hh).

(Catalog of Federal Domestic Assistance Program No. 93.773 Medicare—Hospital Insurance Program; and Program No. 93.778, Medical Assistance Program)

Dated: June 28, 2001.

Thomas A. Scully,

Administrator, Health Care Financing Administration.

[FR Doc. 01–16744 Filed 7–2–01; 8:45 am]

BILLING CODE 4120–01–P

DEPARTMENT OF HEALTH AND HUMAN SERVICES

Substance Abuse and Mental Health Services Administration

Current List of Laboratories Which Meet Minimum Standards To Engage in Urine Drug Testing for Federal Agencies

AGENCY: Substance Abuse and Mental Health Services Administration, HHS.

ACTION: Notice.

SUMMARY: The Department of Health and Human Services notifies Federal agencies of the laboratories currently certified to meet standards of Subpart C of Mandatory Guidelines for Federal Workplace Drug Testing Programs (59 FR 29916, 29925). A similar notice listing all currently certified laboratories will be published during the first week of each month, and updated to include laboratories which subsequently apply for and complete the certification process. If any listed laboratory's certification is totally suspended or revoked, the laboratory will be omitted from updated lists until such time as it is restored to full certification under the Guidelines.

If any laboratory has withdrawn from the National Laboratory Certification Program during the past month, it will be listed at the end, and will be omitted from the monthly listing thereafter.

This Notice is also available on the internet at the following website: *http://www.health.org/workplace*

FOR FURTHER INFORMATION CONTACT: Mrs. Giselle Hersh or Dr. Walter Vogl, Division of Workplace Programs, 5600 Fishers Lane, Rockwall 2 Building, Room 815, Rockville, Maryland 20857; Tel.: (301) 443–6014, Fax: (301) 443–3031.

SUPPLEMENTARY INFORMATION: Mandatory Guidelines for Federal Workplace Drug Testing were developed in accordance with Executive Order 12564 and section 503 of Pub. L. 100–71. Subpart C of the Guidelines, ''Certification of Laboratories Engaged in Urine Drug Testing for Federal Agencies,'' sets strict standards which laboratories must meet in order to conduct urine drug testing for Federal agencies. To become certified an applicant laboratory must undergo three rounds of performance testing plus an on-site inspection.

To maintain that certification a laboratory must participate in a quarterly performance testing program plus periodic, on-site inspections.

Laboratories which claim to be in the applicant stage of certification are not to be considered as meeting the minimum requirements expressed in the HHS Guidelines. A laboratory must have its letter of certification from SAMHSA, HHS (formerly: HHS/NIDA) which attests that it has met minimum standards.

In accordance with Subpart C of the Guidelines, the following laboratories meet the minimum standards set forth in the Guidelines:

ACL Laboratories 8901 W. Lincoln Ave., West Allis, WI 53227, 414–328–7840/800–877–7016 (Formerly: Bayshore Clinical Laboratory)

Advanced Toxicology Network, 3560 Air Center Cove, Suite 101, Memphis, TN 38118, 901–794–5770/888–290–1150

Aegis Analytical Laboratories, Inc., 345 Hill Ave., Nashville, TN 37210, 615–255–2400

Alabama Reference Laboratories, Inc., 543 South Hull St., Montgomery, AL 36103, 800–541–4931/334–263–5745

Alliance Laboratory Services, 3200 Burnet Ave., Cincinnati, OH 45229, 513–585–9000 (Formerly: Jewish Hospital of Cincinnati, Inc.)

American Medical Laboratories, Inc., 14225 Newbrook Dr., Chantilly, VA 20151, 703–802–6900

Associated Pathologists Laboratories, Inc., 4230 South Burnham Ave., Suite 250, Las Vegas, NV 89119–5412, 702–733–7866/800–433–2750

Baptist Medical Center—Toxicology Laboratory, 9601 I–630, Exit 7, Little Rock, AR 72205–7299, 501–202–2783 (Formerly: Forensic Toxicology Laboratory Baptist Medical Center)

Clinical Laboratory Partners, LLC, 129 East Cedar St., Newington, CT 06111, 860–696–8115 (Formerly: Hartford Hospital Toxicology Laboratory)

Clinical Reference Lab, 8433 Quivira Rd., Lenexa, KS 66215–2802, 800–445–6917

Cox Health Systems, Department of Toxicology, 1423 North Jefferson Ave., Springfield, MO 65802, 800–876–3652/417–269–3093 (Formerly: Cox Medical Centers)

Dept. of the Navy, Navy Drug Screening Laboratory, Great Lakes, IL, Building 38–H, P. O. Box 88–6819, Great Lakes, IL 60088–6819, 847–688–2045/847–688–4171

Diagnostic Services Inc., dba DSI 12700 Westlinks Drive, Fort Myers, FL 33913, 941–561–8200/800–735–5416

Doctors Laboratory, Inc., P.O. Box 2658, 2906 Julia Dr., Valdosta, GA 31602, 912–244–4468

DrugProof, Division of Dynacare/Laboratory of Pathology, LLC, 1229 Madison St., Suite 500, Nordstrom Medical Tower, Seattle, WA 98104, 206–386–2672/800–898–0180 (Formerly: Laboratory of Pathology of Seattle, Inc., DrugProof, Division of Laboratory of Pathology of Seattle, Inc.)

DrugScan, Inc., P.O. Box 2969, 1119 Mearns Rd., Warminster, PA 18974, 215–674–9310

Dynacare Kasper Medical Laboratories,* 14940–123 Ave., Edmonton, Alberta, Canada T5V 1B4, 780–451–3702/800–661–9876

ElSohly Laboratories, Inc., 5 Industrial Park Dr., Oxford, MS 38655, 662–236–2609

Express Analytical Labs, 1301 18th Ave NW, Suite 110, Austin, MN 55912, 507–437–7322

Gamma-Dynacare Medical Laboratories,* A Division of the Gamma-Dynacare Laboratory Partnership, 245 Pall Mall St., London, ONT, Canada N6A 1P4, 519–679–1630

General Medical Laboratories, 36 South Brooks St., Madison, WI 53715, 608–267–6267

Integrated Regional Laboratories, 5361 NW 33rd Avenue, Fort Lauderdale, FL 33309, 954–777–0018, 800–522–0232 (Formerly: Cedars Medical Center, Department of Pathology)

Kroll Laboratory Specialists, Inc., 1111 Newton St., Gretna, LA 70053, 504–361–8989/800–433–3823 (Formerly: Laboratory Specialists, Inc.)

LabOne, Inc., 10101 Renner Blvd., Lenexa, KS 66219, 913–888–3927/800–728–4064 (Formerly: Center for Laboratory Services, a Division of LabOne, Inc.)

Laboratory Corporation of America Holdings, 7207 N. Gessner Road, Houston, TX 77040, 713–856–8288/800–800–2387

Laboratory Corporation of America Holdings, 69 First Ave., Raritan, NJ 08869, 908–526–2400/800–437–4986 (Formerly: Roche Biomedical Laboratories, Inc.)

Laboratory Corporation of America Holdings, 1904 Alexander Drive,

Research Triangle Park, NC 27709, 919–572–6900/800–833–3984 (Formerly: LabCorp Occupational Testing Services, Inc., CompuChem Laboratories, Inc.; CompuChem Laboratories, Inc., A Subsidiary of Roche Biomedical Laboratory; Roche CompuChem Laboratories, Inc., A Member of the Roche Group)

Laboratory Corporation of America Holdings, 10788 Roselle Street, San Diego, CA 92121, 800–882–7272 (Formerly: Poisonlab, Inc.)

Laboratory Corporation of America Holdings, 1120 Stateline Road West, Southaven, MS 38671, 866–827–8042/800–233–6339 (Formerly: LabCorp Occupational Testing Services, Inc., MedExpress/National Laboratory Center)

Marshfield Laboratories, Forensic Toxicology Laboratory, 1000 North Oak Ave., Marshfield, WI 54449, 715–389–3734/800–331–3734

MAXXAM Analytics Inc.,* 5540 McAdam Rd., Mississauga, ON, Canada L4Z 1P1, 905–890–2555 (Formerly: NOVAMANN (Ontario) Inc.)

Medical College Hospitals Toxicology Laboratory, Department of Pathology, 3000 Arlington Ave., Toledo, OH 43699, 419–383–5213

MedTox Laboratories, Inc., 402 W. County Rd. D, St. Paul, MN 55112, 651–636–7466/800–832–3244

MetroLab-Legacy Laboratory Services, 1225 NE 2nd Ave., Portland, OR 97232, 503–413–5295/800–950–5295

Minneapolis Veterans Affairs Medical Center, Forensic Toxicology Laboratory, 1 Veterans Drive, Minneapolis, Minnesota 55417, 612–725–2088

National Toxicology Laboratories, Inc., 1100 California Ave., Bakersfield, CA 93304, 661–322–4250/800–350–3515

Northwest Drug Testing, a division of NWT Inc., 1141 E. 3900 South, Salt Lake City, UT 84124, 801–293–2300/800–322–3361 (Formerly: NWT Drug Testing, NorthWest Toxicology, Inc.)

One Source Toxicology Laboratory, Inc., 1705 Center Street, Deer Park, TX 77536, 713–920–2559 (Formerly: University of Texas Medical Branch, Clinical Chemistry Division; UTMB Pathology-Toxicology Laboratory)

Oregon Medical Laboratories, P.O. Box 972, 722 East 11th Ave., Eugene, OR 97440–0972, 541–687–2134

Pacific Toxicology Laboratories, 6160 Variel Ave., Woodland Hills, CA 91367, 818–598–3110/800–328–6942 (Formerly: Centinela Hospital Airport Toxicology Laboratory

Pathology Associates Medical Laboratories, 11604 E. Indiana Ave., Spokane, WA 99206, 509–926–2400/800–541–7891

PharmChem Laboratories, Inc., Texas Division, 7606 Pebble Dr., Fort Worth, TX 76118, 817–215–8800 (Formerly: Harris Medical Laboratory)

Physicians Reference Laboratory, 7800 West 110th St., Overland Park, KS 66210, 913–339–0372/800–821–3627

Quest Diagnostics Incorporated, 3175 Presidential Dr., Atlanta, GA 30340, 770–452–1590 (Formerly: SmithKline Beecham Clinical Laboratories, SmithKline Bio-Science Laboratories)

Quest Diagnostics Incorporated, 4444 Giddings Road, Auburn Hills, MI 48326, 248–373–9120/800–444–0106 (Formerly: HealthCare/Preferred Laboratories, HealthCare/MetPath, CORNING Clinical Laboratories)

Quest Diagnostics Incorporated, 4770 Regent Blvd., Irving, TX 75063, 800–842–6152 (Moved from the Dallas location on 03/31/01; Formerly: SmithKline Beecham Clinical Laboratories, SmithKline Bio-Science Laboratories)

Quest Diagnostics Incorporated, 801 East Dixie Ave., Suite 105A, Leesburg, FL 34748, 352–787–9006x4343 (Formerly: SmithKline Beecham Clinical Laboratories, Doctors & Physicians Laboratory)

Quest Diagnostics Incorporated, 400 Egypt Rd., Norristown, PA 19403, 610–631–4600/800–877–7484 (Formerly: SmithKline Beecham Clinical Laboratories, SmithKline Bio-Science Laboratories)

Quest Diagnostics Incorporated, 506 E. State Pkwy., Schaumburg, IL 60173, 800–669–6995/847–885–2010 (Formerly: SmithKline Beecham Clinical Laboratories, International Toxicology Laboratories)

Quest Diagnostics Incorporated, 7470 Mission Valley Rd., San Diego, CA 92108–4406, 619–686–3200/800–446–4728 (Formerly: Nichols Institute, Nichols Institute Substance Abuse Testing (NISAT), CORNING Nichols Institute, CORNING Clinical Laboratories)

Quest Diagnostics Incorporated, One Malcolm Ave., Teterboro, NJ 07608, 201–393–5590 (Formerly: MetPath, Inc., CORNING MetPath Clinical Laboratories, CORNING Clinical Laboratory)

Quest Diagnostics Incorporated, 7600 Tyrone Ave., Van Nuys, CA 91405, 818–989–2520/800–877–2520 (Formerly: SmithKline Beecham Clinical Laboratories)

Scientific Testing Laboratories, Inc., 463 Southlake Blvd., Richmond, VA 23236, 804–378–9130

S.E.D. Medical Laboratories, 5601 Office Blvd., Albuquerque, NM 87109, 505–727–6300/800–999–5227

South Bend Medical Foundation, Inc., 530 N. Lafayette Blvd., South Bend, IN 46601, 219–234–4176

Southwest Laboratories, 2727 W. Baseline Rd., Tempe, AZ 85283, 602–438–8507/800–279–0027

Sparrow Health System, Toxicology Testing Center, St. Lawrence Campus, 1210 W. Saginaw, Lansing, MI 48915, 517–377–0520 (Formerly: St. Lawrence Hospital & Healthcare System)

St. Anthony Hospital Toxicology Laboratory, 1000 N. Lee St., Oklahoma City, OK 73101, 405–272–7052

Toxicology & Drug Monitoring Laboratory, University of Missouri Hospital & Clinics, 2703 Clark Lane, Suite B, Lower Level, Columbia, MO 65202, 573–882–1273

Toxicology Testing Service, Inc., 5426 N.W. 79th Ave., Miami, FL 33166, 305–593–2260

Universal Toxicology Laboratories, LLC, 9930 W. Highway 80, Midland, TX 79706, 915–561–8851/888–953–8851

*The Standards Council of Canada (SCC) voted to end its Laboratory Accreditation Program for Substance Abuse (LAPSA) effective May 12, 1998. Laboratories certified through that program were accredited to conduct forensic urine drug testing as required by U.S. Department of Transportation (DOT) regulations. As of that date, the certification of those accredited Canadian laboratories will continue under DOT authority. The responsibility for conducting quarterly performance testing plus periodic on-site inspections of those LAPSA-accredited laboratories was transferred to the U.S. DHHS, with the DHHS' National Laboratory Certification Program (NLCP) contractor continuing to have an active role in the performance testing and laboratory inspection processes. Other Canadian laboratories wishing to be considered for the NLCP may apply directly to the NLCP contractor just as U.S. laboratories do.

Upon finding a Canadian laboratory to be qualified, the DHHS will recommend that DOT certify the laboratory (**Federal Register**, 16 July 1996) as meeting the minimum standards of the ''Mandatory Guidelines for Workplace Drug Testing'' (59 **Federal Register**, 9 June 1994, Pages 29908–29931). After receiving the DOT certification, the laboratory will be included in the monthly list of DHHS certified laboratories and participate in the NLCP certification maintenance program.

Richard Kopanda,
Executive Officer, Substance Abuse and Mental Health Services Administration.

[FR Doc. 01–16657 Filed 7–2–01; 8:45 am]

BILLING CODE 4160–20–P

DEPARTMENT OF HEALTH AND HUMAN SERVICES

Substance Abuse and Mental Health Services Administration

Fiscal Year (FY) 2001 Funding Opportunities

AGENCY: Substance Abuse and Mental Health Services Administration (SAMHSA), HHS.

ACTION: Reissued Notice of Funding Availability.

SUMMARY: The Substance Abuse and Mental Health Services Administration (SAMHSA) Center for Mental Health Services (CMHS) is reissuing the announcement of the availability of FY 2001 funds for grants for the following activity. This announcement changes the submission date to August 10, changes the address to which applications must be submitted, changes eligibility requirements, and adds the requirement for letters of support. This notice is not a complete description of the activity; potential applicants must obtain a copy of the Guidance for Applicants (GFA), including Part I, Cooperative Agreement for a Technical Assistance Center for Statewide Family Networks (short title: Statewide Networks Technical Assistance), and Part II, General Policies and Procedures Applicable to all SAMHSA Applications for Discretionary Grants and Cooperative Agreements, before preparing and submitting an application.

Activity	Application deadline	Est. Funds FY 2001	Est. No. of Awards	Project period
Statewide Family Networks Technical Assistance Center	August 10, 2001	$300–600,000	One	3 years.

The actual amount available for the award may vary, depending on unanticipated program requirements and the number and quality of applications received. FY 2001 funds for the activity discussed in this announcement were appropriated by the Congress under Public Law No. 106–310. SAMHSA's policies and procedures for peer review and Advisory Council review of grant and cooperative agreement application were published in the **Federal Register** (Vol. 58, No. 126) on July 2, 1993.

GENERAL INSTRUCTIONS: Applicants must use application form PHS 5161–1 (Rev. 7/00). The application kit contains the two-part application materials (complete programmatic guidance and instructions for preparing and submitting applications), the PHS 5161–1 which includes Standard Form 424 (Face Page), and other documentation and forms. Application kits may be obtained from: National Mental Health Services Knowledge Exchange Network (KEN), P.O. Box 42490, Washington, DC 20015, Telephone: 1–800–789–2647.

The PHS 5161–1 application form and the full text of the activity are also available electronically via SAMHSA's World Wide Web Home Page: *http://www.samhsa.gov.*

When requesting an application kit, the applicant must specify the particular activity for which detailed information is desired. All information necessary to apply, including where to submit applications and application deadline instructions, are included in the application kit.

Purpose: The Substance Abuse and Mental Health Services Administration (SAMHSA) Center for Mental Health Services (CMHS) announces the availability of Fiscal Year 2001 funds for implementing a cooperative agreement for a Technical Assistance Center for Statewide Family Networks. The Technical Assistance Center will serve Networks receiving a grant under SAMHSA GFA No. SM01–004. The purpose of the Technical Assistance Center is to provide training, mentoring by peers in the field, help with problem solving, a communications link for the Center for Mental Health Services to the grantees, and logistical arrangements for a mandatory annual technical assistance meeting.

Eligibility: Nonprofit private entities that meet all of the following requirements are eligible to apply:

(1) nonprofit private entities that have a board of directors comprise of no less than 25 to 51 percent family members whose children, youth, or adolescents have a serious emotional, behavioral, or mental disorder. This may include youth members serving as part of the board of directors.

(2) The entities organizational mission and scope of work must solely focus on families whose children, youth, and adolescents age 18 and under or 21 and under if served by an Individual Education Plan (IEP); with serious emotional, behavioral, or mental disorder.

Availability of Funds: Approximately $300,000 to $600,000 will be available for one award. Actual funding levels will depend upon the availability of funds.

Period of Support: The project period is three years. Annual continuation awards will be made subject to continued availability of funds and progress achieved.

Criteria for Review and Funding:

General Review Criteria: Competing applications requesting funding under this activity will be reviewed for technical merit in accordance with established PHS/SAMHSA peer review procedures. Review criteria that will be used by the peer review groups are specified in the application guidance material.

Award Criteria for Scored Applications: Applications will be considered for funding on the basis of their overall technical merit as determined through the peer review group and the appropriate National Advisory Council review process.

Availability of funds will also be an award criteria.

Additional award criteria specific to the programmatic activity may be included in the application guidance materials.

Catalog of Federal Domestic Assistance Number: 93.230.

Program Contact: For questions concerning program issues: Elizabeth Sweet, M.Ed. and Gary DeCarolis, M.Ed., Child, Adolescent, and Family Branch, Center for Mental Health Services, Substance Abuse and Mental

Health Services Administration, 5600 Fishers Lane, Room 11C–16, Rockville, MD 20857, (301) 443–1333, E-Mail: *esweet@samhsa.gov*, *gdecarol@samhsa.gov*

Questions on grants management issues should be directed to: Steve Hudak, Division of Grants Management, OPS, Substance Abuse and Mental Health Services Administration, 5600 Fishers Lane, Room 13–103, Rockville, MD 20857, (301) 443–4456, E-Mail: shudak@samhsa.gov

Public Health Grants Management System Reporting Requirements: The Public Health System Impact Statement (PHSIS) is intended to keep State and local health officials apprised of proposed health services grant and cooperative agreement applications submitted by community-based nongovernmental organizations within their jurisdictions.

Community-based nongovernmental service providers who are not transmitting their applications through the State must submit a PHSIS to the head(s) of the appropriate State and local health agencies in the area(s) to be affected not later than the pertinent receipt date for applications. This PHSIS consists of the following information:

a. A copy of the face page of the application (Standard form 424).

b. A summary of the project (PHSIS), not to exceed one page, which provides:

(1) A description of the population to be served.

(2) A summary of the services to be provided.

(3) A description of the coordination planned with the appropriate State or local health agencies.

State and local governments and Indian Tribal Authority applicants are not subject to the Public Health System Reporting Requirements. Application guidance materials will specify if a particular FY 2001 activity is subject to the Public Health System Reporting Requirements.

PHS Non-use of Tobacco Policy Statement: The PHS strongly encourages all grant and contract recipients to provide a smoke-free workplace and promote the non-use of all tobacco products. In addition, Public Law 103–227, the Pro-Children Act of 1994, prohibits smoking in certain facilities (or in some cases, any portion of a facility) in which regular or routine education, library, day care, health care, or early childhood development services are provided to children. This is consistent with the PHS mission to protect and advance the physical and mental health of the American people.

Executive Order 12372: Applications submitted in response to the FY 2001 activity listed above are subject to the intergovernmental review requirements of Executive Order 12372, as implemented through DHHS regulations at 45 CFR Part 100. E.O. 12372 sets up a system for State and local government review of applications for Federal financial assistance. Applicants (other than Federally recognized Indian tribal governments) should contact the State's Single Point of Contact (SPOC) as early as possible to alert them to the prospective application(s) and to receive any necessary instructions on the State's review process.

For proposed projects serving more than one State, the applicant is advised to contact the SPOC of each affected State. A current listing of SPOCs is included in the application guidance materials. The SPOC should send any State review process recommendations directly to: Division of Extramural Activities, Policy, and Review, Substance Abuse and Mental Health Services Administration, Parklawn Building, Room 17–89, 5600 Fishers Lane, Rockville, Maryland 20857.

The due date for State review process recommendations is no later than 60 days after the specified deadline date for the receipt of applications. SAMHSA does not guarantee to accommodate or explain SPOC comments that are received after the 60-day cut-off.

Dated: June 25, 2001.

Richard Kopanda,

Executive Officer, SAMHSA.

[FR Doc. 01–16620 Filed 7–2–01; 8:45 am]

BILLING CODE 4162–20–P

DEPARTMENT OF THE INTERIOR

Fish and Wildlife Service

Notice of Receipt of Applications for Permit

Endangered Species

The following applicants have applied for a permit to conduct certain activities with endangered species. This notice is provided pursuant to Section 10(c) of the Endangered Species Act of 1973, *as amended* (16 U.S.C. 1531, *et seq.*). Written data or comments should be submitted to the Director, U.S. Fish and Wildlife Service, Division of Management Authority, 4401 North Fairfax Drive, Room 700, Arlington, Virginia 22203 and must be received by the Director within 30 days of the date of this publication.

Applicant: Jack Gayden, Memphis, TN, PRT–043613

The applicant requests a permit to import the sport-hunted trophy of one male bontebok (*Damaliscus pygargus dorcas*) culled from a captive herd maintained under the management program of the Republic of South Africa, for the purposes of enhancement of the survival of the species.

Applicant: Alan Chopp, Edison, NJ, PRT–044694

The applicant requests a permit to import the sport-hunted trophy of one male bontebok (*Damaliscus pygargus dorcas*) culled from a captive herd maintained under the management program of the Republic of South Africa, for the purposes of enhancement of the survival of the species.

Applicant: Jeffrey Everett Rhees, Oakwood, OH, PRT–040140

The applicant requests a permit to import the sport-hunted trophy of one male bontebok (*Damaliscus pygargus dorcas*) culled from a captive herd maintained under the management program of the Republic of South Africa, for the purposes of enhancement of the survival of the species.

Applicant: Ludwid F. Kroner, III, Rock Springs, WY, PRT–044693

The applicant requests a permit to import the sport-hunted trophy of one male bontebok (*Damaliscus pygargus dorcas*) culled from a captive herd maintained under the management program of the Republic of South Africa, for the purposes of enhancement of the survival of the species.

Applicant: Glenn D. Vondra, Johnston, IA, PRT–044701

The applicant requests a permit to import the sport-hunted trophy of one male bontebok (*Damaliscus pygargus dorcas*) culled from a captive herd maintained under the management program of the Republic of South Africa, for the purposes of enhancement of the survival of the species.

Applicant: Russell J. Lafave, Midland, MI, PRT–044744

The applicant requests a permit to import the sport-hunted trophy of one male bontebok (*Damaliscus pygargus dorcas*) culled from a captive herd maintained under the management program of the Republic of South Africa, for the purposes of enhancement of the survival of the species.

Applicant: William K. Wright, Jr., Virginia Beach, VA, PRT–044761

The applicant requests a permit to import the sport-hunted trophy of one male bontebok (*Damaliscus pygargus dorcas*) culled from a captive herd maintained under the management program of the Republic of South Africa, for the purposes of enhancement of the survival of the species.

Applicant: William K. Wright, Virginia Beach, VA, PRT–044762

The applicant requests a permit to import the sport-hunted trophy of one male bontebok (*Damaliscus pygargus dorcas*) culled from a captive herd maintained under the management program of the Republic of South Africa, for the purposes of enhancement of the survival of the species.

Applicant: Zoological Society of San Diego, Escondido, CA, PRT–042002

The applicant requests a permit to import one male captive-born lion-tailed macaque (*Macaca silenus*) from the Toronto Zoo, Ontario, Canada, for the purpose of enhancement of the survival of the species through captive propagation.

Applicant: Feld Entertainment, Inc. dba Ringling Brothers and Barnum & Bailey, Vienna, VA, PRT–043769 and 043770

The applicant requests a permit to export, re-export and re-import captive born and captive-held Asian elephants (*Elephas maximus*), captive born tigers (*Panthera tigris*), captive born Bengal tigers (*Panthera tigris tigris*) and progeny of the animals currently held by the applicant and any animals acquired in the United States by the applicant to/from worldwide locations to enhance the survival of the species through conservation education. This notification covers activities conducted by the applicant over a three-year period.

Applicant: Kellie Heckman/ Northwestern University, Evanston, IL, PRT–041135

The applicant requests a permit to import biological samples from woolly lemur (*Avahi laniger*), aye-aye (*Daubentonia madagascariensis*), brown lemur (*Eulemur fulvus*), red-bellied lemur (*Eulemur rubriventer*), golden bamboo lemur (*Hapalemur aureus*), grey gentile lemur (*Hapalemur griseus*), broad-nosed gentile lemur (*Hapalemur simus*), sportive lemur (*Lepilemur mustelinus*), diademed sifaka (*Propithecus diadema*), ruffed lemur (*Varecia variegata*), greater dwarf lemur (*Cheirogaleus major*), and brown mouse lemur (*Microcebus rufus*) collected in the wild in Madagascar, for scientific research.

Applicant: AZA Rhinoceros Advisory Group (Rhino TAG) on behalf of Fossil Rim Wildlife Center, Glen Rose, TX, PRT–042655

The applicant requests a permit to import 1.0 captive-born black rhinoceros (*Diceros bicornis*) from the Western Plains Zoo, Dubbo, Australia for the purpose of enhancement of the species through captive propagation.

Applicant: AZA Rhinoceros Advisory Group (Rhino TAG) c/o The Wilds, Cumberland, OH, PRT–042654

The applicant requests a permit to export 2.0 captive-born black rhinoceros (*Diceros bicornis*) to the Mkomazi Rhino Sanctuary, Mkomazi Game Reserve, Kilimanjaro Region, Tanzania, to enhance the survival of the species through reintroduction into the wild.

Applicant: Nancy Ellen Drilling/ University of Minnesota, St. Paul. MN, PRT–042484

The applicant requests a permit to import feathers from white-winged duck (*Cairina scutulata*) collected in the wild in Indonesia, for scientific research.

Marine Mammals

The public is invited to comment on the following application(s) for a permit to conduct certain activities with marine mammals. The application(s) was submitted to satisfy requirements of the Marine Mammal Protection Act of 1972, *as amended* (16 U.S.C. 1361, *et seq.*) and the regulations governing marine mammals (50 CFR 18).

Written data, comments or requests for copies of these complete applications or requests for a public hearing on these applications should be sent to the U.S. Fish and Wildlife Service, Division of Management Authority, 4401 N. Fairfax Drive, Room 700, Arlington, Virginia 22203, telephone 703/358–2104 or fax 703/358–2281. These requests must be received within 30 days of the date of publication of this notice. Anyone requesting a hearing should give specific reasons why a hearing would be appropriate. The holding of such a hearing is at the discretion of the Director.

Applicant: Charles W. Helscel, Owasso, OK, PRT–044695

The applicant requests a permit to import a polar bear (*Ursus maritimus*) sport-hunted from the Northern Beaufort Sea polar bear population in Canada for personal use, taken May, 2001.

The U.S. Fish and Wildlife has information collection approval from OMB through February 28, 2001. OMB Control Number 1018–0093. Federal Agencies may not conduct or sponsor and a person is not required to respond to a collection of information unless it displays a current valid OMB control number.

Documents and other information submitted with these applications are available for review, *subject to the requirements of the Privacy Act and Freedom of Information Act,* by any party who submits a written request for a copy of such documents to the following office within 30 days of the date of publication of this notice: U.S. Fish and Wildlife Service, Division of Management Authority, 4401 North Fairfax Drive, Room 700, Arlington, Virginia 22203. Phone: (703/358–2104); FAX: (703/358–2281).

Dated: June 22, 2001.

Michael S. Moore,

Senior Permit Biologist, Branch of Permits, Division of Management Authority.

[FR Doc. 01–16708 Filed 7–2–01; 8:45 am]

BILLING CODE 4310–55–P

DEPARTMENT OF THE INTERIOR

Fish and Wildlife Service

Issuance of Permit for Marine Mammals

On May 7, 2001, a notice was published in the **Federal Register**, Vol. 66, No. 88, Page 23044, that an application had been filed with the Fish and Wildlife Service by Lee R. Anderson, Sr., for a permit (PRT–042004) to import one polar bear (*Ursus maritimus*) trophy taken from the Lancaster Sound population, Canada for personal use.

Notice is hereby given that on June 13, 2001, as authorized by the provisions of the Marine Mammal Protection Act of 1972, *as amended* (16 U.S.C. 1361 *et seq.*) the Fish and Wildlife Service authorized the requested permit subject to certain conditions set forth therein.

On March 20, 2001, a notice was published in the **Federal Register**, Vol. 66, No. 54, Page 15736, that an application had been filed with the Fish and Wildlife Service by Donald L. Fetterolf, for a permit (PRT–040021) to import one polar bear (*Ursus maritimus*) trophy taken from the Lancaster Sound population, Canada for personal use.

Notice is hereby given that on June 7, 2001, as authorized by the provisions of the Marine Mammal Protection Act of 1972, *as amended* (16 U.S.C. 1361 *et*

seq.) the Fish and Wildlife Service authorized the requested permit subject to certain conditions set forth therein.

Documents and other information submitted for these applications are available for review by any party who submits a written request to the U.S. Fish and Wildlife Service, Division of Management Authority, 4401 North Fairfax Drive, Room 700, Arlington, Virginia 22203. Phone (703) 358–2104 or Fax (703) 358–2281.

Dated: June 22, 2001.

Michael S. Moore,

Senior Biologist, Branch of Permits, Division of Management Authority.

[FR Doc. 01–16707 Filed 7–2–01; 8:45 am]

BILLING CODE 4310–55–P

DEPARTMENT OF THE INTERIOR

National Park Service

Notice of Boundary Revision: Piscataway Park

AGENCY: National Park Service, Interior.

ACTION: Notice of boundary revision.

SUMMARY: Notice is hereby given that the National Park Service (NPS) is revising the boundary of Piscataway Park to include two additional tracts of land.

FOR FURTHER INFORMATION CONTACT: Chief, Land Resources Program Center, National Park Service, National Capital Region, 1100 Ohio Drives, SW., Washington, D.C. 20242, (202) 619–7034; or Superintendent, National Capital Parks-East, 1900 Anacostia Drive, SW., Washington, D.C. 20020, (202) 690–5185.

SUPPLEMENTARY INFORMATION: Public Law 87–362 enacted October 4, 1961, authorizes the Secretary of the Interior to acquire lands and interests therein for Piscataway Park. Section 7(c)(ii) of the Land and Water Conservation Fund Act, as amended by Section 814(b) of Public Law 104–333, authorizes minor boundary revisions of areas within the National Park System. Such boundary revisions may be made when necessary, after advising the appropriate Congressional Committees, and following publication of a revised boundary map, drawing or other boundary description in the **Federal Register**. In order to preserve lands, which comprise the principal viewshed from Mount Vernon and Fort Washington in a manner that will ensure, insofar as practicable, the natural beauty of such land as it existed at the construction and active use of Mount Vernon Mansion and Fort Washington, it is necessary to revise the existing boundary of Piscataway Park to include two additional tracts of land comprising approximately 141 acres. The owners of Tract Number 01–264, a 40-acre parcel of unimproved land, have offered to donate the fee-simple interest in the property to NPS. A scenic easement interest in Tract Number 02–219, a 101-acre parcel of unimproved land, will also be acquired by NPS as a donation.

Notice is hereby given that the boundary of Piscataway Park is hereby revised to include two additional tracts of land as more particularly described as follows:

Tract Number 01–264, consisting of 40 acres of unimproved land located within the Fifth Election District of Prince Georges County, Maryland, and identified as part of Parcel Number 8 on Prince Georges County, Maryland Tax Map 141.

Tract Number 02–219, consisting of 101 acres of unimproved land located within the Seventh Election District of Charles County, Maryland, and identified as Parcel Number 126 on Charles County, Maryland Tax Map 1.

The above referenced properties are also depicted on Piscataway Park land status maps numbered 836/80036 which are available for inspection in the office of the Land Resources Program Center, National Park Service, National Capital Region, 1100 Ohio Drive, SW., Washington, D.C. 20242.

Dated: June 14, 2001.

Terry R. Carlstrom,

Regional Director, National Park Service, National Capital Region.

[FR Doc. 01–16715 Filed 7–2–01; 8:45 am]

BILLING CODE 4310–70–M

DEPARTMENT OF THE INTERIOR

Office of Surface Mining Reclamation and Enforcement

Notice of Proposed Information Collection

AGENCY: Office of Surface Mining Reclamation and Enforcement, Interior.

ACTION: Notice and request for comments.

SUMMARY: In compliance with the Paperwork Reduction Act of 1995, the Office of Surface Mining Reclamation and Enforcement (OSM) is announcing that the information collection requests for the Procedures and Criteria for Approval or Disapproval of State Program Submissions, 30 CFR 732; and General Reclamation Requirements, 30 CFR 874, have been forwarded to the Office of Management and Budget (OMB) for review and comment. The information collection requests describe the nature of the information collections and their expected burden and cost.

DATES: OMB has up to 60 days to approve or disapprove the information collection but may respond after 30 days. Therefore, public comments should be submitted to OMB by August 2, 2001, in order to be assured of consideration.

ADDRESSES: Office of Information and Regulatory Affairs, Office of Management and Budget, Attention: Department of Interior Desk Officer, 725 17th Street, NW., Washington, DC 20503. Also, please send a copy of your comments to John A. Trelease, Office of Surface Mining Reclamation and Enforcement, 1951 Constitution Ave, NW, Room 210—SIB, Washington, DC 20240, or electronically to jtreleas@osmre.gov.

FOR FURTHER INFORMATION CONTACT: To request a copy of either information collection request, explanatory information and related form, contact John A. Trelease at (202) 208–2783. You may also contact Mr. Trelease at jtreleas@osmre.gov.

SUPPLEMENTARY INFORMATION: OMB regulations at 5 CFR 1320, which implement provisions of the Paperwork Reduction Act of 1995 (Pub. L. 104–13), require that interested members of the public and affected agencies have an opportunity to comment on information collection and recordkeeping activities [see 5 CFR 1320.8(d)]. OSM has submitted two requests to OMB to renew its approval for the collections of information found at 30 CFR parts 732 and 874. OSM is requesting a 3-year term of approval for these information collection activities.

An agency may not conduct or sponsor, and a person is not required to respond to, a collection of information unless it displays a currently valid OMB control number. The OMB control numbers for these collections of information are 1029–0024 for Part 732 and 1029–0113 for Part 874, and may be found in OSM's regulations at 732.10 and 874.10.

As required under 5 CFR 1320.8(d), a **Federal Register** notice soliciting comments on the collections of information for Parts 732 and 874 was published on April 6, 2001 (66 FR 18298). No comments were received from that notice. This notice provides the public with an additional 30 days in which to comment on the following information collection activities:

Title: Procedures and Criteria for Approval or Disapproval of State Program Submissions, 30 CFR 732.

OMB Control Number: 1029–0024.

Summary: Part 732 establishes the procedures and criteria for approval and disapproval of State program submissions. The information submitted is used to evaluate whether State regulatory authorities are meeting the provisions of their approved programs.

Bureau Form Number: None.

Frequency of Collection: Once and annually.

Description of Respondents: 24 State regulatory authorities.

Total Annual Responses: 65.

Total Annual Burden Hours: 9,205.

Title: General Reclamation Requirements, 30 CFR 874.

OMB Control Number: 1029–0113.

Summary: Part 874 establishes land and water eligibility requirements, reclamation objectives and priorities and reclamation contractor responsibility. 30 CFR 874.17 requires consultation between the AML agency and the appropriate Title V regulatory authority on the likelihood of removing the coal under a Title V permit and concurrences between the AML agency and the appropriate Title V regulatory authority on the AML project boundary and the amount of coal that would be extracted under the AML reclamation project.

Bureau Form Number: None.

Frequency of Collection: Once.

Description of Respondents: 26 State regulatory authorities and Indian tribes.

Total Annual Responses: 45.

Total Annual Burden Hours: 3,240.

Send comments on the need for the collections of information for the performance of the functions of the agency; the accuracy of the agency's burden estimates; ways to enhance the quality, utility and clarity of the information collections; and ways to minimize the information collection burden on respondents, such as use of automated means of collection of the information, to the following address. Please refer to the appropriate OMB control number in all correspondence.

Dated: June 6, 2001.

Richard G. Bryson,

Chief, Division of Regulatory Support.

[FR Doc. 01–16716 Filed 7–2–01; 8:45 am]

BILLING CODE 4310–05–M

INTERNATIONAL TRADE COMMISSION

[Investigation No. TA–201–73]

Steel

AGENCY: United States International Trade Commission.

ACTION: Institution and scheduling of an investigation under section 202 of the Trade Act of 1974 (19 U.S.C. 2252) (the Act).

SUMMARY: Following receipt of a request from the United States Trade Representative on June 22, 2001, the Commission instituted investigation No. TA–201–73 under section 202 of the Act to determine whether certain steel products,[1] are being imported into the United States in such increased quantities as to be a substantial cause of serious injury, or the threat thereof, to the domestic industry producing an article like or directly competitive with the imported article.

For further information concerning the conduct of this investigation, hearing procedures, and rules of general application, consult the Commission's Rules of Practice and Procedure, part 201, subparts A through E (19 CFR part 201), and part 206, subparts A and B (19 CFR part 206).

EFFECTIVE DATE: June 22, 2001.

FOR FURTHER INFORMATION CONTACT: Vera Libeau (202–205–3176) for general procedural questions; Mary Messer (202–205–3193) for carbon and alloy flat products; D.J. Na (202–708–4727) for carbon and alloy long products; Christopher Cassise (202–708–5408) for carbon and alloy tubular products and fittings and specialty products, Office of Investigations, U.S. International Trade Commission, 500 E Street SW, Washington, DC 20436. Hearing-impaired persons can obtain information on this matter by contacting the Commission's TDD terminal on 202–205–1810. Persons with mobility impairments who will need special assistance in gaining access to the Commission should contact the Office of the Secretary at 202–205–2000. General information concerning the Commission may also be obtained by accessing its internet server (http://www.usitc.gov). The public record for this investigation may be viewed on the Commission's electronic docket (EDIS–ON–LINE) at http://dockets.usitc.gov/eol/public.

SUPPLEMENTARY INFORMATION:

[1] The request letter and the accompanying annexes listing the covered products by HTS categories are on the Commission's website (http://www.usitc.gov).

Participation in the Investigation and Service List

Persons wishing to participate in the investigation as parties must file an entry of appearance with the Secretary to the Commission, as provided in section 201.11 of the Commission's rules, not later than 21 days after publication of this notice in the **Federal Register**. The Secretary will prepare a service list containing the names and addresses of all persons, or their representatives, who are parties to this investigation upon the expiration of the period for filing entries of appearance.

Limited Disclosure of Confidential Business Information (CBI) Under an Administrative Protective Order (APO) and CBI Service List

Pursuant to section 206.17 of the Commission's rules, the Secretary will make CBI gathered in this investigation available to authorized applicants under the APO issued in the investigation, provided that the application is made not later than 21 days after the publication of this notice in the **Federal Register**. A separate service list will be maintained by the Secretary for those parties authorized to receive CBI under the APO.

Hearings on Injury and Remedy

The Commission has scheduled a series of separate hearings in connection with the injury and remedy phases of this investigation. The hearings on injury will begin the week of September 17, 2001, at the U.S. International Trade Commission Building and will continue for additional days to be determined. Requests to appear at the hearings should be filed in writing with the Secretary to the Commission on or before August 22, 2001. Requests should identify the products to be addressed and the amount of time requested. The Commission intends to publish a notice no later than September 5, 2001 concerning specific dates for the hearings and the products that will be the subject of each hearing. All persons desiring to appear at the hearings and make oral presentations should attend a prehearing conference to be held at 9:30 a.m. on September 12, 2001 at the U.S. International Trade Commission Building. In the event that the Commission makes an affirmative injury determination or is equally divided on the question of injury in this investigation, hearings on the question of remedy will begin the week of November 5, 2001 and will continue for additional days to be determined. Requests to appear at these hearings should be filed in writing with the

Secretary to the Commission on or before October 23, 2001. All persons desiring to appear at the hearings and make oral presentations should attend a prehearing conference to be held at 9:30 a.m. on October 30, 2001 at the U.S. International Trade Commission Building. Oral testimony and written materials to be submitted at the hearings are governed by sections 201.6(b)(2) and 201.13(f) of the Commission's rules. Parties must submit any request to present a portion of their hearing testimony *in camera* no later than 7 days prior to the dates of the hearings.

Written Submissions

Each party is encouraged to submit a prehearing brief to the Commission. The deadline for filing prehearing briefs on injury is September 10, 2001; that for filing prehearing briefs on remedy, including any commitments pursuant to 19 U.S.C. 2252(a)(6)(B), is October 29, 2001. Parties may also file posthearing briefs. The deadline for filing posthearing briefs on injury will be announced at the hearings; that for filing posthearing briefs on remedy will also be announced at the hearings. In addition, any person who has not entered an appearance as a party to the investigation may submit a written statement of information pertinent to the consideration of injury by a date to be announced at the hearings, and pertinent to the consideration of remedy also by a date to be announced at the hearings. All written submissions must conform with the provisions of section 201.8 of the Commission's rules; any submissions that contain confidential business information must also conform with the requirements of section 201.6 of the Commission's rules. The Commission's rules do not authorize filing of submissions with the Secretary by facsimile or electronic means.

In accordance with section 201.16(c) of the Commission's rules, each document filed by a party to the investigation must be served on all other parties to the investigation (as identified by the service list), and a certificate of service must be timely filed. The Secretary will not accept a document for filing without a certificate of service.

Authority: This investigation is being conducted under the authority of section 202 of the Trade Act of 1974; this notice is published pursuant to section 206.3 of the Commission's rules.

Issued: June 28, 2001.

By order of the Commission.

Donna R. Koehnke,

Secretary.

[FR Doc. 01–16779 Filed 7–2–01; 8:45 am]

BILLING CODE 7020–02–P

UNITED STATES INTERNATIONAL TRADE COMMISSION

Sunshine Act Meeting

AGENCY HOLDING THE MEETING: United States International Trade Commission.

TIME AND DATE: July 9, 2001 at 11 a.m.

PLACE: Room 101, 500 E Street, SW., Washington, DC 20436, Telephone: (202) 205–2000.

STATUS: Open to the public.

MATTERS TO BE CONSIDERED:

1. Agenda for future meeting: None.
2. Minutes.
3. Ratification List.
4. Inv. Nos. 731–TA–935–942 (Preliminary)(Certain Structural Steel Beams from China, Germany, Italy, Luxembourg, Russia, South Africa, Spain, and Taiwan)—briefing and vote. (The Commission is currently scheduled to transmit its determination to the Secretary of Commerce on July 9, 2001; Commissioners' opinions are currently scheduled to be transmitted to the Secretary of Commerce on July 16, 2001.)
5. Inv. Nos. 731–TA–943–947 (Preliminary)(Circular Welded Non-Alloy Steel Pipe from China, Indonesia, Malaysia, Romania, and South Africa)—briefing and vote. (The Commission is currently scheduled to transmit its determination to the Secretary of Commerce on July 9, 2001; Commissioners' opinions are currently scheduled to be transmitted to the Secretary of Commerce on July 16, 2001.)
6. Outstanding action jackets:

Document No. GC–01–068: Concerning Inv. No. 337–TA–455 (Certain Network Interface Cards and Access Points for Use in Direct Sequence Spread Spectrum Wireless Local Area Networks and Products Containing Same).

In accordance with Commission policy, subject matter listed above, not disposed of at the scheduled meeting, may be carried over to the agenda of the following meeting.

By order of the Commission. Issued: June 29, 2001.

Donna R. Koehnke,

Secretary.

[FR Doc. 01–16857 Filed 6–29–01; 3:44 pm]

BILLING CODE 7020–02–P

DEPARTMENT OF JUSTICE

Drug Enforcement Administration

Importer of Controlled Substances; Notice of Registration

By Notice dated September 8, 2000, and published in the **Federal Register** on September 25, 2000 (65 FR 57621), Abbott Laboratories, 1776 North Centennial Drive, McPherson, Kansas 67460–1247, made application to the Drug Enforcement Administration (DEA) to be registered as an importer of remifentanil (9739), a basic class of controlled substance listed in Schedule II.

The firm plans to import the remifentanil to manufacture Ultiva for the U.S. market.

No comments or objections have been received. DEA has considered the factors in Title 21, United States Code, section 823(a) and determined that the registration of Abbott Laboratories to import remifentanil is consistent with the public interest and with United States obligations under international treaties, conventions, or protocols in effect on May 1, 1971, at this time. DEA has investigated Abbott Laboratories on a regular basis to ensure that the company's continued registration is consistent with the public interest. This investigation included inspection and testing of the company's physical security systems, verification of the company's compliance with state and local laws, and a review of the company's background and history. Therefore, pursuant to section 1008(a) of the Controlled Substances Import and Export Act and in accordance with Title 21, Code of Federal Regulations, § 1301.34, the above firm is granted registration as an importer of the basic class of controlled substance listed above.

Dated: June 22, 2001.

Laura M. Nagel,

Deputy Assistant Administrator, Office of Diversion Control, Drug Enforcement Administration.

[FR Doc. 01–16679 Filed 7–2–01; 8:45 am]

BILLING CODE 4410–09–M

DEPARTMENT OF JUSTICE

Drug Enforcement Administration

Manufacturer of Controlled Substances; Notice of Registration

By Notice dated December 4, 2000, and published in the **Federal Register** on January 10, 2001, (66 FR 2004), Medeva Pharmaceuticals CA, Inc., 3501 West Garry Avenue, Santa Ana,

California 92704, made application by renewal to the Drug Enforcement Administration (DEA) to be registered as a bulk manufacturer of methylphenidate (1724), a basic class of controlled substance listed in schedule II.

The firm plans to manufacture the listed controlled substance to make finished dosage forms for distribution to its customers.

No comments or objections have been received. DEA has considered the factors in Title 21, United States Code, section 823(a) and determined that the registration of Medeva Pharmaceuticals CA, Inc. to manufacture the listed controlled substance is consistent with the public interest at this time. DEA has investigated Medeva Pharmaceuticals CA, Inc. on a regular basis to ensure that the company's continued registration is consistent with the public interest. These investigations have included inspection and testing of the company's physical security systems, audits of the company's records, verification of the company's compliance with state and local laws, and a review of the company's background and history. Therefore, pursuant to 21 U.S.C. 823 and 28 CFR 0.100 and 0.104, the Deputy Assistant Administrator, Office of Diversion Control, hereby orders that the application submitted by the above firm for registration as a bulk manufacturer of the basic class of controlled substance listed above is granted.

Dated: June 19, 2001.

Laura M. Nagel,

Deputy Assistant Administrator, Office of Diversion Control, Drug Enforcement Administration.

[FR Doc. 01–16680 Filed 7–2–01; 8:45 am]

BILLING CODE 4410–09–M

DEPARTMENT OF JUSTICE

Drug Enforcement Administration

Manufacturer of Controlled Substances; Notice of Application

Pursuant to § 1301.33(a) of Title 21 of the Code of Federal Regulations (CFR), this is notice that on January 18, 2001, National Center for Natural Products Research-NIDA MProject University of Mississippi, 135 Coy Waller Complex, University, Mississippi 38677, made application to the Drug Enforcement Administration (DEA) for registration as a bulk manufacturer of the basic classes of controlled substances listed below:

Drug	Schedule
Marihuana (7360)	I
Tetrahydrocannabinols (7370)	I

The firm will cultivate marihuana for the National Institute of Drug Abuse for research approved by the Department of Health and Human Services.

Any other such applicant and any person who is presently registered with DEA to manufacture such substance may file comments or objections to the issuance of the proposed registration.

Any such comments or objections may be addressed, in quintuplicate, to the Deputy Assistant Administrator, Office of Diversion Control, Drug Enforcement Administration, United States Department of Justice, Washington, DC 20537, Attention: DEA Federal Register Representative (CCR), and must be filed no later than September 4, 2001.

Dated: June 19, 2001.

Laura M. Nagel,

Deputy Assistant Administrator, Office of Division Control, Drug Enforcement Administration.

[FR Doc. 01–16682 Filed 7–2–01; 8:45 am]

BILLING CODE 4410–09–M

DEPARTMENT OF JUSTICE

Drug Enforcement Administration

Manufacturer of Controlled Substances; Notice of Registration

By Notice dated December 5, 2000, and published in the **Federal Register** on January 10, 2001 (66 FR 2004), the National Center for Development of Natural Products, the University of Mississippi, 135 Coy Waller Complex, University, Mississippi 38677, made application by renewal to the Drug Enforcement Administration (DEA) to be registered as a bulk manufacturer of the controlled substances listed below:

Drug	Schedule
Marihuana (7360)	I
Tetrahydrocannabinols (7370)	I

The firm plans to bulk manufacture for product development.

No comments or objections have been received. DEA has considered the factors in Title 21, Untied States Code, section 823(a) and determined that the registration of National Center for Development of Natural Products to manufacture the listed controlled substances is consistent with the public interest at this time. This determination was based on, among other things, DEA's on-site investigation of the National Center for Development for Natural Products. The investigation included inspection and testing of the applicant's qualifications and experience, verification of the applicant's compliance with state and local laws, and a review of the firm's background and history. DEA has further determined that the registration will be consistent with United States obligations under international treaties. Therefore, pursuant to 21 U.S.C. 823 and 28 CFR 0.100 and 0.104, the Deputy Assistant Administrator, Office of Diversion Control, hereby orders that the application submitted by the above firm for registration as a bulk manufacturer of the basic classes of controlled substances listed above is granted.

Dated: June 19, 2001.

Laura M. Nagel,

Deputy Assistant Administrator, Office of Diversion Control, Drug Enforcement Administration.

[FR Doc. 01–16683 Filed 7–2–01; 8:45 am]

BILLING CODE 4410–09–M

DEPARTMENT OF JUSTICE

Drug Enforcement Administration

Manufacturer of Controlled Substances; Notice of Registration

By Notice dated December 5, 2000, and published in the **Federal Register** on January 10, 2001, (66 FR 71), Norac Company, Inc., 405 S. Motor Avenue, Azusa, California 91702, made application by renewal to the Drug Enforcement Administration (DEA) to be registered as a bulk manufacturer of tetrahydrocannabinols (7370), a basic class of controlled substance listed in Schedule I.

The firm plans to manufacture tetrahydrocannabinols (THC) for use in treatment of AIDS wasting syndrome and as an antiemetic.

No comments or objections have been received. DEA has considered the factors in Title 21, United States Code, section 823(a) and determined that the registration of Norac Company, Inc. to manufacture tetrahydrocannabinols is consistent with the public interest at this time. DEA has investigated Norac Company, Inc. on a regular basis to ensure that the company's continued registration is consistent with the public interest. Thee investigations have included inspection and testing of the company's physical security systems, audits of the company's records, verification of the company's compliance with state and local laws, and a review of the company's background and history. Therefore,

pursuant to 21 U.S.C. 823 and 28 CFR 0.100 and 0.104, the Deputy Assistant Administrator, Office of Diversion Control, hereby orders that the application submitted by the above firm for registration as a bulk manufacturer of the basic class of controlled substance listed above is granted.

Dated: June 19, 2001.

Laura M. Nagel,

Deputy Assistant Administrator, Office of Diversion Control, Drug Enforcement Administration.

[FR Doc. 01–16681 Filed 7–2–01; 8:45 am]

BILLING CODE 4410–09–M

DEPARTMENT OF JUSTICE

Immigration and Naturalization Service

[INS No. 2148–01; AG Order No.]

RIN 1115—AE26

Automatic Extension of Work Authorization for Hondurans and Nicaraguans Under Temporary Protected Status Program

AGENCY: Immigration and Naturalization Service, Justice.

ACTION: Notice.

SUMMARY: On May 8, 2001, the Immigration and Naturalization Service (Service) published notices in the **Federal Register** extending the designation of Honduras and Nicaragua under the Temporary Protected Status (TPS) Program until July 5, 2002. The extension for TPS allows eligible nationals of Honduras and Nicaragua to re-register for TPS and extend employment authorization. The Service is aware that may re-registrants will not receive their new employment authorization documents (EADs) until after their current EADs expire on July 5, 2001. Accordingly, this notice extends until December 5, 2001, the validity of EADs that were issued to Honduran or Nicaraguan nationals (or aliens having no nationality who last habitually resided in Honduras or Nicaragua) that are set to expire on July 5, 2001, under the extension of the TPS program. To be eligible for this automatic extension of employment authorization, an individual must be a national of Honduras or Nicaragua (or an alien having no nationality who last habitually resided in Honduras or Nicaragua) who currently holds an EAD that expires on July 5, 2001 and that was issued in conjunction with the TPS program for Honduras or Nicaragua. This automatic extension is limited to EADs bearing date of July 5, 2001 and the notation:

• ''A–12'' or ''C–19'' on the face of the card under ''Category'' for EADs issued on Form I–766; or, ''274A.12(A)(12)'' or ''274A.12(C)(19)'' on the face of the card under ''Provision of Law'' for EADs issued on Form I–688B.

DATES: This notice is effective July 3, 2001.

FOR FURTHER INFORMATION CONTACT: Michael Biggs, Office of Adjudications, Immigration and Naturalization Service, Room 3214, 425 I Street, NW., Washington, DC 20536, telephone (202) 514–4754.

SUPPLEMENTARY INFORMATION:

Why Is the Service Automatically Extending the Expiration Date of EADs From July 5, 2001 to December 5, 2001?

Considering both the number of applications that the Service anticipates it will receive for extension, Service processing capabilities, and given the short timeframe provided by statute for the decision to extend the Attorney General's designation of Honduras and Nicaragua under the TPS program, it is likely that many re-registrants will receive their new EAD after the expiration date of their current EAD. Unless an extension of the expiration date of their EAD is provided, re-registrants may experience a gap in employment authorization and be barred from working. Therefore, to afford the Service sufficient processing time or to ensure that re-registrants will be able to maintain their employment authorization until they receive a new EAD in connection with their re-registration for the new period of TPS, the Service through this notice, is extending the validity of applicable EADs to December 5, 2001.

Who Is Eligible To Receive an Automatic Extension of Employment Authorization?

To be eligible for an automatic extension of employment authorization, an individual must be a national of Honduras or Nicaragua (or an alien having no nationality who last habitually resided in Honduras or Nicaragua) who previously applied for an received an EAD under the initial January 5, 1999, designation of Honduras or Nicaragua for TPS. This automatic extension is limited to EADs bearing an expiration date of July 5, 2001, and the notation:

• ''A–12'' or ''C–19'' on the face of the card under ''Category'' for EADs issued on Form I–766; or,

• ''274A.12(A)(12)'' or ''274A.12(C)(19)'' on the face of the card under ''Provision of Law'' for EADs issued on Form I–688B.

Does a Qualified Individual Have To Apply to the Service for the Automatic Extension to December 5, 2001, of His or Her TPS-related EAD?

No, the extension of the validity of the previously issued EADS to December 5, 2001, is automatic and there is no fee. However, qualified individuals must re-register by August 6, 2001, in order to be eligible for a new EAD that is valid until July 5, 2002.

What Documents Can a Qualified Individual Show to His or Her Employer as Proof of Employment Authorization and Identify When Completing the Employment Eligibility Verification Form (Form I–9)?

For completion of the Form I–9 at the time of hire or re-verification, qualified individuals who have received an extension of employment authorization by virtue of this **Federal Register** notice may present to their employer a TPS-related EAD as proof of valid employment authorization and identity until December 5, 2001. To minimize confusion over this extension at the time of hire or re-verification, qualified individuals may also present to their employer a copy of this **Federal Register** notice regarding the extension of employment authorization to December 5, 2001. In the alternative to presenting a TPS-related EAD, any legally acceptable document or combination of documents listed in List A, List B, or List C of the Form I–9 may be presented as proof of identity and employment eligibility; it is the choice of the employee.

How Can Employers Determine Which EADs That Have Been Automatically Extended Through December 5, 2001, Are Acceptable for Completion of the Form I–9?

For purposes of verifying identity and employment eligibility or re-verifying employment eligibility on the Form I–9 until December 5, 2001, employers of TPS Honduran or Nicaraguan nationals (or aliens having no nationality who last habitually resided in Honduras or Nicaragua) whose employment authorization has been automatically extended by this notice mut accept an EAD that contains an expiration date of July 5, 2001, and that bears that notation:

• ''A–12'' or ''C–19'' on the face of the card under ''Category'' for EADs issued on Form I–766; or,

• ''274A.12(A) (12)'' or ''274A.12(c) (19)'' on the face of the card under ''Provision of Law'' for EADs issued on Form I–688B.

New EADs or extension stickers showing the December 5, 2001,

expiration date will not be issued. Employers should not request proof of Honduran or Nicaraguan citizenship. Employers presented with an EAD that has been extended by this **Federal Register** notice and that appears to be genuine and to relate to the employee should accept the document as a valid List A document and should not ask for additional Form I–9 documentation. This action by the Service through this **Federal Register** notice does not affect the right of an employee to present any legally acceptable document as proof of identity and eligibility for employment. Employers are reminded that the laws prohibiting unfair immigration-related employment practices remain in full force.

Employers may call the Service's Office of Business Liaison Employer Hotline at 1–800–357–2099 to speak to a Service representative about this Notice. Employers can also call the Office of Special Counsel for Immigration Related Unfair Employment Practices (OSC) Employer Hotline at 1–800–255–8155. Employees or applicants can call the OSC Employee Hotline at 1–800–255–7688 about the automatic extension.

Does This Notice Affect Any Other Portion of the May 8, 2001, Federal Register Notices Extending TPS Designation for Honduras and Nicaragua Until July 5, 2002?

No, all other TPS requirements contained in the May 8, 2001, **Federal Register** notices at 66 FR 23269 and 66 FR 23271, respectively, are accurate and remain in effect.

Dated: June 28, 2001.

Kevin D. Rooney,

Commissioner.

[FR Doc. 01–16745 Filed 6–29–01; 8:45 am]

BILLING CODE 4410–01–M

DEPARTMENT OF LABOR

Occupational Safety and Health Administration

[Docket No. NRTL2–92]

Canadian Standards Association, Renewal and Expansion of Recognition

AGENCY: Occupational Safety and Health Administration (OSHA), Labor.

ACTION: Notice.

SUMMARY: This notice announces the Agency's final decision on: (1) the application of the Canadian Standards Association (CSA) for renewal of its recognition as a Nationally Recognized Testing Laboratory under 29 CFR 1910.7, and (2) the application of the Canadian Standards Association for expansion of its recognition to use additional standards.

EFFECTIVE DATE: The renewal becomes effective on July 3, 2001 and will be valid until July 3, 2006, unless terminated or modified prior to that date, in accordance with 29 CFR 1910.7.

FOR FURTHER INFORMATION CONTACT: Bernard Pasquet, Office of Technical Programs and Coordination Activities, NRTL Program, Occupational Safety and Health Administration, U.S. Department of Labor, 200 Constitution Avenue, NW, Room N3653, Washington, D.C. 20210, or phone (202) 693–2110.

SUPPLEMENTARY INFORMATION:

Notice of Final Application

The Occupational Safety and Health Administration (OSHA) hereby gives notice of the renewal and expansion of recognition of the Canadian Standards Association (CSA) as a Nationally Recognized Testing Laboratory (NRTL). CSA's expansion request covers the use of additional test standards. The NRTL's scope of recognition may be found in OSHA's informational web page for the NRTL (http://www.osha-slc.gov/dts/otpca/nrtl/csa.html).

OSHA recognition of an NRTL signifies that the organization has met the legal requirements in Section 1910.7 of Title 29, Code of Federal Regulations (29 CFR 1910.7). Recognition is an acknowledgment that the organization can perform independent safety testing and certification of the specific products covered within its scope of recognition and is not a delegation or grant of government authority. As a result of recognition, employers may use products ''properly certified'' by the NRTL to meet OSHA standards that require testing and certification.

The Agency processes applications by an NRTL for initial recognition or for expansion or renewal of this recognition following requirements in Appendix A to 29 CFR 1910.7. This appendix requires that the Agency publish two notices in the **Federal Register** in processing an application. In the first notice, OSHA announces the application and provides its preliminary finding and, in the second notice, the Agency provides its final decision on the application. These notices set forth the NRTL's scope of recognition or modifications of that scope.

CSA originated in 1919 as the Canadian Engineering Standards Association (CESA), which was changed in 1944 to the present name. In 1940, CSA began to test and certify products.

CSA received its recognition as an NRTL on December 24, 1992 (see 57 FR 61452), for a period of five years ending December 24, 1997. Appendix A to 29 CFR 1910.7 stipulates that the period of recognition of an NRTL is five years and that an NRTL may renew its recognition by applying not less than nine months, nor more than one year, before the expiration date of its current recognition. CSA submitted its renewal request on March 20, 1997 (see Exhibit 26A), within the time allotted, and CSA retains its recognition pending OSHA's final decision in this renewal process.

In July 1997, CSA acquired additional testing facilities from the American Gas Association (AGA). OSHA had recognized AGA operation of these facilities for NRTL status in 1990 (June 7, 1990, 55 FR 23312). OSHA was in the process of renewing its recognition of these facilities when CSA acquired them. Although OSHA was generally aware that CSA had made this acquisition, CSA did not officially inform OSHA until March 1999 as to how it wanted to treat these sites within its NRTL operations. The NRTL Program staff withheld action on CSA's renewal request until it received this information.

CSA has submitted a request, dated June 16, 1999 (see Exhibit 26B), to expand its recognition as an NRTL to include 195 additional test standards. The NRTL Program staff has determined that 51 of the 195 standards are not ''appropriate test standards,'' within the meaning of 29 CFR 1910.7(c). The staff makes such determinations in processing expansion requests from any NRTL. Therefore, OSHA is approving 144 test standards for the expansion, which are listed below in the section on expansion.

OSHA published the required notice in the **Federal Register** on March 16, 2001, (66 FR 15281) to announce CSA's renewal and expansion requests. This notice included a preliminary finding that CSA could meet the requirements in 29 CFR 1910.7 for renewal and expansion of its recognition and invited public comment by April 2, 2001. OSHA received no comments concerning this notice.

In processing CSA's requests, OSHA performed on-site reviews of CSA's facilities listed below. NRTL Program staff recommended the renewal and expansion of CSA's recognition in the on-site review report (see Exhibit 27).

The following is a chronology of the other **Federal Register** notices published by OSHA concerning CSA's recognition, all of which have involved an expansion of recognition for additional sites, standards, or programs:

a request announced on July 20, 1999 (64 FR 38926) and granted on November 4, 1999 (64 FR 60240) a request announced on December 10, 1993 (58 FR 64973) and granted on February 4, 1994 (59 FR 5446); a request announced on March 3, 1994 (59 FR 10173) and granted on August 9, 1994 (59 FR 40602); a request announced on December 8, 1994 (59 FR 63383) and granted on March 24, 1995 (60 FR 15595); and a request announced on July 12, 1996 (61 FR 36763) and granted on November 20, 1996 (61 FR 59110). The renewal incorporates all recognitions granted to CSA through the date of publication of this preliminary finding.

You may obtain or review copies of all public documents pertaining to the CSA application by contacting the Docket Office, Occupational Safety and Health Administration, U.S. Department of Labor, 200 Constitution Avenue, NW, Room N2625, Washington, D.C. 20210. You should refer to Docket No. NRTL–2–92, the permanent record of public information on the CSA recognition.

The current address of the CSA testing facilities already recognized by OSHA are:

Canadian Standards Association, Etobicoke (Toronto), 178 Rexdale Boulevard, Etobicoke, Ontario, M9W 1R3

CSA International, Pointe-Claire (Montreal), 865 Ellingham Street, Pointe-Claire, Quebec H9R 5E8

CSA International, Richmond (Vancouver), 13799 Commerce Parkway, Richmond, British Columbia V6V 2N9

CSA International, Edmonton, 1707–94th Street, Edmonton, Alberta T6N 1E6

CSA International, Cleveland, 8501 East Pleasant Valley Road, Cleveland, Ohio 44131 (formerly part of the American Gas Association)

CSA International, Irvine, 2805 Barranca Parkway, Irvine, California 92606 (formerly part of the American Gas Association)

Programs and Procedures

The renewal of recognition includes CSA's continued use of the following supplemental programs and procedures, based upon the criteria detailed in the March 9, 1995 **Federal Register** notice (60 FR 12980, 3/9/95). This notice lists nine (9) programs and procedures (collectively, programs), eight of which an NRTL may use to control and audit, but not actually to generate, the data relied upon for product certification. An NRTL's initial recognition will always include the first or basic program, which requires that all product testing and evaluation be performed in-house by the NRTL that will certify the product. OSHA has already recognized CSA for these programs, which are listed, as shown below, in OSHA's informational web page on the CSA recognition (http://www.osha-slc.gov/dts/otpca/nrtl/csa.html).

Program 2: Acceptance of testing data from independent organizations, other than NRTLs.

Program 3: Acceptance of product evaluations from independent organizations, other than NRTLs.

Program 4: Acceptance of witnessed testing data.

Program 5: Acceptance of testing data from non-independent organizations.

Program 6: Acceptance of evaluation data from non-independent organizations (requiring NRTL review prior to marketing).

Program 7: Acceptance of continued certification following minor modifications by the client.

Program 8: Acceptance of product evaluations from organizations that function as part of the International Electrotechnical Commission Certification Body (IEC–CB) Scheme.

Program 9: Acceptance of services other than testing or evaluation performed by subcontractors or agents.

OSHA developed these programs to limit how an NRTL may perform certain aspects of its work and to permit the activities covered under a program only when the NRTL meets certain criteria. In this sense, they are special conditions that the Agency places on an NRTL's recognition. OSHA does not consider these programs in determining whether an NRTL meets the requirements for recognition under 29 CFR 1910.7. However, these programs help to define the scope of that recognition.

Final Decision and Order

The NRTL Program staff has examined the applications, the assessor's report, and other pertinent information. Based upon this examination and the assessor's recommendation, OSHA finds that the Canadian Standards Association has met the requirements of 29 CFR 1910.7 for renewal and expansion of its NRTL recognition. The renewal applies to the sites listed above. In addition, it covers the test standards listed below, and it is subject to the limitations and conditions, also listed below. Pursuant to the authority in 29 CFR 1910.7, OSHA hereby renews and expands the recognition of CSA, subject to these limitations and conditions.

Limitations

Renewal of Recognition of Facilities

OSHA limits the renewal of recognition of CSA to the 6 sites listed above. In addition, similar to other NRTLs that operate multiple sites, the Agency's recognition of any CSA testing site is limited to performing testing to the test standards for which OSHA has recognized CSA and for which the site has the proper capability and control programs.

Renewal of Recognition of Test Standards

OSHA further limits the renewal of recognition of CSA to testing and certification of products to demonstrate conformance to the test standards listed below (see Listing of Test Standards). OSHA has determined that each test standard meets the requirements for an appropriate test standard, within the meaning of 29 CFR 1910.7(c). Some of the test standards for which OSHA previously recognized CSA were no longer appropriate at the time of preparation of the preliminary notice, primarily because they had been withdrawn by the standards developing organization. As a result, we have excluded these test standards in the listing below. However, under OSHA policy, the NRTL may request recognition for comparable test standards, i.e., other appropriate test standards covering similar types of product testing. Since a number of NRTLs are affected by such withdrawn standards, OSHA will publish a separate notice to make the appropriate substitutions for CSA and other NRTLs that were recognized for these standards. The Agency has contacted these NRTLs regarding this matter.

The Agency's recognition of CSA, or any other NRTL, for a particular test standard is always limited to equipment or materials (products) for which OSHA standards require third party testing and certification before use in the workplace. An NRTL's scope of recognition excludes any product(s) falling within the scope of the test standard for which OSHA has no such requirements.

Listing of Test Standards

ANSI A17.5 Elevators and Escalator Electrical Equipment

ANSI C37.20.1 Metal-Enclosed Low-Voltage Power Circuit-Breaker Switchgear [1]

ANSI C37.20.2 Metal-Clad and Station-Type Cubicle Switchgear [1]

ANSI C37.20.3 Metal-Enclosed Interrupter Switchgear [1]

ANSI C37.21 Control Switchboards [1]

ANSI C37.23 Metal Enclosed Bus and Calculating Losses in Isolated-Place Bus [1]
ANSI C37.41 Design Tests for High-Voltage Fuses, Distribution Enclosed Single Pole Air Switches, Fuse Disconnecting Switches and Accessories [1]
ANSI C37.46 Specifications for Power Fuses and Fuse Disconnecting Switches [1]
ANSI C37.54 Indoor Alternating-Current High Voltage Circuit Breakers Applied as Removable Elements in Metal-Enclosed Switchgear Assemblies—Conformance Test Procedures [1]
ANSI C37.55 Metal-Clad Switchgear Assemblies—Conformance Test Procedures [1]
ANSI C37.57 Metal-Enclosed Interrupter Switchgear Assemblies—Conformance Testing [1]
ANSI C37.58 Indoor AC Medium-Voltage Switches for Use in Metal-Enclosed Switchgear—Conformance Testing Procedures [1]
ANSI C37.121 Unit Substations—Requirements [1]
ANSI C62.11 Metal Oxide Surge Arresters for AC Power Circuits [1]
ANSI Z21.1 Household Cooking Gas Appliances
ANSI Z21.5.2 Gas Clothes Dryers, Type 2, Volume II
ANSI Z21.10.3 Gas Water Heaters, Volume III Storage, With Input Ratings Above 75,000 Btu Per Hour, Circulating and Instantaneous Water Heaters
ANSI Z21.12 Draft Hoods
ANSI Z21.13 Gas-Fired Low-Pressure Steam and Hot Water Heating Boilers
ANSI Z21.15 Manually Operated Gas Valves
ANSI Z21.17 Domestic Gas Conversion Burners
ANSI Z21.18 Gas Appliance Pressure Regulators
ANSI Z21.20 Automatic Gas Ignition Systems and Components
ANSI Z21.21 Automatic Valves for Gas Appliances
ANSI Z21.22 Relief Valves and Automatic Gas Shutoff Devices for Hot Water Supply Systems
ANSI Z21.23 Gas Appliance Thermostats
ANSI Z21.35 Gas Filters on Appliances
ANSI Z21.40.1 Gas-Fired Absorption Summer Air Conditioning Appliances
ANSI Z21.47 Gas-Fired Central Furnaces
ANSI Z21.48 Gas-Fired Gravity and Fan Type Floor Furnaces
ANSI Z21.49 Gas-Fired Gravity and Fan Type Vented Wall Furnaces
ANSI Z21.56 Gas-Fired Pool Heaters
ANSI Z21.61 Gas-Fired Toilets
ANSI Z21.66 Automatic Vent Damper Devices for Use With Gas-Fired Appliances Electrically Operated
ANSI Z21.73 Portable Camp Lanterns for Use With Propane Gas
ANSI Z83.3 Gas Utilization Equipment in Large Boilers
ANSI Z83.4 Direct Gas-Fired Make-Up Air Heaters
ANSI Z83.6 Gas-Fired Infrared Heaters
ANSI Z83.7 Gas-Fired Construction Heaters
ANSI Z83.8 Gas Unit Heaters
ANSI Z83.11 Gas Food Service Equipment—Ranges and Unit broilers
UL 1 Flexible Metal Conduit
UL 3 Flexible Nonmetallic Tubing for Electric Wiring
UL 4 Armored Cable
UL 5 Surface Metal Raceways and Fittings
UL 6 Rigid Metal Conduit
UL 13 Power-Limited Circuit Cables
UL 20 General-Use Snap Switches
UL 22 Electric Amusement Machines
UL 44 Rubber-Insulated Wires and Cables
UL 45 Portable Electric Tools
UL 48 Electric Signs
UL 50 Electrical Cabinets and Boxes
UL 51 Power-Operated Pumps for Anhydrous Ammonia and LP-Gas
UL 62 Flexible Cord and Fixture Wire
UL 65 Electric Wired Cabinets
UL 67 Electric Panelboards
UL 69 Electric Fence Controllers
UL 73 Electric-Motor-Operated Appliances
UL 79 Power-Operated Pumps for Petroleum Product Dispensing Systems
UL 82 Electric Gardening Appliances
UL 83 Thermoplastic-Insulated Wires and Cables
UL 87 Power-Operated Dispensing Devices for Petroleum Products
UL 94 Tests for Flammability of Plastic Materials for Parts in Devices and Appliances
UL 98 Enclosed and Dead-Front Switches
UL 104 Elevator Door Locking Devices
UL 122 Electric Photographic Equipment
UL 125 Valves for Anhydrous Ammonia and LP-Gas (Other Than Safety Relief)
UL 130 Electric Heating Pads
UL 132 Safety Relief Valves for Anhydrous Ammonia and LP-Gas
UL 141 Garment Finishing Appliances
UL 144 Pressure Regulating Valves for LP-Gas
UL 147 LP-and MPS-Gas Torches
UL 150 Antenna Rotators
UL 153 Portable Electric Lamps
UL 174 Household Electric Storage-Tank Water Heaters
UL 183 Manufactures Wiring Systems
UL 187 X-Ray Equipment
UL 197 Commercial Electric Cooking Appliances
UL 198B Class H Fuses
UL 198C High-Interrupting-Capacity Fuses, Current Limiting Type
UL 198D High-Interrupting-Capacity Class K Fuses
UL 198E Class R Fuses
UL 198F Plug Fuses
UL 198G Fuse for Supplementary Overcurrent Protection
UL 198H Class T Fuses
UL 198L DC Fuses for Industrial Use
UL 198M Mine-Duty Fuses
UL 207 Nonelectrical Refrigerant Containing Components and Accessories
UL 209 Cellular Metal Floor Electrical Raceways and Fittings
UL 224 Extruded Insulating Tubing
UL 228 Door Closers-Holders, and Integral Smoke Detectors
UL 231 Electrical Power Outlets
UL 244A Solid-State Controls for Appliances
UL 250 Household Refrigerators and Freezers
UL 291 Automated Teller Systems
UL 294 Access Control System Units
UL 296 Oil Burners
UL 298 Portable Electric Hand Lamps
UL 310 Electrical Quick-Connect Terminals
UL 325 Door, Drapery, Gate, Louver and Window Operators and Systems
UL 343 Pumps of Oil-Burning Appliances
UL 347 High-Voltage Industrial Control Equipment
UL 351 Electrical Rosettes
UL 353 Limit Controls
UL 355 Electric Cord Reels
UL 360 Liquid Tight Flexible Steel Conduit
UL 372 Primary Safety Controls for Gas- and Oil-Fired Appliances
UL 378 Draft Equipment
UL 391 Solid-Fuel and Combination-Fuel Control and Supplementary Furnaces
UL 399 Drinking-Water Coolers
UL 412 Refrigeration Unit Coolers
UL 414 Electrical Meter Sockets
UL 416 Refrigerated Medical Equipment
UL 427 Refrigerating Units
UL 429 Electrically Operated Valves
UL 430 Electric Waste Disposers
UL 444 Communications Cables
UL 448 Pumps for Fire Protection Service
UL 452 Antenna Discharge Units
UL 464 Audible Signal Appliances
UL 466 Electric Scales
UL 467 Electrical Grounding and Bonding Equipment
UL 469 Musical Instruments and Accessories

UL 471 Commercial Refrigerators and Freezers
UL 474 Dehumidifiers
UL 482 Portable Sun/Heat Lamps
UL 484 Room Air Conditioners
UL 486A Wire Connectors and Soldering Lugs for Use With Copper Conductors
UL 486B Wire Connectors for Use With Aluminum Conductors
UL 486C Splicing Wire Connectors
UL 486D Insulated Wire Connectors for Use With Underground Conductors
UL 486E Equipment Wiring Terminals for Use With Aluminum and/or Copper Conductors
UL 489 Molded-Case Circuit Breakers and Circuit-Breaker Enclosures
UL 493 Thermoplastic-Insulated Underground Feeder and Branch-Circuit Cables
UL 495 Power-Operated Dispensing Devices for LP-Gas
UL 496 Edison-Base Lampholders
UL 497 Protectors for Communication Circuits
UL 497A Secondary Protectors for Communication Circuits
UL 497B Protectors for Data Communication and Fire Alarm Circuits
UL 498 Attachment Plugs and Receptacles
UL 499 Electric Heating Appliances
UL 506 Specialty Transformers
UL 507 Electric Fans
UL 508 Electric Industrial Control Equipment
UL 508C Power Conversion Equipment
UL 510 Insulating Tape
UL 511 Porcelain Electrical Cleats, Knobs, and Tubes
UL 512 Fuseholders
UL 514A Metallic Outlet Boxes, Electrical
UL 514B Fittings for Conduit and Outlet Boxes
UL 514C Nonmetallic Outlet Boxes, Flush-Device Boxes and Covers
UL 541 Refrigerated Vending Machines
UL 542 Lampholders, Starters, and Starter Holders for Fluorescent Lamps
UL 544 Electric Medical and Dental Equipment
UL 551 Transformer-Type Arc-Welding Machines
UL 561 Floor Finishing Machines
UL 563 Ice Makers
UL 574 Electric Oil Heater
UL 603 Power Supplies for Use With Burglar-Alarm Systems
UL 609 Local Burglar-Alarm Units and Systems
UL 621 Ice Cream Makers
UL 632 Electrically Actuated Transmitters
UL 636 Holdup Alarm Units and Systems
UL 639 Intrusion-Detection Units
UL 651 Schedule 40 and 80 Rigid PVC Conduit
UL 651A Type EB and A Rigid PVC Conduit and HDPE Conduit
UL 664 Commercial (Class IV) Electric Dry-Cleaning Machines
UL 674 Electric Motors and Generators for Use in Hazardous (Classified) Locations
UL 676 Underwater Lighting Fixtures
UL 680 Emergency Vault Ventilators and Vault Ventilating Parts
UL 696 Electric Toys
UL 697 Toy Transformers
UL 698 Industrial Control Equipment for Use in Hazardous (Classified) Locations
UL 705 Power Ventilators
UL 710 Grease Extractors for Exhaust Ducts
UL 719 Nonmetallic Sheathed Cables
UL 726 Oil-Fired Boiler Assemblies
UL 727 Oil-Fired Central Furnaces
UL 729 Oil-Fired Floor Furnaces
UL 730 Oil-Fired Wall Furnaces
UL 731 Oil-Fired Unit Heaters
UL 732 Oil-Fired Water Heaters
UL 733 Oil-Fired Air Heaters and Direct-Fired Heaters
UL 746A Polymeric Materials—Short Term Property Evaluations
UL 746B Polymeric Materials—Long Term Property Evaluations
UL 746C Polymeric Materials—Use in Electrical Equipment Evaluations
UL 746E Polymeric Materials—Industrial Laminates, Filament Wound Tubing, Vulcanized Fibre and Materials Used in Printed Wiring Boards
UL 749 Household Dishwashers
UL 751 Vending Machines
UL 756 Coin and Currency Changers and Actuators
UL 763 Motor-Operated Commercial Food Preparing Machines
UL 773 Plug-In Locking-Type Photocontrols for Use With Area Lighting
UL 773A Nonindustrial Photoelectric Switches for Lighting Control
UL 775 Graphic Arts Equipment
UL 778 Motor-Operated Water Pumps
UL 781 Portable Electric Lighting Units for Use in Hazardous (Classified) Locations
UL 783 Electric Flashlights and Lanterns for Use in Hazardous Locations, Class I, Groups C and D
UL 795 Commercial-Industrial Gas-Heating Equipment
UL 796 Printed-Wiring Boards
UL 797 Electrical Metallic Tubing
UL 810 Capacitors
UL 813 Commercial Audio Equipment
UL 814 Gas-Tube-Sign and Ignition Cable
UL 817 Cord Sets and Power-Supply Cords
UL 823 Electric Heaters for Use in Hazardous (Classified) Locations
UL 826 Household Electric Clocks
UL 834 Heating, Water Supply, and Power Boilers—Electric
UL 842 Valves for Flammable Fluids
UL 844 Electric Lighting Fixtures for Use in Hazardous (Classified) Locations
UL 845 Electric Motor Control Centers
UL 858 Household Electric Ranges
UL 858A Safety-Related Solid-State Controls for Electric Ranges
UL 864 Service Entrance Cable
UL 857 Electric Busways and Associated Fittings
UL 858 Household Electric Ranges
UL 858A Safety-Related Solid-State Controls for Electric Ranges
UL 859 Personal Grooming Appliance
UL 863 Electric Time-Indicating and -Recording Appliances
UL 867 Electrostatic Air Cleaners
UL 869A Reference Standard for Service Equipment
UL 870 Wireways, Auxiliary Gutters, and Associated Fittings
UL 873 Electrical Temperature-Indicating and -Regulating Equipment
UL 875 Electric Dry Bath Heaters
UL 877 Circuit Breakers and Circuit-Breaker Enclosure for Use in Hazardous (Classified) Locations
UL 879 Electrode Receptacles for Gas-Tube Signs
UL 884 Underfloor Electrical Raceways and Fittings
UL 886 Electrical Outlet Boxes and Fittings for Use in Hazardous (Classified) Locations
UL 891 Dead-Front Electrical Switchboards
UL 894 Switches for Use in Hazardous (Classified) Locations
UL 896 Oil-Burning Stoves
UL 910 Test Method for Fire and Smoke Characteristics of Electrical and Optical-Fiber Cables
UL 913 Intrinsically Safe Apparatus and Associated Apparatus for Use in Class I, III and III, Division I, Hazardous (Classified) Locations
UL 916 Energy Management Equipment
UL 917 Clock-Operated Switches
UL 921 Commercial Electric Dishwashers
UL 923 Microwave Cooking Appliances
UL 924 Emergency Lighting and Power Equipment
UL 935 Fluorescent Lamp Ballasts
UL 943 Ground-Fault Circuit Interrupters
UL 961 Hobby and Sports Equipment
UL 964 Electrically Heating Bedding
UL 969 Marking and Labeling Systems

UL 977 Fused Power-Circuit Devices
UL 982 Motor-Operated Food Preparing Machines
UL 983 Surveillance Cameras
UL 984 Hermetic Refrigerant Motor-Compressors
UL 987 Stationary and Fixed Electric Tools
UL 991 Tests for Safety-Related Controls Employing Solid-State Devices
UL 998 Humidifiers
UL 1002 Electrically Operated Valve for Use in Hazardous (Classified) Locations
UL 1004 Electric Motors
UL 1005 Electric Flatirons
UL 1008 Automatic-Transfer Switches
UL 1010 Receptacle-Plug Combinations for Use in Hazardous (Classified) Locations
UL 1012 Power Supplies
UL 1017 Electric Vacuum Cleaning Machines and Blower Cleaners
UL 1018 Electric Aquarium Equipment
UL 1020 Thermal Cutoffs for Use in Electrical Appliances and Components
UL 1022 Line Isolated Monitors
UL 1026 Electric Household Cooking and Food-Serving Appliances
UL 1028 Electric Hair-Clipping and -Shaving Appliances
UL 1029 High-Intensity Discharge Lamp Ballasts
UL 1030 Sheathed Heater Elements
UL 1037 Antitheft Alarms and Devices
UL 1042 Electric Baseboard Heating Equipment
UL 1047 Isolated Power Systems Equipment
UL 1053 Ground-Fault Sensing and Relaying Equipment
UL 1054 Special-Use Switches
UL 1059 Terminal Blocks
UL 1063 Machine-Tool Wires and Cables
UL 1066 Low-Voltage AC and DC power Circuit Breakers Used in Enclosures
UL 1069 Hospital Signaling and Nurse Call Equipment
UL 1072 Medium Voltage Power Cables
UL 1076 Proprietary Burglar-Alarm Units and Systems
UL 1077 Supplementary Protectors for Use in Electrical Equipment
UL 1081 Electric Swimming Pool Pumps, Filters and Chlorinators
UL 1082 Household Electric Coffee Makers and Brewing-Type Appliances
UL 1083 Household Electric Skillets and Frying-Type Appliances
UL 1086 Household Trash Compactors
UL 1087 Molded-Case Switches
UL 1088 Temporary Lighting Strings
UL 1090 Electric Snow Movers
UL 1097 Double Insulation Systems for Use in Electrical Equipment
UL 1203 Explosion-Proof and Dust-Ignition-Proof Electrical Equipment for Use in Hazardous (Classified) Locations
UL 1206 Electric Commercial Clothes-Washing Equipment
UL 1207 Sewage Pumps for Use in Hazardous (Classified) Locations
UL 1230 Amateur Movie Lights
UL 1236 Electric Battery Chargers
UL 1238 Control Equipment for Use With Flammable Liquid Dispensing Devices
UL 1240 Electric Commercial Clothes-Drying Equipment
UL 1241 Junction Boxes for Swimming Pool Lighting Fixtures
UL 1242 Intermediate Metal Conduit
UL 1244 Electrical and Electronic Measuring and Testing Equipment
UL 1261 Electric Water Heaters for Pools and Tubs
UL 1262 Laboratory Equipment
UL 1270 Radio Receivers, Audio Systems, and Accessories
UL 1277 Electrical Power and Control Tray Cables With Optional Optical-Fiber Members
UL 1278 Movable and Wall- or Ceiling-Hung Electric Room
UL 1283 Electromagnetic-Interference Filter
UL 1286 Office Furnishings
UL 1310 Direct Plug-In Transformer Units
UL 1313 Nonmetallic Safety Cans for Petroleum Products
UL 1323 Scaffold Hoists
UL 1409 Low-Voltage Video Products Without Cathode-Ray-Tube Displays
UL 1410 Television Receivers and High-Voltage Video Products
UL 1411 Transformers and Motor Transformers for Use In Audio-, Radio-, and Television-Type Appliances
UL 1412 Fusing Resistors and Temperature-Limited Resistors for Radio-, and Television-Type Appliances
UL 1413 High-Voltage Components for Television-Type Appliances
UL 1414 Across-the-Line, Antenna-Coupling, and Line-by-Pass Capacitors for Radio- and Television-Type Appliances
UL 1416 Overcurrent and Overtemperature Protectors for Radio- and Television-Type Appliances
UL 1417 Special Fuses for Radio- and Television-Type Appliances
UL 1418 Implosion-Protected Cathode-Ray Tubes for Television-Type Appliances
UL 1419 Professional Video and Audio Equipment
UL 1424 Cables for Power-Limited Fire-Protective-Signaling Circuits
UL 1429 Pullout Switches
UL 1433 Control Centers for Changing Message Type Electric Signs
UL 1436 Outlet Circuit Testers and Similar Indicating Devices
UL 1437 Electrical Analog Instruments, Panelboard Types
UL 1441 Coated Electrical Sleeving
UL 1446 Electric Water Bed Heaters
UL 1447 Electric Lawn Mowers
UL 1448 Electric Hedge Trimmers
UL 1449 Transient Voltage Surge Suppressors
UL 1453 Electric Booster and Commercial Storage Tank Water Heaters
UL 1459 Telephone Equipment
UL 1484 Residential Gas Detectors
UL 1492 Audio and Video Equipment
UL 1557 Electrically Isolated Semiconductor Devices
UL 1558 Metal Enclosed Low-Voltage Power Circuit Breaker Switchgear
UL 1559 Insect-Control Equipment, Electrocution type
UL 1561 Large General Purpose Transformers
UL 1562 Transformers, Distribution, Dry Type—Over 600 Volts
UL 1564 Industrial Battery Chargers
UL 1565 Wire Positioning Devices
UL 1567 Receptacles and Switches Intended for Use With Aluminum Wire
UL 1569 Metal-Clad Cables
UL 1570 Fluorescent Lighting Fixtures
UL 1571 Incandescent Lighting Fixtures
UL 1572 High Intensity Discharge Lighting Fixtures
UL 1573 Stage and Studio Lighting Units
UL 1574 Track Lighting Systems
UL 1577 Optical Isolators
UL 1581 Reference Standard for Electrical Wires, Cables, and Flexible Cords
UL 1585 Class 2 and Class 3 Transformers
UL 1594 Sewing and Cutting Machines
UL 1604 Electrical Equipment for Use in Class I and II, Division 2 and Class III Hazardous (Classified) Locations
UL 1610 Central-Station Burglar-Alarm Units
UL 1635 Digital Burglar Alarm Communicator System Units
UL 1638 Visual Signaling Appliances
UL 1647 Motor-Operated Massage and Exercise Machines
UL 1651 Optical Fiber Cable
UL 1660 Liquid-Tight Flexible Nonmetallic Conduit
UL 1662 Electric Chain Saws
UL 1666 Standard Test for Flame Propagation Height of Electrical and Optical-Fiber Cables Installed Vertically in Shafts
UL 1676 Discharge Path Resistors
UL 1681 Wiring Device Configurations

UL 1690 Data-Processing Cable
UL 1727 Commercial Electric Personal Grooming Appliances
UL 1773 Termination Boxes
UL 1776 High-Pressure Cleaning Machines
UL 1778 Uninterruptible Power Supply Equipment
UL 1786 Nightlights
UL 1795 Hydromassage Bathtubs
UL 1812 Ducted Heat Recovery Ventilators
UL 1815 Nonducted Heat Recovery Ventilators
UL 1863 Communication Circuit Accessories
UL 1876 Isolating Signal and Feedback Transformers for Use in Electronic Equipment
UL 1917 Solid-State Fan Speed Controls
UL 1950 Information Technology Equipment Including Electrical Business Equipment
UL 1951 Electric Plumbing Accessories
UL 1963 Refrigerant Recovery/Recycling Equipment
UL 1993 Self-Ballasted Lamps and Lamp Adapters
UL 1995 Heating and Cooling Equipment
UL 1996 Duct Heaters
UL 2044 Commercial Closed Circuit Television Equipment
UL 2083 Halon 1301 Recovery/Recycling Equipment
UL 2097 Reference Standard for Double Insulation Systems for Use in Electronic Equipment
UL 2601–1 Medical Electrical Equipment
UL 3101–1 Electrical Equipment for Laboratory Use; Part 1: General Requirements
UL 3111–1 Electrical Measuring and Test Equipment; Part 1: General Requirements
UL 6500 Audio/Visual and Musical Instrument Apparatus for Household, Commercial, and Similar General Use
UL 8730–1 Electrical Controls for Household and Similar Use; Part 1: General Requirements

(1) These standards are approved for equipment or materials intended for use in commercial and industrial power system applications. These standards are not approved for equipment or materials intended for use in installations that are excluded from the provisions of Subpart S in 29 CFR 1910, in particular Section 1910.302(a)(2).

Note. —Testing and certification of gas operated equipment is limited to equipment for use with ''liquefied petroleum gas'' (''LPG'' or ''LP-Gas'').

Footnote ''(1)'' has been added for clarification and for consistency with similar standards that are included for the expansion request.

The designations and titles of the above test standards were current at the time of preparation of the notice of preliminary finding.

Expansion of Recognition—Additional Test Standards

OSHA limits the expansion of recognition of CSA to testing and certification of products to demonstrate compliance to the following 144 test standards. OSHA has determined that each standard meets the requirements for an appropriate test standard, within the meaning of 29 CFR 1910.7(c).

ANSI C37.09 Standard Test Procedure for AC High-Voltage Circuit Breakers Rated on a Symmetrical Current Basis (1)
ANSI C37.013 AC High-Voltage Generator Circuit Breakers Rated on a Symmetrical (1)
ANSI C37.13 Low-Voltage AC Power Circuit Breakers Used In Enclosures (1)
ANSI C37.14 Low-Voltage DC Power Circuit Breakers Used in Enclosures (1)
ANSI C37.17 Trip Devices for AC and General Purpose DC Low-Voltage Power Circuit Breakers (1)
ANSI C37.18–1979 Enclosed Field Discharge Circuit Breakers for Rotating Electric Machinery (1)
ANSI C37.29–1981 Low-Voltage AC Power Circuit Protectors Used in Enclosures (1)
ANSI C37.45 Distribution Enclosed Single-Pole Air Switches (1)
ANSI C37.47–1981 Specifications for Distribution Fuse Disconnecting Switches, Fuse Supports, and Current-Limiting Fuses (1)
ANSI C37.50 Low-Voltage AC Power Circuit Breakers Used in Enclosures—Test Procedures (1)
ANSI C37.51 Metal-Enclosed Low-Voltage AC Power Circuit-Breaker Switchgear Assemblies—Conformance Test Procedures (1)
ANSI C37.52 Low-Voltage AC Power Circuit Protectors Used in Enclosures—Test Procedures (1)
ANSI C37.53.1 High-Voltage Current Motor-Starter Fuses—Conformance Test Procedures (1)
ANSI C37.66 Oil-Filled Capacitor Switches for Alternating-Current Systems—Requirements (1)
ANSI C37.71 Three Phase, Manually Operated Subsurface Load Interrupting Switches for Alternating-Current Systems (1)
ANSI C57.13 Requirements for Instrument Transformers (1)
ANSI C57.13.2 Instrument Transformers—Conformance Test Procedures (1)
ANSI S82.02.01 Electric and Electronic Test, Measuring, Controlling, and Related Equipment: General Requirement
ANSI/NEMA 250 Enclosures for Electrical Equipment
ANSI Z21.5.1 Gas Clothes Dryers—Type 1
ANSI Z21.10.1 Gas Water Heaters—Automatic Storage Type Water Heaters with Inputs of 70,000 Btu Per Hour or Less
ANSI Z21.24 Metal Connectors for Gas Appliances
ANSI Z21.40.2–1996 Gas-Fired, Work Activated Air-Conditioning and Heat Pump Appliances (Internal Combustion)
ANSI Z21.41 Quick-Disconnect Devices for Use with Gas Fuel
ANSI Z21.50 Vented Decorative Gas Appliances
ANSI Z21.60 Decorative Gas Appliances for Installation in Vented Fireplaces
ANSI Z21.69 Connectors for Movable Gas Appliances
ANSI Z83.17 Direct Gas Fired Door Heaters
ANSI Z83.18 Direct Gas-Fired Industrial Air Heaters
FMRC 3600 Electrical Equipment for Use in Hazardous (Classified) Locations, General Requirements
FMRC 3610 Intrinsically Safe Apparatus and Associated Apparatus for Use in Class I, II and III, Division 1 Hazardous (Classified) Locations
FMRC 3611 Electrical Equipment for Use in Class I, Division 2; Class II, Division 2; and Class III, Division 1 and 2 Hazardous Locations
FMRC 3615 Explosionproof Electrical Equipment, General Requirements
FMRC 3620 Purged and Pressurized Electrical Equipment for Hazardous (Classified) Locations
FMRC 6310 Combustible Gas Detectors
UL 5A Nonmetallic Surface Raceways and Fittings
UL 5B Strut-Type Channel Raceways and Fittings
UL 96 Lightning Protection Components
UL 201 Garage Equipment
UL 218 Fire Pump Controllers
UL 234 Low Voltage Lighting Fixtures for Use in Recreational Vehicles
UL 248–1 Low-Voltage Fuses—Part 1: General Requirements
UL 248–2 Low-Voltage Fuses—Part 2: Class C Fuses
UL 248–3 Low-Voltage Fuses—Part 3: Class CA and CB Fuses
UL 248–4 Low-Voltage Fuses—Part 4: Class CC Fuses
UL 248–5 Low-Voltage Fuses—Part 5: Class G Fuses
UL 248–6 Low-Voltage Fuses—Part 6: Class H Non-Renewable Fuses

UL 248–7 Low-Voltage Fuses—Part 7: Class H Renewable Fuses
UL 248–8 Low-Voltage Fuses—Part 8: Class J Fuses
UL 248–9 Low-Voltage Fuses—Part 9: Class K Fuses
UL 248–10 Low-Voltage Fuses—Part 10: Class L Fuses
UL 248–11 Low-Voltage Fuses—Part 11: Plug Fuses
UL 248–12 Low-Voltage Fuses—Part 12: Class R Fuses
UL 248–13 Low-Voltage Fuses—Part 13: Semiconductor Fuses
UL 248–14 Low-Voltage Fuses—Part 14: Supplemental Fuses
UL 248–15 Low-Voltage Fuses—Part 15: Class T Fuses
UL 248–16 Low-Voltage Fuses—Part 16: Test Limiters
UL 252 Compressed Gas Regulators
UL 296A Waste Oil-Burning Air-Heating Appliances
UL 307A Liquid Fuel-Burning Heating Appliances for Manufactured Homes and Recreational Vehicles
UL 331 Strainers for Flammable Fluids and Anhydrous Ammonia
UL 363 Knife Switches
UL 365 Police Station Connected Burglar Alarm Units and Systems
UL 441 Gas Vents
UL 497C Protectors for Coaxial Communications Circuits
UL 536 Flexible Metallic Hose
UL 567 Pipe Connectors for Flammable and Combustible Liquids and LP-Gas
UL 569 Pigtails and Flexible Hoses
UL 588 Christmas-Tree and Decorative-Lighting Outfits
UL 634 Connectors and Switches for Use with Burglar-Alarm Systems
UL 651B Continuous Length High Density Polyethylene Conduit
UL 745–1 Portable Electric Tools
UL 745–2–1 Particular Requirements of Drills
UL 745–2–2 Particular Requirements for Screwdrivers and Impact Wrenches
UL 745–2–3 Particular Requirements for Grinders, Polishers, and Disk-Type Sanders
UL 745–2–4 Particular Requirements for Sanders
UL 745–2–5 Particular Requirements for Circular Saws and Circular Knives
UL 745–2–6 Particular Requirements for Hammers
UL 745–2–8 Particular Requirements for Shears and Nibblers
UL 745–2–9 Particular Requirements for Tappers
UL 745–2–11 Particular Requirements for Reciprocating Saws
UL 745–2–12 Particular Requirements for Concrete Vibrators
UL 745–2–14 Particular Requirements for Planers
UL 745–2–17 Particular Requirements for Routers and Trimmers
UL 745–2–30 Particular Requirements for Staplers
UL 745–2–31 Particular Requirements for Diamond Core Drills
UL 745–2–32 Particular Requirements for Magnetic Drill Presses
UL 745–2–33 Particular Requirements for Portable Bandsaws
UL 745–2–34 Particular Requirements for Strapping Tools
UL 745–2–35 Particular Requirements for Drain Cleaners
UL 745–2–36 Particular Requirements for Hand Motor Tools
UL 745–2–37 Particular Requirements for Plate Jointers
UL 854 Service Entrance Cable
UL 963 Sealing, Wrapping, and Marking Equipment
UL 1248 Engine-Generator Assemblies for Use in Recreational Vehicles
UL 1363 Temporary Power Taps
UL 1425 Cables for Non-Power-Limited Fire-Alarm Circuits
UL 1431 Personal Hygiene and Health Care Appliances
UL 1434 Thermistor-Type Devices
UL 1472 Solid-State Dimming Controls
UL 1482 Solid-Fuel Room Type Heaters
UL 1637 Home Health Care Signaling Equipment
UL 1640 Portable Power Distribution Units
UL 1653 Electrical Nonmetallic Tubing
UL 1664 Immersion-Detection Circuit-Interrupters
UL 1682 Plugs, Receptacles, and Cable Connectors, of the Pin and Sleeve Type
UL1684 Reinforced Thermosetting Resin Conduit
UL 1699 Arc-Fault Circuit-Interrupters
UL 1703 Flat Plate Photo Voltaic Modules and Panels
UL 1711 Amplifiers for Fire Protective Signaling Systems
UL 1740 Industrial Robots and Robotic Equipment
UL 1741 Static Inverters and Charge Controllers for use in Photovoltaic Power Systems
UL 1838 Low Voltage Landscape Lighting Systems
UL 1889 Commercial Filters for Cooking Oil
UL 1994 Low-Level Path Marking and Lighting Systems
UL 2021 Fixed and Location-Dedicated Electric Room Heaters
UL 2024 Optical Fiber Cable Raceway
UL 2034 Single and Multiple Station Carbon Monoxide Detectors
UL 2089 Vehicle Battery Adapters
UL 2111 Overheating Protection for Motors
UL 2125 Vehicle Battery Adapters
UL 2157 Electric Clothes Washing Machines and Extractors
UL 2158 Electric Clothes Dryers
UL 2161 Neon Transformers and Power Supplies
UL 2200 Stationary Engine Generator Assemblies
UL 2225 Metal-Clad Cables and Cable-Sealing Fittings for Use in Hazardous (Classified) Locations
UL 2250 Instrumentation Tray Cable
UL 3101–2–20 Electrical Equipment for Laboratory Use; Part 2: Laboratory Centrifuges Electrical Equipment for Laboratory Use; Part 1: General Requirements
UL 3121–1 Process Control Equipment
UL 60335–1 Safety of Household and Similar Electrical Appliances, Part 1; General Requirements
UL 60335–2–34 Household and Similar Electrical Appliances, Part 2; Particular Requirements for Motor-Compressors
UL 60730–2–10 Automatic Electrical Controls for Household and Similar Use; Part 2: Particular Requirements for Electrically-Operated Motor Starting Relays
UL 60730–2–11 Automatic Electrical Controls for Household and Similar Use; Part 2: Particular Requirements for Energy Regulators
UL 60730–2–12 Automatic Electrical Controls for Household and Similar Use; Part 2: Particular Requirements for Electrically-Operated Doors
UL 60730–2–13 Automatic Electrical Controls for Household and Similar Use; Part 2: Particular Requirements for Humidity Sensing Controls
UL 60730–2–16 Automatic Electrical Controls for Household and Similar Use; Part 2: Particular Requirements for Automatic Electrical Water Level-Operating Controls of the Float Type for Household and Similar Applications
UL 61058–1 Switch for Appliances
UL 8730–2–3 Automatic Electrical Controls for Household and Similar Use; Part 2: Particular Requirements for Thermal Motor Protectors for Ballasts for Tubular Fluorescent Lamps
UL 8730–2–4 Automatic Electrical Controls for Household and Similar Use; Part 2: Particular Requirements for Thermal Motor Protectors for Motor Compressors or Hermetic and Semi-Hermetic Type
UL 8730–2–6 Automatic Electrical Controls for Household and Similar Use; Part 2: particular Requirements for Automatic Electrical Pressure Sensing Controls Including Mechanical Requirements
UL 8730–2–7 Automatic Electrical Controls for Household and Similar

Use; Part 2: Particular Requirements for Timers and Time Switches
UL 8730–2–8 Automatic Electrical Controls for Household and Similar Use; Part 2: Particular Requirements for Electrically Operated Water Valves
UL 8730–2–9 Automatic Electrical Controls for Household and Similar Use; Part 2: Particular Requirements for Temperature Sensing Controls
UL 8730–2–14 Automatic Electrical Controls for Household and Similar Use; Part 2: Particular Requirements for Electric Actuators

(1) These standards are approved for equipment or materials intended for use in commercial and industrial power system applications. These standards are not approved for equipment or materials intended for use in installations that are excluded from the provisions of Subpart S in 29 CFR 1910, in particular Section 1910.302(a)(2).

Note.— Testing and certification of gas operated equipment is limited to equipment for use with ''liquefied petroleum gas'' (''LPG'' or ''LP-Gas'').

The designations and titles of the above test standards were current at the time of the preparation of the notice of the preliminary finding.

Many of the test standards listed above and under the renewal section are approved as American National Standards by the American National Standards Institute (ANSI). However, for convenience in compiling the list, we show the designation of the standards developing organization (e.g., UL 1950) for the standard, as opposed to the ANSI designation (e.g., ANSI/UL 1950). Under our procedures, an NRTL recognized for an ANSI-approved test standard may use either the latest proprietary version of the test standard or the latest ANSI version of that standard, regardless of which version appears in its list of test standards. Contact ANSI or the ANSI web site *(www.ansi.org)* and click ''NSSN'' to find out whether or not a standard is currently ANSI-approved.

Conditions

The Canadian Standards Association must also abide by the following conditions of the recognition, in addition to those already required by 29 CFR 1910.7:

OSHA must be allowed access to the CSA facilities and records for purposes of ascertaining continuing compliance with the terms of its recognition and to investigate as OSHA deems necessary;

If CSA has reason to doubt the efficacy of any test standard it is using under this program, it must promptly inform the organization that developed the test standard of this fact and provide that organization with appropriate relevant information upon which its concerns are based;

CSA must not engage in or permit others to engage in any misrepresentation of the scope or conditions of its recognition. As part of this condition, CSA agrees that it will allow no representation that it is either a recognized or an accredited Nationally Recognized Testing Laboratory (NRTL) without clearly indicating the specific equipment or material to which this recognition is tied, or that its recognition is limited to certain products;

CSA must inform OSHA as soon as possible, in writing, of any change of ownership, facilities, or key personnel, and of any major changes in its operations as an NRTL, including details;

CSA will continue to meet all the terms of its recognition and will always comply with all OSHA policies pertaining to this recognition; and

CSA will continue to meet the requirements for recognition in all areas where it has been recognized.

Signed at Washington, D.C. this 15 day of June, 2001.

R. Davis Layne,

Acting Assistant Secretary.

[FR Doc. 01–16671 Filed 7–2–01; 8:45 am]

BILLING CODE 4510–26–P

DEPARTMENT OF LABOR

Occupational Safety and Health Administration

[Docket No. NRTL2–93]

Entela, Inc., Renewal of Recognition

AGENCY: Occupational Safety and Health Administration (OSHA), Labor.

ACTION: Notice.

SUMMARY: This notice announces the Agency's final decision on the application of Entela, Inc., for renewal of its recognition as a Nationally Recognized Testing Laboratory (NRTL) under 29 CFR 1910.7.

EFFECTIVE DATE: This renewal becomes effective on July 3, 2001 and will be valid until July 3, 2006, unless terminated or modified prior to that date, in accordance with 29 CFR 1910.7.

FOR FURTHER INFORMATION CONTACT: Bernard Pasquet, Office of Technical Programs and Coordination Activities, NRTL Program, Occupational Safety and Health Administration, U.S. Department of Labor, 200 Constitution Avenue, NW, Room N3653, Washington, D.C. 20210, or phone (202) 693–2110.

SUPPLEMENTARY INFORMATION:

Notice of Final Decision

The Occupational Safety and Health Administration (OSHA) hereby gives notice of the renewal of recognition of Entela, Inc. (ENT), as a Nationally Recognized Testing Laboratory (NRTL). ENT's renewal covers its existing scope of recognition, which may be found in OSHA's informational web page for the NRTL (http://www.osha-slc.gov/dts/otpca/nrtl/ent.html).

OSHA recognition of an NRTL signifies that the organization has met the legal requirements in Section 1910.7 of Title 29, Code of Federal Regulations (29 CFR 1910.7). Recognition is an acknowledgment that the organization can perform independent safety testing and certification of the specific products covered within its scope of recognition and is not a delegation or grant of government authority. As a result of recognition, employers may use products ''properly certified'' by the NRTL to meet OSHA standards that require testing and certification.

The Agency processes applications by an NRTL for initial recognition or for expansion or renewal of this recognition following requirements in Appendix A to 29 CFR 1910.7. This appendix requires that the Agency publish two notices in the **Federal Register** in processing an application. In the first notice, OSHA announces the application and provides its preliminary finding, and in the second notice, the Agency provides its final decision on the application. These notices set forth the NRTL's scope of recognition or modifications of that scope.

Entela, Inc., was originally founded in 1974 as a Michigan Corporation specializing in structural steel inspection. In 1981, equipment and personnel were added to initiate an in-house materials laboratory. This was followed by a formation of certification programs within Entela, Inc. The original company was founded as Entel Engineering Services.

Entela received its recognition as an NRTL on July 26, 1994 (59 FR 37997), for a period of five years ending July 26, 1999. Appendix A to 29 CFR 1910.7 stipulates that the period of recognition of an NRTL is five years and that an NRTL may renew its recognition by applying not less than nine months, nor more than one year, before the expiration date of its current recognition. Entela submitted a request to renew its recognition on August 10, 1998 (see Exhibit 15), within the time allotted, and retains its recognition pending OSHA's final decision in this renewal process.

OSHA published the required notice in the **Federal Register** on March 16, 2001 (66 FR 15288) to announce ENT's renewal request. This notice included a preliminary finding that ENT could meet the requirements in 29 CFR 1910.7 for renewal of its recognition and invited public comment by April 2, 2001. OSHA received no comments concerning this notice.

In processing ENT's request, OSHA performed an on-site review (audit) of ENT's NRTL facilities listed below. NRTL Program assessment staff reviewed information from these reviews and, in a memo dated October 6, 2000 (see Exhibit 20), recommended the renewal of ENT's recognition.

The following is a chronology of the other **Federal Register** notices published by OSHA concerning Entela's recognition, all of which involved an expansion of recognition for additional sites, standards, or programs: a request announced on February 21, 1997 (62 FR 8041) and granted on May 22, 1997 (62 FR 28066); and a request announced on April 17, 1998 (63 FR 19275) and granted on July 10, 1998 (63 FR 37416). OSHA also published a correction of recognition on July 13, 1999 (64 FR 37815).

You may obtain or review copies of all public documents pertaining to the ENT application by contacting the Docket Office, Occupational Safety and Health Administration, U.S. Department of Labor, 200 Constitution Avenue, NW, Room N2625, Washington, D.C. 20210. You should refer to Docket No. NRTL2–93, the permanent record of public information on the ENT recognition.

The current addresses of the ENT testing facilities recognized by OSHA are: Entela, Inc., 3033 Madison, S.E., Grand Rapids, Michigan 49548, Entela Taiwan Laboratories, 3F No. 260 262 Wen, Lin North Road, Pei Tou, Taipei, Taiwan.

Programs and Procedures

The renewal of recognition includes ENT's continued use of the supplemental programs listed below, based upon the criteria detailed in the March 9, 1995 **Federal Register** notice (60 FR 12980). This notice lists nine (9) programs and procedures (collectively, programs), eight of which (called supplemental programs) an NRTL may use to control and audit, but not actually to generate, the data relied upon for product certification. An NRTL's initial recognition will always include the first or basic program, which requires that all product testing and evaluation be performed in-house by the NRTL that will certify the product. OSHA previously granted ENT recognition to use these programs, which are listed, as shown below, in OSHA's informational web page on the ENT recognition (http://www.osha-slc.gov/dts/otpca/nrtl/ent.html).

Program 2: Acceptance of testing data from independent organizations, other than NRTLs.

Program 3: Acceptance of product evaluations from independent organizations, other than NRTLs.

Program 4: Acceptance of witnessed testing data.

Program 5: Acceptance of testing data from non-independent organizations.

Program 6: Acceptance of evaluation data from non-independent organizations (requiring NRTL review prior to marketing).

Program 7: Acceptance of continued certification following minor modifications by the client.

Program 8: Acceptance of product evaluations from organizations that function as part of the International Electrotechnical Commission Certification Body (IEC–CB) Scheme.

Program 9: Acceptance of services other than testing or evaluation performed by subcontractors or agents.

OSHA developed these programs to limit how an NRTL may perform certain aspects of its work and to accept the activities covered under a program only when the NRTL meets certain criteria. In this sense, they are special conditions that the Agency places on an NRTL's recognition. OSHA does not consider these programs in determining whether an NRTL meets the requirements for recognition under 29 CFR 1910.7. However, these programs help to define the scope of that recognition.

Final Decision and Order

The NRTL Program staff has examined the applications, the audit reports, and other pertinent information. Based upon this examination and the assessor's recommendation, OSHA finds that Entela, Inc., has met the requirements of 29 CFR 1910.7 for renewal of its NRTL recognition. The renewal applies to the sites listed above. In addition, it covers the test standards listed below, and it is subject to limitations and conditions, also listed below. Pursuant to the authority in 29 CFR 1910.7, OSHA hereby renews the recognition of ENT, subject to these limitations and conditions.

Limitations; Renewal of Recognition of Facilities

OSHA limits the renewal of recognition of ENT to the 2 sites listed above. In addition, similar to other NRTLs that operate multiple sites, the Agency's recognition of any ENT testing site is limited to performing testing to the test standards for which OSHA has recognized ENT, and for which the site has the proper capability and control programs.

The following limitations currently apply to the recognition of the Taiwan facility, and continue to apply for the renewal:

a. The Taiwan facility shall be limited to carrying out minor mechanical and electrical testing of instruments and small appliances.

b. Performance of inspections shall be limited to Entela personnel.

Renewal of Recognition of Test Standards

OSHA further limits the renewal of recognition of ENT to testing and certification of products to demonstrate conformance to the test standards listed below (see Listing of Test Standards). OSHA has determined that each test standard meets the requirements for an appropriate test standard, within the meaning of 29 CFR 1910.7(c). Some of the test standards for which OSHA previously recognized ENT were no longer appropriate at the time of preparation of the preliminary notice, primarily because they had been withdrawn by the standards developing organization. As a result, we have excluded these test standards in the listing below. However, under OSHA policy, the NRTL may request recognition for comparable test standards, i.e., other appropriate test standards covering similar type of product testing. Since a number of NRTLs are affected by such withdrawn standards, OSHA will publish a separate notice to make the appropriate substitutions for ENT and other NRTLs that were recognized for these standards. The Agency has contacted these NRTLs regarding this matter.

This current notice includes all of OSHA's current limitations on ENT with regard to the standards listed below. These limitations appear at the end of the list of standards, and standards to which a specific limitation applies are denoted by the use of asterisks.

The Agency's recognition of ENT, or any other NRTL, for a particular test standard is always limited to equipment or materials (products) for which OSHA standards require third party testing and certification before use in the workplace. An NRTL's scope of recognition excludes any product(s) falling within the scope of the test standard for which OSHA has no testing and certification requirements.

Listing of Test Standards

UL 22 Amusement and Gaming Machines
UL 45 Portable Electric Tools
UL 48 Electric Signs
UL 50 Electric Cabinets and Boxes
UL 67 Electric Panelboards
UL 73 Motor-Operated Appliances
UL 82 Electric Gardening Appliances
UL 94 Tests for Flammability of Plastic Materials for Parts in Devices and Appliances*
UL 98 Enclosed and Dead-Front Switches
UL 122 Photographic Equipment
UL 130 Electric Heating Pads
UL 141 Garment Finishing Appliances
UL 153 Portable Electric Lamps
UL 174 Household Electric Storage-Tank Water Heaters
UL 187 X-Ray Equipment
UL 197 Commercial Electric Cooking Appliances
UL 213 Rubber Gasketed Fittings for Fire Protection Service
UL 244A Solid State Controls for Appliances
UL 250 Household Refrigerators and Freezers
UL 298 Portable Electric Hand Lamps
UL 325 Door, Drapery, Louver, and Window Operators and Systems
UL 353 Limit Controls
UL 355 Cord Reels
UL 429 Electrically Operated Valves
UL 467 Grounding and Bonding Equipment
UL 469 Musical Instruments and Accessories
UL 471 Commercial Refrigerators and Freezers
UL 482 Portable Sun/Heat Lamps
UL 484 Room Air Conditioners
UL 496 Edison-Base Lampholders
UL 499 Electric Heating Appliances
UL 506 Specialty Transformers
UL 507 Electric Fans
UL 508 Electric Industrial Control Equipment**
UL 541 Refrigerated Vending Machines
UL 542 Lampholders, Starters, and Starter Holders for Fluorescent Lamps
UL 544 Electric Medical and Dental Equipment
UL 563 Ice Makers
UL 609 Local Burglar-Alarm Units and Systems
UL 696 Electric Toys
UL 745–1 Portable Electric Tools
UL 745–2–1 Drills
UL 745–2–2 Screwdrivers and Impact Wrenches
UL 745–2–3 Grinders, Polishers and Disk-type Sanders
UL 745–2–4 Sanders
UL 745–2–5 Circular Saws and Circular Knives
UL 745–2–6 Hammers
UL 745–2–8 Shears and Nibblers
UL 745–2–9 Tappers
UL 745–2–11 Reciprocating Saws
UL 745–2–12 Concrete Vibrators
UL 745–2–14 Planers
UL 745–2–17 Routers and Trimmers
UL 745–2–30 Staplers
UL 745–2–31 Diamond Core Drills
UL 745–2–32 Magnetic Drill Press
UL 745–2–33 Portable Bandsaws
UL 745–2–34 Strapping Tools
UL 745–2–35 Drain Cleaners
UL 745–2–36 Hand Motor Tools
UL 745–2–37 Plate Joiners
UL 749 Household Dishwashers
UL 751 Vending Machines
UL 756 Coin and Currency Changers and Actuators
UL 763 Motor Operated Commercial Food Preparing Machines
UL 778 Motor-Operated Water Pumps
UL 796 Printed-Wiring Boards
UL 813 Commercial Audio Equipment
UL 817 Cord Sets & Power-Supply Cords
UL 826 Household Electric Clocks
UL 858 Household Electric Ranges
UL 859 Household Electric Personal Grooming Appliances
UL 863 Time-Indicating and Recording Appliance
UL 867 Electrostatic Air Cleaners
UL 869A Reference Standard for Service Equipment
UL 873 Temperature-Indicating and Regulating Equipment
UL 916 Energy Management Equipment
UL 917 Clock Operated Switches
UL 921 Commercial Electric Dishwashers
UL 923 Microwave Cooking Appliances
UL 924 Emergency Lighting and Power Equipment
UL 935 Fluorescent-Lamp Ballasts
UL 961 Electric Hobby and Sports Equipment
UL 969 Marking and Labeling Systems
UL 982 Motor Operated Household Food Preparing Machines
UL 984 Hermetic Refrigerant Motor-Compressors
UL 987 Stationary and Fixed Electric Tools
UL 998 Humidifiers
UL 1004 Electric Motors * * *
UL 1005 Electric Flatirons
UL 1008 Transfer Switch Equipment
UL 1012 Power Units Other Than Class 2
UL 1018 Electric Aquarium Equipment
UL 1026 Electric Household Cooking and Food-Serving Equipment
UL 1028 Hair Clipping and Shaving Appliances
UL 1029 High-Intensity Discharge Lamp Ballasts
UL 1042 Electric Baseboard Heating Equipment
UL 1069 Hospital Signaling and Nurse-Call System
UL 1082 Household Electric Coffee Makers and Brewing-Type Appliances
UL 1083 Household Electric Skillets and Frying Type Appliances
UL 1086 Household Trash Compactors
UL 1088 Temporary Lighting Strings
UL 1206 Electric Commercial Clothes Washing Machines
UL 1230 Amateur Movie Lights
UL 1236 Battery Chargers For Charging Engine-Starter Batteries
UL 1244 Electrical and Electronic Measuring and Testing Equipment
UL 1261 Electric Water Heaters for Pools and Tubs
UL 1262 Laboratory Equipment
UL 1270 Radio Receivers, Audio Systems, and Accessories
UL 1286 Office Furnishings
UL 1310 Class 2 Power Units
UL 1410 Television Receivers and High-Voltage Video Products
UL 1418 Cathode-Ray Tubes
UL 1431 Personal Hygiene and Health Care Appliances
UL 1433 Control Centers for Changing Message Type Electric Signs
UL 1445 Electric Water Bed Heaters
UL 1447 Electric Lawn Mowers
UL 1448 Electric Hedge Trimmers
UL 1459 Telephone Equipment
UL 1472 Solid-State Dimming Controls
UL 1492 Audio-Video Products & Accessories
UL 1564 Industrial Battery Chargers
UL 1570 Fluorescent Lighting Fixtures
UL 1571 Incandescent Lighting Fixtures
UL 1572 High Intensity Discharge Lighting Fixtures
UL 1573 Stage and Studio Lighting Units
UL 1574 Track Lighting Systems
UL 1585 Class 2 and Class 3 Transformers
UL 1594 Sewing and Cutting Machines
UL 1638 Visual Signaling Appliances
UL 1647 Motor-Operated Massage and Exercise Machines
UL 1727 Commercial Electric Personal Grooming Appliances
UL 1786 Nightlights
UL 1838 Low Voltage Landscape Lighting Systems
UL 1950 Information Technology Equipment Including Electrical Business Equipment
UL 1993 Self-Ballasted Lamps and Lamp Adapters
UL 2044 Commercial Closed Circuit Television Equipment
UL 2157 Electric Clothes Washing Machines and Extractors
UL 2161 Neon Transformers and Power Supplies

UL 2601–1 Medical Electrical Equipment, Part 1: General Requirements for Safety
UL 3044 Surveillance Closed Circuit Television Equipment
UL 3101–1 Electric Equipment for Laboratory Use, Part 1, General
UL 3111–1 Electrical Measuring and Test Equipment, Part 1: General
UL 6500 Audio/Video and Musical Instrument Apparatus for Household, Commercial, and Similar General Use
UL 8730–1 Electrical Controls for Household and Similar Use; Part 1: General Requirements
UL 8730–2–3 Automatic Electrical Controls for Household and Similar Use; Part 2: Particular Requirements for Thermal Motor Protectors for Ballasts for TubuLar Fluorescent Lamps
UL 8730–2–4 Automatic Electrical Controls for Household and Similar Use; Part 2: Particular Requirements for Thermal Motor Protectors for Motor Compressors or Hermetic and Semi-Hermetic Type
UL 8730–2–8 Automatic Electrical Controls for Household and Similar Use; Part 2: Particular Requirements for Electrically Operated Water Valves

*Exclusive of radiant panel testing.
**Limited to equipment of no greater than 500 amperes.
***Limited to motors rated no greater than one-half horsepower.

Note: Testing and certification of gas operated equipment is limited to equipment for use with ''liquefied petroleum gas'' (''LPG'' or ''LP-Gas'').

The designations and titles of the above test standards were current at the time of the preparation of the notice of the preliminary finding.

Many of the test standards listed above are approved as American National Standards by the American National Standards Institute (ANSI). However, for convenience in compiling the list, we show the designation of the standards developing organization (e.g., UL 1950) for the standard, as opposed to the ANSI designation (e.g., ANSI/UL 1950). Under our procedures, an NRTL recognized for an ANSI-approved test standard may use either the latest proprietary version of the test standard or the latest ANSI version of that standard, regardless of which version appears in its list of test standards. Contact ANSI or the ANSI web site (*www.ansi.org*) and click ''NSSN'' to find out whether or not a standard is currently ANSI-approved.

None of the above standards had been withdrawn by the standards developing organization (SDO) at the time of the preparation of the notice of preliminary finding.

Conditions

Entela, Inc. must also abide by the following conditions of the recognition, in addition to those already required by 29 CFR 1910.7:

OSHA must be allowed access to the ENT facilities and records for purposes of ascertaining continuing compliance with the terms of its recognition and to investigate as OSHA deems necessary;

If ENT has reason to doubt the efficacy of any test standard it is using under this program, it must promptly inform the organization that developed the test standard of this fact and provide that organization with appropriate relevant information upon which its concerns are based;

ENT must not engage in or permit others to engage in any misrepresentation of the scope or conditions of its recognition. As part of this condition, ENT agrees that it will allow no representation that it is either a recognized or an accredited Nationally Recognized Testing Laboratory (NRTL) without clearly indicating the specific equipment or material to which this recognition is tied, or that its recognition is limited to certain products;

ENT must inform OSHA as soon as possible, in writing, of any change of ownership, facilities, or key personnel, and of any major changes in its operations as an NRTL, including details;

ENT will continue to meet all the terms of its recognition and will always comply with all OSHA policies pertaining to this recognition; and

ENT will continue to meet the requirements for recognition in all areas where it has been recognized.

Signed at Washington, D.C. this 15 day of June, 2001.

R. Davis Layne,

Acting Assistant Secretary.

[FR Doc. 01–16670 Filed 7–2–01; 8:45 am]

BILLING CODE 4510–26–P

THE NATIONAL FOUNDATION ON THE ARTS AND THE HUMANITIES

Meetings of Humanities Panel

AGENCY: The National Endowment for the Humanities.

ACTION: Notice of Meetings.

SUMMARY: Pursuant to the provisions of the Federal Advisory Committee Act (Public Law 92–463, as amended), notice is hereby given that the following meetings of the Humanities Panel will be held at the Old Post Office, 1100 Pennsylvania Avenue, NW., Washington, DC 20506.

FOR FURTHER INFORMATION CONTACT: Laura S. Nelson, Advisory Committee Management Officer, National Endowment for the Humanities, Washington, DC 20506; telephone (202) 606–8322. Hearing-impaired individuals are advised that information on this matter may be obtained by contacting the Endowment's TDD terminal on (202) 606–8282.

SUPPLEMENTARY INFORMATION: The proposed meetings are for the purpose of panel review, discussion, evaluation and recommendation on applications for financial assistance under the National Foundation on the Arts and the Humanities Act of 1965, as amended, including discussion of information given in confidence to the agency by the grant applicants. Because the proposed meetings will consider information that is likely to disclose trade secrets and commercial or financial information obtained from a person and privileged or confidential and/or information of a personal nature the disclosure of which would constitute a clearly unwarranted invasion of personal privacy, pursuant to authority granted me by the Chairman's Delegation of Authority to Close Advisory Committee meetings, dated July 19, 1993, I have determined that these meetings will be closed to the public pursuant to subsections (c) (4), and (6) of section 552b of Title 5, United States Code.

1. *Date:* July 10, 2001.
Time: 8:30 a.m. to 6:00 p.m.
Room: 415.
Program: This meeting will review applications for Colleges, Universities, Other Educational Organizations I, submitted to the Office of Challenge Grants at the May 1, 2001 deadline.

2. *Date:* July 17, 2001.
Time: 8:30 a.m. to 6:00 p.m.
Room: 420.
Program: This meeting will review applications for History Museums, Historical Societies, Historic Sites, submitted to the Office of Challenge Grants at the May 1, 2001 deadline.

3. *Date:* July 17, 2001.
Time: 8:30 a.m. to 5:00 p.m.
Room: 315.
Program: This meeting will review applications for American History, submitted to the Division of Research Programs at the May 1, 2001 deadline.

4. *Date:* July 18, 2001.
Time: 8:30 a.m. to 5:00 p.m.
Room: 315.
Program: This meeting will review applications for History of Science and Medicine, submitted to the Division of Research Programs at the May 1, 2001 deadline.

5. *Date:* July 18, 2001.
Time: 8:30 a.m. to 5:00 p.m.
Room: 415.
Program: This meeting will review applications for Music and Dance, submitted to the Division of Research Programs at the May 1, 2001 deadline.

6. *Date:* July 19, 2001.
Time: 8:30 a.m. to 5:00 p.m.
Room: 315.
Program: This meeting will review applications for Religious Studies, submitted to the Division of Research Programs at the May 1, 2001 deadline.

7. *Date:* July 19, 2001.
Time: 8:30 a.m. to 5:00 p.m.
Room: 415.
Program: This meeting will review applications for American and Latin American Literature, submitted to the Division of Research Programs at the May 1, 2001 deadline.

8. *Date:* July 20, 2001.
Time: 8:30 a.m. to 5:00 p.m.
Room: 315.
Program: This meeting will review applications for Philosophy, submitted to the Division of Research Programs at the May 1, 2001 deadline.

9. *Date:* July 20, 2001.
Time: 8:30 a.m. to 6:00 p.m.
Room: 420.
Program: This meeting will review applications for Colleges, Universities, Other Educational Organizations II, submitted to the Office of Challenge Grants at the May 1, 2001 deadline.

10. *Date:* July 23, 2001.
Time: 8:30 a.m. to 5:00 p.m.
Room: 315.
Program: This meeting will review applications for European History, submitted to the Division of Research Programs at the May 1, 2001 deadline.

11. *Date:* July 23, 2001.
Time: 8:30 a.m. to 5:00 p.m.
Room: 415.
Program: This meeting will review applications for Latin American History and Studies, submitted to the Division of Research Programs at the May 1, 2001 deadline.

12. *Date:* July 24, 2001.
Time: 8:30 a.m. to 5:00 p.m.
Room: 315.
Program: This meeting will review applications for Anthropology and Archaeology, submitted to the Division of Research Programs at the May 1, 2001 deadline.

13. *Date:* July 24, 2001.
Time: 8:30 a.m. to 6:00 p.m.
Room: 420.
Program: This meeting will review applications for Art, Anthropology, Cultural Organizations, submitted to the Office of Challenge Grants at the May 1, 2001 deadline.

14. *Date:* July 25, 2001.
Time: 8:30 a.m. to 5:00 p.m.
Room: 415.
Program: This meeting will review applications for American History, submitted to the Division of Research Programs at the May 1, 2001 deadline.

15. *Date:* July 26, 2001.
Time: 8:30 a.m. to 5:00 p.m.
Room: 315.
Program: This meeting will review applications for East Asian Studies, submitted to the Division of Research Programs at the May 1, 2001 deadline.

16. *Date:* July 27, 2001.
Time: 8:30 a.m. to 5:00 p.m.
Room: 315.
Program: This meeting will review applications for British Literature, submitted to the Division of Research Programs at the May 1, 2001 deadline.

17. *Date:* July 30, 2001.
Time: 8:30 a.m. to 5:00 p.m.
Room: 315.
Program: This meeting will review applications for British Literature, submitted to the Division of Research Programs at the May 1, 2001 deadline.

18. *Date:* July 31, 2001.
Time: 8:30 a.m. to 5:00 p.m.
Room: 315.
Program: This meeting will review applications for Political Science, International Affairs, and Jurisprudence, submitted to the Division of Research Programs at the May 1, 2001 deadline.

Laura S. Nelson,
Advisory Committee Management Officer.

[FR Doc. 01–16623 Filed 7–2–01; 8:45 am]
BILLING CODE 7536–01–M

NUCLEAR REGULATORY COMMISSION

[Docket No. 50–247]

Consolidated Edison Company of New York, Inc.; Indian Point Nuclear Generating Unit No. 2; Environmental Assessment and Finding of No Significant Impact

The U.S. Nuclear Regulatory Commission (NRC) is considering issuance of an amendment to Facility Operating License No. DPR–26, issued to Consolidated Edison Company of New York, Inc., (the licensee), for operation of the Indian Point Nuclear Generating Unit No. 2, located in Westchester County, New York.

Environmental Assessment

Identification of the Proposed Action

The proposed action would revise the facility Technical Specifications (TSs) to correct various editorial errors and make other administrative changes.

The proposed action is in accordance with the licensee's application for amendment dated February 14, 2000, as supplemented by letter dated May 3, 2001.

The Need for the Proposed Action

The proposed action corrects various editorial errors and makes other administrative changes in the TSs. Specifically, the amendment makes administrative changes that revise: (a) TS Tables 3.6–1 and 4.4–1 to correct listing and editorial errors, (b) TS 3.8.B.10 to reflect the wording in 10 CFR 50.54(m)(2)(iv), (c) Figures 3.10–2 through 3.10–6 to remove these figures, (d) Table 4.1–1 to reflect change in level indication components, (e) TS 4.19.B and 6.14.1.1 to correct editorial errors, (f) TS 6.12.1 to reflect an organizational title change, and (g) TS 6.13.2 to correct a typographical error. In its May 3 letter, the licensee requested that the proposed changes to TS 6.12.1 regarding references to the current sections of 10 CFR Part 20 be withdrawn.

Environmental Impacts of the Proposed Action

The NRC has completed its evaluation of the proposed action and concludes that the administrative and editorial changes correct errors that currently exist in the TSs. The proposed action does not modify the facility or affect the manner in which the facility is operated.

The proposed action will not significantly increase the probability or consequences of accidents, no changes are being made in the types of any effluents that may be released off site, and there is no significant increase in occupational or public radiation exposure. Therefore, there are no significant radiological environmental impacts associated with the proposed action.

With regard to potential nonradiological impacts, the proposed action does not involve any historic sites. It does not affect nonradiological plant effluents and has no other environmental impact. Therefore, there are no significant nonradiological environmental impacts associated with the proposed action.

Accordingly, the NRC concludes that there are no significant environmental impacts associated with the proposed action.

Alternatives to the Proposed Action

As an alternative to the proposed action, the staff considered denial of the proposed action (i.e., the ''no-action'' alternative). Denial of the application would result in no change in current environmental impacts. The environmental impacts of the proposed action and the alternative action are similar.

Alternative Use of Resources

This action does not involve the use of any resources not previously considered in the Final Environmental

Statement for the Indian Point Nuclear Generating Unit No. 2.

Agencies and Persons Consulted

In accordance with its stated policy, on June 26, 2001, the staff consulted with the New York State official, Mr. John P. Spath of the Energy Research and Development Authority, regarding the environmental impact of the proposed action. The State official had no comments.

Finding of No Significant Impact

On the basis of the environmental assessment, the NRC concludes that the proposed action will not have a significant effect on the quality of the human environment. Accordingly, the NRC has determined not to prepare an environmental impact statement for the proposed action.

For further details with respect to the proposed action, see the licensee's letter dated February 14, 2000, as supplemented by letter dated May 3, 2001. Documents may be examined, and/or copied for a fee, at the NRC's Public Document Room, located at One White Flint North, 11555 Rockville Pike (first floor), Rockville, Maryland. Publicly available records will be accessible electronically from the Agencywide Documents Access and Management Systems (ADAMS) Public Electronic Reading Room on the Internet at the NRC web site, *http://www.nrc.gov/NRC/ADAMS/index.html*. If you do not have access to ADAMS or if there are problems in accessing the documents located in ADAMS, contact the NRC Public Document Room (PDR) Reference staff at 1–800–397–4209, 301–415–4737 or by email to *pdr@nrc.gov.*

Dated at Rockville, Maryland, this 27th day of June 2001.

For the Nuclear Regulatory Commission.

Richard P. Correia,

Acting Chief, Section 1, Project Directorate I, Division of Licensing Project Management, Office of Nuclear Reactor Regulation.

[FR Doc. 01–16654 Filed 7–2–01; 8:45 am]

BILLING CODE 7590–01–P

NUCLEAR REGULATORY COMMISSION

[Docket Nos. 50–250 and 50–251]

Florida Power and Light Company Turkey Point Units 3 and 4; Notice of Extension of the Public Comment Period for the Environmental Impact Statement for the License Renewal of Turkey Point Units 3 and 4

Notice is hereby given that the U.S. Nuclear Regulatory Commission (the Commission) has extended the public comment period for the draft plant-specific supplement to the Generic Environmental Impact Statement (GEIS), NUREG–1437, regarding the renewal of operating licenses DPR–31 and DPR–41 for an additional 20 years of operation at Turkey Point Units 3 and 4 (Turkey Point).

The draft supplement to the GEIS is available electronically for public inspection in the NRC Public Document Room located at One White Flint North, 11555 Rockville Pike (first floor), Rockville, Maryland, or from the Publicly Available Records (PARS) component of NRC's document system (ADAMS). ADAMS is accessible from the NRC Web site at *http://www.nrc.gov/NRC/ADAMS/index.html* (the Public Electronic Reading Room). In addition, the Homestead Branch Library, located at 700 North Homestead Boulevard, Homestead, Florida, has agreed to make the draft supplement to the GEIS available for public inspection.

Any interested party may submit comments on the draft supplement to the GEIS for consideration by the NRC staff. To be certain of consideration, comments on the draft supplement to the GEIS and the proposed action must be received by September 6, 2001. Comments received after the due date will be considered if it is practical to do so, but the NRC staff is able to assure consideration only for comments received on or before this date. Written comments on the draft supplement to the GEIS should be sent to: Chief, Rules and Directives Branch, Division of Administrative Services, Office of Administration, Mailstop T–6D 59, U.S. Nuclear Regulatory Commission, Washington, D.C. 20555–0001. Comments may be hand-delivered to the NRC at 11545 Rockville Pike, Rockville, Maryland, between 7:45 a.m. and 4:15 p.m. on Federal workdays. Submittal of electronic comments may be sent by the Internet to the NRC at TurkeyPointEIS@nrc.gov. All comments received by the Commission, including those made by Federal, State, and local agencies, Indian tribes, or other interested persons, will be made available electronically at the Commission's Public Document Room in Rockville, Maryland or from the PARS component of (ADAMS).

The NRC staff will hold public meetings to present an overview of the draft plant-specific supplement to the GEIS and to accept public comments on the document. The public meetings will be held at the Harris Field Complex—Homestead YMCA, 1034 Northeast 8th Street, Homestead, Florida, on July 17, 2001. There will be two meeting sessions to accommodate interested parties. The first session will commence at 1:30 p.m. and will continue until 4:30 p.m. The second session will commence at 7:00 p.m. and will continue until 10:00 p.m. Both meeting sessions will be transcribed and will include (1) a presentation of the contents of the draft plant-specific supplement to the GEIS, and (2) the opportunity for interested government agencies, organizations, and individuals to provide comments on the draft report. Additionally, the NRC staff will host informal discussions one hour prior to the start of each session at the Homestead YMCA. No comments on the draft plant-specific GEIS will be accepted during the informal discussions. To be considered, comments must be provided either at the transcribed public meetings or in writing, as discussed above. Persons may pre-register to attend or present oral comments at the meeting by contacting Mr. James H. Wilson by telephone at 1–800–368–5642, extension 1108, or by Internet to the NRC at TurkeyPointEIS@nrc.gov no later than July 12, 2001. Members of the public may also register to provide oral comments within 15 minutes of the start of each session. Individual oral comments may be limited by the time available, depending on the number of persons who register. If special equipment or accommodations are needed to attend or present information at the public meeting, the need should be brought to Mr. Wilson's attention no later than July 12, 2001, to provide the NRC staff adequate notice to determine whether the request can be accommodated.

FOR FURTHER INFORMATION CONTACT: Mr. James H. Wilson, Generic Issues, Environmental, Financial, and Rulemaking Branch, Division of Regulatory Improvement Programs, U.S. Nuclear Regulatory Commission, Washington, D.C. 20555. Mr. Wilson may be contacted at the aforementioned telephone number or e-mail address.

Dated at Rockville, Maryland, this 27th day of June 2001.

For the Nuclear Regulatory Commission.

David B. Matthews,

Director, Division of Regulatory Improvement Programs, Office of Nuclear Reactor Regulation.

[FR Doc. 01–16655 Filed 7–2–01; 8:45 am]

BILLING CODE 7590–01–P

NUCLEAR REGULATORY COMMISSION

Licensing Support Network; Advisory Review Panel

AGENCY: Nuclear Regulatory Commission.

ACTION: Notice of public meeting.

SUMMARY: The Licensing Support Network Advisory Review Panel (LSNARP) will hold its next meeting on Wednesday, August 8, 2001, at the Crowne Plaza Hotel located at 4255 South Paradise Road, Las Vegas, Nevada 89109. The meeting will be open to the public pursuant to the Federal Advisory Committee Act (Pub. L. 94–463, 86 Stat. 770–776).

Agenda: The meeting will be held from 8:30 a.m. to 5:00 p.m. on Wednesday, August 8, 2001. The purpose of the meeting is to discuss issues concerning the design and operation of the Licensing Support Network (LSN). The LSN is an internet based electronic discovery database being developed to aid the NRC in complying with the schedule for decision on the construction authorization for the high-level waste repository contained in Section 114(d) of the Nuclear Waste Policy Act of 1982, as amended.

SUPPLEMENTARY INFORMATION: In 1998, the NRC Rules of Practice in 10 CFR Part 2, Subpart J, were modified to provide for the creation and operation of the LSN, an internet-based technological solution to the submission and management of records and documents relating to the licensing of a geologic repository for the disposal of high-level radioactive waste. (63 FR 71729.) Pursuant to 10 CFR 2.1011(d), the agency has chartered the LSNARP, an advisory committee that provides advice to the NRC on fundamental issues relating to LSN design, operation, maintenance, and compliance monitoring. At the August 8, 2001 LSNARP meeting, the principal topics will include discussion of the recent revisions to 10 CFR Part 2 (66 FR 29453–29467—May 31, 2001); discussion of LSNA guidance materials, functional requirements, etc. that were released June 13, 2001; demonstration of the LSN portal and software; a presentation of a technical scenario for a small participant system with some projections about what it will actually take to put ''100 documents'' on the web; and, any other items that DOE or other participants would like to put on the table.

FOR FURTHER INFORMATION CONTACT: U.S. Nuclear Regulatory Commission, Office of the Secretary, Mail Stop O–16 C1, Washington, DC 20555–0001; Attn: Andrew Bates (telephone 301–415–1963; e-mail *ALB@NRC.GOV*) or Atomic Safety and Licensing Board Panel, Mail Stop T–3 F23, Attn: Jack G. Whetstine (telephone 301–415–7391; e-mail *JGW@NRC.GOV*).

Public Participation: Interested persons may make oral presentations to the LSNARP or file written statements. An oral presentations request should be made to one of the contact persons listed above as far in advance as practicable so that appropriate arrangements can be made.

Dated: June 27, 2001.

Andrew L. Bates,

Advisory Committee Management Officer.

[FR Doc. 01–16653 Filed 7–2–01; 8:45 am]

BILLING CODE 7590–01–P

NUCLEAR REGULATORY COMMISSION

Sunshine Act Meeting

DATE: Weeks of July 2, 9, 16, 23, 30, August 6, 2001.

PLACE: Commissioners' Conference Room, 11555 Rockville Pike, Rockville, Maryland.

STATUS: Public and Closed.

MATTERS TO BE CONSIDERED:

Week of July 2, 2001

There are no meetings scheduled for the Week of July 2, 2001.

Week of July 9, 2001—Tentative

Monday, July 9, 2001

1:25 p.m.
Affirmation Session (Public Meeting (If needed)

Week of July 16, 2001—Tentative

Thursday, July 19, 2001

9:25 a.m.
Affirmation Session (Public Meeting (If needed)

9:30 a.m.
Briefing on Results of Agency Action Review Meeting—Reactors (Public Meeting) (Contact: Ron Frahm, 301–415–2986)

1:30 p.m.
Briefing on Readiness for New Plant Applications and Construction (Public Meeting) (Contact: Nanette Gilles, 301–415–1180)

Friday, July 20, 2001

9:30 a.m.
Briefing on Results of Reactor Oversight Process Initial Implementation (Public Meeting) (Contact: Tim Frye, 301–415–1287)

1:00 p.m.
Briefing on Risk-Informing Special Treatment Requirements (Public Meeting) (Contact: John Nakoski, 301–415–1278)

Week of July 23, 2001—Tentative

Wednesday, July 25, 2001

9:25 a.m.
Affirmation Session (Public Meeting) (If needed)

Week of July 30, 2001—Tentative

Tuesday, July 31, 2001

1:25 p.m.
Affirmation Session (Public Meeting (If needed)

Week of August 6, 2001—Tentative

There are no meetings scheduled for the Week of August 6, 2001.

* The schedule for commission meetings is subject to change on short notice. To verify the status of meetings call (recording)—(301) 415–1292. Contact person for more information: David Louis Gamberoni (301) 415–1651.

ADDITIONAL INFORMATION: By a vote of 4–0 on June 22, the Commission determined pursuant to U.S.C. 552b(e) and § 9.107(a) of the Commission's rules that ''Discussion of Intragovernmental Issues (Closed—Ex. 1 and 9)'' be held on June 22, and on less than one week's notice to the public.

By a vote of 5–0 on June 26, the Commission determined pursuant to U.S.C. 552b(e) and § 9.107(a) of the Commission's rules that ''Affirmation of Private Fuel Storage (Independent Spent Fuel Storage Installation) Docket No. 72–22; Review of LBP–01–09'' be held on June 27, and on less than one week's notice to the public.

The NRC Commission Meeting Schedule can be found on the Internet at: *http://www.nrc.gov/SECY/smj/schedule.htm*

This notice is distributed by mail to several hundred subscribers; if you no longer wish to receive it, or would like to be added to the distribution, please contact the Office of the Secretary, Washington, D.C. 20555 (301–415–1969). In addition, distribution of this meeting notice over the Internet system is available. If you are interested in receiving this Commission meeting schedule electronically, please send an electronic message to dkw@nrc.gov.

Dated: June 28, 2001.

David Louis Gamberoni,

Technical Coordinator, Office of the Secretary.

[FR Doc. 01–16765 Filed 6–29–01; 8:45 am]

BILLING CODE 7590–01–M

SECURITIES AND EXCHANGE COMMISSION

[Extension: Rule 301 and Forms ATS and ATS–R, SEC File No. 270–451, OMB Control No. 3235–0509; Rule 302, SEC File No. 270–453, OMB Control No. 3235–0510; Rule 303, SEC File No. 270–450, OMB Control No. 3235–0505]

Submission for OMB Review; Comment Request

Upon Written Request, Copies Available From: Securities and Exchange Commission, Office of Filings and Information Services, Washington, DC 20549.

Notice is hereby given that pursuant to the Paperwork Reduction Act of 1995 (44 U.S.C. 3501 *et seq.*), the Securities and Exchange Commission (''Commission'') has submitted to the Office of Management and Budget requests for extension of the previously approved collections of information discussed below.

Regulation ATS provides a regulatory structure that directly addresses issues related to alternative trading systems' role in the marketplace. Regulation ATS allows alternative trading systems to choose between two regulatory structures. Alternative trading systems have the choice between registering as broker-dealers and complying with Regulation ATS or registering as national securities exchanges. Regulation ATS provides the regulatory framework for those alternative trading systems that choose to be regulated as broker-dealers.

Rule 301 of Regulation ATS contains certain notice and reporting requirements, as well as additional obligations that only apply to alternative trading systems with significant volume. Rule 301 describes the conditions with which an alternative trading system must comply to be registered as a broker-dealer. Rule 301 requires all alternative trading systems that wish to comply with Regulation ATS to file an initial operation report on Form ATS. The initial operation report requires information regarding operation of the system including the method of operation, access criteria and the types of securities traded. Alternative trading systems are also required to supply updates on Form ATS to the Commission, describing material changes to the system, and quarterly transaction reports on Form ATS–R. Alternative trading systems are also required to file cessation of operations reports on Form ATS.

Alternative trading systems with significant volume are required to comply with requirements for fair access and systems capacity, integrity and security. Under Rule 301, such alternative trading systems are required to establish standards for granting access to trading on its system. In addition, upon a decision to deny or limit an investor's access to the system, an alternative trading system is required to provide notice to the investor of the denial or limitation and their right to an appeal to the Commission. Regulation ATS requires alternative trading systems to preserve any records made in the process of complying with the systems' capacity, integrity and security requirements. In addition, such alternative trading systems are required to notify Commission staff of material systems outages and significant systems changes.

The Commission uses the information provided pursuant to Rule 301 to comprehensively monitor the growth and development of alternative trading systems to confirm that investors effecting trades through the systems are adequately protected, and that the systems do not impede the maintenance of fair and orderly securities markets or otherwise operate in a manner that is inconsistent with the federal securities laws. In particular, the information collected and reported to the Commission by alternative trading systems enables the Commission to evaluate the operation of alternative trading systems with regard to national market system goals, and monitor the competitive effects of these systems to ascertain whether the regulatory framework remains appropriate to the operation of such systems. Without the information provided on Forms ATS and ATS–R, the Commission would not have readily available information on a regular basis in a format that will allow it to determine whether such systems have adequate safeguards.

Respondents consist of alternative trading systems that choose to register as broker-dealers and comply with the requirements of Regulation ATS. The Commission estimates that there are currently approximately 69 respondents.

An estimated 69 respondents will file an average total of 493 responses per year, which corresponds to an estimated annual response burden of 1,988.5 hours. At an average cost per burden hour of approximately $77.07, the resultant total related cost of compliance for these respondents is $153,263.14 per year (1,988.5 burden hours multiplied by $77.07/hour).

Rule 302 of Regulation ATS describes the recordkeeping requirements for alternative trading systems that are not national securities exchanges. Under Rule 302, alternative trading systems are required to make a record of subscribers to the alternative trading system, daily summaries of trading in the alternative trading system and records of order information in the alternative trading system.

The information required to be collected under Rule 302 should increase the abilities of the Commission, state securities regulatory authorities, and the SROs to ensure that alternative trading systems are in compliance with Regulation ATS as well as other rules and regulations of the Commission and the SROs. If the information is not collected or collected less frequently, the Commission would be severely limited in its ability to comply with its statutory obligations, provide for the protection of investors and promote the maintenance of fair and orderly markets.

Respondents consist of alternative trading systems that choose to register as broker-dealers and comply with the requirements of Regulation ATS. The Commission estimates that there are currently approximately 69 respondents.

Sixty-nine respondents will spend approximately 2,484 hours per year to comply with the recordkeeping requirements of Rule 302. At an average cost per burden hour of $86.54, the resultant total related cost of compliance for these respondents is $214,965.36 per year (2,484 burden hours multiplied by $86.54/hour).

Rule 303 of Regulation ATS describes the record preservation requirements for alternative trading systems that are not national securities exchanges.

For alternative trading systems that register as broker-dealers, comply with Regulation ATS and meet certain volume thresholds, such alternative trading systems would be required to preserve all records made pursuant to Rule 302, which includes information relating to subscribers, trading summaries and order information. Such alternative trading systems would also be required to preserve records of any notices communicated to subscribers, a copy of the systems' standards for granting access and any documents generated in the course of complying with the systems' capacity, integrity and security requirements under Regulation ATS. Rule 303 also describes how such records must be kept and how long they must be preserved.

The information contained in the records required to be preserved by Rule 303 will be used by examiners and other representatives of the Commission, state securities regulatory authorities, and the SROs to ensure that alternative trading systems are in compliance with

Regulation ATS as well as other rules and regulations of the Commission and the SROs. Without the data required by Rule 303, the Commission would be severely limited in its ability to comply with its statutory obligations, provide for the protection of investors and promote the maintenance of fair and orderly markets.

Respondents consist of alternative trading systems that choose to register as broker-dealers and comply with the requirements of Regulation ATS. The Commission estimates that there are currently approximately 69 respondents.

Sixty-nine respondents will spend approximately 276 hours per year (69 respondents at 4 burden hours/respondent) to comply with the record preservation requirements of Rule 303. At an average cost per burden hour of $86.54, the resultant total related cost of compliance for these respondents is $23,885.04 per year (276 burden hours multiplied by $86.54/hour).

Compliance with Rules 301, 302, and 303 is mandatory. The information required by the Rules 301, 302, and 303 is available only to the examination of the Commission staff, state securities authorities and the SROs. Subject to the provisions of the Freedom of Information Act, 5 U.S.C. 522 (''FOIA''), and the Commission's rules thereunder (17 CFR 200.80(b)(4)(iii)), the Commission does not generally publish or make available information contained in any reports, summaries, analyses, letters, or memoranda arising out of, in anticipation of, or in connection with an examination or inspection of the books and records of any person or any other investigation.

Regulation ATS requires alternative trading systems to preserve any records, for at least three years, made in the process of complying with the systems capacity, integrity and security requirements.

An agency may not conduct or sponsor, and a person is not required to respond to, a collection of information unless it displays a currently valid control number.

Written comments regarding the above information should be directed to the following persons: (a) Desk Officer for the Securities and Exchange Commission, Office of Information and Regulatory Affairs, Office of Management and Budget, Room 10102, New Executive Office Building, Washington, D.C. 20503; and (b) Michael E. Bartell, Associate Executive Director, Office of Information Technology, Securities and Exchange Commission, 450 Fifth Street, N.W., Washington, D.C. 20549. Comments must be submitted to the Office of Management and Budget within 30 days of this notice.

Dated: June 26, 2001.

Margaret H. McFarland,

Deputy Secretary.

[FR Doc. 01–16633 Filed 7–2–01; 8:45 am]

BILLING CODE 8010–01–M

SECURITIES AND EXCHANGE COMMISSION

[Investment Company Act Release No. 25052; 812–11262]

Apex Municipal Fund, Inc., et al.; Notice of Application

June 26, 2001.

AGENCY: Securities and Exchange Commission (''Commission'').

ACTION: Notice of an application under sections 6(c), 10(f), and 17(b) of the Investment Company Act of 1940 (''Act'') for exemptions from sections 10(f) and 17(a) of the Act.

Summary of Application: The requested order would permit certain management investment companies to purchase municipal securities through group orders where an affiliated broker-dealer is a member of the underwriting syndicate.

Applicants: Apex Municipal Fund Inc., CMA Multi-State Municipal Series Trust, CMA Tax-Exempt Fund, Merrill Lynch California Municipal Series Trust, Merrill Lynch High Income Municipal Bond Fund, Inc., Merrill Lynch Institutional Tax-Exempt Fund, Merrill Lynch Multi-State Limited Maturity Municipal Series Trust, Merrill Lynch Multi-State Municipal Series Trust, Merrill Lynch Municipal Bond Fund, Inc., Merrill Lynch Municipal Strategy Fund, Inc., Merrill Lynch Municipal Series Trust, MuniAssets Fund, Inc., The Municipal Fund Accumulation Program, Inc., MuniEnhanced Fund, Inc., MuniHoldings California Insured Fund, Inc., MuniHoldings Florida Insured Fund, MuniHoldings Fund, Inc., MuniHoldings Fund II, Inc., MuniHoldings Insured Fund, Inc., MuniHoldings Insured Fund II, Inc., MuniHolding Michigan Insured Fund II, Inc., MuniHoldings New Jersey Insured Fund, Inc., MuniHoldings New York Insured Fund, Inc., MuniInsured Fund, Inc., MuniVest Fund, Inc., MuniVest Fund II, Inc., MuniYield Arizona Fund, Inc., MuniYield California Fund, Inc., MuniYield California Insured Fund, Inc., MuniYield California Insured Fund II, Inc., MuniYield Florida Fund, MuniYield Florida Insured Fund, MuniYield Fund, Inc., MuniYield Insured Fund, Inc., MuniYield Michigan Fund, Inc., MuniYield Michigan Insured Fund, Inc., MuniYield New Jersey Fund, Inc., MuniYield New Jersey Insured Fund, Inc., MuniYield New York Insured Fund, Inc., MuniYield Pennsylvania Insured Fund, MuniYield Quality Fund, Inc., MuniYield Quality Fund II, Inc. (collectively, the ''Funds''); Merrill Lynch Investment Managers, L.P. (''MLIM'') and Fund Asset Management, L.P. (''FAM'') (each an ''Adviser'' and, collectively, the ''Advisers''); and Merrill Lynch Pierce, Fenner & Smith Incorporated (''MLPF&S'').

Filing Dates: The application was filed on August 14, 1998, and amended on June 25, 2001.

Hearing or Notification of Hearing: An order granting the application will be issued unless the Commission orders a hearing. Interested persons may request a hearing by writing to the Commission's Secretary and serving applicants with a copy of the request, personally or by mail. Hearing requests should be received by the Commission by 5:30 p.m. on July 23, 2001 and should be accompanied by proof of service on applicants, in the form of an affidavit or, for lawyers, a certificate of service. Hearing requests should state the nature of the writer's interest, the reason for the request, and the issues contested. Persons who wish to be notified of a hearing may request notification by writing to the Commission's Secretary.

ADDRESSES: Secretary, Securities and Exchange Commission, 450 Fifth Street, N.W., Washington, D.C. 20549–0609. Applicants, c/o Philip L. Kirstein, Esq., MLIM, Box 9011, Princeton, NJ 08543–9011.

FOR FURTHER INFORMATION CONTACT: Karen L. Goldstein, Senior Counsel, at (202) 942–0646, or Nadya B. Roytblat, Assistant Director, at (202) 942–0564 (Division of Investment Management, Office of Investment Company Regulation).

SUPPLEMENTARY INFORMATION: The following is a summary of the application. The complete application may be obtained for a fee at the Commission's Public Reference Branch, 450 Fifth Street, NW., Washington, DC 20549–0102 (telephone (202) 942–8090).

Applicants' Representations

1. Each fund is an open-end or closed-end management investment company registered under the Act. The investment objective of each Fund is to seek as high a level of current income exempt from federal tax and, to the

extent applicable, state and local taxes as is consistent with its investment approach. To meet this objective, the Funds invest in Eligible Municipal Securities, as that term is defined in rule 10f–3(a)(3) under the Act.[1] Applicants state that, with approximately $40.4 billion in assets under management, the Funds comprise one of the largest municipal bond fund complexes.

2. Each Fund has an investment advisory agreement with an Adviser pursuant to which the Adviser provides investment advisory services to the Fund. Each Adviser is registered as an investment adviser under the Investment Advisers Act of 1940. Both Advisers are owned and controlled by Merrill Lynch & Co., Inc. (''ML & Co.'').

3. MLPF&S, a registered broker-dealer, is a wholly-owned subsidiary of ML & Co. MLPF&S participates as an underwriter in a substantial number of public offerings. Applicants state that MLPF&S is one of the top underwriters in most types of municipal securities. In 1999, for example, MLPF&S was lead manager or co-manager of approximately $50.95 billion, or 23.25%, of the dollar volume of new issues of municipal securities having a remaining maturity of more than thirteen months, and of approximately $3.10 billion, or 10% of those having a remaining maturity of thirteen months or less.

4. Applicants request relief from section 10(f) of the Act under section 10(f) and from section 17(a) of the Act under sections 6(c) and 17(b) of the Act to permit the Funds to place group orders for Eligible Municipal Securities with an underwriting syndicate that includes MLPF&S. A group order is an order that is allocated to all members of the syndicate in proportion to their respective participations. The requested relief would extend only to situations where: (i) the syndicate is accepting only group orders; or (ii) the lead manager of the syndicate believes the offering will be oversubscribed at the time the Funds place their order, and group orders will be given priority over net designated orders.[2] Applicants also request that the relief apply to registered management investment companies organized in the future that invest in Eligible Municipal Securities and are advised by an Adviser (including any successors in interest)[3] or by an entity controlling, controlled by, or under common control with an Adviser (''Future Funds'').

Applicant's Legal Analysis

1. Section 10(f), in relevant part, prohibits a registered investment company from purchasing securities from an underwriting syndicate in which an affiliated person of the company's investment adviser acts as a principal underwriter. Under section 2(a)(3) of the Act, MLPF&S is an affiliated person of each Adviser because all three entities are under the control of ML & Co.

2. Section 10(f) further provides that the Commission, by rule or order, may exempt any transaction or class of transactions from the provisions of section 10(f) to the extent that the exemption is consistent with the protection of investors. Rule 10f–3 under the Act permits a registered investment company to make purchases otherwise prohibited by section 10(f) under certain conditions, including that purchases of municipal securities may not be made through group orders or otherwise allocated to the account of an underwriter affiliated with the company's investment adviser. Applicants state that rule 10f–3 prevents the Funds from placing group orders for Eligible Municipal Securities with an underwriting syndicate that includes MLPF&S.

3. Section 17(a) generally prohibits an affiliated person of a registered investment company, or an affiliated person of such person, acting as principal, from selling securities to the investment company. Applicants submit that a Fund's submission of a group order for Eligible Municipal Securities to a syndicate that includes MLPF&S may be deemed a principal transaction between the Fund and MLPF&S and thus prohibited by section 17(a).

4. Section 17(b) authorizes the Commission to exempt a transaction from the provisions of section 17(a) if it finds that the terms of the proposed transaction are fair and reasonable and do not involve overreaching on the part of any person concerned, and that the proposed transaction is consistent with the policy of the registered investment company and the general purposes of the Act. Section 6(c), in relevant part, permits the Commission to exempt a class of transactions from any provision of the Act if, and to the extent that, the exemption is necessary or appropriate in the public interest and consistent with the protection of investors and the purposes fairly intended by the policy and provisions of the Act. Applicants believe that the requested exemptions meet the standards for relief set forth in sections 6(c), 10(f), and 17(b).

5. According to applicants, several factors have had, and increasingly will have, a significant negative impact on the ability of the Advisers to make appropriate municipal securities investments of the Funds. Applicants contend that increased investor demand for tax-exempt investment opportunities has resulted in fierce competition or municipal securities among individual investors and funds investing in such securities and that, at the same time, the supply of new issues of municipal securities has declined. Applicants further contend that, since passage of the Tax Reform Act of 1986, a number of underwriters have reduced or eliminated their municipal bond business. Applicants assert that this development has been coupled with a dramatic consolidation among investment banks acting as underwriters and dealers. According to applicants, this consolidation among underwriters has had the effect of boosting MLPF&S's participation in municipal securities underwritings generally and that, as a result, the Funds' opportunities to purchase municipal securities from syndicates that do not include MLPF&S have diminished significantly.

6. Applicants also assert that there is an increasing tendency in municipal securities offerings for the underwriting syndicate to give a higher priority to group orders than to net designated orders, and that group orders are comprising an increasing percentage of MLPF&S's negotiated transaction business. For example, in the calendar year period ending December 31, 1999, 23.08% of MLPF&S's total senior managed negotiated transaction business was conducted on a group order basis, compared with only 10.05% for the corresponding period in 1998.

7. Applicants assert that, without the requested relief, the Funds may have to pay higher prices for Eligible Municipal Securities in the secondary market and may risk being underinvested at times due to a lack of other appropriate

[1] The term Eligible Municipal Securities generally refers to municipal securities that have received an investment grade rating from at least one NRSRO. The term ''municipal securities,'' as defined in section 3(a)(29) of the Securities Exchange Act of 1934, generally refers to securities that are issued by or on behalf of states or their political subdivisions, agencies and instrumentalities, the interest on which is exempt from federal taxation.

[2] In a net designated order, the designated members of the syndicate sharing the order retain the entire commission generated by the order.

[3] The term ''successors in interest'' is limited to entities that result from a reorganization into another jurisdiction or change in the type of business organization. Each Fund that currently intends to rely upon the requested order has been named as an applicant. Any Future Fund and any investment adviser of a Future Fund that relies on the order will comply with the terms and conditions of the application. For purposes of determining compliance with rule 10f–3(b)(7) under the Act, FAM, MLIM and any investment adviser of a Future Fund will be considered the same investment adviser.

investment opportunities. Applicants believe that the conditions to the order will ensure that the Funds place group orders only where reasonably necessary to enable them to purchase suitable portfolio securities in the desired quantities.

Applicants' Conditions

Applicants agree that any order granting the requested relief will be subject to the following conditions:

1. The terms of the order will apply only to purchases of Eligible Municipal Securities in negotiated underwritings.

2. Applicants will comply with all provisions of rule 10f–3 except for paragraph (b)(8) to the extent that it prohibits the purchase of Eligible Municipal Securities through group orders when MLPF&S is a member of the underwriting syndicate.

3. The Advisers may enter group orders on behalf of the funds when MLPF&S is a member of the underwriting syndicate only where: (i) the lead manager for the syndicate has informed the Advisers that only group orders are being accepted; or (ii) as of the time the Advisers placed an order, and based on the orders received by the syndicate through that time, the lead manager believed that total orders would exceed the available quantity of Eligible Municipal Securities (*i.e.*, the Eligible Municipal Securities will be oversubscribed) and group orders will receive a higher priority than net designated orders.

4. At the time of purchase by a Fund, MLPF&S will not be obligated for more than 50% of the Eligible Municipal Securities being offered by the relevant underwriting syndicate.

5. The Advisers may place group orders on behalf of the Funds through MLPF&S or any unaffiliated member of the syndicate, but may not, under any circumstances, place a net designated order for the credit of or through MLPF&S.

6. For all purchases by a Fund of Eligible Municipal Securities when MLPF&S is a member of the underwriting syndicate, there will be a substantially contemporaneous notation made at the time the Advisers place an order indicating that the lead manager has stated that only group orders will be accepted, or that the lead manager believed at such time that the Eligible Municipal Securities will be oversubscribed and group orders will receive a higher priority than net designated orders. Where MLPF&S is the lead manager, such notation will be provided in writing by MLPF&S to the Advisers. Where there is an unaffiliated lead manager, the Advisers will obtain orally from the lead manager a representation to the foregoing effect and will note the receipt thereof on the trade ticket. The Advisers also will obtain from the lead manager a copy of the information described in rule G–11(f) of the Municipal Securities Rulemaking Board. At the close of the offering, the Advisers will make a notation as to whether the offering was oversubscribed. This documentation will be included as part of the Fund's compliance with the periodic reporting and recordkeeping requirements of rule 10f–3, set forth in paragraphs (b)(9) and (b)(11)(ii), respectively.

7. The board of directors (or trustees) of the Fund, including a majority of the directors (or trustees) who are not interested persons under section 2(a)(19) of the Act, will review no less frequently than quarterly each purchase of Eligible Municipal Securities made by the Fund pursuant to the order. The board will determine that the terms of the transactions were reasonable and fair to the shareholders of the Fund and did not involve overreaching of the Fund or its shareholders on the part of any person concerned. Among other things, the board will consider the number of instances in which a notation made pursuant to condition 6 above indicated that the offering was going to be oversubscribed when, according to the notation made at the close of the offering pursuant to condition 6 above, it was not oversubscribed. In considering whether the price paid for the Eligible Municipal Securities was reasonable and fair, the price of the Eligible Municipal Securities will be analyzed with respect to comparable transactions identified by MLPF&S or the Advisers involving similar securities being purchased or sold during a comparable period of time, if such transactions could reasonably be found to have existed.

8. The order will be valid only so long as the Advisers, on the one hand, and MLPF&S, on the other, operate as separate entities and independent profit centers within the holding company framework of ML & Co., with separate capitalization, separate books and records, and substantially separate officers and employees. ML & Co. will not have any involvement with respect to proposed transactions pursuant to the order and will not attempt to influence or control in any way the placing by the Funds or the Advisers of orders with MLPF&S.

9. The legal departments of MLPF&S and the Advisers will prepare guidelines for personnel of MLPF&S and the Advisers to make certain that transactions conducted pursuant to the order comply with the above conditions, and that the parties maintain arm's length relationships. In the training of personnel of MLPF&S, particular emphasis will be given to the fact that the subject transactions may occur only where the lead manager has informed the Advisers in the manner described in condition 6 above that group orders are required for purchase, or that the lead manager believes the Eligible Municipal Securities will be oversubscribed and that group orders will receive a higher priority than net designated orders. and that the Advisers may not place net designated orders for the credit of or through MLPF&S. the legal departments will periodically monitor the activities of MLPF&S and the Advisers to make certain of adherence to the conditions set forth in the order.

10. For three years following the issuance of the order, the Advisers will produce data listing the purchases of Eligible Municipal Securities made by the Funds pursuant to the order during the preceding year, indicating whether each purchase was effected under the circumstances described above in condition 3(i) or 3(ii) and the percentage of the offering that was purchased by the Funds. MLPF&S will produce data and provide copies to the Advisers showing the number of Eligible Municipal Securities underwritings when: (i) MLPF&S was a member of the underwriting syndicate and only group orders were accepted or the Eligible Municipal Securities were oversubscribed and group orders received a higher priority than net designated orders; and (ii) MLPF&S was lead manager or co-manager and only group orders were accepted or the Eligible Municipal Securities were oversubscribed and group orders received a higher priority than net designated orders; and (ii) MLPF&S was lead manager or co-manager and only group orders were accepted or the Eligible Municipal Securities were oversubscribed and group orders received a higher priority than net designated orders. The above information will be included as part of the Funds' compliance with the periodic reporting and recordkeeping requirements of rule 10f–3, set forth in paragraphs (b)9) and (b)(11)(ii), respectively.

For the Commission, by the Division of Investment Management, under delegated authority.

Margaret H. McFarland,

Deputy Secretary.

[FR Doc. 01–16634 Filed 7–2–01; 8:45 am]

BILLING CODE 8010–01–M

SECURITIES AND EXCHANGE COMMISSION

[Investment Company Act Release No. 25053; 812–12302]

The Huntington Funds, et al.; Notice of Application

June 27, 2001.

AGENCY: Securities and Exchange Commission (''Commission'').

ACTION: Notice of an application for an order under section 12(d)(1)(J) of the Investment Company Act of 1940 (the ''Act'') for an exemption from sections 12(d)(1)(A) and (B) of the Act, under sections 6(c) and 17(b) of the Act for an exemption from section 17(a) of the Act, and under section 17(d) of the Act and rule 17d–1 under the Act to permit certain joint transactions.

Summary of the Application: Applicants request an order to permit certain registered open-end management investment companies to invest uninvested cash and cash collateral in affiliated money market funds in excess of the limits in sections 12(d)(1)(A) and (B) of the Act.

Applicants: The Huntington Funds, Huntington, VA Funds (collectively, the ''Trusts''), and Huntington Asset Advisors, Inc. (the ''Adviser'').

Filing Dates: The application was filed on October 16, 2000 and amended on June 14, 2001.

Hearing or Notification of Hearing: An order granting the application will be issued unless the Commission orders a hearing. Interested persons may request a hearing by writing to the Commission's Secretary and serving applicant with a copy of the request, personally or by mail. Hearing requests should be received by the Commission by 5:30 p.m. on July 23, 2001, and should be accompanied by proof of service on applicants, in the form of an affidavit or, for lawyers, a certificate of service. Hearing requests should state the nature of the writer's interest, the reason for the request, and the issues contested. Persons who wish to be notified of a hearing may request notification by writing to the Commission's Secretary.

ADDRESSES: Secretary, Commission, 450 fifth Street, N.W., Washington, D.C. 20549–0609. Applicants, c/o Paul R. Rentenbach, Esq., Dykema Gossett, PLLC, 400 Renaissance Center, Detroit, Michigan 48243–1668.

FOR FURTHER INFORMATION CONTACT: Keith A. Gregory, Attorney-Adviser, at (202) 942–0611, or Mary Kay Frech, Branch Chief, at (202) 942–0564 (Division of Investment Management, Office of Investment Company Regulation).

SUPPLEMENTARY INFORMATION: The following is a summary of the application. The complete application may be obtained for a fee at the Commission's Public Reference Branch, 450 Fifth Street, NW., Washington, DC 20549–0102 (tel. 202–942–8090).

Applicants' Representations

1. The Trusts, organized as Massachusetts business trusts, are registered under the Act as open-end management investment companies. The Huntington Funds currently consists of twelve series and the Huntington VA Funds currently consists of two series (together with any registered open-end management investment company or series thereof that currently, or in the future, is advised by the Adviser, the ''Funds'').[1] The shares of the Huntington VA Funds are sold exclusively to insurance company separate accounts that fund variable annuity and variable life contracts. Certain Funds hold themselves out as money market Funds and comply with rule 2a–7 under the Act (the ''Central Funds''). The Adviser is an indirect wholly-owned subsidiary of Huntington Bancshares Incorporated, a publicly-held bank holding company. The Adviser is registered under the Investment Advisers Act of 1940 and serves as investment adviser to the Funds.[2]

2. Applicants state that each Participating Fund (as defined below) has, or may be expected to have, cash that has not been invested in portfolio securities (''Uninvested Cash''). Uninvested Cash may result from a variety of sources, including dividends or interest received on portfolio securities, unsettled securities transactions, strategic reserves, matured investments, proceeds from liquidation of investment securities, dividend payments, or money received from investors. A Fund that purchases shares of the Central Funds is referred to as a Participating Fund. The Funds also may participate in a securities lending program under which a Fund may lend its portfolio securities to broker-dealers or other institutional investors (''Securities Lending Program''). The loans are continuously secured by collateral equal at all times to at least the market value of the securities loaned. Collateral for these loans may include cash (''Cash Collateral,'' and together with Uninvested Cash, ''Cash Balances'').

3. Applicants request an order to permit each of the Participating Funds to invest their Cash Balances in one or more of the Central Funds, and the Central Funds to sell their shares to, and redeem their shares from, the Participating Funds. Investment of Cash Balances in shares of the Central Funds will be made only to the extent that such investments are consistent with each Participating Fund's investment restrictions and policies as set forth in the Participating Fund's prospectus and statement of additional information. Applicants state that the proposed transactions may reduce transaction costs, create more liquidity, increase returns, and diversify holdings.

Applicants' Legal Analysis

1. Section 12(d)(1)(A) of the Act provides, in pertinent part, that no registered investment company may acquire securities of another investment company if such securities represent more than 3% of the acquired company's outstanding voting stock, more than 5% of the acquiring company's total assets, or if such securities, together with the securities of other acquired investment companies, represent more than 10% of the acquiring company's total assets. Section 12(d)(1)(B) of the Act, in pertinent part, provides that no registered open-end investment company may sell its securities to another investment company if the sale will cause the acquiring company to own more than 3% of the acquired company's voting stock, or if the sale will cause more than 10% of the acquired company's voting stock to be owned by investment companies.

2. Section 12(d)(1)(J) of the Act provides that the Commission may exempt any person, security, or transaction from any provision of section 12(d)(1) if, and to the extent that, such exemption is consistent with the public interest and the protection of investors. Applicants request relief under section 12(d)(1)(J) from the limitations of sections 12(d)(1)(A) and (B) to permit the Participating Funds to invest Cash Balances in the Central Funds.

3. Applicants state that the proposed arrangement would not result in the abuses that sections 12(d)(1)(A) and (B) were intended to prevent. Applicants

[1] Each Fund that currently intends to rely on the requested relief is a series of one of the Trusts named as an applicant. Any future Fund that may rely on the order in the future will do so only in accordance with the terms and conditions of the application.

[2] For the purposes of this application, the term ''Adviser'' includes, in addition to Huntington Asset Advisors, Inc., any other person controlling, controlled by or under common control with Huntington Asset Advisors, Inc. that acts in the future as an investment adviser to a Fund.

state that because each Central Fund will maintain a highly liquid portfolio, a Participating Fund will not be in a position to gain undue influence over a Central Fund through threat of redemption. Applicants represent that the proposed arrangement will not result in an inappropriate layering of fees because shares of the Central Funds sold to the Participating Funds will not be subject to a sales load, redemption fee, distribution fee under a plan adopted in accordance with rule 12b–1 under the Act, or service fee (as defined in rule 2830(b)(9) of the National Association of Securities Dealers' (''NASD'') Conduct Rules). Applicants state that if a Central Fund offers more than one class of shares, a Participating Fund will invest its Cash Balances only in the class with the lowest expense ratio (taking into account the expected impact of the Participating Funds investment) at the time of investment. In connection with approving any advisory contract for a Participating Fund, the Participating Fund's board of trustees (the ''Board''), including a majority of the trustees who are not ''interested persons,'' as defined in section 2(a)(19) of the Act (the ''Disinterested Trustees'') will consider to what extent, if any, the advisory fees charged to the Participating Fund by the Adviser should be reduced to account for reduced services provided to the Fund by the Adviser as a result of the investment of Uninvested Cash in the Central Funds. Applicants represent that no Central Fund will acquire securities of any other investment company in excess of the limitations contained in section 12(d)(1)(A) of the Act.

4. Section 17(a) of the Act makes it unlawful for any affiliated person of a registered investment company, or an affiliated person of such person, acting as principal, to sell or purchase any security to or from the company. Section 2(a)(3) of the Act defines an ''affiliated person'' of an investment company to include, among others, any person directly or indirectly controlling, controlled by, or under common control with the investment company and any investment adviser to the investment company. Applicants state that, because the Funds share a common Board, each Fund may be deemed to be under common control with each of the other Funds, and thus an affiliated person of each of the other Funds. In addition, because a Participating Fund may acquire 5% or more of a Central Fund, each Fund may be deemed to be an affiliated person of the other Fund. As a result, section 17(a) would prohibit the sale of the shares of a Central Fund to the participating Funds, and the redemption of the shares by a Central Fund.

5. Section 17(b) of the Act authorizes the Commission to exempt a transaction from section 17(a) if the terms of the proposed transaction, including the consideration to be paid or received, are reasonable and fair and do not involve overreaching on the part of any person concerned, the proposed transaction is consistent with the policy of each investment company concerned, and the proposed transaction is consistent with the general purposes of the Act. Section 6(c) of the Act permits the commission to exempt persons or transactions from any provision of the Act if the exemption is necessary or appropriate in the public interest and consistent with the protection of investors and the purposes fairly intended by the policy and provisions of the Act.

6. Applicants submit that their request for relief to permit the purchase and redemption of shares of the Central Funds by the participating Funds satisfies the standards in sections 6(c) and 17(b) of the Act. Applicants note that shares of the Central Funds will be purchased and redeemed at their net asset value, the same consideration paid and received for these shares by any other shareholder. Applicants state that the Participating Funds will retain their ability to invest Cash Balances directly in money market instruments as authorized by their respective investment objectives and policies if they believe they can obtain a higher rate of return, or for any other reason. Applicants also state that a Central Fund has the right to discontinue selling shares to any of the Participating Funds if the Central Fund's Board determines that such sale would adversely affect its portfolio management and operations.

7. Section 17(d) of the Act and rule 17d–1 under the Act prohibit an affiliated person of an investment company, acting as principal, from participating in or effecting any transaction in connection with any joint enterprise or joint arrangement in which the investment company participates. Applicants state that each Participating Fund, by purchasing shares of a Central Fund, the Adviser, by managing the assets of the Participating Funds investing in a Central Fund, and a Central Fund, by selling shares to the Participating Funds, could be deemed to be participants in a joint enterprise or arrangement within the meaning of section 17(d) of the Act and rule 17d–1 under the Act.

8. Rule 17d–1 permits the Commission to approve a proposed joint transaction covered by the terms of section 17(d) of the Act. In determining whether to approve a transaction, the Commission is to consider whether the proposed transaction is consistent with the provisions, policies, and purposes of the Act, and the extent to which the participation is on a basis different from or less advantageous than that of other participants. Applicants submit that the investment by the Participating Funds in shares of a Central Fund would be on the same basis and would be indistinguishable from any other shareholder account maintained by the Central Fund and that the transactions will be consistent with the Act.

Applicants' Conditions

Applicants agree that the order granting the requested relief will be subject to the following conditions:

1. Shares of the Central Funds sold to and redeemed by the Participating Funds will not be subject to a sales load, redemption fee, distribution fee under a plan adopted in accordance with rule 12b–1 under the Act, or service fee (as defined in rule 2830(b)(9) of the NASD's Conduct Rules).

2. Before the next meeting of the Board is held for purposes of voting on an advisory contract under section 15 of the act, the Adviser will provide the Board with specific information regarding the approximate cost to the Adviser of, or portion of the advisory fee under the existing advisory contract attributable to, managing the Uninvested Cash of the Participating Fund that can be expected to be invested in the Central Funds. Before approving any advisory contract for a Participating Fund, the Board, including a majority of the Disinterested Trustees, shall consider to what extent, if any, the advisory fees charged to the Participating Fund by the Adviser should be reduced to account for reduced services provided to the Funds by the Adviser as a result of the Uninvested Cash being invested in the Central Fund. The minute books of the Participating Fund will record fully the Board's considerations in approving the advisory contract, including the considerations referred to above.

3. Each of the Participating Funds will invest Uninvested Cash in, and hold shares of, the Central Funds only to the extent that the Participating Fund's aggregate investment of Uninvested Cash in the Central Funds does not exceed 25 percent of the Participating Fund's total assets. For purposes of this limitation, each Participating Fund or series thereof will be treated as a separate investment company.

4. Investment of Cash Balances in shares of the Central Funds will be in accordance with each Participating Fund's respective investment restrictions, if any, and will be consistent with each Participating Fund's policies as set forth in the prospectus and statement of additional information.

5. Each Participating Fund, Central Fund, and any future Fund that may rely on the order shall be advised by the Adviser.

6. No Central Fund shall acquire securities of any other investment company in excess of the limits contained in section 12(d)(1)(A) of the Act.

7. Before a Fund may participate in the Securities Lending Program, a majority of the Board, including a majority of the Disinterested Trustees, will approve the Fund's participation in the Securities Lending Program. Such Trustees also will evaluate the securities lending arrangement and its results no less frequently than annually and determine that any investment of Cash Collateral in the Central Funds is in the best interest of the shareholders of the Fund.

For the Commission, by the Division of Investment Management, pursuant to delegated authority.

Margaret H. McFarland,

Deputy Secretary.

[FR Doc. 01–16635 Filed 7–2–01; 8:45 am]

BILLING CODE 8010–01–M

SECURITIES AND EXCHANGE COMMISSION

[Release No. 34–44477; File No. SR–AMEX–2001–14]

Self-Regulatory Organizations; Order Approving Proposed Rule Change and Amendment No. 1 Thereto and Notice of Filing and Order Granting Accelerated Approval of Amendment No. 2 Thereto by the American Stock Exchange LLC Relating to Members' Written Proposals To List Equity Option Classes

June 27, 2001.

I. Introduction

On March 8, 2001, the American Stock Exchange LLC (''Amex'' or ''Exchange'') filed with the Securities and Exchange Commission (''Commission''), pursuant to section 19(b)(1) of the Securities Exchange Act of 1934 (''Act''),[1] and Rule 19b–4 thereunder,[2] a proposed rule change adopting formal procedures for members to submit proposals to list option classes on the Exchange. The Exchange submitted an amendment to the proposed rule change on April 17, 2001.[3] the **Federal Register** published the proposed rule change for comment on April 30, 2001.[4] The Commission receive no comments on the proposal. The Exchange filed Amendment No. 2 to the proposed rule change on June 22, 2001.[5] This order approves the proposed rule change and grants accelerated approval to Amendment No. 2. The Commission also is soliciting comment on Amendment No. 2 to the proposed rule change.

II. Description of the Proposal

The proposed rule change would adopt formal procedures for members to submit proposals to list option classes on the Exchange, and would codify the factors considered by the Exchange in listing option classes.[6] The Exchange would be required to review and make a determination regarding a member's listing proposal within 25 days of receipt of the proposal. If the Exchange decides not to list the proposed option class or to limit or condition the listing of the option in any way, the Exchange would be required, in writing and within the 25-day period, to inform the member of the basis for denial of the proposal or the basis for any limitation or condition put on its acceptance.

III. Discussion

The Commission finds that the proposed rule change is consistent with the requirements of the Act and the rules and regulations thereunder applicable to a national securities exchange.[7] Specifically, the Commission believes that the proposed rule change is consistent with the section 6(b)(5)[8] requirements that the rules of an exchange be designed to promote just and equitable principles of trade, to remove impediments to and perfect the mechanisms of a free and open market and a national market system, and, in general, to protect investors and the public interest.

The Commission believes that the proposed rule change will remove impediments to and perfect the mechanisms of a free and open market by providing formal procedures for members to request the listing of options on the Exchange. The proposal would required the Exchange to respond in writing within 25 days to requests by members to list options. The Commission believes that the proposed procedures and time frames set forth in the proposed rule change are reasonable and adequately balance the Exchange's need to thoroughly examine proposed listings before making its determination with its members' need for a prompt and specific response to its listing recommendation.

In addition, the proposed rule change codifies the factors to be considered by the Exchange in determining whether to list a recommended option. The Commission believes that the proposed factors represent legitimate issues that the Exchange may consider when making a listing decision. The Commission notes that if the Exchange denies or places conditions or limitations upon a proposed listing, it must include its reasons in the letter notifying the member of its decision. The Commission believes that this requirement should help to ensure that the Exchange relies on upon the factors codified in its rules when making a listing decision.

The Commission finds good cause for accelerating approval of Amendment No. 2 to the proposed rule change prior to the thirtieth day after publication in the **Federal Register**. The Commission notes that Amendment No. 2 provides useful clarification to the proposed

[1] 15 U.S.C. 78s(b)(1).

[2] 17 CFR 240.19b–4.

[3] *See* letter from Claire P. McGrath, Vice President and Special Counsel, Derivative Securities, Amex, to Elizabeth King, Associate Director, Division of Market Regulation (''Division''), Commission, dated April 16, 2001 (''Amendment No. 1''). Amendment No. 1 revises proposed Commentary .08 to Amex Rule 915 to require the Amex to maintain a record of any bona fide business considerations it relies upon in denying or placing limitations or conditions upon a proposal listing.

[4] Securities Exchange Act Release No. 44211 (April 23, 2001), 66 FR 21421.

[5] *See* letter from Claire P. McGrath, Vice President and Special Counsel, Derivative Securities, Amex, to Nancy Sanow, Assistant Director, Division, Commission, dated June 21, 2001 (''Amendment No. 2''). Amendment No. 2 revised Commentary .08 to Amex Rule 915 to clarify that when the Exchange relies upon other bona fide business considerations in denying or placing conditions or limitations upon a member listing proposal, the Exchange must provide the member with a written response specifying that the Exchange has relied upon other bona fide business considerations, in addition to maintaining a record of the bona fide business considerations supporting its decision.

[6] As part of a settlement of an enforcement action by the Commission, four of the five options exchanges, including the Amex, are required to adopt rules to codify listing procedures to be carried out when a member or member organization requests the exchange to list options not currently trading on the exchange. *See* Order Instituting Public Administrative Proceedings Pursuant to Section 19(h)(1) of the Securities Exchange Act of 1934, Making Findings and Imposing Remedial Sanctions, Securities Exchange Act Release No. 43268 (September 11, 200).

[7] In approving the proposal, the Commission has considered its impact on efficiency, competition, and capital formation. 15 U.S.C. 78c(f).

[8] 15 U.S.C. 78f(b)(5).

rules. Accordingly, the Commission finds that good cause exists, consistent with sections 6(b)(5)[9] and 19(b) of the Act,[10] to accelerate approval of Amendment No. 2 to the proposed rule change.

IV. Solicitation of Comments

Interested persons are invited to submit written data, views and arguments concerning Amendment No. 2, including whether the amendment is consistent with the Act. Persons making written submissions should file six copies thereof with the Secretary, Securities and Exchange Commission, 450 Fifth Street, NW., Washington, DC 20549–0609. Copies of the submission, all subsequent amendments, all written statements with respect to the proposed rule change that are filed with the Commission, and all written communications relating to the proposed rule change between the Commission and any person, other than those that may be withheld from the public in accordance with the provisions of 5 U.S.C. 552, will be available for inspection and copying at the Commission's Public Reference Room. Copies of such filing will also be available for inspection and copying at the principal office of the Amex. All submissions should refer to the File No. SR–AMEX–2001–14 and should be submitted by July 24, 2001.

V. Conclusion

It is therefore ordered, pursuant to Section 19(b)(2) of the Act,[11] that the proposed rule change (SR–AMEX–2001–14), as amended, is approved.

For the Commission, by the Division of Market Regulation, pursuant to delegated authority.[12]

Margaret H. McFarland,

Deputy Secretary.

[FR Doc. 01–16676 Filed 7–2–01; 8:45 am]

BILLING CODE 8010–01–M

[9] 15 U.S.C. 78f(b)(5).

[10] 15 U.S.C. 78s(b).

[11] 15 U.S.C. 78s(b)(2).

[12] 17 CFR 200.30–3(a)(12).

SECURITIES AND EXCHANGE COMMISSION

[Release No. 34–44466; File No. SR–BSE–2001–03]

Self-Regulatory Organizations; Notice of Filing and Order Granting Accelerated Approval of Proposed Rule Change and Amendment No. 1 Thereto by the Boston Stock Exchange, Inc. Relating to Its Specialist Performance Evaluation Program

June 22, 2001.

Pursuant to Section 19(b)(1) of the Securities Exchange Act of 1934 (''Act''),[1] and Rule 19b–4 thereunder,[2] notice is hereby given that on June 7, 2001, the Boston Stock Exchange (''Exchange'') filed with the Securities and Exchange Commission (''Commission'') the proposed rule change as described in items I and II below, which Items have been prepared by the Exchange. On June 15, 2001, the Exchange submitted Amendment No. 1 to the proposed rule change.[3] The Commission is publishing this notice to solicit comments on the proposed rule change, as amended, from interested persons and to grant accelerated approval to the proposed rule change, as amended.

I. Self-Regulatory Organizations Statement of the Terms of Substance of the Proposed Rule Change

The Exchange proposes to extend its SPEP Pilot until March 31, 2002. The text of the proposed rule change follows. New text is italicized.

Chapter XV

Specialists

Specialist Performance Evaluation Program

Sec. 17(a)–(e) no change

(f) This program will expire on March 31, 2002, unless further action is taken by the Exchange.

[1] 15 U.S.C. 78s(b)(1).

[2] 17 CFR 240.19b–4.

[3] In Amendment No. 1, the Exchange requested to have the one-year extension of its Specialist Performance Evaluation Pilot Program (''SPEP Pilot'') applied retroactively to April 1, 2001. In addition, the Exchange added rule text language that sets forth the expiration date of the SPEP Pilot. *See* letter from John A. Boese, Assistant Vice President, Rule Development and Market Structure, Exchange, to Nancy Sanow, Assistant Director, Division of Market Regulation, Commission, dated June 14, 2001 (''Amendment No. 1'').

II. Self-Regulatory Organization's Statement of the Purpose of, and Statutory Basis for, the Proposed Rule Change

In its filing with the Commission, the Exchange included statements concerning the purpose of and basis for the proposed rule change and discussed any comments it received on the proposed rule change. The text of these statements may be examined at the places specified in Item III below. The Exchange has prepared summaries, set forth in Sections A, B, and C below, of the most significant aspects of such statements.

A. Self-Regulatory Organization's Statement of the Purpose of, and Statutory Basis for, the Proposed Rule Change

1. Purpose

The Exchange seeks to have a one-year extension of its SPEP Pilot applied retroactively from April 1, 2001, until March 31, 2002.[4] Under the SPEP Pilot program, the Exchange regularly evaluates the performance of its specialists by using objective measures, such as turnaround time, price improvement, depth, and added depth. Generally, any specialist who receives a deficient score in one or more measures may be required to attend a meeting with the Performance Improvement Action Committee, or the Market Performance Committee.

While the Exchange believes that the SPEP Pilot has been a very successful and effective tool for measuring specialist performance, it realizes that modifications are necessitated as a result of recent changes in the industry, particularly decimalization. Accordingly, the Exchange is seeking to extend the pilot period of this program so that evaluation and modification can be undertaken before permanent approval is requested.

2. Statutory Basis

The statutory basis for the proposed rule change is Section 6(b)(5) of the Act,[5] in that the proposed rule change is designed to promote just and equitable principles of trade; to foster cooperation and coordination with persons engaged in regulating, clearing, settling, processing information with respect to, and facilitating transactions in securities; to remove impediments to and perfect the mechanism of a free and

[4] The SPEP Pilot expired on March 31, 2001. *See* Securities Exchange Act Release No. 42585 (March 28, 2000), 65 FR 17687 (April 4, 2000); *see also* Amendment No. 1, *supra* note 3 (requesting retroactive approval).

[5] 15 U.S.C. 78f(b)(5).

open market and a national market system; and in general to protect investors and the public interest; and is not designed to permit unfair discrimination between customers, issuers, brokers or dealers.

B. Self-Regulatory Organization's Statement on Burden on Competition

The Exchange does not believe that the proposed rule change will impose any burden on competition.

C. Self-Regulatory Organization's Statement on Comments on the Proposed Rule Change Received From Members, Participants, or Others

The Exchange has neither solicited nor received comments on the proposed rule change.

III. Solicitation of Comments

Interested persons are invited to submit written data, views and arguments concerning the foregoing, including whether the proposed rule change, as amended, is consistent with the Act. Persons making written submissions should file six copies thereof with the Secretary, Securities and Exchange Commission, 450 Fifth Street, N.W., Washington, D.C. 20549–0609. Copies of the submission, all subsequent amendments, all written statements with respect to the proposed rule change that are filed with the Commission, and all written communications relating to the proposed rule change and Amendment No. 1 thereto, between the Commission and any person, other than those that may be withheld from the public in accordance with the provisions of 5 U.S.C. 552, will be available for inspection and copying at the Commission's Public Reference Room. Copies of such filing will also be available for inspection and copying at the principal office of the Exchange. All submissions should refer to SR–BSE–2001–03 and should be submitted by July 24, 2001.

IV. Commission's Findings and Order Granting Accelerated Approval of Proposed Rule Change

The Commission finds that the Exchange's proposal to retroactively extend the SPEP Pilot from April 1, 2001 until March 31, 2002 is consistent with the requirements of the Act and the rules and regulation thereunder. Specifically, the Commission finds that the proposed rule change, as amended, is consistent with Section 6(b)(5) of the Act,[6] which requires that the rules of the Exchange be designed to promote just and equitable principles of trade, to remove impediments to and perfect the mechanism of a free and open market and a national market system, and, in general to protect investors and the public interest. The Commission believes that the retroactive extension of the SPEP Pilot should allow the Exchange to continue to assess specialist performance without interruption, while allowing the Exchange adequate time to consider amending the SPEP Pilot program in response to decimal pricing.

The Commission expects that during the SPEP Pilot the Exchange will continue to monitor threshold levels and propose adjustments as necessary and continue to assess whether each SPEP measure is assigned an appropriate weight.[7] In addition, the Exchange should continue to closely monitor the conditions for review and should take steps to ensure that all specialists whose performance is deficient and/or diverges widely from the best units will be subject to meaningful review. Finally, the Commission repeats its request that the Exchange incorporate additional objective criteria into the SPEP, most importantly, a measure of quote performance.[8] As previously noted, the Commission would have difficulty granting permanent approval to a SPEP that did not include a satisfactory response to the concerns described above.[9]

The Commission finds good cause for granting the Exchange's request for a twelve-month extension of the SPEP Pilot prior to the thirtieth day after the date of publication of notice of filing thereof in the **Federal Register**.[10] Among the obligations imposed upon specialists by the Exchange, and by the Act and the rules promulgated thereunder, is the maintenance of fair and orderly markets in their securities. To ensure that specialists fulfill these obligations, it is important that the Exchange be able to evaluate specialist performance. The Exchange's SPEP Pilot assists the Exchange in conducting its evaluation and accelerated approval of the proposed rule change permits the SPEP Pilot to continue on an uninterrupted basis. Therefore, the Commission believes good cause exists to approve the extension of the SPEP Pilot from April 1, 2001 until March 31, 2002, on an accelerated basis. Accordingly, the Commission finds that granting accelerated approval of the requested extension is appropriate and consistent with Sections 6(b)(5) and 19(b)(2) of the Act.[11]

It is therefore ordered, pursuant to Section 19(b)(2) of the Act,[12] that the proposed rule change, as amended, (SR–BSE–2001–03) is hereby approved on an accelerated basis through March 31, 2002.

For the Commission, by the Division of Market Regulation, pursuant to delegated authority.[13]

Margaret H. McFarland,

Deputy Secretary.

[FR Doc. 01–16637 Filed 7–2–01; 8:45 am]

BILLING CODE 8010–01–M

[6] 15 U.S.C. 78f(b)(5).

[7] *See* Securities Exchange Act Release No. 39730 (March 6, 1998), 63 FR 12847 (March 16, 1998) (order approving amendment to SPEP Pilot). In Securities Exchange Act Release No. 39730, the Commission stated certain terms and conditions for approving the SPEP Pilot program on a permanent basis, including the need to provide a study to the Commission regarding the SPEP Pilot program. Those terms and conditions are hereby incorporated by reference.

[8] *Id.*

[9] *Id.*

[10] In approving this proposal, the Commission has considered its impact on efficiency, competition, and capital formation. 15 U.S.C. 78c(f).

[11] 15 U.S.C. 78f(b)(5) and 78s(b)(2).

[12] 15 U.S.C. 78s(b)(2).

[13] 17 CFR 200.30–3(a)(12).

SECURITIES AND EXCHANGE COMMISSION

[Release No. 34–44476; File No. SR–BSE–2001–01]

Self-Regulatory Organizations; Notice of Filing of Proposed Rule Change and Amendment No. 1 Thereto by the Boston Stock Exchange, Inc. Relating to the Trading of Nasdaq Securities on the Floor of the Exchange

June 26, 2001.

Pursuant to Section 19(b)(1) of the Securities Exchange Act of 1934 (''Act''),[1] and Rule 19b–4 thereunder,[2] notice is hereby given that on May 15, 2001, the Boston Stock Exchange, Inc. (''BSE'' or ''Exchange'') filed with the Securities and Exchange Commission (''SEC'' or ''Commission'') the proposed rule change as described in Items I, II, and III below, which Items have been prepared by the Exchange. On June 15, 2001, the Exchange submitted Amendment No. 1 to the proposed rule change.[3] The Commission is publishing this notice to solicit comments on the proposed rule change from interested persons.

[1] 15 U.S.C. 78s(b)(1).

[2] 17 CFR 240.19b–4.

[3] *See* Form 19b–4 dated June 14, 2001 (''Amendment No. 1'').

I. Self-Regulatory Organization's Statement of the Terms of Substance of the Proposed Rule Change

The Exchange seeks to add Chapter XXXV, Trading in Nasdaq Securities, to the Rules of the Board of Governors of the Boston Stock Exchange (''BSE Rules''). The proposed chapter sets forth rules governing the trading of Nasdaq securities on the Exchange. The text of the proposed rule change follows in italics.

Chapter XXXV

Trading in Nasdaq Securities

All of the Rules, Policies, and Procedures, set forth in the Rules of the Board of Governors of the Boston Stock Exchange (''Boston Stock Exchange Rules''), and elsewhere, shall apply to the trading Nasdaq securities in the same way as they do to the trading of non-Nasdaq securities, with the addition of the rules set forth in this Chapter XXXV, detailed below.

Definitions

Sec. 1. (a) ''Nasdaq security''—any security listed on the Nasdaq National Market or Nasdaq Small Cap Market.

(b) *''Nasdaq System''—the NASD's Automated Quotation System.*

(c) *''listed security''—a stock or bond, other than a Nasdaq security, that has been accepted for trading by the Boston Stock Exchange, or any of the other registered securities exchanges in the United States.*

Order Transmission

Sec. 2. (a)(i) Each Exchange specialist shall provide direct telephone access to the specialist post to Nasdaq System market makers, acting in their capacity as market makers, for each Nasdaq security in which the market maker is registered as a market maker. Access shall include appropriate procedures which assure the timely response to telephonic communications. Nasdaq System market makers may use such telephone access to transmit orders for execution on the Exchange.

Any order received on the floor via telephone from a Nasdaq System market maker shall be effected in accordance with the rules applicable to the making of bids, offers and transactions on the Floor (see Chapter II, Dealings on the Exchange, Chapter XV, Specialists). All limit orders shall be immediately displayed upon receipt, in accordance with Chapter II, Dealings on the Exchange, Section 40, Limit Order Display Rule.

(ii) Exchange specialists may send orders from the Floor for execution via telephone to any Nasdaq System market maker in each Nasdaq security in which it is registered as specialist. All of the Boston Stock Exchange Rules related to the trading of securities shall be applicable to bids and offers transmitted via telephone, in the same way as they apply to orders transmitted via automated trading systems.

(iii) Comparisons of transactions effected with a Nasdaq System market maker via telephone access will be made pursuant to procedures to be established between Nasdaq and the Exchange.

(b) Orders may be transmitted to a specialist via Nasdaq Workstation II (''NWII'') at the election of a Nasdaq market maker originating the order. Orders transmitted through NWII may be executed by the system automatically or on a manual basis in accordance with the provisions of this Chapter XXXV.

(c) Specialists will have ''Level 3 Service,'' as defined by the Nasdaq Unlisted Trading Privileges Plan, on the Nasdaq System. As such, specialists will have input and query ability with respect to quotations and sizes in securities included in the Nasdaq System. Access to the specialist via the Nasdaq System will be limited to floor brokers, BSE members, NASD members, NAS non-BSE members (including Electronic Communications Networks), and certain other member firms and other professionals represented by member firms (''clients''). Clients may have access to enter orders to the specialist either electronically, through the Nasdaq System, or telephonically. Any order received by the specialist telephonically, or verbally in any manner other than electronically through the Nasdaq System must be memorialized in accordance with Chapter II, Dealings on the Exchange, Section 2, Recording of Sales, and Section 15, Record of Orders from Offices to Floor.

(d) Access to the specialist via the Nasdaq System, or electronic access, includes

(i) orders sent by clients through Nasdaq's ACES Pass Thru capability (which consolidates orders sent by various client systems to the Nasdaq System);[4]

(ii) orders sent by BSE floor brokers directly through the BSE Nasdaq trading system (currently Nasdaq Tools);[5]

(iii) orders sent by clients directly into the Nasdaq System and routed to the specialist; and,

(iv) orders sent by Nasdaq and NASD Market Makers through the Nasdaq System.

Reporting of Transactions

Sec. 3. All transactions in Nasdaq securities shall be reported through the Automated Confirmation Transaction Reporting Service (''ACT''), in accordance with NASD Rule 4630, et. seq., unless other arrangements are made with, and approved by, the Exchange. Any transaction for which electronic submission into ACT is not possible must be reported to the NASD's Market Regulation Department on Form T as specified in paragraph (a)(5) of NASD Rule 4632.[6]

Trading

Sec. 4. (a) Automatic Execution of Nasdaq orders. If the specialist is quoting at the National Best Bid or Offer (''NBBO'') at the time a market or marketable limit order is received, the order shall automatically be filled at the NBBO up to the size of the specialist's bid or offer. The specialist's bid or offer will be decrementated by the size of the execution. In the event that the specialist's bid or offer is exhausted, the system will generate a quote at an increment away from the NBBO as determined by the specialist from time to time, for 100 shares. If the specialist is not quoting at the NBBO at the time a market or marketable limit order is received, such order shall be automatically filled at the NBBO up to the size of the auto-execution threshold if the specialist has not, within 20 seconds after receipt of the order, complied with the manual execution requirement detailed below. The automatic-execution guarantee only applies to orders which are equal to or less than the size of the auto-execution parameter.

(b) In Nasdaq securities, the auto-execution parameter must be set at 300 shares or greater. For the purposes of this rule, odd-lot orders will be considered to be round lot orders for the purposes of rounding up to the size of the auto-execution guarantee parameter. An odd-lot order shall not increase the size of the execution guarantee to an amount greater than the auto-execution parameter. Rather an odd lot order would be added to any round lots less than the size of the auto-execution parameter and the execution guarantee would apply only to that number of shares, which would be less than or equal to, but in no case greater than, the size of the auto-execution guarantee.

[4] The Commission notes that Amendment No. 1 contained an incorrect reference, which BSE intends to correct in a future amendment to the proposed rule change.

[5] *Id.*

[6] *Id.*

(c) In unusual trading situations, specialists may switch from automatic execution to manual execution mode. ''Manual execution mode'' shall include any instance in which a specialist reduces the auto execution threshold below the minimum set forth in paragraph (b) of this section 4. For the purposes of this rule, ''unusual trading situations'' for Nasdaq securities include the existence of large order imbalances or significant price volatility. If a specialist elects to switch to manual execution mode based on the existence of unusual trading situations, the specialist must (1) document the basis for election of a manual execution mode; and (2) in the event that the specialist remains in manual execution mode for more than ten minutes, seek relief from the requirements of this section 4 from two floor officials.

All automatic execution parameters and practices shall be in accordance with NASD Rule IM–2110–02, Trading Ahead of Customer Limit Orders, and NASD Rule IM–2110–3, Front Running Policy.

Sec. 5. Manual Execution of Nasdaq securities. With respect to agency market or marketable limit orders in Nasdaq securities which have a size equal to or less than the auto execution threshold but which are not auto-executed under the provisions of this Chapter, a specialist shall be obligated to either (i) manually execute such orders at the NBBO in existence when the order is received or better, or (ii) act as agent for such orders in seeking to obtain the best available price for such orders on a marketplace other than the Exchange.

Preopenings/Trading Halts

Sec. 6. Pre-opening orders in Nasdaq securities must be accepted and filled at the Exchange opening trade price. In trading halt situations, orders will be executed based on the Exchange reopening price. (Note: In the case of a trading halt in a Nasdaq security, notice will be provided via the Nasdaq ''NEWS'' frame, in accordance with NASD Rule 4120.)

Orders To Buy and Sell the Same Security

Sec. 7. Pursuant to Chapter II, Section 18, Orders to Buy and Sell the Same Security, for cross transactions in Nasdaq securities,[7] a specialist must refrain from interfering at the cross price with an agency cross which is to be effected at a price between the disseminated Exchange market, unless the specialist is willing to better one side of the cross.

When a member has an order to buy and an order to sell an equivalent amount of the same security, and both orders are for 5,000 shares or more and are for accounts other than the accounts of the executing member, the member may cross such orders at a price which is at or within the prevailing bid or offer. The member's bid or offer shall be entitled to priority at such cross price, provided that the proposed cross transaction is of a size greater than the aggregate size of all of the interest communicated on the Exchange floor at that price. Another member may trade with either the bid or offer side of the presented cross transaction only to provide a price which is better than the cross price as to all or part of such bid or offer. A member who is providing a better price to one side of the cross transaction must trade with all other market interest having priority at that price before trading with any part of the cross transaction.

Dealings on Floor—Hours

Sec. 8. Pursuant to Chapter I–B, Sec. 2, Dealings on the Floor—Hours, no member or member organization shall make any bid, offer or transaction upon the floor of the Exchange, issue a commitment to trade through ITS or send an order for a Nasdaq security to a Nasdaq System market maker other than during the hours the Exchange is open for the transaction of business. Nasdaq securities will not be eligible to participate in the Post Primary Session.

Order Acceptance Guarantee

Sec. 9. An Order Acceptance Guarantee shall be available to each member firm in all Nasdaq securities traded on the Exchange. Specialists must accept all agency market and marketable limit orders in Nasdaq securities up to and including 1000 shares in accordance with this rule. Specialists must accept all agency non-marketable limit orders in Nasdaq securities up to and including 10,000 shares for placement in the limit order book.

An Exchange specialist in a Nasdaq security shall only be obligated to guarantee execution on the first agency market order placed with him by a Floor broker or other Floor member, at any given best bid or offer. Subsequent to any such execution, the specialist may, but shall not be obligated to, guarantee the execution of such price of other orders placed with him.

Specialist's Responsibilities

Sec. 10. (a) Orderly Markets. In accordance with the responsibilities of specialists, as set forth in Chapter XV, Specialists, Sec. 2., Responsibilities, in relation to Nasdaq securities, an ''orderly market'' is defined as one with regularity and reliability of operation manifested by the presence of price continuity and depth exhibited by the avoidance of large and unreasonable price variations between consecutive sales on the Nasdaq system and the avoidance of overall price movements without appropriate accompanying volume.

A specialist in a Nasdaq security is responsible for insuring that each opening and reopening price in respect to Nasdaq securities reflects a professional assessment of market conditions at the time with due consideration being given to the balance of supply and demand as reflected by public orders. Additionally, the specialist should insure that the opening is not unduly hasty, particularly when at a price disparity from the previous close, and that the price reflects a thorough and professional assessment of market conditions at the time.

(b) Best Execution. Specialists dealing in Nasdaq securities shall use diligence to ascertain the best market for a particular security and provide the customer with a price which is as favorable as possible under the prevailing market conditions. Furthermore, no specialist shall interject a third party between himself and the best available market unless he can demonstrate that the total costs of the resultant transactions was better that the prevailing inter-dealer market for the security.

Registration of Specialists

Sec. 11. Specialists who wish to trade Nasdaq securities must be registered and qualified by the Exchange. As such, they must first make application to and be approved by the Exchange. In addition, and in accordance with the requirements set forth in Chapter XV, Specialists; Chapter XX, Employees for the Solicitation of Business; Chapter XXV, Registration of Member-Corporations; and elsewhere, specialists who trade Nasdaq securities will be required to:

(1) Be associated with an existing or newly created specialist unit approved by the Exchange, in accordance with all applicable rules, policies and procedures; and,

(2) Successfully complete the Boston Stock Exchange Floor Exam, including

[7] *Id.*

the sections regarding Nasdaq trading; and,

(3) Obtain a Series 63, NASAA Uniform State Law Exam, license; and,

(4) If conducting business with the public, obtain a Series 7, General Securities Representtive, license under the sponsorship of a NASD registered Broker-Dealer; and,

(5) Complete a training period as deemed adequate by the Market Performance Committee; and,

(6) Ensure that the specialist unit with which he is associated meets all of the Exchange's financial requirements, as set forth in Chapter VII, Minimum Amount of Margin on Transactions Made During the Course of a Single Day in Accounts of Members, Allied-Members and Member-Organizations, Chapter IX, Unissued Securities—Margin Requirements, Chapter XXII, Financial Reports and Requirements—Aggregate Indebtedness—Net Capital, Chapter XXII–A, Blanket and Fidelity Bonds, and elsewhere.

Limitations on Specialists

Sec. 12. Any individual member who is registered as a specialist is not permitted to maintain a book, as defined in Chapter XV, Specialists, Section 6, The Specialist's Book, in both Nasdaq securities and listed securities. Nasdaq securities must comprise a separate book which must be solely traded by a separate specialist. A specialist who is qualified under the provisions of this Chapter XXXV, and the provisions of Chapter XV, Specialists, Section 1, Registration, to trade either listed or Nasdaq securities, or both, cannot accept orders in, nor effect transactions in, both types of securities, at the same time.

Nothing in this section shall preclude any duly qualified specialist from occasionally substituting for, or acting as an alternate for, another specialist in either listed or Nasdaq securities, in accordance with Article XVI of the Constitution of the Boston Stock Exchange, Officers and Associates, Section 7, Alternatives for Members Absent. A specialist substituting for another specialist in accordance with the provisions of this section will be permitted to trade both Nasdaq and listed securities at the same time, during the period of substitution. In the case of an extended or permanent absence of a specialist qualified to trade Nasdaq securities, the firm from which the specialist is absent must promptly notify the Exchange and make arrangements to permanently replace the absent specialist in a reasonable amount of time, as determined by the Exchange. The Exchange reserves the right to temporarily reassign some or all of the Nasdaq securities comprising an absent specialist's book in the event that a firm does not make suitable or timely arrangements for the replacement of the absent specialist.

Floor Clerks

Sec. 13. A qualified clerk under the control and supervision of a specialist may assist the specialist, in accordance with Chapter I–B, Section 3, Dealings on Floor—Persons.

Odd-Lots and Odd-Lot Dealers

Sec. 14. Notwithstanding any of the requirements regarding Odd-Lots and Odd-Lot dealers set forth in Chapter XII, Odd-lot Dealers in Securities the Primary Market for Which is on Another Exchange, Chapter XIII, Odd-Lot Dealers in Fully Listed Securities Having a Primary Market on this Exchange, Chapter II, Dealings on the Exchange, Chapter V, Units of Delivery—Payment for Deliveries—Transfers, a member or member organization registered as a specialist in a Nasdaq security shall automatically be registered as the Odd-Lot Dealer in such security. Market orders will be accepted for execution as an odd-lot based on the best bid disseminated pursuant to SEC Rule 11Ac1–1 on a sell order, or the best offer disseminated pursuant to SEC Rule 11Ac1–1 on a buy order in effect at the time the order is presented at the specialist post, provided the order is for a number of shares less than full lot in said stock.

Synchronization of Business Clocks

Sec. 15. In accordance with NASD Rule 6953, each specialist trading Nasdaq securities shall synchronize his business clocks with a time source as specified by Nasdaq.

Capital and Equity Requirements

Sec. 16. Pursuant to Chapter XXII, Financial Reports and Requirements—Aggregate Indebtedness—Net Capital, Section 2, Capital and Equity Requirements, each member firm involved in the trading of Nasdaq securities shall maintain a liquidating equity for each specialist account of not less than $200,000 in cash or securities. This equity requirement, as well as all other provisions of the section (including capital maintenance requirements), applies to each specialist account, without regard to the number of specialist accounts per firm.

Margin Procedures

Sec. 17. The Boston Stock Exchange Clearing Corporation will provide margin financing for approved specialists dealing in Nasdaq securities, subject to the requirements and guidelines set forth in Chapter VIII, Minimum Amount of Margin on Transactions Made During the Course of a Single Day in Accounts of Members, Allied-Members, and Member-Organizations. For the purposes of this rule, transactions in Nasdaq securities will be considered to have been effected on the Boston Stock Exchange, and Nasdaq securities will be considered to be classified as stocks.

Limitations on Trading Nasdaq Securities

Sec. 18. (a) Minimum Number of Nasdaq securities. The first specialist in a firm will be required to register in and trade at least 20 Nasdaq securities. A specialist associated with a member firm, and associated with another specialist registered in the minimum number of BSE traded stocks shall register and act as specialist in not less than 15 Nasdaq securities.

(b) Minimum Holding Period for Nasdaq securities. Any stock awarded or assigned to a specialist must be held by the specialist for at least 6 months (excluding unprotected allocations), and the specialist is required to actively trade and maintain a market in each security in which he is registered.

Application Procedure

Sec . 19. Specialists are required to apply for registration in Nasdaq securities by utilizing either the UTP Form or the Add/Drop Form, depending on the status of the security being applied for. The allocation process will take place as specified elsewhere in this chapter.

Consistent with general Exchange stock allocation procedures, a specialist who first requests registration in an established Nasdaq security will generally be allocated that security, except where the performance of the specialist has been called into question. In that event, the Stock Allocation Committee may elect to competitively allocate that security.

New Listing or New UTP

Sec. 20. A specialist may apply to trade a newly admitted Nasdaq security, pursuant to the Nasdaq UTP plan (which permits trading of UTP admitted securities) as well as those newly dually listed. Such application will be subject to the allocation process.

Allocation of Nasdaq Securities

Sec. 21. The following procedures regarding the initial allocation of Nasdaq securities are designed to ensure an equitable representation of

member support of Nasdaq securities trading on the Boston Stock Exchange. They are structured so as to protect the firms who have established Nasdaq operations on the floor of the Exchange, while at the same time providing an opportunity for new interest and growth of this program in the foreseeable future from firms seeking to trade Nasdaq securities on the Exchange through meaningful stock allocations. Priority for admittance will be based on the date that the new firm becomes qualified to trade Nasdaq securities on the Exchange, as determined by Exchange staff. These procedures will remain in place for a two-year maturation period, following approval and commencement of trading. At the conclusion of this period, the Exchange will review the process and establish permanent Nasdaq security allocation procedures.

It should be understood that the registration rights to any Nasdaq securities awarded under this program through the allocation process may be transferred, rescinded or withdrawn by the Exchange. The initial two-year maturation period, by design, may entail the reallocation of an ''unprotected'' security. Further, any such specialist unit must continuously maintain fair and equitable markets in all issues assigned to it and may not for any reason transfer, sell or otherwise shift the benefit or responsibilities for trading securities awarded to it to another member firm. The Exchange will promptly initiate steps to reassign such trading privileges as deemed necessary if such circumstances arise. A minimum six-month holding period will be strictly enforced. The intent of this program is to establish competitive and liquid markets through solid support and a sustained commitment by its members.

Note: A firm may swap allocated stocks, with other existing and established BSE Nasdaq trading participants, in accordance with Section 25 of this Chapter XXXV. Further, in limited and exceptional circumstances, a member firm may petition the Executive Committee of the Exchange for permission to sell or otherwise transfer its Nasdaq trading privileges to another member firm prior to the end of the mandated six-month holding period. The responsibility to provide sufficient and justifiable reasons to seek such approval will be on the member firm registrant and must overcome the intent of this allocation process for a sustained commitment by such member. (Factors will include length of time trading, number of issues in each category and whether the proposed transferee is a new applicant.) The Executive Committee will evaluate any such request on its merits, and will ultimately base its decision on its determination of whether such a transfer is in the best interests of the Exchange. The Executive Committee's decision in such a case shall be final.*

**Under certain circumstances, the Exchange (Executive Committee or its designated representative) may temporarily reassign some or all of the securities in question until an acceptable arrangement can be reached.*

Allocation Procedures

Any member firm currently trading listed securities on the Exchange may apply for Nasdaq trading privileges, but may not drop listed securities in order to seek allocation of Nasdaq securities. The Exchange's goal is to establish a new product, which will expand the number of stocks available for execution on the BSE, rather than to replace or substitute its current market for listed securities.

The following procedures pertaining to the allocation of Nasdaq securities ***apply on a member firm basis,*** *regardless of the number of specialists trading Nasdaq securities within a particular firm. The minimum number of stocks per book pursuant to this Chapter XXXV, Sec 18, will be 20 for the first specialist in a member firm and 15 for subsequent specialists in that same member firm. The initial allocation of Nasdaq securities will be limited to those member firms approved by the Exchange as of commencement date, and will be limited to those firms for the first 30 days.*

Following this initial allocation, other firms may apply for Nasdaq securities, provided that they have met all of the requirements and have been approved by the Exchange to trade Nasdaq securities, as set forth in this Chapter XXXV, and elsewhere. The procedures for the allocation of Nasdaq securities will be based in part on the trading volume in Nasdaq securities and are as follows:

Note: *The determination of which securities fall within the categories below (i.e., the top 100, top 300, etc.) will be based on the ranking on Nasdaq securities by the National Association of Securities Dealers, and published on the appropriate Nasdaq website as of the end of the preceding calendar quarter.*

After the initial 30-day period, commencing on a date the Exchange specifies as the official start date of the trading of Nasdaq securities on the floor of the Exchange (''start date''), other qualified firms may apply for allocation of Nasdaq securities from the pool of unallocated securities. After an ensuing 30-day period (i.e. 60 days from the start date), each firm who is actively trading Nasdaq securities at the time a new firm applies for allocation (''existing firm'') of Nasdaq securities may protect (''freeze'') securities registered to it within the rankings noted below and at the times ***as specified below.*** *The remaining (''unprotected'') securities that the firm is trading will be available for re-allocation to a new firm (including any new firms which commenced trading 30 days after the start date), although no new firm may take more than 30% from within each of the four rankings of any one existing firm's (''unprotected'') securities available for allocation. Thus, existing firms will not have their entire inventory, above the securities it has frozen, subject to reallocation at any one time, by any one firm. Notwithstanding this 30% provision, a new firm may seek reallocation of the at least one uprotected secrity for an existing firm, if 30% of the existing unprotected securities is less than one, and provided that the number of unprotected securities exceeds the freeze limits as set forth below. An existing firm will be able to freeze securities each time a new firm applies for allocation during the first six months of Nasdaq trading, according to the following restrictions:*

Category 1—10 securities of the top 100
Category 2—20 securities from those rated 101–300
Category 3—20 securities from those rated 301–500
Category 4—20 securities from those rated 501 and above

Note: *After the initial allocation of securities to those firms which are initially participating in the trading of Nasdaq securities, the Exchange reserves the right to reallocate any number of securities above 25 per firm which the firm has been initially allocated from the top 100 ranked securities, if it determines that it is in the best interest of the Exchange and the overall Nasdaq program.*

As an example, assume four firms initially apply for, and receive allocations as follows:

Category	1	2	3	4
Firm A	25	25	25	25
Firm B	20	25	20	20
Firm C	25	20	20	20
Firm D	25	50	100	0

If ***Firm E*** *applies for allocations during this initial six month period,* ***Firm A*** can freeze 10 of the securities it has been allocated from the top 100 and 20 from each of the three remaining categories. Thus 15 securities from category 1, and 5 securities from categories 2, 3, and 4 would be available to ***Firm E.*** *However, due to the 30% restriction, only 5 securities (30% × 15 unprotected) from category 1 and 2 securities from categories 2, 3, and 4 could be reallocated from Firm A.*

Firm B *would be able to freeze 10 of the 20 securities which it had been allocated from the top 100, although only 3 of the unprotected securities could be reallocated to Firm E. Likewise, Firm B would be able to freeze 20 of the securities which it had been allocated from category 2, and could lose up to 30%, or 2 securities from category 2 to Firm E. Categories 3 and 4 would be protected.*

Firm C *would be able to freeze all of the securities it has been allocated in categories 2, 3, and 4 but could lose 5 of the 15 unprotected securities in category 1.*

Firm D *would be able to freeze 10 of the securities it has been allocated from the top 100 (category 1). 30% of 30, or 9 securities, would be available from category 2, and 24 securities from category 3 would be available.*

Note: *Firm E, and any subsequent new firms applying for allocation, can not exceed the same restriction levels as set forth above (i.e., 10 of the top 100 or 20 from categories 2, 3, or 4) in total from the composite of issues drafted from the allocated but unprotected portions of existing Nasdaq books. It could however, request additional allocation from the remaining ''unallocated'' issues in any category. The intent here is to maintain an equitable distribution of protected stocks among the participants during this initial period of reallocations to new firms.*

Now, assume ***Firm G*** *is approved and applies for allocation one month after Firm E. Firms A through E would all be subject to reallocation under the same guidelines as above. Firms A–E would not be exempt from any future allocations, but would be able to freeze the prescribed amount of securities each time a* ***new*** *firm applies for allocation. Firm G, likewise, is subject to future allocations under the same guidelines.*

Note: *In the event an existing firm seeks additional allocations at any point during the two-year maturation period, notice will automatically be given to all other existing firms of the allocation request, allowing the other existing firms the opportunity to compete for allocation in the requested securities, within a prescribed time frame. The intent of this provision is to ensure fairness to all firms during maturation and evaluation stages of the Nasdaq stock allocation process. Additionally, no existing firm will be permitted to seek reallocation of unprotected securities from any other existing firm(s).*

After the first six months from commencement of trading, and at each six-month anniversary interval through the remainder of the two-year maturation period, firms will be able to freeze an additional number of securities, as established by the Exchange, within each category. As the ***example*** *below indicates these additional protective limits will depend upon the remaining number of unprotected securities available in each category.*

Category 1—3 additional securities within the top 100
Category 2—6 additional securities from those rated 101–300
Category 3—6 additional securities from those rated 301–500
Category 4—6 additional securities from those rated 501 and above

In certain, limited circumstances, an existing specialist may object to the re-allocation of a particular unprotected security or securities. In such a case, both the existing firm and the new firm will be asked to present to the Market Performance Committee (''MPC'') their reasons for objecting to or supporting the allocation request. Existing firms will not be permitted to make blanket objections to having their unprotected securities reallocated, and they will be required to set forth tangible rationale justifying their objections. Likewise, new firms must justify their allocation requests. The firms will be allowed to present any documentation, testimonials or other relevant evidence supporting their position which they feel would benefit the MPC in their determination of whether the security[ies] in question should be allocated as requested, including, but not limited to, reasons based on market quality, payment for order flow, customer relationships, or other factors considered to be in the best interests of the Exchange's markets. The MPC will, based on the presentations and evidence, ultimately decide whether or not a particular security[ies] should be allocated to the new firm. The decision of the MPC can be appealed to the Board of Governors of the Exchange, whose decision shall be final. During the allocation request period, and any subsequent periods of committee deliberations and/or appeals, the security[ies] in question shall remain in the control of, and actively traded by, the existing firm.

The Exchange may limit the frequency and dates for allocation to additional participants in order to evaluate the impact of reallocations during this two-year maturation period. Although more than one new firm may be approved to begin trading Nasdaq securities on the floor of the Exchange at the same time, the first firm to be approved, chronologically, will be the first allowed to seek reallocation of securities from existing forms. Any such reallocation which may take place will result in new compositions of existing firm's books. Subsequently approved new firms may seek reallocations from the newly composed books of the existing firms. In this way, existing firms are further protected from the possible burden of contemporaneous reallocations. The Exchange will monitor the effectiveness of the program in order to ensure that no disruption of markets will result from frequent reallocations among member firm specialists, and reserves the right to alter this stock allocation process at any time.

Finally, in the event that the number of protected securities (i.e., 10 firms with 10 each in the top 100) matches the limit within a particular category prior to the two year maturation period, the Exchange may re-evaluate those remaining securities unprotected to provide some form of meaningful competitive allocation process to ensure continued growth of this program. Following the two-year period the Exchange will examine its overall program to ensure competitive quality markets are maintained. All allocations regardless of the class or category of registration are subject to review by the Exchange pursuant to its Specialist Performance Evaluation Program (''SPEP'').

Criteria for Stock Allocation Committee To Consider During Nasdaq Security Allocation

Sec. 22. In considering the allocation of Nasdaq securities, the Stock Allocation Committee shall consider the following factors, among other, giving proper weight to each of these measures as it sees fit, while maintaining consistency with previous decisions:

- *Specialist Performance (SPEP)*
- *Specialist experience generally*
- *Specialist experience trading Nasdaq securities*
- *Specialist contributions to the market quality of the Boston Stock Exchange*
- *Specialist's reputation as to quality to executions*
- *Length of time elapsed since last allocation to specialist*
- *''Quality'' of Nasdaq securities in specialist's book, in terms of volume, liquidity and volatility*
- *Specialist's reasons for seeking to trade the security, as set forth in his application and/or supplemental materials*
- *Documented marketing concerns of specialists form, e.g., order flow arrangements which are contingent on the retention of certain securities*
- *Market Quality criteria as set forth under the requirements of SEC Rules 11Ac1–5 and 11Ac1–6*

Change in Listing Status of Nasdaq Security

Sec. 23. (a) If a company which has its security solely registered as a Nasdaq security transfers to become an exchange listed security, or in the event of a merger of a Nasdaq security company with a listed security company whereby the listed company is the ''survivor'' of the merger, the firm whose specialist was registered in the Nasdaq security shall be given preference to register to trade the listed security (subject to acceptable performance), provided that:

(1) the firm is eligible to trade, and currently registered in at least the minimum number of, as well as involved in the trading of, listed securities on the Exchange;

(2) no other member firm is currently registered in and trading the listed security of the surviving company. If another member firm is currently registered in the surviving company's listed security, that member firm will be allowed to continue to trade the security, whether registered as a primary or a competing specialist. The firm who originally traded the Nasdaq security of the company which was not a survivor of a merger, or which transferred its status and became an exchange listed security, will be eligible to apply as a competing specialist in that security, provided that all of the other requirements related to the trading of listed securities on the floor of the Exchange are met.

(b) In the event that a company changes its status from a listed security to become registered as a Nasdaq security, allocation preference will be provided to the firm which traded the listed security prior to its status change, provided that the firm is eligible to trade, and engaged in the trading of, Nasdaq securities. If the firm is not eligible to trade the newly registered Nasdaq security, the security's allocation will be subject to standard allocation procedures as outlined in this section, including, if necessary, deliberation and determination of allocation by the Stock Allocation Committee.

Merger of Two Nasdaq Securities

Sec. 24. In the event of a merger of two companies whose securities are both registered as Nasdaq securities, with the resultant company's security remaining registered as a Nasdaq security, the surviving company's security shall be subject to Exchange allocation procedures governing such actions. As such, if two separate member firms are registered in the separate Nasdaq securities prior to the merger, the allocation of the resultant security shall be subject to the following:

(1) If the surviving company remains in control of the newly formed or merged company, as determined by Exchange staff, the member firm, which was originally registered in the security of the surviving company, shall retain that security.

(2) If Exchange staff cannot determine the control of the surviving company, the Stock Allocation Committee, taking all relevant factors into consideration, shall determine the allocation of the security of the surviving company.

Swapping Stocks

Sec. 25. Specialists shall be permitted to swap stocks on an ''as requested'' basis, subject to the following:

(1) Specialists who are interested in swapping stocks with another specialist are responsible for initiating and engaging in negotiations to arrange for the swap.

(2) Swapping of stocks must take place between two separate specialist firms.

(3) Specialists, may swap up to three stocks every six months, and must retain any swapped stocks for at least six months.

(4) Swapping for the intention of circumventing assignment, reassignment or any other procedures regarding Nasdaq securities is strictly forbidden.

(5) All swap arrangements must be submitted to the MPC for review, on the Stock Swap Agreement form.

(6) Repetitive stock swaps between two or more firms, or otherwise, for stock retention or any other purpose, are forbidden.

Specialist Request to Deregister in a Nasdaq Security

Sec. 26. Generally, a specialist will be permitted to drop an allocated Nasdaq security, provided that a period of at least six months has elapsed since the original assignment. If a specialist is approved for deregistration in a Nasdaq security, the effective date of the deregistration will be no earlier than 5 days after notice is provided to all order sending firms and other floor specialists registered to trade Nasdaq securities that the specialist is deregistering in such security.

Disciplinary Action

Sec. 27. As detailed in Chapter XV, Dealer Specialists, Section 17, Specialist Performance Evaluation Program, one possible sanction in the Exchange's disciplinary system regarding poor performance of specialists is the temporary or permanent cancellation of a specialist's registration in one or more securities. Should this occur, the MPC will temporarily assign the security[ies] affected to another specialist. If the disciplinary action is, or becomes, permanent, the security[ies] will be available for assignment under the current stock allocation procedures.

Short Sales

Sec. 28. No specialist shall effect a short sale for the account of a customer or for his own account in a Nasdaq security at or below the current best (inside) bid when the current best (inside) bid is below the preceding best (inside) bid in the security.

The provisions of this rule shall not apply to short sales by specialists that are in furtherance of the specialist's bona fide market making activities. Bona fide market making activity does not include activity that is unrelated to market making functions, such as index arbitrage and risk arbitrage that is independent from a member's market making functions. In the event that a short sale does occur pursuant to this bona fide market making exception, the burden is on the specialist to show that such sale was in furtherance of their bona fide market making activities.

Discussion

Any activity by a specialist which is designed to circumvent this Short Sale rule through indirect actions, such as executions with other specialists or the facilitation of customer orders while being protected from loss are antithetical to the purposes of this rule, as are any manipulative type actions. For example, it would be considered a manipulative act, and in violation of this rule if either of the following occurred:

(1) A specialist alone at the inside best bid lowered its bid and then raised it to create an ''up-bid'' for the purpose of facilitating a short sale.

(2) A specialist with a long position raised its bid above the inside bid and then lowered it to create a ''down-bid'' for the purpose of precluding other market participants from selling short.

(3) a specialist agrees with another specialist or a customer to raise its bid in order to effect a short sale for the other party and is protected against loss on the trade or any other executions effected at its new bid price.

(4) a specialist entered into an agreement with another market participant or customer whereby it uses its exemption from this rule to sell short at successively lower prices, accumulating a short position, and subsequently offsetting those sales through a transaction at a prearranged

price, for the purpose of avoiding compliance with this rule, and with the understanding that the specialist would be guaranteed against losses on those trades.

Non-Liability of Exchange

Sec. 29. In accordance with Article IX, Section 10 of the Exchange Constitution, the Exchange shall not be liable for any loss sustained by a member or member organization resulting from the use of, or reliance on, the system through which the Exchange provides its members access to trade Nasdaq securities. Generally, a loss pertaining to an order that is entered through the BSE Nasdaq trading system that does not appear on a saved file will be absorbed by the entering member organization. A loss pertaining to an order that is entered through the BSE Nasdaq trading system which was designated for a particular specialist's post and which does appear on a saved file within the system will generally be absorbed by the specialist.

II. Self-Regulatory Organization's Statement of the Purpose of, and Statutory Basis for, the Proposed Rule Change

In its filing with the Commission, the Exchange included statements concerning the purpose of and basis for the proposed rule change and discussed any comments it received on the proposed rule change. The text of these statements may be examined at the place specified in Item IV below. The Exchange has prepared summaries, set forth in Sections A, B, and C below, of the most significant aspects of such statements.

A. Self-Regulatory Organization's Statement of the Purpose of, and Statutory Basis for, the Proposed Rule Change

1. Purpose

According to the Exchange, the purpose of the proposed rule change is to set forth rules regarding the trading of certain over-the-counter (''OTC'') securities, Nasdaq securities, on the floor of the Exchange, pursuant to unlisted trading privileges (''UTP'') under Section 12(f) of the Act.[8] To facilitate this process, the Exchange is proposing to add Chapter XXXV to the BSE Rules. The rules set forth in Chapter XXXV specifically govern the trading of Nasdaq securities, with references to various sections of other Exchange rules relating to the trading of equity securities, as well as references to selected NASD rules, where appropriate. Included within the Chapter are provisions for a two-year maturing Nasdaq stock allocation process, designed so as to provide meaningful allocation opportunities for firms that wish to become members of the Exchange and trade Nasdaq securities throughout the two-year maturation period. The following series of provisions appear in Chapter XXXV.

Section 1: defines various terminology used throughout the Chapter XXXV;

Section 2: discusses how orders for Nasdaq securities are to be transmitted to and from Exchange specialists. This section references other sections of the BSE Rules related to order display rules. Additionally, this section addresses the telephonic transmission of orders;

Section 3: references NASD Rule 4630, and sets forth the reporting requirements for Nasdaq securities transactions;

Sections 4 & 5: address automatic and manual execution of Nasdaq securities, and sets the minimum size parameter for automatic execution;

Section 6: discusses preopening orders and trading halts;

Section 7: discusses how cross transactions in Nasdaq securities are to be handled, with references to other BSE rules;

Section 8: designates the hours of business for the trading of Nasdaq securities on the floor of the Exchange, pursuant to Exchange rule;

Section 9: sets forth the parameters and conditions for guaranteed order acceptance and execution;

Section 10: pursuant to Exchange and NASD rules, designates various specialist responsibilities regarding orderly markets and best execution practices;

Section 11: in accordance with other Exchange rules, sets forth the registration requirements for Nasdaq specialists;

Section 12: discusses, in light of other Exchange Rules, limitations on specialists;

Section 13: discusses, in light of other Exchange Rules, limitations on floor clerks;

Section 14: addresses odd-lot orders and dealers, in reference to other similar Exchange rules;

Section 15: discusses the synchronization of business clocks, in concert with NASD Rule 6953;

Section 16: pursuant to Exchange rules, sets forth minimum capital and equity requirements for Nasdaq specialists;

Section 17: references existing BSE rules regarding margin procedures for all specialists;

Section 18: sets forth limitations on the number of Nasdaq securities held by a specialist, and the amount of time a specialist must hold and actively trade a Nasdaq security;

Sections 19 & 20: explain the application procedure for registration in Nasdaq securities;

Section 21: sets forth the Exchange's procedures regarding the allocation of Nasdaq securities. The procedures are designed to cover the initial two-year period of Nasdaq trading on the floor of the Exchange. At the conclusion of the two-year period, the Exchange intends to re-examine the process and adopt permanent Nasdaq stock allocation procedures;

Section 22: lists the criteria which the Stock Allocation Committee can consider during Nasdaq security allocation;

Sections 23 & 24: discuss the procedures to be followed in the event that a Nasdaq security experiences certain corporate actions, or changes its listing status;

Section 25: explains the limitations on the swapping of Nasdaq securities between specialists;

Section 26: sets forth requirements for a specialist regarding deregistering in a Nasdaq security;

Section 27: references another Exchange rule in explaining possible disciplinary action in relation to the trading of Nasdaq securities;

Section 28: sets forth the Exchange's Short Sale Rule regarding Nasdaq securities; and

Section 29: explains the Exchange's liability limitations regarding the trading system used for the trading of Nasdaq securities.

2. Basis

The Exchange believes that the basis for the proposed rule change is Section 6(b)(5)[9] of the Act, along with Sections 6(b)(8),[10] 11A,[11] and 12(f)[12] of the Act. Specifically, the Exchange believes that the proposed rule change is consistent with Section 6(b)(5)[13] of the Act because permitting BSE specialists to trade eligible Nasdaq securities will promote just and equitable principles of trade and facilitate transactions in securities, thereby removing impediments to and perfecting the mechanism of a free and open market in a manner consistent with the protection of investors and the public interest.

[8] 15 U.S.C. 78l(f).

[9] 15 U.S.C. 78f(b)(5).

[10] 15 U.S.C. 78f(b)(8).

[11] 15 U.S.C. 78k–1.

[12] 15 U.S.C. 78*l*(f).

[13] 15 U.S.C. 78f(b)(5).

B. Self-Regulatory Organization's Statement on Burden on Competition

The Exchange does not believe that the proposed rule change will impose any inappropriate burden on competition.

C. Self-Regulatory Organization's Statement on Comments on the Proposed Rule Change Received From Members, Participants, or Others

The Exchange has neither solicited nor received comments on the proposed rule change.

III. Date of Effectiveness of the Proposed Rule Change and Timing for Commission Action

Within 35 days of the date of publication of this notice in the **Federal Register** or within such longer period (i) as the Commission may designate up to 90 days of such date if it finds such longer period to be appropriate and publishes its reasons for so finding or (ii) as to which the self-regulatory organization consents, the Commission will:

(A) By order approve such proposed rule change, or

(B) Institute proceedings to determine whether the proposed rule change should be disapproved.

IV. Solicitation of Comments

Interested persons are invited to submit written data, views and arguments concerning the foregoing, including whether the proposed rule change is consistent with the Act. Persons making written submissions should file six copies thereof with the Secretary, Securities and Exchange Commission, 450 Fifth Street, NW., Washington, DC 20549–0609. Copies of the submission, all subsequent amendments, all written statements with respect to the proposed rule change that are filed with the Commission, and all written communications relating to the proposed rule change between the Commission and any person, other than those that may be withheld from the public in accordance with the provisions of 5 U.S.C. 552, will be available for inspection and copying at the Commission's Public Reference Room. Copies of such filing will also be available for inspection and copying at the principal office of the Exchange. All submissions should refer to File No. SR–BSE–2001–01 and should be submitted by July 24, 2001.

For the Commission, by the Division of Market Regulation, pursuant to delegated authority [14].

Margaret H. McFarland,

Deputy Secretary.

[FR Doc. 01–16672 Filed 7–2–01; 8:45 am]

BILLING CODE 8010–01–M

[14] 17 CFR 200.30–3(a)(12).

SECURITIES AND EXCHANGE COMMISSION

[Release No. 34–44469; File No. SR–CBOE–2001–25]

Self-Regulatory Organizations; Notice of Filing and Immediate Effectiveness of Proposed Rule Change and Amendment No. 1 Thereto by the Chicago Board Options Exchange, Inc. Relating to Marketing and Administrative Fees

June 22, 2001.

Pursuant to Section 19(b)(1) of the Securities Exchange Act of 1934 (Act) [1] and Rule 19b–4 thereunder,[2] notice is hereby given that on May 21, 2001, the Chicago Board Options Exchange, Inc. (CBOE) filed with the Securities and Exchange Commission the proposed rule change as described in Items I, II, and III below, which Items the CBOE has prepared. The CBOE submitted Amendment No. 1 to the proposed rule change on June 18, 2001. The Commission is publishing this notice to solicit comments from interested persons on the proposed rule change, as amended.

I. Self-Regulatory Organization's Statement of the Terms of Substance of the Proposed Rule Change

The CBOE proposes to pay interest on the funds collected through its marketing fee program, to obtain the authority to refund periodically the excess collected balances in the marketing fee accounts, and to assess an administrative fee, effective July 1, 2001, to cover the costs of implementing these steps and to offset the overall cost of administering the marketing fee program. The text of the proposed rule change is available at the principal offices of the CBOE and at the Commission.

II. Self-Regulatory Organization's Statement of the Purpose of, and Statutory Basis for, the Proposed Rule Change

In its filing with the Commission, the CBOE included statements concerning the purpose of and basis for the proposed rule change and discussed any comments it received on the proposed rule change. The text of these statements may be examined at the places specified in Item IV below. The CBOE has prepared summaries, set forth in sections A, B, and C below, of the most significant aspects of such statements.

A. Self-Regulatory Organization's Statement of the Purpose of, and Statutory Basis for, the Proposed Rule Change

In August 2000, the CBOE instituted a marketing fee program that imposed a $.40 per contract marketing fee on various options transactions executed on the CBOE. Under the plan, the proceeds from the fee were to be used by the appropriate Designated Primary Market Maker (''DPM'') for marketing its services and attracting order flow to the CBOE.[3] The funds have been placed in separate accounts for each DPM according to the class of options involved in each transaction in which the fee was imposed. The fees collected in a particular class of option are applied only to the marketing expenses applicable to that class of option.

At times, some accounts have taken in more money than the DPMs have chosen to spend for marketing. The CBOE wishes periodically to refund account balances of $50 or more to those who contributed the fees. Moreover, in collecting these fees over the last nine months, the CBOE has found that the proceeds from the fee are typically received into separate DPM accounts and kept there for at least several days before the DPM uses them. At the request of the association representing the CBOE's DPMs, the CBOE has determined to credit the accounts with interest earned from the collected funds. Finally, effective July 1, 2001, the CBOE intends to impose a monthly $10,000 administrative fee to fund the implementation of these steps and to offset the overall costs related to its marketing fee program.

The CBOE proposes periodically to refund proceeds collected through the marketing fee program that exceed a specific percentage of the amounts collected in the previous three months. The refunds would be made on a *pro rata* basis to the market makers that contributed the funds. Currently, the CBOE anticipates refunding account balances that exceed 15% of the amount collected in each account from February 1, 2001 through April 30, 2001. The CBOE also proposes to implement any

[1] 15 U.S.C. 78s(b)(1).

[2] 17 CFR 240.19b–4.

[3] Securities Exchange Act Release No. 43112 (August 3, 2000) 65 FR 49040 (August 10, 2000) (File No. SR–CBOE–2000–28).

future refunds in similar fashion, if and when the circumstances warrant. Recommendations as to the specific timing and amounts of any future refunds would be made by the CBOE's Financial Planning Committee, subject to approval by the Board of Directors.

In order to reduce the costs and administrative burdens placed upon the CBOE and the clearing firms in processing refunds, the CBOE would not issue refunds of less than $50. The CBOE believes that the cost of processing refunds of such small amounts would likely exceed the value of the refunds.

The CBOE also proposes to credit interest to the DPM accounts retroactively from the beginning of the marketing fee program, based on the average daily balance of each DPM account and the interest rate (currently about 5.5%) that the CBOE earns on its own excess cash.

In addition, effective July 1, 2001, the CBOE proposes to impose a monthly $10,000 administrative fee to cover its costs of administering the marketing fee program and the refund program. The monthly $10,000 administrative fee would be divided among the accounts of the various DPM stations trading equity options (currently numbering approximately 68). Under the proposal, each DPM would be assessed its *pro rata* share of the monthly $10,000 administrative fee, which would be offset against the amount of interest the CBOE will pay to each DPM account. The CBOE believes that this procedure will ensure that the fee is imposed on each DPM account fairly, based on each account's relative size.

The CBOE believes that the proposed rule change, as amended, is consistent with Section 6(b) of the Act [4] in general, and furthers the objectives of Section 6(b)(4) of the Act [5] in particular, in that it is designed to provide for the equitable allocation of reasonable dues, fees, and other changes among CBOE members.

B. Self-Regulatory Organization's Statement on Burden on Competition

The CBOE does not believe that the proposed rule change will impose any burden on competition not necessary or appropriate in furtherance of purposes of the Act.

C. Self-Regulatory Organization's Statement on Comments on the Proposed Rule Change Received From Members, Participants, or Others

The CBOE neither solicited nor received written comments with respect to the proposed rule change.

III. Date of Effectiveness of the Proposed Rule Change and Timing for Commission Action

Because the foregoing proposed rule change establishes or changes a due, fee, or other charge imposed by the CBOE, it has become effective pursuant to Section 19(b)(3)(A) of the Act [6] and Rule 19b–4(f)(2) thereunder.[7] At any time within 60 days of the filing of the proposed rule change, the Commission may summarily abrogate the rule change if it appears to the Commission that such action is necessary or appropriate in the public interest, for the protection of investors, or otherwise in furtherance of the purposes of the Act.

IV. Solicitation of Comments

Interested persons are invited to submit written data, views, and arguments concerning the foregoing, including whether the proposed rule change is consistent with the Act. Persons making written submissions should fix six copies thereof with the Secretary, Securities and Exchange Commission, 450 Fifth Street, NW., Washington, DC 20549–0609. Copies of the submission, all subsequent amendments, all written statements with respect to the proposed rule change that are filed with the Commission, and all written communications relating to the proposed rule change between the Commission and any person, other than those that may be withheld from the public in accordance with the provisions of 5 U.S.C. 552, will be available for inspection and copying in the Commission's Public Reference Room. Copies of the filing will also be available for inspection and copying at the principal office of the CBOE. All submissions should refer to the file number SR–CBOE–2001–25 and should be submitted by July 24, 2001.

For the Commission, by the Division of Market Regulation, pursuant to delegated authority.[8]

Margaret H. McFarland,

Deputy Secretary.

[FR Doc. 01–16636 Filed 7–2–01; 8:45 am]

BILLING CODE 8010–01–M

[4] 15 U.S.C. 78f(b).

[5] 15 U.S.C. 78f(b)(4).

[6] 15 U.S.C. 78s(b)(3)(A).

[7] 17 CFR 240.19b–4(f)(2).

[8] 17 CFR 200.30–3(a)(12).

SECURITIES AND EXCHANGE COMMISSION

[Release No. 34–44478; File No. SR–CBOE–2001–10]

Self-Regulatory Organizations; Order Approving a Proposed Rule Change and Notice of Filing and Order Granting Accelerated Approval of Amendment No. 1 Thereto by the Chicago Board Options Exchange, Incorporated Adopting Formal Procedures for Members To Submit Proposals To List Option Classes on the Exchange

June 27, 2001.

I. Introduction

On March 13, 2001, the Chicago Board Options Exchange, Inc. (''CBOE'' or the ''Exchange'') filed with the Securities and Exchange Commission (''Commission''), pursuant to section 19(b)(1) of the Securities Exchange Act of 1934 (''Act''),[1] and Rule 19b–4 thereunder,[2] a proposed rule change adopting formal procedures for members to submit proposals to list option classes on the Exchange. The **Federal Register** published the proposed rule change for comment on April 17, 2001.[3] The Commission received no comments on the proposal. The Exchange filed Amendment No. 1 to the proposed rule change on May 25, 2001.[4] This order approves the proposed rule change and grants accelerated approval to Amendment No. 1. The Commission also is soliciting comment on Amendment No. 1 to the proposed rule change.

II. Description of Proposal

The proposed rule change would adopt formal procedures for members to submit proposals to list option classes on the Exchange, and would codify the factors considered by the Exchange in listing option classes.[5] The proposed

[1] 15 U.S.C. 78s(b)(1).

[2] 17 CFR 240.19b–4.

[3] Securities Exchange Act Release No. 44173 (April 10, 2001), 66 FR 19819.

[4] *See* letter from Angelo Evangelou, Legal Division, CBOE, to Sonia Patton, Attorney, Division of Market Regulation, Commission, dated May 24, 2001 (''Amendment No. 1''). Amendment No. 1 revises Interpretation and Policy .07 to CBOE Rule 5.3 to clarify that when the Exchange relies upon other bona fide business considerations in denying or placing conditions or limitations upon a member listing proposal, the Exchange must provide the member with a written response specifying that the Exchange has relied upon other bona fide business considerations, in addition to maintaining a record of the bona fide business considerations supporting its decision.

[5] As part of a settlement of an enforcement action by the Commission, four of the options exchanges, including the CBOE, are required to adopt rules to codify listing procedures to be carried out when a

rule would permit a member to submit a written request that the Exchange list a particular option class, specifying the reasons why the member believes the Exchange should list the option class. The Stock Selection Committee would be required to make a decision regarding the request within 35 days of its receipt and to provide the member that submitted the request with a written response setting forth the rationale for the decision within ten days of making the decision.

III. Discussion

The Commission finds that the proposed rule change is consistent with the requirements of the Act and the rules and regulations thereunder applicable to a national securities exchange.[6] Specifically, the Commission believes that the proposed rule change is consistent with the section 6(b)(5)[7] requirements that the rules of an exchange be designed to promote just and equitable principles of trade, to remove impediments to and perfect the mechanisms of a free and open market and a national market system, and, in general, to protect investors and the public interest.

The Commission believes that the proposed rule change will remove impediments to and perfect the mechanisms of a free and open market by providing formal procedures for members to request the listing of options on the Exchange. The proposal would require the Exchange to respond in writing within 45 days to requests by members to list options. The Commission believes that the proposed procedures and time frames set forth in the proposed rule change are reasonable and adequately balance the Exchange's need to thoroughly examine proposed listings before making its determination with its members' need for a prompt and specific response to its listing recommendation.

In addition, the proposed rule change codifies the factors to be considered by the Exchange in determining whether to list a recommended option. The Commission believes that the proposed factors represent legitimate issues that the Exchange may consider when making a listing decision. The Commission notes that if the Exchange denies or places conditions or limitations upon a proposed listing, it must include its reasons in the letter notifying the member of its decision. The Commission believes that this requirement should help to ensure that the Exchange relies only upon the factors codified in its rules when making a listing decision.

The Commission finds good cause for accelerating approval of Amendment No. 1 to the proposed rule change prior to the thirtieth day after publication in the **Federal Register**. The Commission notes that Amendment No. 1 provides useful clarification to the proposed rules. Accordingly, the Commission finds that good cause exists, consistent with sections 6(b)(5)[8] and 19(b) of the Act,[9] to accelerate approval of Amendment No. 1 to the proposed rule change.

IV. Solicitation of Comments

Interested persons are invited to submit written data, views and arguments concerning Amendment No. 1, including whether the amendment is consistent with the Act. Persons making written submissions should file six copies thereof with the Secretary, Securities and Exchange Commission, 450 Fifth Street, NW., Washington, DC 20549–0609. Copies of the submission, all subsequent amendments, all written statements with respect to the proposed rule change that are filed with the Commission, and all written communications relating to the proposed rule change between the Commission and any person, other than those that may be withheld from the public in accordance with the provisions of 5 U.S.C. 552, will be available for inspection and copying at the Commission's Public Reference Room. Copies of such filing will also be available for inspection and copying at the principal office of the CBOE. All submissions should refer to the File No. SR–CBOE–2001–10 and should be submitted by July 24, 2001.

V. Conclusion

It is therefore ordered, pursuant to section 19(b)(2) of the Act,[10] that the proposed rule change (SR–CBOE–2001–10), as amended, is approved.

For the Commission, by the Division of Market Regulation, pursuant to delegated authority.[11]

Margaret H. McFarland,

Deputy Secretary.

[FR Doc. 01–16675 Filed 7–2–01; 8:45 am]

BILLING CODE 8010–01–M

member or member organization requests the exchange to list options not currently trading on the exchange. *See* Order Instituting Public Administrative Proceedings Pursuant to section 19(h)(1) of the Securities Exchange Act of 1934, Making Findings and Imposing Remedial Sanctions (''Settlement Order''). Securities Exchange Act Release No. 43268 (September 11, 2000).

[6] In approving the proposal, the Commission has considered its impact on efficiency, competition, and capital formation. 15 U.S.C. 78c(f).

[7] 15 U.S.C. 78f(b)(5).

[8] 15 U.S.C. 78f(b)(5).

[9] 15 U.S.C. 78s(b).

[10] 15 U.S.C. 78s(b)(2).

[11] 17 CFR 200.30–3(a)(12).

SECURITIES AND EXCHANGE COMMISSION

[Release No. 34–44481; File No. SR–NYSE–2001–02]

Self-Regulatory Organizations; Notice of Filing and Order Granting Accelerated Approval of Proposed Rule Change and Amendment No. 1 Thereto by the New York Stock Exchange, Inc. Relating to the NYSE's Financial Standards for Listing and the Procedures Applied by the Exchange to Companies Below the Exchange's Continued Listing Criteria

June 27, 2001.

Pursuant to Section 19(b)(1) of the Securities Exchange Act of 1934 (''Act''),[1] and Rule 19b–4 thereunder,[2] notice is hereby given that on January 26, 2001, the New York Stock Exchange, Inc. (''NYSE'' or ''Exchange'') filed with the Securities and Exchange Commission (''SEC'' or ''Commission'') the proposed rule change as described in Items I and II below, which Items have been prepared by the Exchange. On April 25, 2001, the Exchange submitted Amendment No. 1 to the proposed rule change.[3] The Commission is publishing this notice to solicit comments on the proposed rule change, as amended, from interested persons. For the reasons discussed below, the Commission is granting accelerated approval of the proposed rule change, as amended.

I. Self-Regulatory Organization's Statement of the Terms of Substance of the Proposed Rule Change

The proposed rule change consists of amendments to Sections 102, 103, and 802 of the Exchange's *Listed Company Manual* (''*Manual*'') and Exchange Rule 499. The proposed amendments to Sections 102 and 103 of the *Manual* implement a modification to generally accepted accounting principles (GAAP), while proposed amendments to Section

[1] 15 U.S.C. 78s(b)(1).

[2] 17 CFR 240.19b–4.

[3] *See* Letter from James E. Buck, Senior Vice President & Secretary, NYSE, to Nancy J. Sanow, Assistant Director, Division of Market Regulation (''Division''), Commission (April 24, 2001). Amendment No. 1 replaces the proposed rule change in its entirety.

802 consist of technical changes in how certain requirements are applied, and provide some alternative measures by which a company operating under a plan to bring itself into conformity with continued listing standards within 18 months of falling below the Exchange's continued listing criteria (''Plan'')[4] may be deemed to have returned to compliance. The proposed amendments to NYSE Rule 499 reflect the proposed amendments to Section 802 of the *Manual.*

The text of the proposed rule change, as amended, is as follows. New text is italicized and deleted text is bracketed.

* * * * *

102.00 Domestic Companies

102.01 Minimum Numerical Standards—Domestic Companies—Equity Listings

* * * * *

102.01C. A company must meet one of the following financial standards.

(I)(1) Pre tax earnings from continuing operations and after minority interest*, amortization* and equity in the earnings or losses of investees as adjusted (E) for items specified in (2)(a) through (i) below (F) must total at least:

$2,500,000 in the latest fiscal year together with $2,000,000 in each of the preceding two years; or

$6,500,000 in the aggregate for the last three fiscal years together with a minimum of $4,500,000 in the most recent fiscal year, and positive amounts for each of the preceding two years.

* * * * *

103.00 Non-U.S. Companies

103.01 Minimum Numerical Standards Non-U.S. Companies Equity Listings Distribution

* * * * *

103.01B. A company must meet one of the following financial standards:

(I)(1) Pre tax earnings from continuing operations and after minority interest*, amortization* and equity in the earnings or losses of investees are adjusted (C)(D) for items specified in para. 102.01C (I)(2)(a) through (i) above, and 103.01(I)(2) below, must total at least:

$100,000,000 in the aggregate for the last three fiscal years together with a minimum of $25,000,000 in each of the most recent two years.

* * * * *

802.00 Continued Listing

802.01 Continued Listing Criteria

The Exchange would normally give consideration to delisting a security either a domestic or non-U.S. issuer when:

* * * * *

802.01B Numerical Criteria for Capital or Common Stock

If a company falls below any of the following criteria, it is subject to the procedures outlined in Paras. 802.02 and 802.03:

[•] *(i)* [Total] *Average* global market capitalization *over a consecutive 30 trading-day period* is less than $50,000,000 and total stockholders' equity [or, for partnerships, both the general and limited partners' capital as applicable,] is less than $50,000,000 (C); or

[•] *(ii)* Average global market capitalization over a consecutive 30 trading-day period is less than $15,000,000; or

[•] *(iii)* For companies that [qualify] *qualified for original listing* under the ''global market capitalization'' standard:

[Total] *Average* global market capitalization *over a consecutive 30 trading-day period* is less than $500,000,000 and total revenues are less than $20,000,000 over the last 12 months (unless the resultant entity qualifies as an original listing under one of the other original listing standards) [(C)] *(D)*; or

Average global market capitalization over a consecutive 30 trading-day period is less than $100,000,000.

When applying the market capitalization test in any of the *above* three standards, the Exchange will generally look to the total common stock outstanding (excluding treasury shares) as well as any common stock that would be issued upon conversion of another outstanding equity security. The Exchange deems these securities to be reflected in market value to such an extent that the security is a ''substantial equivalent'' of common stock. In this regard, the Exchange will only consider securities (1) publicly traded (or quoted), or (2) convertible into a publicly traded (or quoted) security. For partnerships, the Exchange will analyze the creation of the current capital structure to determine whether it is appropriate to include other publicly traded securities in the calculation.

Affiliated Companies—Will not be subject to the $50*,000,000* [million] *average global* market capitalization and stockholders' equity test unless the parent/affiliated company no longer controls the entity or such parent/affiliated company itself falls below the continued listing standards *described* in this section.

Funds*, REITS and Limited Partnerships*—will be subject to immediate suspension and delisting procedures if (1) the *average* market capitalization over 30 consecutive trading days is below $15,000,000 or (2) [the Fund] *in the case of a Fund, it* ceases to maintain its closed-end status*, and in the case of a REIT, it fails to maintain its REIT status (unless the resultant entity qualifies for an original listing as a corporation.)* The Exchange will notify the fund*, REIT or limited partnership* if the average market capitalization falls below $25,000,000 and advise the [f]*F*und*, REIT or limited partnership* of the delisting standard. Funds*, REITs and limited partnerships* are not subject to the procedures outlined in Paras. 802.02 and 802.03.

[REITs—Until a REIT has operated for three years, it shall be held to a continued listing standard of $30,000,000 in both total market capitalization and stockholders' equity. Regardless of the length of time a REIT has been operating at the time of its initial listing, once it has operated for three years, it shall be held to the financial criteria outlined at the beginning of this Para.802.01B. At all times, all REITs must (1) maintain their REIT status (unless the resultant entity qualifies as an original listing as a corporation), and (2) maintain a minimum market capitalization of $15,000,000.]

* * * * *

(C) *To be considered in conformity with continued listing standards pursuant to Paras. 802.02 and 802.03, a company that is determined to be below this continued listing criterion must do one of the following:*

(i) Reestablish both its market capitalization and its stockholders' equity to the $50,000,000 level, or

(ii) Achieve average global market capitalization over a consecutive 30 trading-day period of at least $100,000,000, or

(iii) Achieve average global market capitalization over a consecutive 30 trading-day period of $60,000,000, with either (x) stockholders' equity of at least $40,000,000, or (y) an increase in stockholders' equity of at least $40,000,000 since the company was notified by the Exchange that it was below continued listing standards.

(D) A company that is determined to be below this continued listing criterion must reestablish both its market capitalization and its [stockholders' equity or] revenues[, as applicable,] to be considered in conformity with continued listing standards pursuant to Paras. 802.02 and 802.03.

[4] Section 802.02 of the *Manual.*

802.01C Price Criteria

Average closing price of a security is less than $1.00 over a consecutive 30 trading-day period ([D]*E*)

([D]*E*) Once notified, the company must bring its *share price and* average share price back above $1.00 by [the later of its subsequent annual meeting date or] six months following receipt of the notification. If this is the only criteria that makes the company below the Exchange's continued listing standards, the procedures outlined in Paras. 802.02 and 802.03 do not apply. The company must, however, notify the Exchange, within 10 business days of receipt of the notification, of its intent to cure this deficiency or be subject to suspension and delisting procedures. In the event that at the expiration of the six-month cure period, *both a $1.00 share price and* a $1.00 average share price over the preceding 30 trading days [is] *are* not attained, the Exchange will commence suspension and delisting procedures. *Notwithstanding the foregoing, if a company determines that, if necessary, it will cure the price condition by taking an action that will require approval of its shareholders, it must so inform the Exchange in the above referenced notification, must obtain the shareholder approval by no later than its next annual meeting, and must implement the action promptly thereafter. The price condition will be deemed cured if the price promptly exceeds $1.00 per share, and the price remains above that level for at least the following 30 trading days.*

Nowithstanding the foregoing, if the subject security is not the primary trading common stock of the company (e.g., a tracking stock or a preferred class) or is a stock listed under the Affiliated Company standard where the parent remains in ''control'' as that term is used in that standard, the Exchange may determine whether to apply the Price Criteria to such security after evaluating the financial status of the company and/or the parent/affiliated company, as the case may be.

* * * * *

802.02 Evaluation and Follow-up Procedures for Domestic Companies

The following procedures shall be applied by the Exchange to domestic companies which are identified as being below the Exchange's continued listing criteria. Notwithstanding the above, when the Exchange deems it necessary for the protection of investors, trading in any security can be suspended immediately, and application made to the SEC to delist the security.

Once the Exchange identifies, through internal reviews or notice (a press release, news story, company communication, etc.), a company as being below the continued listing criteria set forth in Para. 802.01 *(and not able to otherwise qualify under an original listing standard),* the Exchange will notify the company by letter of its status within 10 business days. This letter will also provide the company with an opportunity to provide the Exchange with a plan (the ''Plan'') advising the Exchange of definitive action the company has taken, or is taking, that would bring it into conformity with continued listing standards within 18 months of receipt of the letter. Within 10 business days after receipt of the letter, the company must contact the Exchange to confirm receipt of notification, discuss any possible financial data of which the Exchange may be unaware, and indicate whether or not it plans to present a Plan; otherwise, suspension and delisting procedures will commence. If the company submits a Plan, it must identify specific quarterly milestones against which the Exchange will evaluate the company's progress.

The company has 45 days from the receipt of the letter to submit its Plan to the Exchange for review; otherwise, suspension and delisting procedures will commence. *If the company is determined to be below the criteria listed in Section 802.01B(i) or 802.01B(iii), the Plan it presents must demonstrate how it will reestablish both its market capitalization and stockholders' equity (or revenues, as applicable), to the levels specified in such clauses. In any event, all companies submitting a Plan must include quarterly financial projections, details related to any strategic initiatives the company plans to complete, and market performance support.* Exchange staff will evaluate the Plan, including any additional documentation that supports the Plan, and make a determination as to [(1) whether the Plan shows the company meeting the continued listing standards within the 18 months and (2) whether the company has made a reasonable demonstration in the Plan of an ability to come into conformity with continued listing standards.] *whether the company has made a reasonable demonstration in the Plan of an ability to come into conformity with the relevant standard(s) within 18 months.* The Exchange will make such determination within 45 days of receipt of the proposed Plan, and will promptly notify the company of its determination in writing.

The company also has 45 days from receipt of the letter to issue a press release disclosing the fact that it has fallen below the continued listing standards of the Exchange. If the company fails to issue this press release during the allotted 45 days, the Exchange will issue the requisite press release.

If the Exchange does not accept the Plan, the Exchange will promptly initiate suspension and delisting procedures and issue a press release disclosing the forthcoming suspension and application to the SEC for delisting of the company's securities.

If the Exchange accepts the Plan, the Exchange will review the company on a quarterly basis for compliance with the Plan. If the company fails to meet the material aspects of the Plan or any of the quarterly milestones, the Exchange will review the circumstances and variance, and determine whether such variance warrants commencement of suspension and delisting procedures. Should the Exchange determine to proceed with suspension and delisting procedures, it may do so regardless of the company's continued listing status at that time. *The Exchange will deem the Plan period over prior to the end of the 18 months if a company is able to demonstrate returning to compliance with the applicable continued listing standards, or achieving the ability to qualify under an original listing standard, for a period of two consecutive quarters. This early Plan termination will not be available to a company based on satisfying the alternate criteria specified in clauses (ii) or (iii) of footnote C to Para. 802.01B.* In any event, if the company does not meet continued listing standards (*including the criteria specified in footnote C to Para. 802.01B, if applicable*) at the end of the 18-month period, the Exchange promptly will initiate suspension and delisting procedures.

If the company, [did meet continued listing standards at the end of the 18-month Plan period but] within twelve months of the end of the [18-month] *Plan* period (*including any early termination of the Plan period under the procedures described above),* [it] is again determined to be below continued listing standards, the Exchange will examine the relationship between the two incidents of falling below continued listing standards and re-evaluate the company's method of financial recovery from the first incident. It will then take appropriate action, which, depending upon the circumstances, may include truncating the procedures described above or immediately initiating suspension and delisting procedures.

802.03 Continued Listing

Evaluation and Follow-up Procedures for Non-U.S. Companies

The following procedures shall be applied by the Exchange to non-U.S. companies who are identified as being below the Exchange's continued listing criteria. Notwithstanding the above, when the Exchange deems it necessary for the protection of the investors, trading in any security can be suspended immediately, and application made to the SEC to delist the security.

Once the Exchange identifies, through internal reviews or notice (a press release, news story, company communication, etc.), a company as being below the continued listing criteria set forth in Para. 802.01 *(and not able to otherwise qualify under an original listing standard),* the Exchange will notify the company by letter of its status within 10 business days. This letter will also provide the company with an opportunity to provide the Exchange with a plan (the ''Plan'') advising the Exchange of definitive action the company has taken, or is taking, that would bring it into conformity with the standards within 18 months of receipt of the letter. Within 30 business days after receipt of the letter, the company must contact the Exchange to confirm receipt of notification, discuss any possible financial data of which the Exchange may be unaware, and indicate whether or not it plans to present a Plan; otherwise, suspension and delisting procedures will commence. If the company submits a Plan, it must identify specific semi-annual milestones against which the Exchange will evaluate the company's progress.

The company has 90 days from the receipt of the letter to submit its Plan to the Exchange for review; otherwise, suspension and delisting procedures will commence. *If the company is determined to be below the criteria listed in Section 802.01B(i) or 802.01B(iii), the Plan it presents must demonstrate how it will reestablish both its market capitalization and stockholders' equity (or revenues, as applicable), to the levels specified in such clauses. In any event, all companies submitting a Plan must include quarterly financial projections, details related to any strategic initiatives the company plans to complete, and market performance support.* Exchange staff will evaluate the Plan, including any additional documentation that supports the Plan, and make a determination as to [(1) whether the Plan shows the company meeting the continued listing standards within the 18 months and (2) whether the company has made a reasonable demonstration in the Plan of an ability to come into conformity with continued listing standards.] *whether the company has made a reasonable demonstration in the Plan of an ability to come into conformity with the relevant standard(s) within 18 months.* The Exchange will make such determination within 45 days of receipt of the proposed Plan, and will promptly notify the company of its determination in writing.

The company also has 90 days from receipt of the letter to issue *a* press release disclosing the fact that it has fallen below the continued listing standards of the Exchange. If the company fails to issue this press release during the allotted 90 days, the Exchange will issue the requisite press release.

If the Exchange does not accept the Plan, the Exchange will promptly initiate suspension and delisting procedures and issue a press disclosing the forthcoming suspension and application to the delisting of the company's securities.

If the Exchange accepts the Plan, the Exchange will review the company on a semi-annual basis for compliance with the Plan. If the company fails to meet the material aspects of the Plan or any of the semi-annual milestones, the Exchange will review the circumstances and variance, and determine whether such variance warrants commencement of suspension and delisting procedures. Should the Exchange determine to proceed with suspension and delisting procedures, it may do so regardless of the company's continued listing status at that time. *The Exchange will deem the Plan period over prior to the end of the 18 months if a company is able to demonstrate returning to compliance with the applicable continued listing standards, or achieving the ability to qualify under an original listing standard, for a period of two consecutive quarters. This early Plan termination will not be available to a company on satisfying the alternate criteria specified in clauses (ii) or (iii) of footnote C to Para. 802.01B.* In any event, if the company does not meet continued listing standards *(including the criteria specified in footnote C to Para. 802.01B, if applicable)* at the end of the 18-month period, the Exchange promptly will initiate suspension and delisting procedures.

If the company, [did meet continued listing standards at the end of the 18-month Plan period but] within twelve months of the end of the [18-month] *Plan* period *(including any early termination of the Plan period under the procedures above),* [it] is again determined to be below continued listing standards, the Exchange will examine the relationship between the two incidents of falling below continued listing standards and re-evaluate the company's method of financial recovery from the first incident. It will then take appropriate action, which, depending upon the circumstances, may include truncating the procedures described above or immediately initiating suspension and delisting procedures.

Delisting of Securities

Suspension from Dealings or removal from List by Action of the Exchange

* * * * *

Rule 499. Securities admitted to the list may be suspended from dealings or removed from the list at any time.

• • • ***Supplementary Material:***

* * * * *

.20 NUMERICAL AND OTHER CRITERIA.

* * * * *

The Exchange would normally give consideration to suspending or removing from the list a security of a company, whether it be a domestic or non-U.S. issuer, when:

* * * * *

4. [* Total] *Average* global market capitalization *over a consecutive 30 trading-day period* is less than $50,000,000, and total stockholders' equity [or, for partnerships, both the general and limited partners' capital as applicable,] is less than $50,000,000 **; or* [A company that is determined to be below this continued listing criteria must reestablish both its market capitalization and its stockholders' equity *(or net assets for Funds)* to be considered to conformity with continued listing standards pursuant to Sections .50 and .60]

** To be considered in conformity with continued listing standards pursuant to Paras .50 and .60 of this Rule 499, a company that is determined to be below this continued listing criterion must do one of the following:*

(i) Reestablish both its market capitalization and its stockholders' equity to the $50,000,000 level, or

(ii) Achieve average global market capitalization over a consecutive 30 trading-day period of at least $100,000,000, or

(iii) Achieve average global market capitalization over a consecutive 30 trading-day period of $60,000,000, with either (x) stockholders' equity of at least $40,000,000, or (y) an increase in stockholders' equity of at least

$40,000,000 since the company was notified by the Exchange that it was below continued listing standards.

5. [*] Average global market capitalization over a consecutive 30 trading-day period is less than $15,000,000[.]*; or*

6. [*] For companies that [qualify] *qualified for original listing* under the ''global market capitalization'' standard:

• [Total] *Average* global market capitalization *over a consecutive 30 trading-day period* is less than $500,000,000 and total revenues are less than $20,000,000 over the past 12 months (unless the resultant entity qualifies as an original listing under one of the other standards). ** [A company that is determined to be below this continued listing criteria must reestablish both its market capitalization and its revenues to be considered in conformity with continued listing standards pursuant to Sections .50 and .60]

OR

• Average global market capitalization over a consecutive 30 trading-day period is less than $100,000,000.

** * A company that is determined to be below this continued listing criteria must reestablish both its market capitalization and its revenues to be considered in conformity with continued listing standards pursuant to Paras. .50 and .60 of this Rule 499.*

[*] When applying the market capitalization test *in any of the three standards described in sections 4–6,* the Exchange will generally look to the total common stock outstanding (excluding treasury shares) as well as any common stock that would be issued upon conversion of another outstanding equity security. The Exchange deems these securities to be reflected in market value to such an extent that the security is a ''substantial equivalent'' of common stock. In this regard, the Exchange will only consider securities (1) publicly traded (or quoted), or (2) convertible into a publicly traded (or quoted) security. For partnerships, the Exchange will analyze the creation of the current capital structure to determine whether it is appropriate to include other publicly-traded securities in the calculation.

Affiliated companies will not be subject to the $50,000,000 average global market capitalization and stockholders' equity test unless the parent or affiliated company no longer controls the equity or such parent/affiliated company itself falls below the continued listing standards described herein.

7. Funds, *REITs and Limited Partnerships* will be subject to immediate suspension and delisting procedures if (1) the average market capitalization over 30 consecutive trading days is below $15,000,000 or (2) [the Fund] *in the case of a Fund,* it ceases to maintain its closed-end status, *and in the case of a REIT, it fails to maintain its REIT status (unless the resultant entity qualifies for an original listing as a corporation).* The Exchange will notify the [f]*F*und, *REIT or limited partnership* if the average market capitalization falls below $25,000,000 and advise the fund, *REIT of limited partnership* of the delisting standard. Funds, *REITs and limited partnerships* are not subject to the procedures outlined in [Paras. 802.02 and 802.03] *Paras. .50 and .60 of this Rule 499.*

[8. REITs—Until a REIT has operated for three years, it shall be held to a continued listing standard of $30,000,000 in both total market capitalization and stockholders' equity. Regardless of the length of time a REIT has been operating at the time of its initial listing, once it has operated for three years, it shall be held to the financial criteria outlined in sections 4–6 above. At all times, all REITs must (1) maintain their REIT status (unless the resultant entity qualifies as an original listing as a corporation), and (2) maintain a minimum market capitalization of $15,000,000.]

[9] *8.* Average closing price of a security is less than $1.00 over a consecutive 30 trading-day period. Once notified, the company must bring its *share price and* average share price back above $1.00 by [the later of its subsequent annual meeting date or] six months following receipt of the notification. If this is the only criteria that makes the company below the Exchange's continued listing standards, the procedures outlined in Paras. .50 and .60 of this Rule 499 do not apply. The company must, however, notify the Exchange, within 10 business days of receipt of the notification, of its intent to cure this deficiency. In the event that at the expiration of the cure period, *both a $1.00 share price and* a $1.00 average share price over the preceding 30 trading days [is] *are* not attained, the Exchange will commence suspension and delisting procedures. *Notwithstanding the foregoing, if a company determines that, if necessary, it will cure the price condition by taking an action that will require approval of its shareholders, it must so inform the Exchange in the above referenced notification, must obtain the shareholder approval by no later than its next annual meeting, and must implement the action promptly thereafter. The price condition will be deemed cured if the price promptly exceeds $1.00 per share, and the price remains above that level for at least the following 30 trading days.*

Notwithstanding the foregoing, if the subject security is not the primary trading common stock of the company (e.g., a tracking stock or a preferred class) or is a stock listed under the Affiliated Company standard where the parent remains in ''control'' as that term is used in that standard, the Exchange may determine whether to apply the Price Criteria to such security after evaluating the financial status of the company and/or the parent/affiliated company, as the case may be.

* * * * *

.50 Continued Listing Evaluation and Follow-up Procedures for Domestic Companies—

The following procedures shall be applied by the Exchange to domestic companies, which are identified as being below the Exchange's continued listing criteria. Notwithstanding the above, when the Exchange deems it necessary for the protection of investors, trading in any security can be suspended immediately, and application made to the SEC to delist the security.

Once the Exchange identifies, through internal reviews or notice (a press release, news story, company communication, etc.), a company as being below the continued listing criteria set forth in [¶ 802.01] *Par. .20 of this Rule 499 (and not able to otherwise qualify under an original listing standard*), the Exchange will notify the company by letter of its status within 10 business days. This letter will also provide the company with an opportunity to provide the Exchange with a plan (the ''Plan'') advising the Exchange of definitive action the company has taken, or is taking, that would bring it into conformity with continued listing standards within 18 months of receipt of the letter. Within 10 business days after receipt of the letter, the company must contact the Exchange to confirm receipt of notification, discuss any possible financial data of which the Exchange may be unaware, and indicate whether or not it plans to present a Plan; otherwise, suspension and delisting procedures will commence. If the company submits a Plan, it must identify specific quarterly milestones against which the Exchange will evaluate the company's progress.

The company has 45 days from the receipt of the letter to submit its Plan to the Exchange for review; otherwise, suspension and delisting procedures

will commence. *If the company is determined to be below the criteria listed in subparagraphs 4 or 6*[5] *of Para. .20 of this Rule 499, the Plan it presents must demonstrate how it will reestablish both its market capitalization and stockholders' equity (or revenues, as applicable), to the levels specified in such clauses. In any event, all companies submitting a Plan must include quarterly financial projections, details related to any strategic initiatives the company plans to complete, and market performance support.* Exchange staff will evaluate the Plan, including any additional documentation that supports the Plan, and make a determination as to [(1) whether the Plan shows the company meeting the continued listing standards within the 18 months and (2) whether the company has made a reasonable demonstration in the Plan of an ability to come into conformity with continued listing standards.] *whether the company has made a reasonable demonstration in the Plan of an ability to come into conformity with the relevant standard(s) within 18 months.* The Exchange will make such determination within 45 days of receipt of the proposed Plan, and will promptly notify the company of its determination in writing.

The company also has 45 days from receipt of the letter to issue a press release disclosing the fact that it has fallen below the continued listing standards of the Exchange. If the company fails to issue this press release during the allotted 45 days, the Exchange will issue the requisite press release.

If the Exchange does not accept the Plan, the Exchange will promptly initiate suspension and delisting procedures and issue a press release disclosing the forthcoming suspension and application to the SEC for delisting of the company's securities.

If the Exchange accepts the Plan, the Exchange will review the company on a quarterly basis for compliance with the Plan. If the company fails to meet the material aspects of the Plan or any of the quarterly milestones, the Exchange will review the circumstances and variance, and determine whether such variance warrants commencement of suspension and delisting procedures. Should the Exchange determine to proceed with suspension and delisting procedures, it may do so regardless of the company's continued listing status at that time. *The Exchange will deem the Plan period over prior to the end of the 18 months if a company is able to demonstrate returning to compliance with the applicable continued listing standards, or achieving the ability to qualify under an original listing standard, for a period of two consecutive quarters. This early Plan termination will not be available to a company based on satisfying the alternate criteria specified in clauses (ii) or (iii) of footnote * to subparagraph 4*[6] *of Para. .20 of this Rule 499.* In any event, if the company does not meet continued listing standards (*including the criteria specified in footnote * to subparagraph4*[7] *of Para. .20 of this Rule 499, if applicable*) at the end of the 18-month period, the Exchange promptly will initiate suspension and delisting procedures.

If the company, within twelve months of the end of the Plan period (including any early termination of the Plan period under the procedures described above), is again determined to be below continued listing standards, the Exchange will examine the relationship between the two incidents of falling below continued listing standards and re-evaluate the company's method of financial recovery from the first incident. It will then take appropriate action, which, depending upon the circumstances, may include truncating the procedures described above or immediately initiating suspension and delisting procedures.

.60 Continued Listing Evaluation and Follow-up Procedures for Non-U.S. Companies—

The following procedures shall be applied by the Exchange to non-U.S. companies who are identified as being below the Exchange's continued listing criteria. Notwithstanding the above, when the Exchange deems it necessary for the protection of the investors, trading in any security can be suspended immediately, and application made to the SEC to delist the security.

Once the Exchange identifies, through internal reviews or notice (a press release, news story, company communication, etc.), a company as being below the continued listing criteria set forth in [¶. 802.01] *Para. .20 of this Rule 499 (and not able to otherwise qualify under an original listing standard),* the Exchange will notify the company by letter of its status within 10 business days. This letter will also provide the company with an opportunity to provide the Exchange with a plan (the ''Plan'') advising the Exchange of definitive action the company has taken, or is taking, that would bring it into conformity with the standards within 18 months of receipt of the letter. Within 30 business days after receipt of the letter, the company must contact the Exchange to confirm receipt of notification, discuss any possible financial data of which the Exchange may be unaware, and indicate whether or not it plans to present a Plan; otherwise, suspension and delisting procedures will commence. If the company submits a Plan, it must identify specific semi-annual milestones which the Exchange will evaluate the company's progress.

The company has 90 days from the receipt of the letter to submit its Plan to the Exchange for review; otherwise, suspension and delisting procedures will commence. *If the company is determined to be below the criteria listed in subparagraphs 4 or 6*[8] *of Para. .20 of this Rule 499, the Plan it presents must demonstrate how it will reestablish both its market capitalization and stockholders' equity (or revenues, as applicable,) to the levels specified in such clauses. In any event, all companies submitting a Plan must include quarterly financial projections, details related to any strategic initiatives the company plans to complete, and market performance support.* Exchange staff will evaluate the Plan, including any additional documentation that supports the Plan, and make a determination as to [(1) whether the Plan shows the company meeting the continued listing standards within the 18 months and (2) whether the company has made a reasonable demonstration in the Plan of an ability to come into conformity with continued listing standards.] *whether the company has made a reasonable demonstration in the Plan of an ability to come into conformity with the relevant standard(s) within 18 months.* The Exchange will make such determination within 45 days of receipt of the proposed Plan, and will promptly notify the company of its determination in writing.

The company also has 90 days from receipt of the letter to issue *a* press release disclosing the fact that it has fallen below the continued listing standards of the Exchange. If the company fails to issue this press release during the allotted 90 days, the Exchange will issue the requisite press release.

If the Exchange does not accept the Plan, the Exchange will promptly

[5] The NYSE corrected a typographical error that appeared in the proposed rule language. Telephone conversation between James F. Duffy, Senior Vice President and Associate General Counsel, NYSE; Florence Harmon, Senior Special Counsel, Division of Market Regulation (''Division''), Commission; and Susie Cho, Special Counsel, Division, Commission, June 26, 2001.

[6] *Id.*

[7] *Id.*

[8] *Id.*

initiate suspension and delisting procedures and issue a press release disclosing the forthcoming suspension and application to the delisting of the company's securities.

If the Exchange accepts the Plan, the Exchange will review the company on a quarterly basis for compliance with the Plan. If the company fails to meet the material aspects of the Plan or any of the quarterly milestones, the Exchange will review the circumstances and variance, and determine whether such variance warrants commencement of suspension and delisting procedures. Should the Exchange determine to proceed with suspension and delisting procedures, it may do so regardless of the company's continued listing status at that time. *The Exchange will deem the Plan period over prior to the end of the 18 months if a company is able to demonstrate returning to compliance with the applicable continued listing standards, or achieving the ability to qualify under an original listing standard, for a period of two consecutive quarters. This early Plan termination will not be available to a company based on satisfying the alternate criteria specified in clauses (ii) or (iii) of footnote * to subparagraph 4 [9] of Para. .20 of this Rule 499.* In any event, if the company does not meet continued listing standards (*including the criteria specified in footnote * subparagraph 4 [10] of Para. .20 of this Rule 499, if applicable*) at the end of the 18-month period, the Exchange promptly will initiate suspension and delisting procedures.

If the company, within twelve months of the end of the Plan period (including any early termination of the Plan period under the procedures described above), is again determined to be below continued listing standards, the Exchange will examine the relationship between the two incidents of falling below continued listing standards and re-evaluate the company's method of financial recovery from the first incident. It will then take appropriate action, which, depending upon the circumstances, may include truncating the procedures described above or immediately initiating suspension and delisting procedures.

* * * * *

II. Self-Regulatory Organization's Statement of the Purpose of, and Stautory Basis for, the Proposed Rule Change

In its filing with the Commission, the Exchange included statements concerning the purpose of, and basis for, the proposed rule change and discussed any comments it received on the proposed rule change. The text of these statements may be examined at the places specified in Item III below. The Exchange has prepared summaries, set forth in Sections A, B, and C below, of the most significant aspects of such statements.

A. Self-Regulatory Organization's Statement of the Purpose of, and Statutory Basis for, the Proposed Rule Change

1. Purpose

The proposed rule change consists of amendments to Sections 102, 103, and 802 of the *Manual* and corresponding changes to Exchange Rule 499. Sections 102 and 103 of the *Manual* take into account a modification to generally accepted accounting principles (GAAP), while proposed amendments to Section 802 consist of technical changes in how certain requirements are applied, and provide some alternative measures by which companies operating under a Plan (as such term defined in Section 802.02 of the *Manual*) may be deemed to have returned to compliance with continued listing standards. The proposed amendments to Rule 499 reflect the proposed amendments to Section 802 of the *Manual*.

Amendments to Sections 102 and 103 of the Manual (Original Listing)

Sections 102 and 103 of the *Manual* set forth the criteria for original listing of, respectively, domestic and foreign issuers. In each case, one of the available criteria focuses on pre-tax earnings. Traditionally, GAAP required amortization expense to be reflected in the calculation of pre-tax earnings. Under a modification to GAAP, however, amortization expense may now be taken below the pre-tax earnings line on the income statement. Accordingly, the NYSE proposes to amend the existing criteria to specify that amortization expense should be deducted when computing pre-tax earnings for purposes of determining eligibility under the Exchange's earnings criteria.

Amendments to Section 802 (Continued Listing)

Last year, the Exchange implemented revisions to the continued listing standards and to the structure of the Plan process.[11] The Exchange believes that the changes have worked well. However, the Exchange represents that as it has gained additional experience, the need for adjustments or clarification became apparent. The proposed amendments to Section 802 are refinements that the Exchange believes will make the process more transparent and more effective.

Background

Section 802.01B establishes a ''conjunction test'' pursuant to which a company is considered below continued listing standards if both its market capitalization and its stockholders' equity fall below $50,000,000. Similar tests with different market capitalization requirements apply to companies listed on the basis of global market capitalization, and to real estate investment trusts (REITs). The *Manual* specifies that the Exchange requires a company to raise *both* measures back above the specified level to be considered again in compliance with continued listing standards. Section 802 of the *Manual* also specifies that a company is below standards if its market capitalization is below $15,000,000, without regard to stockholders' equity. Listed closed-end funds, as to which stockholders' equity is not relevant, are subject only to the latter standards.

Section 802.02 of the *Manual* specifies the process by which a listed company that is determined to be below standards may submit to the Exchange a plan (the ''Plan'') demonstrating how it will return to compliance with continued listing standards within 18 months. The Exchange monitors a company's performance under the Plan, and companies that cannot return to standards in 18 months are delisted. Section 802.03 of the *Manual* contains parallel provisions for non-U.S. companies.

Separately, Section 802.01C of the *Manual* provides that a company will be below listing criteria if its average closing share price over a consecutive 30 trading-day period is less than $1.00. Such a company is required to bring its 30 trading-day average closing price above $1.00 by the later of its next annual meeting date or six months after receipt of notification from the Exchange.

Proposed Changes

Financial Criteria. Section 802.01B specifies that the $15,000,000 market capitalization test is measured over a consecutive 30 trading-day period. In contrast, the market capitalization part of the ''conjunction test'' and the global market capitalization standard are measured at a point in time. The Exchange now believes that a market

[9] *Id.*

[10] *Id.*

[11] *See* Securities Exchange Act Release No. 43288 (September 13, 2000), 65 FR 56974 (September 20, 2000).

value snapshot is of limited utility, and that these criteria should be measured over 30 consecutive trading days. Separately, the Exchange believes that stockholders' equity is not a useful measure when applied to limited partnerships or REITs listed on the Exchange, and the Exchange proposes to apply to limited partnerships and REITs the same $15,000,000 market capitalization-only test that is applied to closed-end funds.

Financial Plan. The Exchange is proposing several modifications to the Plan process. The Exchange will continue to ask companies to demonstrate how they will reestablish both sides of the ''conjunction test'' within 18 months.

For companies that have fallen below the $50,000,000 market capitalization/stockholders' equity ''conjunction test,'' however, the Exchange has identified certain alternate recovery measures in Footnote C of Section 802.01B. A company that achieves any of the alternate recovery measures (''Footnote C Company'') would be considered in conformity with continued listing standards pursuant to Sections 802.02 and 802.03 of the *Manual.* In essence, the Exchange proposes that such a company be considered in compliance with standards even without restoring both market capitalization and stockholders' equity to above $50,000,000, if the company, by the end of the Plan period, either

(i) Reestablishes both its market capitalization and its stockholders' equity to the $50,000,000 level;

(ii) Achieves an average global market capitalization over a consecutive 30 trading-day period of $100,000,000; or

(iii) Achieves an average global market capitalization over a consecutive 30 trading-day period of $60,000,000, together with either a stockholders' equity of $40,000,000, or an increase in stockholders' equity of at least $40,000,000 since the company was notified by the Exchange that it was below standards.

The Exchange considers these appropriate alternative recovery measures to apply at the end of an 18-month financial Plan period, but it will still require a company to provide a financial Plan that addresses how the company will restore its market capitalization and equity to the $50,000,000 level. Companies that return to compliance by satisfying one of the Footnote C alternate criteria will be considered in conformity with continued listing standards pursuant to Sections 802.02 and 802.03 unless they fall below the continued listing criteria specified in Section 802.01B, *i.e.,* the $50,000,000 ''conjunction test'' or the minimal market capitalization test of $15,000,000.[12]

Some companies operating under a Plan are able to return to full compliance with continued listing standards (or are able to demonstrate an ability to meet original listing standards) well before the expiration of the 18-month Plan period. In such circumstances, the Exchange will deem the Plan period over, although it will wait to see that the reestablished standard is maintained for two quarters before doing so. This *early* Plan termination, however, will not be made available to a company that only achieves compliance by meeting the alternative criteria described in clauses (ii) and (iii) to Footnote C of Section 802.01B.

Finally, under the existing Plan process described in Sections 802.02 and 802.03 of the *Manual,* a company is in a sense ''on probation'' for 12 months after the end of a successfully-implemented Plan. Under the proposed rule change, the Exchange will measure those 12 months from the early termination date when that occurs.

Price Criteria. Section 802.01C currently provides that a company must cure a $1.00 price condition by bringing its 30 trading-day average share price above $1.00 within six months, or by the company's next annual meeting date, whichever is later. The Exchange, however, represents that it always intended that the company would not only restore its 30-day average share price, but also its closing price, to above $1.00 by the target date. The Exchange also represents that Section 802.01C's option of giving a company until its next annual meeting to bring its average share price back above $1.00 was intended to accommodate a company that intended to cure the price condition by taking an action requiring the approval of its stockholders; in this case, the company would then need at least some trading time following the approval of the reverse split to evidence the increase in the share price. The proposed rule change amends the Section so that the provisions read as originally intended by the Exchange.

Amendments to Rule 499

The proposed amendments to Exchange Rule 499 correspond with the proposed amendments to Section 802 of the *Manual.* Exchange Rule 499 also reflects certain previous amendments to Section 802 that were inadvertently omitted from the Rule.

2. Statutory Basis

The Exchange believes that the basis under the Act for this proposed rule change is the requirement under Section 6(b)(5) that an exchange have rules that are designed to prevent fraudulent and manipulative acts and practices, to promote just and equitable principles of trade, to remove impediments to, and perfect the mechanism of a free and open market and, in general, to protect investors and the public interest.

B. Self-Regulatory Organization's Statement on Burden on Competition

The Exchange does not believe that the proposed rule change will impose any burden on competition that is not necessary or appropriate in furtherance of the purposes of the Act.

C. Self-Regulatory Organization's Statement on Comments on the Proposed Rule Change Received From Members, Participants or Others

The Exchange has neither solicited nor received written comments on the proposed rule change.

III. Solicitation of Comments

Interested persons are invited to submit written data, views and arguments concerning the foregoing, including whether the proposed rule change, as amended, is consistent with the Act. Persons making written submissions should file six copies thereof with the Secretary, Securities and Exchange Commission, 450 Fifth Street NW, Washington, DC 20549–0609. Copies of the submission, all subsequent amendments, all written statements with respect to the proposed rule change that are filed with the Commission, and all written communications relating to the proposed rule change between the Commission and any person, other than those that may be withheld from the public in accordance with the provisions of 5 U.S.C. 552, will be available for inspection and copying in the Commission's Public Reference Room. Copies of such filing will also be available for inspection and copying at the principal office of the NYSE. All submissions should refer to File No.SR–

[12] For example, if a Footnote C Company had returned to compliance by achieving a market capitalization of $60,000,000 and stockholders' equity of $40,000,000, that company would be considered in compliance with continued listing standards, unless both its market capitalization *and* total stockholders' equity were less than $50,000,000, or unless its minimal market capitalization was less than $15,000,000. Telephone conversation between James F. Duffy, Senior Vice President and Associate General Counsel, NYSE; Florence Harmon, Senior Special Counsel, Division, Commission; and Susie Cho, Special Counsel, Division, Commission, June 26, 2001.

NYSE–2001–02 and should be submitted by July 24, 2001.

IV. Commission's Findings and Order Granting Accelerated Approval of Proposed Rule Change

The Commission finds that the proposed rule change, as amended, is consistent with the requirements of the Act and the rules and regulations thereunder applicable to a national securities exchange.[13] Specifically, the Commission believes the proposal is consistent with Section 6(b)(5) of the Act,[14] which requires that the rules of an exchange be designed to promote just and equitable principles of trade, to remove impediments to and perfect the mechanisms of a free and open market and a national market system, and in general, to protect investors and the public.

The amendments to Sections 102 and 103 of the *Manual* reflect a modification to GAAP and will bring uniform accounting principles to the process of determining eligibility under the Exchange's earnings criteria for original listing of domestic and foreign issuers. Regarding the numerical criteria of Section 802.01B, the Commission believes that it is reasonable for the Exchange to apply the global market capitalization/total stockholders' equity standard over a consecutive 30 trading-day period, as is currently specified for the $15,000,000 market capitalization test. The Commission also believes that it is reasonable for the Exchange to apply to limited partnerships and REITs the same $15,000,000 market capitalization-only test that is applied to closed-end funds, since in its experience implementing the criteria, the Exchange has observed that stockholders' equity is not a useful measure when applied to limited partnerships or REITs listed on the Exchange.

In addition, the Commission believes that the amendments to Section 802.01C regarding price criteria are a reasonable means of effectuating the Exchange's original intent. The Exchange had intended that a company with an average closing price less than $1.00 over a consecutive 30 trading-day period would not only restore its 30-day average share price, but also its closing price, to above $1.00 by the target date. The Exchange also represents that Section 802.01C's option of giving a company until its next annual meeting to bring its average share price back above $1.00 was intended to accommodate a company that intended to cure the price condition by taking an action requiring the approval of its stockholders; in this case, the company would then need at least some trading time following the approval of the reverse split to evidence the increase in the share price. The proposed rule change clarifies these points.

The Commission also believes that the modifications to the Plan process under Sections 802.02 and 802.03 strike a permissible balance between the Exchange's obligation to protect investors and their confidence in the market, with its parallel obligation to perfect the mechanism of a free and open market. The alternate recovery measures by which a company may return to compliance with continued listing standards are explicitly delineated, providing greater transparency to the Plan process and sustaining investor confidence in the integrity of the markets.

The Commission, however, specifically notes that the Footnote C Companies fall under a unique category vis²-vis other companies regarding the application of the 18-month Plan process. For example, even with the alternative recovery measures in place, the Exchange will still require a company to provide a financial Plan that addresses how the company will restore both its market capitalization and stockholders' equity to the $50,000,000 level. In the instance where a company is eligible for early termination of its Plan, the NYSE has established a concrete time period during which the company must maintain its re-established continued listing standards before termination of the Plan. This early Plan termination, however, will not be made available to a company that only achieves the alternative criteria set forth in clauses (ii) and (iii) to Footnote C of Section 802.01B.

Moreover, under the existing Plan process described in Sections 802.02 and 802.03 of the *Manual,* a company is in a sense ''on probation'' for 12 months after the end of a successfully-implemented Plan. In the order approving this probation period provision, the Commission stated that ''the [provision] would allow the Exchange to scrutinize a company's recovery tactics if the company emerges from being below continued listing standards but then falls below continued listing standards within 12 months. In such a case, the Exchange could truncate the evaluation and follow-up procedures for companies falling below maintenance standards. Furthermore, if a company meets any of the ''other'' delisting criteria, the proposal would permit the Exchange to require that the company immediately comply with the evaluation and follow-up procedures outlined in the *Listing Manual.* In enhancing its market, the NYSE has determined to remove stocks that repeatedly fall below continued listing standards. The Commission believes that to uphold the quality of its market, it is reasonable for the NYSE to implement a procedure that allows it to abridge the follow-up procedure after it has evaluated a company's situation.'' [15]

The one-year probation period was therefore intended as a monitoring period to ensure that companies stay above the continued listing criteria. The Commission stresses that Footnote C Companies should not view the one-year probation period as an extension of the 18-month Plan period and an opportunity to gain additional time to achieve compliance. Absent extraordinary circumstances, the Commission expects the Exchange to suspend and institute delisting proceedings for the security of any Footnote C Company that falls below the Footnote C criteria during the one-year probation period.

The NYSE has requested that the Commission find good cause for approving the proposed rule change, as amended, prior to the thirtieth day after the date of publication of notice in the **Federal Register**. The Commission believes that it is reasonable to grant accelerated approval to allow for the efficient administration of the Exchange's original and continued listing programs as promptly as possible. Accordingly, the Commission finds good cause, consistent with Sections 6(b)(5) and 19(b)(2) of the Act.[16]

It is therefore ordered, pursuant to Section 19(b)(2) of the Act,[17] that the proposed rule change, SR–NYSE–2001–02, as amended, is approved on an accelerated basis.

For the Commission, by the Division of Market Regulation, pursuant to delegated authority.[18]

Margaret H. McFarland,

Deputy Secretary.

[FR Doc. 01–16673 Filed 7–2–01; 8:45 am]

BILLING CODE 8010–01–M

[13] In approving this rule change, the Commission has considered the proposed rule's impact on efficiency, competition, and capital formation. 15 U.S.C. 78c(f).

[14] 15 U.S.C. 78f(b)(5).

[15] Securities Exchange Act Release No. 42194 (December 1, 1999), 64 FR 69311 (December 10, 1999).

[16] 15 U.S.C. 78f(b)(5) and 78s(b)(2).

[17] 15 U.S.C. 78s(b)(2).

[18] 17 CFR 200.30–3(a)(12).

SECURITIES AND EXCHANGE COMMISSION

[Release No. 34–44479; File No. SR–PCX–00–47]

Self-Regulatory Organizations; Order Approving a Proposed Rule Change by the Pacific Exchange, Inc. Adopting Formal Procedures for Members To Submit Proposals To List Option Classes on the Exchange

June 27, 2001.

I. Introduction

On December 13, 2000, the Pacific Exchange, Inc. (''PCX'' or ''Exchange'') submitted to the Securities and Exchange Commission (''Commission''), pursuant to section 19(b)(1) of the Securities Exchange Act of 1934 (''Act'')[1] and Rule 19b–4 thereunder,[2] a proposed rule change adopting formal procedures for members to submit proposals to list options classes on the Exchange. The PCX submitted Amendment Nos. 1[3] and 2[4] to the proposed rule change on February 13, 2001 and March 14, 2001, respectively. The **Federal Register** published the proposed rule change for comment on April 13, 2001.[5] The Commission received no comments on the proposed rule change. This order approves the proposed rule change, as amended.

II. Description of Proposal

The PCX proposes to adopt new PCX Rule 3.8 to provide procedures for member organizations to propose the listing of options on the Exchange.[6] The Exchange would provide a written response, setting forth the basis for the denial or placement of limitations or conditions, to the requesting member organization within ten business days of the date of the request. The proposed rule change also sets forth the qualitative and quantitative procedures that the Exchange's Options Listings Committee would follow in making a listing determination.

III. Discussion

The Commission finds that the proposed rule change is consistent with the requirements of the Act and the rules and regulations thereunder applicable to a national securities exchange.[7] Specifically, the Commission believes that the proposed rule change is consistent with the section 6(b)(5)[8] requirements that the rules of an exchange be designed to promote just and equitable principles of trade, to remove impediments to and perfect the mechanisms of a free and open market and a national market system, and, in general, to protect investors and the public interest.

The Commission believes that the proposed rule change will remove impediments to and perfect the mechanisms of a free and open market by providing formal procedures for members to request the listing of options on the Exchange. The proposal would require the Exchange to respond in writing within ten business days to requests by members to list options. The Commission believes that the proposed procedures and time frames set forth in the proposed rule change are reasonable and adequately balance the Exchange's need to thoroughly examine proposed listings before making its determination with its members' need for a prompt and specific response to its listing recommendation.

In addition, the proposed rule change codifies the factors to be considered by the Exchange in determining whether to list a recommended option. The Commission believes that the proposed factors represent legitimate issues that the Exchange may consider when making a listing decision. The Commission notes that if the Exchange denies or places conditions or limitations upon a proposed listing, it must include its reasons in the letter notifying the member of its decision. The Commission believes that this requirement should help to ensure that the Exchange relies only upon the factors codified in its rules when making a listing decision.

IV. Conclusion

It is therefore ordered, pursuant to section 19(b)(2) of the Act,[9] that the proposed rule change, as amended (SR–PCX–00–47), is approved.

For the Commission, by the Division of Market Regulation, pursuant to delegated authority.[10]

Margaret H. McFarland,

Deputy Secretary.

[FR Doc. 01–16677 Filed 7–2–01; 8:45 am]

BILLING CODE 8010–01–M

[1] 15 U.S.C. 78s(b)(1).

[2] 17 CFR 240.19b–4.

[3] On February 13, 2001, the PCX submitted a new Form 19b–4, which replaces and supersedes the original filing in its entirety (''Amendment No. 1'').

[4] *See* letter from Hassan Abedi, Attorney, Regulatory Policy, PCX, to Nancy J. Sanow, Assistant Director, Division of Market Regulation, Commission, dated March 13, 2001 (''Amendment No. 2''). Amendment No. 2 revises proposed PCX Rule 3.8(c) to require the Exchange to provide a written response within ten business days to the requesting member specifying that a denial or placement of limitations or conditions is due to other bona fide business considerations that are specifically documented and maintained in the minutes of the Exchange's Options Listings Committee.

[5] Securities Exchange Act Release No. 44149 (April 4, 2001), 66 FR 19273.

[6] As part of a settlement of an enforcement action by the Commission, four of the options exchanges, including the PCX, are required to adopt rules to codify listing procedures to be carried out when a member or member organization requests the exchange to list options not currently trading on the exchange. *See* Order Instituting Public Administrative Proceedings Pursuant to section 19(h)(1) of the Securities Exchange Act of 1934, Making Findings and Imposing Remedial Sanctions. Securities Exchange Act Release No. 43268 (September 11, 2000).

[7] In approving the proposal, the Commission has considered its impact on efficiency, competition, and capital formation. 15 U.S.C. 78c(f).

[8] 15 U.S.C. 78f(b)(5).

[9] 15 U.S.C. 78s(b)(2).

[10] 17 CFR 200.30–3(a)(12).

SECURITIES AND EXCHANGE COMMISSION

[Release No. 34–44480; File No. SR–Phlx–2001–02]

Self-Regulatory Organizations; Order Approving Proposed Rule Change by the Philadelphia Stock Exchange, Inc. Codifying Formal Procedures for Members To Submit Proposals To List Option Classes on the Exchange

June 27, 2001.

I. Introduction

On January 11, 2001, the Philadelphia Stock Exchange, Inc. (''Phlx'' or ''Exchange'') submitted to the Securities and Exchange Commission (''Commission'') pursuant to section 19(b)(1) of the Securities Exchange Act of 1934 (''Act''),[1] and Rule 19b–4 thereunder,[2] a proposed rule change codifying formal procedures for members to submit proposals to list option classes on the Exchange. The Phlx filed Amendment Nos. 1[3] and 2[4] to the proposed rule change on February

[1] 15 U.S.C. 78s(b)(1).

[2] 17 CRF 240.19b–4.

[3] *See* letter from Richard Rudolph, Counsel, Phlx, to Nancy Sanow, Assistant Director, Division of Market Regulation (''Division''), Commission, dated February 20, 2001 (''Amendment No. 1''). Among other things, Amendment No. 1 clarifies that the Exchange: (1) May consider bona fide business interests in determining whether to list an option; (ii) must send letters to members setting forth in reasonable detail the basis on which a decision not to list a proposed option was made; and (iii) must forward its written response within three business days of its determination to deny a proposed listing.

[4] *See* letter from Richard Rudolph, Counsel, Phlx, to Nancy Sanow, Assistant Director, Division, Commission, dated May 1, 2001 (''Amendment No. 2''). Amendment No. 2 clarifies that the Exchange must notify the member in writing if the Exchange determines not to list, or to place conditions or limitations upon, a proposed listing. Amendment No. 2 also clarifies that the Exchange must maintain a record of any bona fide business interests supporting a decision not to list, or to place conditions or limitations upon, a proposed listing.

21, 2001 and May 2, 2001, respectively. The **Federal Register** published the proposed rule change, as amended, for comment on May 15, 2001.[5] The Commission received no comments on the proposed rule change. This order approves the proposal, as amended.

II. Description of Proposal

The proposed rule change would establish procedures for Exchange members or member organizations to request the Exchange to list options not currently traded on the Exchange, and would codify the factors considered by the Exchange in listing option classes.[6] The Exchange would be required to review a proposed option's eligibility for listing within three business days of receiving a listing recommendation. If the Exchange determines that the proposed listing does not satisfy the Exchange's listing standards, the Exchange would be required to send a written response notifying the member within three days of the determination.

If the Exchange determines that the proposed option meets the Exchange's listing standards, Exchange staff would be required to present the proposal to the Chairman of the Board of Governors or his designee within ten business days of the determination. If the Exchange decides to deny or place limitations or conditions upon the proposed listing, the Exchange would be required to send a written response to the requesting member within three business days, setting forth in reasonable detail the basis on which the decision not to list, or to place limitations or conditions upon, the proposed option was made.

III. Discussion

The Commission finds that the proposed rule change is consistent with the requirements of the Act and the rules and regulations thereunder applicable to a national securities exchange.[7] Specifically, the Commission believes that the proposed rule change is consistent with the section 6(b)(5)[8] requirements that the rules of an exchange be designed to promote just and equitable principles of trade, to remove impediments to and perfect the mechanisms of a free and open market and a national market system, and, in general, to protect investors and the public interest.

The Commission believes that the proposed rule change will remove impediments to and perfect the mechanisms of a free and open market by providing formal procedures for members to request the listing of options on the Exchange. The proposal would require the Exchange to respond in writing within a maximum of sixteen business days to requests by member to list options. The Commission believes that the proposed procedures and time frames set forth in the proposed rule change are reasonable and adequately balance the Exchange's need to thoroughly examine proposed listings before making its determination with its members' need for a prompt and specific response to its listing recommendation.

In addition, the proposed rule change codifies the factors to be considered by the Exchange in determining whether to list a recommended option. The Commission believes that the proposed factors represent legitimate issues that the Exchange may consider when making a listing decision. The Commission notes that if the Exchange denies or places conditions or limitations upon a proposed listing, it must include its reasons in the letter notifying the member of its decision. The Commission believes that this requirement should help to ensure that the Exchange relies only upon the factors codified in its rules when making a listing decision.

IV. Conclusion

It is therefore ordered, pursuant to section 19(b)(2) of the Act,[9] that the proposed rule change, as amended, (SR–Phlx–2001–02) is approved.

For the Commission, by the Division of Market Regulation, pursuant to delegated authority.[10]

Margaret H. McFarland,

Deputy Secretary.

[FR Doc. 01–16674 Filed 7–2–01; 8:45 am]

BILLING CODE 8010–01–M

[5] Securities Exchange Act Release No. 44235 (May 9, 2001), 66 FR 26901

[6] As part of a settlement of an enforcement action by the Commission, four of the five options exchanges, including the Phlx, are required to adopt rules to codify listing procedures to be carried out when a member or member organization requests the exchange to list options not currently trading on the exchange. *See* Order Instituting Public Administrative Proceedings Pursuant to Section 19(h)(1) of the Securities Exchange Act of 1934, Making Findings and Imposing Remedial Sanctions. Securities Exchange Act Release No. 43268 (September 11, 2000).

[7] In approving the proposal, the Commission has considered its impact on efficiency, competition, and capital formation. 15 U.S.C. 78c(f).

[8] 15 U.S.C. 78f(b)(5).

[9] 15 U.S.C. 78s(b)(2).

[10] 17 CFR 200.30–3(a)(12).

UNITED STATES SENTENCING COMMISSION

Sentencing Guidelines for United States Courts

AGENCY: United States Sentencing Commission.

ACTION: Notice of proposed priorities; request for public comment.

SUMMARY: As part of its statutory authority and responsibility to analyze sentencing issues, including operation of the federal sentencing guidelines, and in accordance with Rule 5.2 of its Rules of Practice and Procedure, the Commission has identified certain tentative priorities that may be the focus of its policy development work during the amendment cycle ending May 1, 2002. The Commission envisions that much of this policy work may continue into the amendment cycle ending May 1, 2003. The Commission is seeking comment on these tentative priority issues.

DATES: Public comment should be received on or before August 3, 2001.

ADDRESSES: Send comments to: United States Sentencing Commission, One Columbus Circle, NE., Suite 2–500, South Lobby, Washington, DC 20002–8002, Attention: Public Affairs-Priorities Comment.

FOR FURTHER INFORMATION CONTACT: Michael Courlander, Public Affairs Officer, Telephone: (202) 502–4590.

SUPPLEMENTARY INFORMATION: The United States Sentencing Commission is an independent agency in the judicial branch of the United States Government. The Commission promulgates sentencing guidelines and policy statements for federal sentencing courts pursuant to 28 U.S.C. 994(a). The Commission also periodically reviews and revises previously promulgated guidelines pursuant to 28 U.S.C. 994(o) and submits guideline amendments to the Congress not later than the first day of May each year pursuant to 28 U.S.C. 994(p).

For the amendment cycle ending May 1, 2002, and possibly continuing into the amendment cycle ending May 1, 2003, the Commission has identified the following tentative priorities:

(1) In anticipation of the 15-year anniversary of the federal sentencing guidelines, the Commission has decided to undertake a 15–Year Study composed of a number of projects geared toward analyzing the guidelines in light of the goals of sentencing reform described in the Sentencing Reform Act and the statutory purposes of sentencing set forth in 18 U.S.C. 3553(a)(2).

(2) Possibly in conjunction with the 15-Year Study identified in paragraph (1), the Commission may begin an assessment of, and possibly consider guideline amendment proposals for, the following guideline areas: (A) Chapter Two, Part D (Offenses Involving Drugs); (B) Chapter Four (Criminal History); and (C) miscellaneous and discreet issues such as offenses involving damage to cultural heritage resources. As part of this work, the Commission may address any conflicts among the circuits related to the operation of the guidelines in these areas.

The Commission invites comment on these tentative priorities and on any other issues that interested persons believe the Commission should address during the amendment cycle ending May 1, 2002, including short- and long-term research issues. To the extent practicable, comments submitted on such issues should include the following: (1) A statement of the issue, including the scope and manner of study, particular problem areas and possible solutions, and any other matters relevant to a proposed priority; (2) citations to applicable sentencing guidelines, statutes, case law, and constitutional provisions; and (3) a direct and concise statement of why the Commission should make the issue a priority.

Authority: 28 U.S.C. 994(a), (o); USSC Rules of Practice and Procedure 5.2.

Diana E. Murphy,

Chair.

[FR Doc. 01–16714 Filed 7–2–01; 8:45 am]

BILLING CODE 2210–01–P

SMALL BUSINESS ADMINISTRATION

Data Collection Available for Public Comments and Recommendations

ACTION: Notice and request for comments.

SUMMARY: In accordance with the Paperwork Reduction Act of 1995, this notice announces the Small Business Administration's intentions to request approval on a new, and/or currently approved information collection.

DATES: Submit comments on or before September 4, 2001.

ADDRESSES: Send all comments regarding whether these information collections are necessary for the proper performance of the function of the agency, whether the burden estimates are accurate, and if there are ways to minimize the estimated burden and enhance the quality of the collections, to Sandra Johnston, Program Analyst, Office of Financial Assistance, Small Business Administration, 409 3rd Street, S.W., Suite 8300, Washington DC 20416.

FOR FURTHER INFORMATION CONTACT: Sandra Johnston, Program Analyst, (202) 205–7528 or Curtis B. Rich, Management Analyst, (202) 205–7030.

SUPPLEMENTARY INFORMATION:

Title: Personal Financial Statement.
Form No: 413.
Description of Respondents: Small Business Loan Applicants.
Annual Responses: 160,000.
Annual Burden: 240,000.

Title: U.S. Small Business Administration Application for Section 504 Loan.
Form No: 1244.
Description of Respondents: Small Businesses Applying for Financial Assistance.
Annual Responses: 5,200.
Annual Burden: 11,700.

Jacqueline White,

Chief, Administrative Information Branch.

[FR Doc. 01–16630 Filed 7–2–01; 8:45 am]

BILLING CODE 8025–01–P

SMALL BUSINESS ADMINISTRATION

[Declaration of Disaster #3351]

State of Kansas

Leavenworth County and the contiguous counties of Atchison, Douglas, Jefferson, Johnson and Wyandotte in the State of Kansas; and Platte County in the State of Missouri constitute a disaster area as a result of damages caused by severe thunderstorms and flash flooding that occurred on June 19, 2001. Applications for loans for physical damage may be filed until the close of business on August 27, 2001 and for economic injury until the close of business on March 26, 2002 at the address listed below or other locally announced locations: U.S. Small Business Administration, Disaster Area 3 Office, 4400 Amon Carter Blvd., Suite 102, Ft. Worth, TX 76155.

The interest rates are:

	Percent
For physical damage:	
Homeowners with credit available elsewhere	6.625
Homeowners without credit available elsewhere	3.312
Businesses with credit available elsewhere	8.000
Businesses and non-profit organizations without credit available elsewhere	4.000
Others (including non-profit organizations) with credit available elsewhere	7.125
For economic injury:	
Businesses and small agricultural cooperatives without credit available elsewhere	4.000

The number assigned to this disaster for physical damage is 335111 for Kansas and 335211 for Missouri. The number assigned to this disaster for economic injury is 9M0400 for Kansas and 9M0500 for Missouri.

(Catalog of Federal Domestic Assistance Program Nos. 59002 and 59008)

Dated: June 26, 2001.

John Whitmore,

Acting Administrator.

[FR Doc. 01–16631 Filed 7–2–01; 8:45 am]

BILLING CODE 8025–01–P

OFFICE OF THE UNITED STATES TRADE REPRESENTATIVE

Notice of Meeting of the Trade and Environment Policy Advisory Committee (TEPAC)

AGENCY: Office of the United States Trade Representative.

ACTION: Notice that the July 25, 2001, meeting of the Trade and Environment Policy Advisory Committee will be held from 9:30 a.m. to 12:30 p.m. The meeting will be closed to the public from 9:30 a.m. to 12 noon and open to the public from 12 noon to 12:30 p.m.

SUMMARY: The Trade and Environment Policy Advisory Committee will hold a meeting on July 25, 2001, from 9:30 a.m. to 12:30 p.m. The meeting will be closed to the public from 9:30 a.m. to 12 noon. The meeting will include a review and discussion of current issues which influence U.S. trade policy. Pursuant to Section 2155(f)(2) of Title 19 of the United States Code, I have determined that this meeting will be concerned with matters the disclosure of which would seriously compromise the development by the United States Government of trade policy, priorities, negotiating objectives or bargaining positions with respect to the operation of any trade agreement and other matters arising in connection with the development, implementation and administration of the trade policy of the United States. The meeting will be open to the public and press from 12 p.m. to 12:30 p.m., when trade policy issues will be discussed. Attendance during this part of the meeting is for observation only. Individuals who are not members of the

committee will not be invited to comment.

DATES: The meeting is scheduled for July 25, 2001, unless otherwise notified.

ADDRESSES: The meeting will be held at the USTR ANNEX Building in Conference Rooms 1 and 2, located at 1724 F Street, NW., Washington, DC, unless otherwise notified.

FOR FURTHER INFORMATION CONTACT: Heather K. Wingate, Office of the United States Trade Representative, (202) 395–6120.

Robert B. Zoellick,

United States Trade Representative.

[FR Doc. 01–16645 Filed 7–2–01; 8:45 am]

BILLING CODE 3190–01–M

OFFICE OF THE UNITED STATES TRADE REPRESENTATIVE

Notice of Meeting of the President's Advisory Committee on Trade Policy and Negotiations (ACTPN)

AGENCY: Office of the United States Trade Representative.

ACTION: Notice that the July 30, 2001, meeting of the President's Advisory Committee on Trade Policy and Negotiations will be held from 1:30 p.m. to 4:30 p.m. The meeting will be closed to the public from 1:30 p.m. to 4:00 p.m. and open to the public from 4:00 p.m. to 4:30 p.m.

SUMMARY: The President's Advisory Committee on Trade Policy and Negotiations will hold a meeting on July 30, 2001 from 1:30 p.m. to 4:30 p.m, The meeting will be closed to the public from 4:00 p.m. to 4:30 p.m. The meeting will include a review and discussion of current issues which influence U.S. trade policy. Pursuant to Section 2155(f)(2) of Title 19 of the United States Code, I have determined that this meeting will be concerned with matters the disclosure of which would seriously compromise the development by the United States Government of trade policy, priorities, negotiating objectives or bargaining positions with respect to the operation of any trade agreement and other matters arising in connection with the development, implementation and administration of the trade policy of the United States. The meeting will be open to the public and press from 4:00 p.m. to 4:30 p.m., when trade policy issues will be discussed. Attendance during this part of the meeting is for observation only. Individuals who are not members of the committee will not be invited to comment.

DATES: The meeting is scheduled for July 30, 2001, unless otherwise notified.

ADDRESSES: The meeting will be held at the USTR ANNEX Building in Conference Rooms 1 and 2, located at 1724 F Street, NW, Washington, DC, unless otherwise notified.

FOR FURTHER INFORMATION CONTACT: Heather Wingate, Office of the United States Trade Representative, (202) 395–6120.

Robert B. Zoellick,

United States Trade Representative.

[FR Doc. 01–16644 Filed 7–2–01; 8:45 am]

BILLING CODE 3190–01–M

DEPARTMENT OF TRANSPORTATION

Federal Aviation Administration

Agency Information Collection Activities Under OMB Review

AGENCY: Federal Aviation Administration (FAA), DOT.

ACTION: Notice.

SUMMARY: In compliance with the Paperwork Reduction Act of 1995 (44 U.S.C. 3501 et seq.), this notice announces that the Information Collection Requests (ICR) abstracted below have been forwarded to the Office of Management and Budget (OMB) for extension of the currently approved collections. The ICR describes the nature of the information collections and the expected burdens. The **Federal Register** notice with a 60-day comment period soliciting comments on the following collection of information was published on 4/26/01, pages 21037–21038.

DATES: Comments must be submitted on or before August 2, 2001. A comment to OMB is most effective if OMB receives it within 30 days of publication.

ADDRESSES: Send comments to the Office of Information and Regulatory Affairs, Office of Management and Budget, 725 17th Street, NW., Washington, DC 20503, Attention FAA Desk Officer.

Comments are invited on: Whether the proposed collection of information is necessary for the proper performance of the functions of the Department, including whether the information will have practical utility; the accuracy of the Department's estimates of the burden of the proposed information collection; ways to enhance the quality, utility and clarity of the information to be collected; and ways to minimize the burden of the collection of information on respondents, including the use of automated collection techniques or other forms of information technology.

FOR FURTHER INFORMATION CONTACT: Judy Street on (202) 267–9895.

SUPPLEMENTARY INFORMATION:

Federal Aviation Administration (FAA)

1. *Title:* Certification Procedures for Products and Parts, FAR 21.

Type of Request: Extension of a currently approved collection.

OMB Control Number: 2120–0018.

Form(s): FAA Forms 8110–12, 8130–1, 8130–6, 8130–9, 8130–12.

Affected Public: The respondents are an estimated 5100 aircraft part's designers, manufacturers, and aircraft owners.

Abstract: The information collected is used to determine compliance and applicant eligibility. FAA Airworthiness inspectors, designated inspectors, engineers, and designated engineers review the required data submittals to determine that the products and manufacturing facilities comply with the applicable requirements, and that the products have no unsafe features. Those products and facilities that comply with the minimum requirements are issued one or more appropriate certificates.

Estimated Annual Burden Hours: 44,101 hours annually.

2. *Title:* Air Taxi and Commercial Operator Activity Survey.

Type of Request: Extension of a currently approved collection.

OMB Control Number: 2120–0067.

Form(s): FAA Form 1800–31.

Affected Public: The respondents are an estimated 500 air taxi/commercial operators who are subject to the passenger transportation tax.

Abstract: The data collected is to serve as an input to the FAA revenue enplanement database which is used in allocating Airport Improvement Program (AIP) funds to airports.

Estimated Annual Burden Hours: 750 hours.

3. *Title:* Fuel Venting and Exhaust Emission Requirements for Turbine Engine Powered Airplanes.

Type of Request: Extension of a currently approved collection.

OMB Control Number: 2120–0508.

Form(s): None.

Affected Public: 6 engine manufacturers (estimated 1200 engines).

Abstract: This is a labeling requirement to put the date of manufacture and compliance status on the identification plate. The information is used by FAA inspectors, purchasers, owners and operators periodically, during the course of the year, to confirm that the engines meet U.S. EPA pollution requirements in lieu of searching through extensive paper records.

Estimated Annual Burden Hours: 100 hours.

4. *Title:* Airports Grants Program.

Type of Request: Extension of a currently approved collection.

OMB Control Number: 2120–0569.

Form(s): FAA Forms 5100–100, 5100–108, 5100–125, 5100–126, 5370–1.

Affected Public: 1,950 airport sponsors and planning agencies.

Abstract: The FAA collects information from airport sponsors and planning agencies in order to administer the Airports Grants Program. Data is used to determine eligibility, ensure proper use of Federal funds, and ensure project accomplishments.

Estimated Annual Burden Hours: 67,714 hours annually.

5. *Title:* Terrain Awareness and Warning System (TAWS).

Type of Request: Extension of a currently approved collection.

OMB Control Number: 2120–0631.

Form(s): None.

Affected Public: Device installed in all turbine-powered airplanes of 6 or more passengers seating.

Abstract: This is considered a passive information collection. The rule requires TAWS for all turbine-powered airplanes of 6 or more passenger seating. The TAWS is a passive, electronic, safety device located in the avionics bay of the airplane. TAWS alerts pilots when there is terrain in the airplane's flight path.

Estimated Annual Burden Hours: 1 hour.

Issued in Washington, DC, on June 27, 2001.

Steve Hopkins,

Manager, Standards and Information Division, APF–100.

[FR Doc. 01–16711 Filed 7–2–01; 8:45 am]

BILLING CODE 4910–13–M

DEPARTMENT OF TRANSPORTATION

Federal Aviation Administration

[Summary Notice No. PE–2001–48]

Petitions for Exemption Summary of Petitions Received

AGENCY: Federal Aviation Administration (FAA), DOT.

ACTION: Notice of petitions for exemption received.

SUMMARY: Pursuant to FAA's rulemaking provisions governing the application, processing, and disposition of petitions for exemption part 11 of Title 14, Code of Federal Regulations (14 CFR), this notice contains a summary of certain petitions seeking relief from specified requirements of 14 CFR. The purpose of this notice is to improve the public's awareness of, and participation in, this aspect of FAA's regulatory activities. Neither publication of this notice nor the inclusion or omission of information in the summary is intended to affect the legal status of any petition or its final disposition.

DATES: Comments on petitions received must identify the petition docket number involved and must be received on or before July 24, 2000.

ADDRESSES: Send comments on any petition to the Docket Management System, U.S. Department of Transportation, Room Plaza 401, 400 Seventh Street, SW., Washington, DC 20590–0001. You must identify the docket number FAA–2000–XXXX at the beginning of your comments. If you wish to receive confirmation that FAA received your comments, include a self-addressed, stamped postcard.

You may also submit comments through the Internet to http://dms.dot.gov. You may review the public docket containing the petition, any comments received, and any final disposition in person in the Dockets Office between 9:00 a.m. and 5:00 p.m., Monday through Friday, except Federal holidays. The Dockets Office (telephone 1–800–647–5527) is on the plaza level of the NASSIF Building at the Department of Transportation at the above address. Also, you may review public dockets on the Internet at http://dms.dot.gov.

FOR FURTHER INFORMATION CONTACT: Forest Rawls (202) 267–8033, Sandy Buchanan-Sumter (202) 267–7271, or Vanessa Wilkins (202) 267–8029, Office of Rulemaking (ARM–1), Federal Aviation Administration, 800 Independence Avenue, SW., Washington, DC 20591.

This notice is published pursuant to 14 CFR §§ 11.91.

Issued in Washington, DC, on June 28, 2001.

Donald P. Byrne,

Assistant Chief Counsel for Regulations.

Petitions for Exemption

Docket No.: FAA–2001–9490 (previously Docket No. 28672).

Petitioner: Alaska Airlines, Inc.

Section of 14 CFR Affected: 14 CFR § 121.709(b)(3).

Description of Relief Sought: To amend Exemption No. 6603, as amended, which permits Alaska Airlines' flight crewmembers who hold current pilot certificates to install and/or remove medevac stretchers in Alaska Airlines aircraft, by allowing Alaska Airlines' certificated flightcrew members to supervise and/or verify the installation and removal of medevac stretchers performed by Alaska Airlines' non-certificated flightcrew members.

Docket No.: FAA–2001–9780.

Petitioner: Schwartz Engineering Company.

Section of 14 CFR Affected: 14 CFR § 25.813(e).

Description of Relief Sought: To allow Schwartz to install a interior ''hinged'' door between passenger compartments on a Boeing Model 737–700IGW airplane, to be used in a private, not for hire, operation.

[FR Doc. 01–16712 Filed 7–2–01; 8:45 am]

BILLING CODE 4910–13–M

DEPARTMENT OF TRANSPORTATION

Federal Aviation Administration

[Summary Notice No. PE–2001–49]

Petitions for Exemption; Summary of Dispositions of Petitions Issued

AGENCY: Federal Aviation Administration (FAA), DOT.

ACTION: Notice of Dispositions of prior petitions.

SUMMARY: Pursuant to FAA's rulemaking provisions governing the application, processing, and disposition of petitions for exemption part 11 of Title 14, Code of Federal Regulations (14 CFR), this notice contains a summary of dispositions of certain petitions previously received. The purpose of this notice is to improve the public's awareness of, and participation in, this aspect of FAA's regulatory activities. Neither publication of this notice nor the inclusion or omission of information in the summary is intended to affect the legal status of any petition or its final disposition.

FOR FURTHER INFORMATION CONTACT: Forest Rawls (202) 267–8033, Sandy Buchanan-Sumter (202) 267–7271, or Vanessa Wilkins (202) 267–8029, Office of Rulemaking (ARM–1), Federal Aviation Administration, 800 Independence Avenue, SW., Washington, DC 20591.

This notice is published pursuant to 14 CFR §§ 11.85 and 11.91.

Issued in Washington, D.C., on June 28, 2001.

Donald P. Byrne,

Assistant Chief Counsel for Regulations.

Dispositions of Petitions

Docket No.: FAA–2001–9134.

Petitioner: Aviation Services, Ltd. dba Freedom Air.

Section of 14 CFR Affected: 14 CFR § 121.314(c).

Description of Relief Sought/ Disposition: To permit Freedom Air's one Model SD3–30 airplane to operate through April 15, 2002, or through the 30th day after delivery to Freedom Air of the aircraft modification kit by the aircraft manufacturer, whichever is sooner.

Partial Grant, 06/18/2001, Exemption No. 7466.

Docket No.: FAA–2001–8933.

Petitioner: Pacific Island Aviation, Inc.

Section of 14 CFR Affected: 14 CFR §§ 25.857(c).

Description of Relief Sought/ Disposition: To permit PIVA's three Model SD3–60 airplanes to operate through April 15, 2002, or through the 30th day after delivery to PIVA of the aircraft modification kits by the aircraft manufacturer, whichever is sooner.

Grant, 06/18/2001, Exemption No. 7465A.

[FR Doc. 01–16713 Filed 7–2–01; 8:45 am]

BILLING CODE 4910–13–M

DEPARTMENT OF TRANSPORTATION

Research and Special Programs Administration

Office of Hazardous Materials Safety; Notice of Applications for Exemptions

AGENCY: Research and Special Programs Administration, DOT.

ACTION: List of Applicants for Exemptions.

SUMMARY: In accordance with the procedures governing the application for, and the processing of, exemptions from the Department of Transportation's Hazardous Materials Regulations (49 CFR part 107, subpart B), notice is hereby given that the Office of Hazardous Materials Safety has received the applications described herein. Each mode of transportation for which a particular exemption is requested is indicated by a number in the ''Nature of Application'' portion of the table below as follows: 1—Motor vehicle, 2—Rail freight, 3—Cargo vessel, 4—Cargo aircraft only, 5—Passenger-carrying aircraft.

DATES: Comments must be received on or before August 2, 2001.

ADDRESS COMMENTS TO: Records Center, Research and Special Programs Administration, U.S. Department of Transportation, Washington, DC 20590.

Comments should refer to the application number and be submitted in triplicate. If confirmation of receipt of comments is desired, include a self-addressed stamped postcard showing the exemption application number.

FOR FURTHER INFORMATION CONTACT: Copies of the applications (See Docket Number) are available for inspection at the New Docket Management Facility, PL–401, at the U.S. Department of Transportation, Nassif Building, 400 7th Street, SW., Washington, DC 20590 or at http://dms.dot.gov.

This notice of receipt of applications for new exemptions is published in accordance with part 107 of the Federal hazardous materials transportation law (49 U.S.C. 5117(b); 49 CFR 1.53(b)).

Issued in Washington, DC, on June 28, 2001.

Ryan Posten,

Exemptions Program Officer, Office of Hazardous Materials Exemptions and Approvals.

NEW EXEMPTIONS

Application No.	Docket No.	Applicant	Regulation(s) affected	Nature of exemption thereof
12714–N	RSPA–01–9834	Scientific Cylinder Corporation, Englewood, CO.	49 CFR 173.302(c)(2), (4) & (5), 173.34(c)(2), (e)(3), (e)(4).	To authorize the transportation in commerce of certain cylinders which have been alternatively ultrasonically retested for use in transporting Division 2.1, 2.2 and 2.3 materials. (Modes 1, 2, 3, 4.).
12715–N	RSPA–01–9926	Arkansas Eastman, Eastman Chemical Co., Batesville, AR.	49 CFR 172.203(a), 172.302(c), 174.67(i) & (j).	To authorize rail cars containing chlorine to remain standing while connected without the physical presence of an unloader. (Mode 2.).
12716–N	RSPA–01–9930	Air Liquide America Corporation, Houston, TX.	49 CFR 173.304(a)(2)	To authorize the transportation in commerce of chlorine in uninsulated DOT Specification 3AAX cylinders permanently mounted on a motor vehicle. (Mode 1.).
12718–N	RSPA–01–9921	Weldship Corporation, Bethlehem, PA.	49 CFR 172.301, 173.34(e), 173.34(e)(3), 173.34(e)(4), 173.34(e)(5), 173.34(e)(6), 173.34(e)(7), 173.34(e)(8).	To authorize the transportation in commerce of certain DOT–3AL seamless aluminum cylinders constructed of alloy 6061 that have been alternatively ultrasonically retested for use in transporting Division 2.1, 2.2, 2.3 materials. (Modes 1, 2, 3, 4.).
12719–N	RSPA–01–9931	Bechtel Jacobs Company LLC, Oak Ridge, TN.	49 CFR 173.211, 173.244	To authorize the transportation in commerce of bulk and non-bulk aluminum containers used in transporting sodium, Division 4.3. (Mode 1.).
12720–N	RSPA–01–9917	American Honda Motor Company, Torrance, CA.	49 CFR 176.76(a)(4)	To authorize the transportation in commerce of electrolyte batteries in specially designed packagings, overpacked in a motor vehicle not subject to the requirements of the HMR, without securing the overpack to the floor of the intermodal freight container or trailer. (Modes 1, 2, 3, 4.).
12724–N	RSPA–01–9888	E.I. DuPont de Nemours & Co., Inc., Wilmington, DE.	49 CFR 178.345–10(b)(3), 180.405(h).	To authorize the transportation in commerce of MC 312 cargo tanks equipped with pressure relief systems that do not withstand the dynamic pressure surges in excess of the design set pressure. (Mode 1.).

NEW EXEMPTIONS—Continued

Application No.	Docket No.	Applicant	Regulation(s) affected	Nature of exemption thereof
12726–N	RSPA–01–9884	Air Transport Association, Washington, DC.	49 CFR 173.304(a)(1), 173.305, 173.309, 173.34(e), 175.3.	To authorize the transportation in commerce of fire extinguishers to be shipped with an alternative proper shipping name as specified in several exemptions. (Modes 1, 2, 4, 5.).
12727–N	RSPA–01–9987	Tri-West Packaging, Corona, CA.	49 CFR 173.12(b)(2)(i)	To authorize the manufacture, marking and sale of certain UN 11HH2 intermediate bulk containers for use as the outer packaging for lab pack applications. (Mode 1.).
12728–N	RSPA–01–9889	Eagle-Picher Technologies, LLC, Joplin, MO.	49 CFR 173.3, 173.302(a), 173.34(d).	To authorize the transportation in commerce of certain non-DOT specification pressure vessels containing compressed hydrogen, which are a component part of a nickel-hydrogen battery. (Modes 1, 4.).
12729–N	RSPA–01–9883	Mallinckrodt/Tyco Healthcare, Indianapolis, IN.	49 CFR 178.57(d)(5), (e)(3), (e)(4).	To authorize the manufacture, marking, sale and use of non-DOT specification cylinders conforming in part with DOT Specification 4L used for crygenic materials, Division 2.2. (Mode 1.).

[FR Doc. 01–16662 Filed 7–2–01; 8:45 am]

BILLING CODE 4910–60–M

DEPARTMENT OF TRANSPORTATION

Research and Special Programs Administration

Office of Hazardous Materials Safety; Notice of Applications for Modifications of Exemption

AGENCY: Research and Special Programs Administration, DOT.

ACTION: List of Applications for Modification of Exemptions.

SUMMARY: In accordance with the procedures governing the application for, and the processing of, exemptions from the Department of Transportation's Hazardous Materials Regulations (49 CFR part 107, subpart B), notice is hereby given that the Office of Hazardous Materials Safety has received the applications described herein. This notice is abbreviated to expedite docketing and public notice. Because the sections affected, modes of transportations, and the nature of application have been shown in earlier **Federal Register** publications, they are not repeated here. Requests for modifications of exemptions (*e.g.,* to provide for additional hazardous materials, packaging design changes, additional mode of transportation, etc.) are described in footnotes to the mode of transportation, etc.) are described in footnotes to the application number. Application numbers with the suffix ''M'' denote a modification request. These applications have been separated from the new applications for exemptions to facilitate processing.

DATES: Comments must be received on or before July 18, 2001.

ADDRESSES COMMENTS TO: Records Center, Research and Special Programs Administration, U.S. Department of Transportation, Washington, DC 20590.

Comments should refer to the application number and be submitted in triplicate. If confirmation of receipt of comments is desired, include a self-addressed stamped postcard showing the exemption number.

FOR FURTHER INFORMATION: Copies of the applications are available for inspection in the Records Center, Nassif Building, 400 7th Street SW, Washington, DC or at *http://dms.dot.gov.*

This notice of receipt of applications for modification of exemptions is published in accordance with Part 107 of the Federal hazardous materials transportation law (49 U.S.C. 5117(b); 49 CFR 1.53(b)).

Issued in Washington, DC, on June 28, 2001.

Ryan Posten,

Exemption Program Officer, Office of Hazardous Materials Exemptions and Approvals.

Application No.	Docket No.	Applicant	Modification of exemption
4884–M		Matheson Tri-Gas, East Rutherford, NJ [1]	4884
8995–M		BASF Corporation, Mount Olive, NJ [2]	8995
9421–M		Taylor-Wharton (Harsco Corporation), Harrisburg, PA [3]	9421
9508–M		Callery Chemical Company, Pittsburgh, PA [4]	9508
10798–M		Lyondell Chemical Co/EQUISTAR Chemicals, LP, Houston, TX [5]	10798
11153–M		Pacific Northwest National Laboratory, Richland, WA [6]	11153
11786–M		Dow Corning Corporation, Midland, MI [7]	11786
12515–M		FIBA Technologies, Inc., Westboro, MA [8]	12515
12628–M		Arbel Fauvet Rail (AFR), 59500 Douai, FR [9]	12628

[1] To modify the exemption to authorize intermediate pick-up and deliveries of non-DOT specification cylinders, without an overpack, when transporting Class 8, Division 2.1, 2.2, 2.3 and 4.3 materials.

[2] To modify the exemption to allow for the transportation of an additional Division 2.2 material in non-DOT specification steel portable tanks.

[3] To modify the exemption to eliminate the Fracture Toughness Test requirement and to authorize extending the initial requalification period from 5 years to 10 years of the non-DOT specification steel cylinders when used in specific non-corrosive, dry gas service.

[4] To modify the exemption to authorize periodic external inspection of DOT–4BW240 cylinders as an alternative to periodic hydrostatic testing and inspeciton for the transportation of certain Division 4.3 materials.

[5] To modify the exemption to allow for the transportation of additional Division 2.1 and Class 3 materials in DOT specification tank cars.

[6] To modify the exemption to specifically authorize the transport of waste materials in combination packaging in the same transport vehicle with other Class/Division materials.

[7] To modify the exemption to allow for the transportation of Division 2.1 and additional Class 8 materials in DOT Specification tank cars.

[8] To modify the exemption to authorize, as an optional requirement, the installation of a manhole for non-DOT specification vacuum insulated portable tanks in oxygen service.

[9] To reissue the exemption originally issued on an emergency basis authorizing the use of DOT Specification 51 tank containers that have been designed, constructed and ''U'' stamped in accordance with Section VIII, Division 1 of the ASME Code transporting Division 2.1 and 2.2 materials.

[FR Doc. 01–16663 Filed 7–2–01; 8:45 am]

BILLING CODE 4910–60–M

DEPARTMENT OF TRANSPORTATION

Research and Special Programs Administration (RSPA), DOT

[Docket No. RSPA–99–6355]

Pipeline Safety: Pipeline Integrity Management in High Consequence Areas (Hazardous Liquid Operators With 500 or More Miles of Pipeline)

AGENCY: Office of Pipeline Safety, Research and Special Programs Administration, DOT.

ACTION: Notice of workshop.

SUMMARY: This notice announces two, two-day workshops on 49 CFR part 195.452, ''Pipeline Integrity Management in High Consequence Areas'', effective May 29, 2001. On Day 1, OPS will familiarize participants with the new requirements, and present and seek comments on the approach OPS plans to use for achieving compliance. On Day 2, OPS will provide a forum for participants to share and discuss noteworthy integrity management practices that achieve compliance with the rule.

Workshop Dates and Addresses

(1) The first workshop will be on August 7–8, 2001, from 8:30 a.m. to 5 p.m., at the DoubleTree Hotel Post Oak, 2001 Post Oak Boulevard, Houston, Texas, 77056, 713–961–9300 or 800–566–5216. No later than July 23, 2001, rooms may be reserved within a block identified as ''DOT/IMP Public Meeting Block''.

(2) The second workshop will be on October 10–11, from 8:30 a.m. to 5 p.m., at the Renaissance Houston Hotel, 6 Greenway Plaza East, Houston, Texas, 77046, 713–629–1200 or 800-Hotels-1. No later than September 12, 2001, rooms may be reserved within a block identified as ''DOT/IMP Public Meeting Block''.

FOR FURTHER INFORMATION CONTACT: Beth Callsen (tel: 202–366–4572; E-mail: beth.callsen@rspa.dot.gov). For event planning purposes, please let Ms. Callsen know if you will attend. Also notify Ms. Callsen if you are interested in being a presenter on Day 2 of one or both of the workshops. You can read comments and other related material in the docket on the Internet at: *http://dms.dot.gov.*

SUPPLEMENTARY INFORMATION:

1. Background

OPS's integrity management initiative is intended to improve safety and environmental protection and to provide better assurance to the public about the safety of pipelines. It is also intended to comprehensively address National Transportation Safety Board (NTSB) recommendations, Congressional mandates and pipeline safety and environmental issues raised over the years. It is based on the culmination of experience OPS has gained from pipeline inspections, accident investigations and risk management and system integrity initiatives.

OPS's first integrity management rule (65 FR 75378), issued on November 3, 2000 and effective on May 29, 2001, applies to hazardous liquid operators who own or operate 500 or more miles of pipeline. The rule applies to pipelines that can affect high consequence areas (HCAs), which include populated areas defined by the Census Bureau as urbanized areas or places, unusually sensitive environmental areas, and commercially navigable waterways.

OPS believes that the new rule requires fundamental change in the integrity management practices of many affected pipeline operators. As compliance deadlines approach, OPS is hosting two workshops to promote a better understanding of the new requirements, and to discuss compliance approaches operators are applying to various aspects of the rule. OPS will host additional workshops if needed.

Day 1: Integrity Management Rule—Compliance and Available Resources

Day 1 will feature presentations intended to familiarize participants with the rule requirements and available resources and guidance material. OPS will also present and seek comment on the inspection approach OPS is developing to achieve compliance. Topics will include:

- The rule requirements
- API Standard 1160
- The National Pipeline Mapping System
- The proposed inspection approach
  - —Segment identification inspection and completeness check
  - —Comprehensive program reviews
  - —Inspection of operator program implementation
  - —Managing operator notifications
  - —Enforcement
  - —Clearinghouse and points of contact for questions about the rule
- Additional resources for the industry
- Questions and Answers

Day 2: Forum to Share Noteworthy Integrity Management Practices

Day 2 will feature a series of presentations by pipeline operators on features of their Integrity Management Programs that OPS believes merit wider dissemination. Via the presentations, OPS hopes to encourage a peer-to-peer exchange among operators of innovative approaches being developed to enhance pipeline integrity and comply with the rule. Each presentation will be followed by an open discussion among meeting participants. Based on these discussions, OPS will kick-off development of an on-line forum that will enable continued exchanges between federal and state regulators, representatives of public interest and environmental organizations, the pipeline industry, and other interested parties about noteworthy practices.

Issued in Washington, DC, on June 27, 2001.

Stacey L. Gerard,

Associate Administrator for Pipeline Safety.

[FR Doc. 01–16664 Filed 7–2–01; 8:45 am]

BILLING CODE 4910–60–P

DEPARTMENT OF TRANSPORTATION

Surface Transportation Board

[STB Finance Docket No. 34059]

Providence and Worcester Railroad Company—Operation Exemption—Massachusetts Bay Transportation Authority

Providence and Worcester Railroad Company (P&W) has filed a verified notice of exemption under 49 CFR 1150.31 to operate railroad trackage owned by the Massachusetts Bay Transportation Authority (MBTA), a noncarrier,[1] between milepost QVJ 0.6

[1] MBTA is an agency of the Commonwealth of Massachusetts.

and milepost QVJ 3.1, a distance of approximately 2.5 miles, near Seekonk, Bristol County, MA (line).[2]

According to P&W, it cannot begin operations over the line until the at-grade crossing at Newman Avenue, which was removed by third parties in connection with a roadway improvement project, is restored. P&W notes that it has proceeded with discussions with MBTA and the Town of Seekonk and intends to press for prompt restoration of the crossing. The earliest the transaction could have been consummated was June 27, 2001, 7 days after the exemption was filed.

If the verified notice contains false or misleading information, the exemption is void *ab initio.* Petitions to reopen the proceeding to revoke the exemption under 49 U.S.C. 10502(d) may be filed at any time. The filing of a petition to revoke will not automatically stay the transaction.

An original and 10 copies of all pleadings, referring to STB Finance Docket No. 34059, must be filed with the Surface Transportation Board, Office of the Secretary, Case Control Unit, 1925 K Street, NW, Washington, DC 20423–0001. In addition, a copy of each pleading must be served on Mary A. Tanona, Esq., Providence and Worcester Railroad Company, 75 Hammond Street, Worcester, MA 01610.

Board decisions and notices are available on our website at *www.stb.dot.gov.*

Decided: June 27, 2001.

By the Board, David M. Konschnik, Director, Office of Proceedings.

Vernon A. Williams,

Secretary.

[FR Doc. 01–16694 Filed 7–2–01; 8:45 am]

BILLING CODE 4915–00–P

[2] CSX Transportation, Inc.'s (CSX) discontinuance of trackage rights on the line was previously exempted by the Board in *CSX Transportation, Inc.—Discontinuance of Trackage Rights Exemption—in Bristol County, MA,* STB Docket No. AB–55 (Sub-No. 582X) (STB served Nov. 1, 2000). P&W indicates that CSX has not yet implemented its discontinuance and that CSX is still technically an operator of the line.

DEPARTMENT OF THE TREASURY

Internal Revenue Service

[REG–246256–96]

Proposed Collection; Comment Request for Regulation Project

AGENCY: Internal Revenue Service (IRS), Treasury.

ACTION: Notice and request for comments.

SUMMARY: The Department of the Treasury, as part of its continuing effort to reduce paperwork and respondent burden, invites the general public and other Federal agencies to take this opportunity to comment on proposed and/or continuing information collections, as required by the Paperwork Reduction Act of 1995, Public Law 104–13 (44 U.S.C. 3506(c)(2)(A)). Currently, the IRS is soliciting comments concerning an existing notice of proposed rulemaking and temporary regulation, REG–246256–96, Excise Taxes on Excess Benefit Transactions (§ 53.4958–6).

DATES: Written comments should be received on or before September 4, 2001 to be assured of consideration.

ADDRESSES: Direct all written comments to Garrick R. Shear, Internal Revenue Service, room 5244, 1111 Constitution Avenue NW., Washington, DC 20224.

FOR FURTHER INFORMATION CONTACT: Requests for additional information or copies of the regulation should be directed to Martha R. Brinson, (202) 622–3869, Internal Revenue Service, room 5244, 1111 Constitution Avenue NW., Washington, DC 20224.

SUPPLEMENTARY INFORMATION:

Title: Excise Taxes on Excess Benefit Transactions.

OMB Number: 1545–1623.

Regulation Project Number: REG–246256–96.

Abstract: This regulation relates to the excise taxes on excess benefit transactions under section 4958 of the Internal Revenue Code and affects certain tax-exempt organizations described in Code sections 501(c)(3) and (4). The collection of information entails obtaining and relying on appropriate comparability data and documenting the basis of an organization's determination that compensation is reasonable, or a property transfer (or transfer of the right to use property) is at fair market value.

Current Actions: There is no change to this existing regulation.

Type of Review: Extension of a currently approved collection.

Affected Public: Not-for-profit institutions.

Estimated Number of Respondents: 150,427.

Estimated Time Per Respondent: 6 hr., 3 minutes.

Estimated Total Annual Burden Hours: 910,083.

The following paragraph applies to all of the collections of information covered by this notice:

An agency may not conduct or sponsor, and a person is not required to respond to, a collection of information unless the collection of information displays a valid OMB control number. Books or records relating to a collection of information must be retained as long as their contents may become material in the administration of any internal revenue law. Generally, tax returns and tax return information are confidential, as required by 26 U.S.C. 6103.

Request for Comments

Comments submitted in response to this notice will be summarized and/or included in the request for OMB approval. All comments will become a matter of public record. Comments are invited on: (a) Whether the collection of information is necessary for the proper performance of the functions of the agency, including whether the information shall have practical utility; (b) the accuracy of the agency's estimate of the burden of the collection of information; (c) ways to enhance the quality, utility, and clarity of the information to be collected; (d) ways to minimize the burden of the collection of information on respondents, including through the use of automated collection techniques or other forms of information technology; and (e) estimates of capital or start-up costs and costs of operation, maintenance, and purchase of services to provide information.

Approved: June 26, 2001.

Garrick R. Shear,

IRS Reports Clearance Officer.

[FR Doc. 01–16718 Filed 7–2–01; 8:45 am]

BILLING CODE 4830–01–P

DEPARTMENT OF THE TREASURY

Internal Revenue Service

Proposed Collection; Comment Request for Form 8835

AGENCY: Internal Revenue Service (IRS), Treasury.

ACTION: Notice and request for comments.

SUMMARY: The Department of the Treasury, as part of its continuing effort to reduce paperwork and respondent burden, invites the general public and other Federal agencies to take this opportunity to comment on proposed and/or continuing information collections, as required by the Paperwork Reduction Act of 1995, Public Law 104–13 (44 U.S.C. 3506(c)(2)(A)). Currently, the IRS is soliciting comments concerning Form 8835, Renewable Electricity Production Credit.

DATES: Written comments should be received on or before September 4, 2001 to be assured of consideration.

ADDRESSES: Direct all written comments to Garrick R. Shear, Internal Revenue Service, room 5244, 1111 Constitution Avenue NW., Washington, DC 20224.

FOR FURTHER INFORMATION CONTACT: Requests for additional information or copies of the form and instructions should be directed to Allan Hopkins, (202) 622–6665, Internal Revenue Service, Room 5244, 1111 Constitution Avenue NW., Washington, DC 20224.

SUPPLEMENTARY INFORMATION:

Title: Renewable Electricity Production Credit.

OMB Number: 1545–1362.

Form Number: 8835.

Abstract: Form 8835 is used to claim the renewable electricity production credit. The credit is allowed for the sale of electricity produced in the United States or U.S. possessions from qualified energy resources. The IRS uses the information reported on the form to ensure that the credit is correctly computed.

Current Actions: There are no changes being made to Form 8835 at this time.

Type of Review: Extension of a current OMB approval.

Affected Public: Business or other for-profit organizations and individuals.

Estimated Number of Respondents: 70.

Estimated Time Per Respondent: 12 hrs., 14 min.

Estimated Total Annual Burden Hours: 857.

The following paragraph applies to all of the collections of information covered by this notice:

An agency may not conduct or sponsor, and a person is not required to respond to, a collection of information unless the collection of information displays a valid OMB control number. Books or records relating to a collection of information must be retained as long as their contents may become material in the administration of any Internal Revenue law. Generally, tax returns and tax return information are confidential, as required by 26 U.S.C. 6103.

Request for Comments

Comments submitted in response to this notice will be summarized and/or included in the request for OMB approval. All comments will become a matter of public record. Comments are invited on: (a) Whether the collection of information is necessary for the proper performance of the functions of the agency, including whether the information shall have practical utility; (b) the accuracy of the agency's estimate of the burden of the collection of information; (c) ways to enhance the quality, utility, and clarity of the information to be collected; (d) ways to minimize the burden of the collection of information on respondents, including through the use of automated collection techniques or other forms of information technology; and (e) estimates of capital or start-up costs and costs of operation, maintenance, and purchase of services to provide information.

Approved: June 27, 2001.

Garrick R. Shear,

IRS Reports Clearance Officer.

[FR Doc. 01–16719 Filed 7–2–01; 8:45 am]

BILLING CODE 4830–01–P

DEPARTMENT OF THE TREASURY

Internal Revenue Service

Proposed Collection; Comment Request for Form 1120–L

AGENCY: Internal Revenue Service (IRS), Treasury.

ACTION: Notice and request for comments.

SUMMARY: The Department of the Treasury, as part of its continuing effort to reduce paperwork and respondent burden, invites the general public and other Federal agencies to take this opportunity to comment on proposed and/or continuing information collections, as required by the Paperwork Reduction Act of 1995, Public Law 104–13 (44 U.S.C. 3506(c)(2)(A)). Currently, the IRS is soliciting comments concerning Form 1120–L, U.S. Life Insurance Company Income Tax Return.

DATES: Written comments should be received on or before September 4, 2001 to be assured of consideration.

ADDRESSES: Direct all written comments to Garrick R. Shear, Internal Revenue Service, room 5244, 1111 Constitution Avenue NW., Washington, DC 20224.

FOR FURTHER INFORMATION CONTACT: Requests for additional information or copies of the form and instructions should be directed to Carol Savage, (202) 622–3945, Internal Revenue Service, room 5242, 1111 Constitution Avenue NW., Washington, DC 20224.

SUPPLEMENTARY INFORMATION:

Title: U.S. Life Insurance Company Income Tax Return.

OMB Number: 1545–0128.

Form Number: 1120–L.

Abstract: Life insurance companies are required to file an annual return of income and compute and pay the tax due. The data is used to insure that the companies have correctly reported taxable income and paid the correct tax.

Current Actions: There are no changes being made to the form at this time.

Type of Review: Extension of a currently approved collection.

Affected Public: Business or other for-profit organizations.

Estimated Number of Respondents: 2,440.

Estimated Time Per Respondent: 162 hours, 2 minutes.

Estimated Total Annual Burden Hours: 388,863.

The following paragraph applies to all of the collections of information covered by this notice:

An agency may not conduct or sponsor, and a person is not required to respond to, a collection of information unless the collection of information displays a valid OMB control number. Books or records relating to a collection of information must be retained as long as their contents may become material in the administration of any internal revenue law. Generally, tax returns and tax return information are confidential, as required by 26 U.S.C. 6103.

Request for Comments

Comments submitted in response to this notice will be summarized and/or included in the request for OMB approval. All comments will become a matter of public record. Comments are invited on: (a) Whether the collection of information is necessary for the proper performance of the functions of the agency, including whether the information shall have practical utility; (b) the accuracy of the agency's estimate of the burden of the collection of information; (c) ways to enhance the quality, utility, and clarity of the information to be collected; (d) ways to minimize the burden of the collection of information on respondents, including through the use of automated collection techniques or other forms of information technology; and (e) estimates of capital or start-up costs and costs of operation, maintenance, and purchase of services to provide information.

Approved: June 27, 2001.

Garrick R. Shear,

IRS Reports Clearance Officer.

[FR Doc. 01–16720 Filed 7–2–01; 8:45 am]

BILLING CODE 4830–01–P

DEPARTMENT OF THE TREASURY

Internal Revenue Service

Proposed Collection; Comment Request for Form 8453–NR

AGENCY: Internal Revenue Service (IRS), Treasury.

ACTION: Notice and request for comments.

SUMMARY: The Department of the Treasury, as part of its continuing effort to reduce paperwork and respondent burden, invites the general public and other Federal agencies to take this opportunity to comment on proposed and/or continuing information collections, as required by the Paperwork Reduction Act of 1995, Public Law 104–13 (44 U.S.C. 3506(c)(2)(A)). Currently, the IRS is soliciting comments concerning Form 8453–NR, U.S. Nonresident Alien Income Tax Declaration for Electronic Filing.

DATES: Written comments should be received on or before September 4, 2001 to be assured of consideration.

ADDRESSES: Direct all written comments to Garrick R. Shear, Internal Revenue Service, room 5244, 1111 Constitution Avenue NW., Washington, DC 20224.

FOR FURTHER INFORMATION CONTACT: Requests for additional information or copies of the form and instructions should be directed to Larnice Mack, (202) 622–3179, Internal Revenue Service, room 5244, 1111 Constitution Avenue NW., Washington, DC 20224.

SUPPLEMENTARY INFORMATION:

Title: U.S. Nonresident Alien Income Tax Declaration for Electronic Filing.

OMB Number: 1545–1274.

Form Number: Form 8453–NR.

Abstract: Form 8453–NR is used to secure taxpayer signatures and declaration in conjunction with the Electronic Filing Program. This form, together with the electronic transmission, will comprise the taxpayer's income tax return.

Current Actions: There are no changes being made to the form at this time.

Type of Review: Extension of a currently approved collection.

Affected Public: Individuals or households.

Estimated Number of Respondents: 5,000.

Estimated Time Per Respondent: 15 minutes.

Estimated Total Annual Burden Hours: 1,250.

The following paragraph applies to all of the collections of information covered by this notice:

An agency may not conduct or sponsor, and a person is not required to respond to, a collection of information unless the collection of information displays a valid OMB control number. Books or records relating to a collection of information must be retained as long as their contents may become material in the administration of any internal revenue law. Generally, tax returns and tax return information are confidential, as required by 26 U.S.C. 6103.

Request for Comments

Comments submitted in response to this notice will be summarized and/or included in the request for OMB approval. All comments will become a matter of public record. Comments are invited on: (a) Whether the collection of information is necessary for the proper performance of the functions of the agency, including whether the information shall have practical utility; (b) the accuracy of the agency's estimate of the burden of the collection of information; (c) ways to enhance the quality, utility, and clarity of the information to be collected; (d) ways to minimize the burden of the collection of information on respondents, including through the use of automated collection techniques or other forms of information technology; and (e) estimates of capital or start-up costs and costs of operation, maintenance, and purchase of services to provide information.

Approved: June 27, 2001.

Garrick R. Shear,

IRS Reports Clearance Officer.

[FR Doc. 01–16721 Filed 7–2–01; 8:45 am]

BILLING CODE 4830–01–P

DEPARTMENT OF THE TREASURY

Internal Revenue Service

[PS–100–88]

Proposed Collection: Comment Request for Regulation Project

AGENCY: Internal Revenue Service (IRS), Treasury.

ACTION: Notice and request for comments.

SUMMARY: The Department of the Treasury, as part of its continuing effort to reduce paperwork and respondent burden, invites the general public and other Federal agencies to take this opportunity to comment on proposed and/or continuing information collections, as required by the Paperwork Reduction Act of 1995, Public Law 104–13 (44 U.S.C. 3506(c)(2)(A)). Currently, the IRS is soliciting comments concerning an existing final regulation, PS–100–88 (TD 8540), Valuation Tables (§§ 1.7520–1 through 1.7520–4, 20.7520–1 through 20.7520–4, and 25.7520–1 through 25.7520–4).

DATES: Written comments should be received on or before September 4, 2001 to be assured of consideration.

ADDRESSES: Direct all written comments to Garrick R. Shear, Internal Revenue Service, room 5244, 1111 Constitution Avenue NW., Washington, DC 20224.

FOR FURTHER INFORMATION CONTACT: Requests for additional information or copies of the regulation should be directed to Larnice Mack, (202) 622–3179, Internal Revenue Service, room 5244, 1111 Constitution Avenue NW., Washington, DC 20224.

SUPPLEMENTARY INFORMATION:

Title: Valuation Tables.

OMB Number: 1545–1343.

Regulation Project Number: PS–100–88.

Abstract: Internal Revenue Code section 7520 provides rules for determining the valuation of an annuity, an interest for life or a term of years, or a remainder or reversionary interest. Code section 7530(a) allows a respondent to make an election to value an interest that qualifies, in whole or in part, for a charitable deduction, by use of a different interest rate component that is more favorable to the respondent. This regulation requires individuals or fiduciaries making the election to file a statement with their estate or gift tax return.

Current Actions: There is no change to this existing regulation.

Type of Review: Extension of OMB approval.

Affected Public: Individuals or households.

Estimated Number of Respondents: 6000.

Estimated Time Per Respondent: 45 minutes.

Estimated Total Annual Burden Hours: 4,500.

The following paragraph applies to all of the collections of information covered by this notice:

An agency may not conduct or sponsor, and a person is not required to respond to, a collection of information unless the collection of information displays a valid OMB control number. Books or records relating to a collection of information must be retained as long as their contents may become material in the administration of any internal revenue law. Generally, tax returns and tax return information are confidential, as required by 26 U.S.C. 6103.

Request for Comments

Comments submitted in response to this notice will be summarized and/or included in the request for OMB approval. All comments will become a matter of public record. Comments are invited on: (a) Whether the collection of information is necessary for the proper performance of the functions of the agency, including whether the information shall have practical utility; (b) the accuracy of the agency's estimate of the burden of the collection of information; (c) ways to enhance the

quality, utility, and clarity of the information to be collected; (d) ways to minimize the burden of the collection of information on respondents, including through the use of automated collection techniques or other forms of information technology; and (e) estimates of capital or start-up costs and costs of operation, maintenance, and purchase of services to provide information.

Approved: June 27, 2001.

Garrick R. Shear,

IRS Reports Clearance Officer.

[FR Doc. 01–16722 Filed 7–3–01; 8:45 am]

BILLING CODE 4830–01–P

DEPARTMENT OF THE TREASURY

Internal Revenue Service

[PS–89–91]

Proposed Collection: Comment Request for Regulation Project

AGENCY: Internal Revenue Service (IRS), Treasury.

ACTION: Notice and request for comments.

SUMMARY: The Department of the Treasury, as part of its continuing effort to reduce paperwork and respondent burden, invites the general public and other Federal agencies to take this opportunity to comment on proposed and/or continuing information collections, as required by the Paperwork Reduction Act of 1995, Public Law 104–13 (44 U.S.C. 3506(c)(2)(A)). Currently, the IRS is soliciting comments concerning an existing final regulation, PS–89–91 (TD 8622), Exports of Chemicals That Deplete the Ozone Layer; Special Rules for Certain Medical Uses of Chemicals That Deplete the Ozone Layer (§§ 52.4682–2(b), 52.4682–2(d), 52.4682–5(d), and 52.4682–5(f)).

DATES: Written comments should be received on or before September 4, 2001 to be assured of consideration.

ADDRESSES: Direct all written comments to Garrick R. Shear, Internal Revenue Service, room 5244, 1111 Constitution Avenue NW., Washington, DC 20224.

FOR FURTHER INFORMATION CONTACT: Requests for additional information or copies of the regulation should be directed to Larnice Mack, (202) 622–3179, Internal Revenue Service, room 5244, 1111 Constitution Avenue NW., Washington, DC 20224.

SUPPLEMENTARY INFORMATION:

Title: Exports of Chemicals That Deplete the Ozone Layer; Special Rules for Certain Medical Uses of Chemicals That Deplete the Ozone Layer.

OMB Number: 1545–1361.

Regulation Project Number: PS–89–91.

Abstract: This regulation provides reporting and recordkeeping rules relating to taxes imposed on exports of ozone-depleting chemicals (ODCs), taxes imposed on ODCs used as medical sterilants or propellants in metered-dose inhalers, and floor stocks taxes on ODCs. The rules affect persons who manufacture, import, export, sell, or use ODCs.

Current Actions: There is no change to this existing regulation.

Type of Review: Extension of a currently approved collection.

Affected Public: Business or other for-profit organizations.

Estimated Number of Recordkeepers: 705.

Estimated Time Per Recordkeeper: 12 minutes.

Estimated Total Annual Recordkeeping Burden Hours: 141.

Estimated Number of Respondents: 600.

Estimated Time Per Respondent: 6 minutes.

Estimated Total Annual Reporting Burden Hours: 60.

The following paragraph applies to all of the collections of information covered by this notice:

An agency may not conduct or sponsor, and a person is not required to respond to, a collection of information unless the collection of information displays a valid OMB control number. Books or records relating to a collection of information must be retained as long as their contents may become material in the administration of any internal revenue law. Generally, tax returns and tax return information are confidential, as required by 26 U.S.C. 6103.

Request for Comments

Comments submitted in response to this notice will be summarized and/or included in the request for OMB approval. All comments will become a matter of public record. Comments are invited on: (a) Whether the collection of information is necessary for the proper performance of the functions of the agency, including whether the information shall have practical utility; (b) the accuracy of the agency's estimate of the burden of the collection of information; (c) ways to enhance the quality, utility, and clarity of the information to be collected; (d) ways to minimize the burden of the collection of information on respondents, including through the use of automated collection techniques or other forms of information technology; and (e) estimates of capital or start-up costs and costs of operation, maintenance, and purchase of services to provide information.

Approved: June 27, 2001.

Garrick R. Shear,

IRS Reports Clearance Officer.

[FR Doc. 01–16723 Filed 7–2–01; 8:45 am]

BILLING CODE 4830–01–P

Federal Register

Tuesday,
July 3, 2001

Part II

Environmental Protection Agency

40 CFR Part 63

National Emission Standards for Hazardous Air Pollutants for Coke Ovens: Pushing, Quenching, and Battery Stacks; Proposed Rule

ENVIRONMENTAL PROTECTION AGENCY

40 CFR Part 63

[FRL–6939–2]

RIN 2060–AH55

National Emission Standards for Hazardous Air Pollutants for Coke Ovens: Pushing, Quenching, and Battery Stacks

AGENCY: Environmental Protection Agency (EPA).

ACTION: Proposed rule.

SUMMARY: This action proposes national emission standards for hazardous air pollutants (NESHAP) for new and existing coke oven batteries. The EPA has identified coke oven batteries as a major source of hazardous air pollutants (HAP) emissions. These NESHAP address emissions from pushing, quenching, and battery stacks. Emission standards previously promulgated address emissions from charging, topside leaks, and door leaks.

These proposed standards will implement section 112(d) of the Clean Air Act (CAA) by requiring all major sources to meet HAP emission standards reflecting the application of the maximum achievable control technology (MACT). The HAP emitted by this source category include coke oven emissions, polycyclic organic matter, and volatile organic compounds such as benzene and toluene. Exposure to these substances has been demonstrated to cause chronic and acute health effects.

DATES: *Comments.* Submit comments on or before October 1, 2001.

Public Hearing. If anyone contacts the EPA requesting to speak at a public hearing by July 23, 2001, a public hearing will be held on August 2, 2001.

ADDRESSES: *Comments.* By U.S. Postal Service, send comments (in duplicate if possible) to: Air and Radiation Docket and Information Center (6102), Attention Docket Number A–2000–34, U.S. EPA, 1200 Pennsylvania Avenue, NW, Washington, DC 20460. In person or by courier, deliver comments (in duplicate if possible) to: Air and Radiation Docket and Information Center (6102), Attention Docket No. A–2000–34, Room M–1500, U.S. EPA, 401 M Street, SW., Washington, DC 20460. The EPA requests a separate copy also be sent to the contact person listed below (see **FOR FURTHER INFORMATION CONTACT**).

Public Hearing. If a public hearing is held, it will be held at the EPA Office of Administration Auditorium, Research Triangle Park, NC beginning at 10 a.m.

Docket. Docket No. A–2000–34 contains supporting information used in developing the proposed standards. The docket is located at the U.S. EPA, 401 M Street SW, Washington, DC 20460 in room M–1500, Waterside Mall (ground floor), and may be inspected from 8:30 a.m. to 5:30 p.m., Monday through Friday, excluding legal holidays.

FOR FURTHER INFORMATION CONTACT: Lula Melton, Metals Group, Emission Standards Division (MD–13), U.S. EPA, Research Triangle Park, NC 27711, telephone number (919) 541–2910, electronic mail address melton.lula@epa.gov.

SUPPLEMENTARY INFORMATION:

Comments. Comments and data may be submitted by electronic mail (e-mail) to: air-and-r-docket@epa.gov. Electronic comments must be submitted as an ASCII file to avoid the use of special characters and encryption problems and will also be accepted on disks in WordPerfect® version 5.1, 6.1 or Corel 8 file format. All comments and data submitted in electronic form must note the docket number: A–2000–34. No confidential business information (CBI) should be submitted by e-mail. Electronic comments may be filed online at many Federal Depository Libraries.

Commenters wishing to submit proprietary information for consideration must clearly distinguish such information from other comments and label it as CBI. Send submissions containing such proprietary information directly to the following address, and not to the public docket, to ensure that proprietary information is not inadvertently placed in the docket: Attention: Roberto Morales, U.S. EPA, OAQPS Document Control Officer, c/o Lula Melton, 411 W. Chapel Hill Street, Room 740B, Durham, NC 27711. The EPA will disclose information identified as CBI only to the extent allowed by the procedures set forth in 40 CFR part 2. If no claim of confidentiality accompanies a submission when it is received by the EPA, the information may be made available to the public without further notice to the commenter.

Public Hearing. Persons interested in presenting oral testimony or inquiring as to whether a hearing is to be held should contact Mary Hinson, Metals Group, Emission Standards Division, U.S. EPA, Research Triangle Park, NC 27711, telephone number (919) 541–5601, in advance of the public hearing. Persons interested in attending the public hearing must also call Mary Hinson to verify the time, date, and location of the hearing. The public hearing will provide interested parties the opportunity to present data, views, or arguments concerning these proposed emission standards.

Docket. The docket is an organized and complete file of all the information considered by the EPA in the development of this proposed rule. The docket is a dynamic file because material is added throughout the rulemaking process. The docketing system is intended to allow members of the public and industries involved to readily identify and locate documents so that they can effectively participate in the rulemaking process. Along with the proposed and promulgated standards and their preambles, the contents of the docket will serve as the record in the case of judicial review. (See section 307(d)(7)(A) of the CAA.) The regulatory text and other materials related to this rulemaking are available for review in the docket or copies may be mailed on request from the Air Docket by calling (202) 260–7548. A reasonable fee may be charged for copying docket materials.

World Wide Web (WWW). In addition to being available in the docket, an electronic copy of today's proposed rule will also be available on the WWW through the Technology Transfer Network (TTN). Following signature, a copy of the rule will be placed on the TTN's policy and guidance page for newly proposed or promulgated rules at *http://www.epa.gov/ttn/oarpg.* The TTN provides information and technology exchange in various areas of air pollution control. If more information regarding the TTN is needed, call the TTN HELP line at (919) 541–5384.

Regulated Entities. Categories and entities potentially regulated by this action include:

Category	SIC	NAICS	Example of regulated entities
Coke oven batteries.	3312	331111	Coke plants at integrated iron and steel companies.
		324199	Coke plants not at integrated iron and steel companies.

This table is not intended to be exhaustive, but rather provides a guide for readers regarding entities likely to be regulated by this action. To determine

whether your facility is regulated by this action, you should examine the applicability criteria in § 63.7281 of the proposed rule. If you have any questions regarding the applicability of this action to a particular entity, consult the person listed in the preceding **FOR FURTHER INFORMATION CONTACT** section.

Outline

The information presented in this preamble is organized as follows:

I. Background

A. What is the source of authority for development of NESHAP?
B. What criteria are used in the development of NESHAP?
C. What source category is affected by the proposed rule?
D. What is cokemaking?
E. What HAP are emitted from cokemaking?
F. What are the health effects associated with emissions from pushing, quenching, and battery stacks?

II. Summary of the Proposed Rule

A. What are the affected sources and emission points?
B. What are the requirements for pushing?
C. What are the requirements for soaking?
D. What are the requirements for quenching?
E. What are the requirements for battery stacks?
F. What are the operation and maintenance requirements?
G. What are the notification, recordkeeping, and reporting requirements?
H. What are the compliance deadlines?

III. Rationale for Selecting the Proposed Standards

A. How did we select the affected source?
B. How did we select the pollutants?
C. How did we determine the bases and levels of the proposed standards?
D. How did we select the operation and maintenance requirements?
E. How did we select the notification, recordkeeping, and reporting requirements?

IV. Summary of Environmental, Energy, and Economic Impacts

A. What are the air quality impacts?
B. What are the cost impacts?
C. What are the economic impacts?
D. What are the non-air environmental and energy impacts?

V. Solicitation of Comments and Public Participation

VI. Administrative Requirements

A. Executive Order 12866, Regulatory Planning and Review
B. Executive Order 13132, Federalism
C. Executive Order 13084, Consultation and Coordination with Indian Tribal Governments
D. Executive Order 13045, Protection of Children from Environmental Health Risks and Safety Risks
E. Unfunded Mandates Reform Act of 1995
F. Regulatory Flexibility Act (RFA), as Amended by the Small Business Regulatory Enforcement Fairness Act of 1996 (SBREFA), 5 U.S.C. *et seq.*
G. Paperwork Reduction Act
H. National Technology Transfer and Advancement Act

I. Background

A. What Is the Source of Authority for Development of NESHAP?

Section 112 of the CAA requires us (the EPA) to establish technology-based regulations for all categories and subcategories of major and area sources emitting one or more of the HAP listed in section 112(b). Major sources are those that emit or have the potential to emit at least 10 tons per year (tpy) of any single HAP or 25 tpy of any combination of HAP. Additional standards may be developed later under section 112(f) to address residual risk that may remain even after application of the technology-based controls.

B. What Criteria Are Used in the Development of NESHAP?

The NESHAP for new and existing sources developed under section 112 must reflect the maximum degree of reduction of HAP emissions that is achievable taking into consideration the cost of achieving the emissions reductions, any non-air quality health and environmental benefits, and energy requirements. Emissions reductions may be accomplished through promulgation of emission standards under section 112(d). These may include, but are not limited to:

- Reducing the volume of emissions of HAP, or eliminating the emissions through process changes, substitution of materials, or other modifications;
- Enclosing systems or processes to eliminate emissions;
- Collecting, capturing, or treating such pollutants when released from a process, stack, storage, or fugitive emissions point;
- Design, equipment, work practice or operational standards or any combination thereof if it is not feasible to prescribe or enforce an emission standard (including requirements for operator training or certification); or
- A combination of the above.

Section 112 requires us to establish a minimum baseline or ''floor'' for standards. For new sources, the standards for a source category or subcategory cannot be less stringent than the emission control that is achieved in practice by the best-controlled similar source. The standards for existing sources can be less stringent than the standards for new sources, but they cannot be less stringent than the average emission limitation achieved by the best-performing 12 percent of existing sources (excluding certain sources) for categories and subcategories with 30 or more sources. For categories and subcategories with fewer than 30 sources, the standards cannot be less stringent than the average emission limitation achieved by the best-performing five sources.

For NESHAP developed to date, we have used several different approaches to determine the MACT floor for individual source categories depending on the type, quality, and applicability of available data. These approaches include determining a MACT floor based on: (1) Emissions test data that characterize actual HAP emissions from presently controlled sources included in the source category, (2) existing federally-enforceable emission limitations specified in air regulations and facility air permits applicable to the individual sources comprising the source category, and (3) application of a specific type of control technology for air emissions currently being used by sources in the source category or by sources with similar pollutant stream characteristics.

To determine the MACT standard, we evaluate several alternatives (which may be different levels of emission control or different levels of applicability or both) to select the one that best reflects the appropriate MACT level. The selected alternative may be more stringent than the MACT floor, but the control level selected must be technically achievable. In selecting an alternative, we consider the achievable HAP emissions reductions (and possibly other pollutants that are co-controlled), cost and economic impacts, energy impacts, and other environmental impacts. The objective is to achieve the maximum degree of emission reduction without unreasonable economic or other impacts. The regulatory alternatives selected for new and existing sources may be different because of different MACT floors, and separate regulatory decisions may be made for new and existing sources.

C. What Source Category Is Affected by the Proposed Rule?

The source category affected by the proposed rule is defined as pushing, quenching, and battery stacks at coke plants. Section 112(c) of the CAA requires us to list all categories of major and area sources of HAP for which we would develop national emission standards. We published the initial list of source categories on July 16, 1992 (57 FR 31576). The list contains a category

entitled ''Coke Ovens: Pushing, Quenching, and Battery Stacks'' based on our determination that coke oven batteries are (or are a part of) a major source of HAP emissions and emit several of the HAP listed in section 112(b) of the CAA. Emissions data show that coke oven batteries emit, or have the potential to emit 10 tpy or more of coke oven emissions or 25 tpy or more of coke oven emissions and other listed HAP.

D. What Is Cokemaking?

The coke industry consists of two sectors, integrated plants and merchant plants. Integrated plants are owned by or affiliated with iron- and steel-producing companies that produce furnace coke primarily for consumption in their own blast furnaces. There are 14 integrated plants owned by nine iron and steel companies. These plants account for 80 percent of United States (U.S.) coke production. Independent merchant plants produce mostly foundry coke for sale on the open market. Foundry coke is used in foundry furnaces for melting scrap iron to produce iron castings. There are 11 merchant plants. Although coke is produced in 11 States, two-thirds of the capacity is in three States: Indiana, Pennsylvania, and Alabama. As of January 2000, there were 25 coke plants operating 68 coke oven batteries; 58 were by-product batteries, and 10 were non-recovery batteries.

A by-product battery consists of 20 to 100 adjacent ovens with common side walls made of high quality silica and other types of refractory brick. Typically, the individual slot ovens are 11 to 16.8 meters (m) long, 0.35 to 0.5 m wide, and 2.5 to 6 m high. The walls separating adjacent ovens, as well as each end wall, are made up of a series of heating flues. Most by-product batteries in the U.S. (56 out of 58) use a vertical flue design. Each oven wall typically has 25 to 37 flues that run vertically from the bottom to the top of the oven, and the flues heat the walls of adjacent ovens. The heating (underfire) systems for vertical flue batteries fall into two general classes: underjet and gun-flue. In the underjet heating system, the flue gas is introduced into each flue from piping in the basement of the battery, and the gas flow to each flue can be metered and controlled. The gun-flue system introduces the gas through a horizontal gas duct extending the length of each wall slightly below the oven floorline. Two by-product batteries referred to as Semet Solvay batteries have horizontal flues with physical and operational characteristics that differ substantially from vertical flue batteries.

In a coke oven battery, coal undergoes destructive distillation to produce coke. A weighed amount or specific volume of coal is discharged from the coal bunker into a larry car—a charging vehicle that moves along the top of the battery. The larry car is positioned over the empty, hot oven; the lids on the charging ports are removed; and the coal is discharged from the hoppers of the larry car into the oven. Each oven holds between 15 and 25 tons of coal. To minimize the escape of gases from the oven during charging, steam aspiration is used to draw gases from the space above the charged coal into a collecting main. The charging port lids are replaced and peaks of coal that form directly under the charging ports are leveled.

The coal is heated in the oven in the absence of air to temperatures approaching 2,000°F which drives off most of the volatile organic constituents of the coal as gases and vapors, forming coke which consists almost entirely of carbon. The organic gases and vapors that evolve are removed through an offtake system and sent to a by-product plant for chemical recovery and coke oven gas cleaning. Air is prevented from leaking into the ovens by maintaining a positive back pressure of about 10 millimeters (mm) of water.

Coking temperatures generally range from 1,650 to 2,000°F and are on the higher side of the range to produce blast furnace coke. Coking continues for 15 to 18 hours to produce blast furnace coke and 25 to 30 hours to produce foundry coke. The coking time is determined by the coal mixture, moisture content, rate of underfiring, and the desired properties of the coke. When demand for coke is low, coking times are extended and temperatures lowered. Battery shut downs are avoided because cooling the battery results in structural damage.

At the end of the coking cycle, the oven is dampered off the collection main, and the standpipe cap is opened to relieve oven pressure. This period in the coking cycle is called soaking. Volatile gases exiting through the open standpipe are ignited if they fail to self-ignite and are allowed to burn until the oven has been pushed. Doors at both ends of the oven are removed, and the incandescent coke is pushed out of the oven by a ram that is extended from the pusher machine. The coke is pushed through a coke guide into a special rail car, called a quench car, which traverses the coke side of the battery. The quench car carries the coke to a quench tower, typically located at the end of a row of batteries. Inside the quench tower, the hot coke is deluged with water so that it will not continue to burn after being exposed to air. The quenched coke is discharged onto an inclined ''coke wharf'' to allow excess water to drain and to cool the coke.

There are two non-recovery plants operating in the U.S. As the name implies, this process does not recover the chemical by-products as does the by-product coking process discussed above. All of the coke oven gas is burned, and instead of recovery of chemicals, this process allows for heat recovery and cogeneration of electricity. Non-recovery ovens are of a horizontal design (as opposed to the vertical slot oven used in the by-product process) with a typical range of 30 to 60 ovens per battery. The oven is generally between 9 and 14 m long and 1.8 to 3.7 m wide. The internal oven chamber is usually semi-cylindrical in shape with the apex of the arch 1.5 to 3.7 m above the oven floor. Each oven is equipped with two doors, one on each side of the horizontal oven, but there are no lids or offtakes as found on by-product ovens. The oven is charged through the oven doorway with a coal conveyor rather than from the top through charging ports.

After an oven is charged, carbonization begins as a result of the hot oven brickwork from the previous charge. Combustion products and volatiles that evolve from the coal mass are burned in the chamber above the coal, in the gas pathway through the walls, and beneath the oven in sole flues. Each oven chamber has two to six downcomers in each oven wall, and the sole flue may be subdivided into separate flues that are supplied by the downcomers. The sole flue is designed to heat the bottom of the coal charge by conduction while radiant and convective heat flow is produced above the coal charge.

Primary combustion air is introduced into the oven chamber above the coal through one of several dampered ports in the door. The dampers are adjusted to maintain the proper temperature in the oven crown. Outside air may also be introduced into the sole flues; however, additional air is usually required in the sole flue only for the first hour or two after charging. All gas flow is a result of the natural draft (there are no exhausters), and the oven is maintained under a negative pressure. Consequently, the ovens do not leak as do the by-product ovens maintained under a positive pressure. The combustion gases are removed from the ovens and directed to the stack through a waste heat tunnel that is located on top of the battery centerline and extends the length of the battery.

Pushing and quenching operations are similar to those at by-product coke oven batteries. One difference in pushing is that the height of fall of the hot coke is less for the non-recovery oven because of its horizontal rather than vertical design. With respect to emissions, there are two major advantages of the non-recovery process: (1) The ovens operate under negative pressure which eliminates leaks from doors, lids and offtakes during coking; and (2) wastewater and solid wastes associated with by-product recovery plants are not generated.

E. What HAP Are Emitted From Cokemaking?

The primary HAP emitted from cokemaking is listed as ''coke oven emissions,'' which includes many organic compounds. Constituents of primary interest because of adverse health effects include semi-volatiles such as polycyclic organic matter (POM) and polynuclear aromatic hydrocarbons (PAH). The emissions also include volatile organic compounds, such as benzene, toluene, and xylene.

Coke oven emissions can be released when the oven is charged with coal. During coking with the oven under positive pressure, emissions occur from leaking doors, lids, and offtakes. On rare occasions during an equipment failure or process upset, coke oven emissions may occur from bypass stacks. We have developed emission standards for each of these emission points with limits for charging, doors, lids, and offtakes and a requirement to flare any bypassed coke oven gas (40 CFR part 63, subpart L).

Coke oven emissions are also released from pushing and quenching, and emissions are especially heavy when the coal is not fully coked. This condition is called a ''green push'' and results in a large plume of emissions when the coke is pushed. These emissions typically overwhelm any capture system that may be employed at the oven to control particulate emissions. Green pushes are minimized by diligent work practices that include routine operation and maintenance procedures. In addition, diagnostic procedures are initiated when a green push occurs to determine its cause followed by corrective actions to prevent its recurrence. Additional procedures used to control emissions from quench towers include prohibiting the use of untreated wastewater for quenching, using baffles in the quench tower to control particulate matter, and maintaining the baffles in good operating condition.

Coke oven emissions also occur from battery stacks when raw coke oven gas leaks through cracks in the oven wall and into the heating flues. Battery stack emissions are controlled by monitoring the stack opacity when each oven is charged, and if a high opacity occurs, by implementing diagnostic procedures to determine the cause of the problem and taking corrective actions.

Emissions of HAP also occur from the by-product plant that recovers various chemicals from the coke oven gas. The primary HAP in these emissions is benzene. We promulgated NESHAP for benzene emissions from by-product plants (40 CFR part 61, subpart L).

F. What Are the Health Effects Associated With Emissions From Pushing, Quenching, and Battery Stacks?

The HAP that would be controlled with this proposed rule are associated with a variety of adverse health effects. These adverse health effects include chronic health disorders (e.g., blood disorders, damage to the central nervous system, and respiratory lesions) and acute health disorders (e.g., irritation of skin, eyes, and mucous membranes and depression of the central nervous system). We have classified coke oven emissions and benzene as known human carcinogens and seven PAH components as probable human carcinogens.

No information is available on the effects of coke oven emissions in humans from acute (short-term) exposure. Animal studies have reported weakness, depression, shortness of breath, general edema, and effects on the liver from acute oral exposure to coke oven emissions. Chronic (long-term) exposure to coke oven emissions in humans results in conjunctivitis, severe dermatitis, and lesions of the respiratory system and digestive system. Studies of coke oven workers have reported an increase in cancer of the lung, trachea, bronchus, kidney, prostate, and other sites. Animal studies have reported tumors of the lung and skin from inhalation exposure to coal tar. We have classified coke oven emissions as a Group A, known human carcinogen.

The term POM defines a broad class of compounds that includes the PAH compounds, of which benzo[a]pyrene is a member. Skin exposures to mixtures of PAH cause skin disorders in humans and animals. No information is available on the reproductive or developmental effects of POM in humans, but animal studies have reported that oral exposure to benzo[a]pyrene causes reproductive and developmental effects. Human studies have reported an increase in lung cancer in humans exposed to POM-bearing mixtures including coke oven emissions, roofing tar emissions, and cigarette smoke. Animal studies have reported respiratory tract tumors from inhalation exposure to benzo[a]pyrene and forestomach tumors, leukemia, and lung tumors from oral exposure to benzo[a]pyrene. We have classified seven PAH compounds (benzo[a]pyrene, benz[a]anthracene, chrysene, benzo[b]fluoranthene, benzo[k]fluoranthene, dibenz[a,h]anthracene, and indeno[1,2,3-cd]pyrene) as Group B2, probable human carcinogens.

Acute (short-term) inhalation exposure of humans to benzene may cause drowsiness, dizziness, headaches, as well as eye, skin, and respiratory tract irritation, and, at high levels, unconsciousness. Chronic (long-term) inhalation exposure has caused various disorders in the blood, including reduced numbers of red blood cells and aplastic anemia in occupational settings. Reproductive effects have been reported for women exposed by inhalation to high levels, and adverse effects on the developing fetus have been observed in animal tests. Increased incidence of leukemia (cancer of the tissues that form white blood cells) has been observed in humans occupationally exposed to benzene. We have classified benzene as a Group A, known human carcinogen.

Acute (short-term) inhalation of toluene by humans may cause effects to the central nervous system (CNS), such as fatigue, sleepiness, headache, and nausea, as well as irregular heartbeat. Adverse CNS effects have been reported in chronic abusers exposed to high levels of toluene. Symptoms include tremors, decreased brain size, involuntary eye movements, and impaired speech, hearing, and vision. Chronic (long-term) inhalation exposure of humans to lower levels of toluene also causes irritation of the upper respiratory tract, eye irritation, sore throat, nausea, dizziness, headaches, and difficulty with sleep. Studies of children whose mothers were exposed to toluene by inhalation of mixed solvents during pregnancy have reported CNS problems, facial and limb abnormalities, and delayed development. However, these effects may not be attributable to toluene alone.

We recognize that the degree of adverse health effects experienced by exposed individuals can range from mild to severe. The extent and degree to which the health effects may be experienced depend on:

- Pollutant-specific characteristics (e.g., toxicity, half-life in the environment, bioaccumulation, and persistence);

- Ambient concentrations observed in the area (e.g., as influenced by emission rates, meteorological conditions, and terrain);
- Frequency and duration of exposures; and
- Characteristics of exposed individuals (e.g., genetics, age, preexisting health conditions, and lifestyle), which vary significantly with the population.

II. Summary of the Proposed Rule

A. What Are the Affected Sources and Emission Points?

The affected source is each new or existing coke oven battery at a coke plant that is a major source of HAP emissions. A new affected source is one constructed or reconstructed after July 3, 2001. An existing affected source is one constructed or reconstructed on or before today's date. The proposed rule covers fugitive pushing emissions, emissions from control devices applied to pushing emissions, and emissions from quenching, soaking, and battery stacks.

B. What Are the Requirements for Pushing?

1. By-product Coke Oven Batteries with Vertical Flues

We are proposing two options for controlling fugitive pushing emissions—numerical opacity limits (Option 1) and work practice standards (Option 2). Based on comments received on the proposed rule, we will promulgate Option 1, Option 2, or a combination of the two options. Under both options, the requirements are the same for new and existing batteries.

Option 1 (the numerical standard) limits the daily average opacity of fugitive pushing emissions to 20 percent for a short battery and 25 percent for a tall battery. A short battery has ovens that are less than five m high, and a tall battery has ovens that are five m high or more. The daily average opacity would be determined from opacity observations made for four consecutive pushes per battery per day. The average opacity per push would be determined by averaging the six highest consecutive observations made at 15-second intervals.

Option 2 (the work practice standard) is based on an opacity trigger for a single push that would require the plant to correct the problem or remove the oven from service. The proposed work practice requirements are:

- Observe and record the opacity of fugitive pushing emissions for four consecutive pushes each day for each battery.
- If the average opacity of the six highest consecutive readings for any individual push is more than the opacity trigger (30 percent for short batteries and 35 percent for tall batteries), take corrective action to fix the problem and demonstrate that the corrective action has been successful within a certain number of days. Plants must calculate the allowed number of days using the equation, (15 pushes $\times$ coking time)/24 hours or 0.63 $\times$ coking time. The corrective action would be considered successful if neither of the opacity observations for two consecutive daytime pushes exceed the opacity trigger.
- If the oven-directed procedure has not been successful within the allowable number of days, remove the oven from service until repairs are completed. Observe two daytime pushes within the first four pushes after the oven is returned to service. If neither push exceeds the opacity trigger, the corrective action was successful and the oven may be taken out of the oven-directed program. If the opacity trigger was exceeded for either push, the oven must be removed from service and the process repeated. If any oven is removed from service more than four times in any semiannual reporting period as a result of exceeding the opacity trigger, the oven must not be returned to service without the permission of the permitting authority. Plants would also be required to mitigate possible adverse effects on adjacent ovens due to removing the oven from service.
- If extended coking is the corrective action, keep the oven on extended coking until the problem is corrected and the plant demonstrates the corrective action has been successful.

Under Option 1, plants would be required to conduct a performance test to demonstrate initial compliance with the applicable opacity limit. In the test, an independent certified observer would make opacity observations according to the procedures in EPA Method 9 (40 CFR part 60, appendix A) for four consecutive pushes, calculated from the six highest 15-second readings for each push. No performance test would be required to demonstrate initial compliance with the work practice standards in Option 2. The plant owner or operator would certify, as part of the notification of compliance status, that the facility will meet each of the requirements in the work practice standard.

Under Options 1 and 2, continuous compliance would be demonstrated by opacity observations. Both options allow two batteries to be treated as a single battery if they are served by the same pushing equipment and contain a total of no more than 60 ovens. An independent certified observer would determine the daily average opacity from four consecutive pushes for each battery every day and for each oven in a battery at least every 3 months. The proposed rule prohibits plants from altering an oven's pushing schedule to change the sequence of pushes designated for observation.

Records of all observations and calculations needed to document compliance would be required for Options 1 and 2. Additional records would be required under Option 2 if the opacity trigger is exceeded.

2. By-Product Coke Oven Batteries with Horizontal Flues

Under the work practice standards, plants would be required to operate each battery according to a written plan designed to prevent green pushes. The plan would establish minimum flue temperatures at different coking times and a lowest acceptable minimum flue temperature consistent with the prevention of green pushes. Provisions are included in the proposed rule for performing a study to determine the minimum flue temperatures. After developing a plan, plants would be required to:

- Measure and record the temperature of all flues on two ovens per day for each battery within 2 hours of the scheduled pushing time. Two batteries can be treated as one if both are served by the same pushing equipment and contain a total of no more than 60 ovens.
- Measure and record the temperature of all flues on each oven at least once a month.
- Determine and record the time each oven is charged and pushed and the net coking time for each oven.
- If the measured flue temperature is below the minimum flue temperature for that coking time, extend the coking time for the oven by the amount specified in the plan for that flue temperature before pushing the oven and take corrective action. While the oven is on extended coking, continue to measure the flue temperatures within 2 hours of the scheduled pushing time until the measurements prior to two consecutive pushes meet the minimum temperature requirements for the extended coking time. An oven could be returned to the battery's general pushing schedule once the heating problem is corrected.
- Remove the oven from service for repairs if any flue temperature measurement is below the lowest acceptable minimum temperature. After

repairing the oven, follow the procedures in the written plan for returning the oven to service after the repairs are complete. Plants also must take temperature measurements within 2 hours of the scheduled pushing time. If any flue temperature measurement is below the minimum flue temperature in the plan, plants would repeat the procedures for extended coking.

No performance test would be required to demonstrate initial compliance with the work practice standards. The plant owner or operator would certify, as part of the notification of compliance status, that the facility has submitted the written plan to prevent green pushes and the supporting study to their permitting authority for review and approval, and that the plant will meet each of the requirements in the work practice standard.

Continuous compliance would be demonstrated by: (1) Measuring and recording flue temperature measurements for two ovens a day for each battery and for all ovens in each battery at least once a month, and (2) recording the time each oven is charged and pushed with the net coking time. Additional records would be required to show that the correct procedures were followed if any measured flue temperature is below the minimum flue temperature or the lowest acceptable minimum temperature.

3. Non-Recovery Coke Oven Batteries

The proposed work practice standards require plants to visually inspect each oven prior to pushing by opening the door damper and observing the bed of coke. The oven cannot be pushed unless the visual inspection confirms that there is no smoke in the open space above the coke bed, and that there is an unobstructed view of the door on the opposite side of the oven. Plants would demonstrate initial compliance by certifying in their initial notification of compliance status that they will follow the work practice standards. Continuous compliance would be demonstrated by maintaining records of each visual inspection.

4. Control Devices

We are proposing emission limits for particulate matter (PM) as a measure of control device performance. Facilities that currently use capture and control equipment must continue to use such equipment and must meet the applicable emission limitations. The proposed PM limits for a control device applied to pushing emissions from a coke oven battery are:

- 0.004 grain per dry standard cubic foot (gr/dscf) where a cokeside shed is used as the capture system.
- 0.017 pound per ton (lb/ton) of coke if a moveable hood vented to a stationary control device is used to capture emissions.
- If a mobile scrubber car that does not capture emissions during travel is used, 0.023 lb/ton of coke for a short coke oven battery or 0.010 lb/ton of coke for a tall coke oven battery.
- 0.039 lb/ton of coke if a mobile scrubber car that does capture emissions during travel is used.

Operating limits are also proposed for control devices and capture systems applied to pushing emissions. If a baghouse is used, the alarm on the bag leak detection system must not sound for more than 5 percent of the total operating time in a semiannual reporting period. If a venturi scrubber is used, the daily average pressure drop and scrubber water flow rate must remain at or above the minimum level established during the initial performance test. Two options are proposed for a capture system applied to pushing emissions: (1) Maintain the fan motor amperes at or above the minimum level established during the initial performance test, or (2) maintain the volumetric flow rate at the inlet of the control device at or above the minimum level established during the initial performance test.

The proposed rule requires a performance test for each control device to demonstrate it meets the emission limit. The concentration of PM would be measured using EPA Method 5 or 5D in 40 CFR part 60, appendix A. The proposed testing requirements also include procedures for establishing operating limits for venturi scrubbers and capture systems and for revising the limits, if needed, after the performance test. To demonstrate continuous compliance with the applicable emission limit, plants would be required to conduct performance tests for each control device at least twice during each term of their title V operating permit (at midterm and renewal).

If a baghouse is applied to pushing emissions, plants would monitor the relative change in PM loading using a bag leak detection system and make inspections at specified intervals. The basic inspection requirements include daily, weekly, monthly, or quarterly inspections of specified parameters or mechanisms with monitoring of bag cleaning cycles by an appropriate method. Each bag leak detection system must:

- Be capable of detecting PM at concentrations of 10 milligrams per actual cubic meter or less and provide an output of relative PM loading;
- Be installed and operated according to our guidance (''Fabric Filter Bag Leak Detection Guidance,'' EPA 454/R–98–015, September 1997, available on the TTN at *http://www.epa.gov/ttnemc01/cem/tribo.pdf*). If the system does not work based on the triboelectric effect, it must be installed and operated consistent with the manufacturer's written specifications and recommendations; and
- Be equipped with an alarm system that: (1) Will alert operators if PM is detected above a preset level, and (2) has a sensitivity that is never increased by more than 100 percent or decreased by more than 50 percent over a 1-year period, unless a responsible official certifies, in writing, that the baghouse has been inspected and found to be in good operating condition.

To demonstrate continuous compliance with the operating limit, plants would be required to maintain each baghouse such that the operating limit is not exceeded and keep records of bag leak detection system alarms. They also would be required to keep records documenting conformance with the inspection and maintenance requirements.

If a venturi scrubber is applied to pushing emissions, plants would monitor the daily average pressure drop and scrubber water flow rate using continuous parameter monitoring systems (CPMS). The CPMS would measure and record the pressure drop and scrubber water flow rate at least once per push and determine and record the daily average of the readings. To demonstrate continuous compliance with the operating limits, plants would maintain the daily average pressure drop and scrubber water flow rate at levels no lower than those established during the performance test. Valid monitoring data must be available for all pushes. In addition, plants must keep records documenting compliance with the proposed installation, operation, and maintenance requirements for the CPMS.

For a capture system applied to pushing emissions, plants would be required to check the fan motor amperes or the volumetric flow rate at least once each 8-hour period to verify it is at or above the level established during the initial performance test and to record the results of each check.

C. What Are the Requirements for Soaking?

A work practice standard is proposed for emissions that occur when the oven is prepared for pushing by venting the oven to the atmosphere (soaking). If the gases from the standpipe do not ignite automatically, plants would be required to manually ignite the gases within 3 minutes after opening the standpipe cap.

To demonstrate initial compliance, the owner or operator would certify, in the notification of compliance status, that the work practice requirements will be met. To demonstrate continuous compliance, plants would keep records documenting the automatic or manual ignition of vented gases from each standpipe. If the gases do not ignite automatically, the records would include the time the standpipe cap is opened and the time the gases are manually ignited.

D. What Are the Requirements for Quenching?

The proposed equipment and work practice standards for quenching apply to all coke oven batteries. Plants would be required to equip each quench tower with baffles that cover at least 95 percent of the cross-sectional area, clean the baffles daily, and inspect each quench tower at least monthly for damaged or missing baffles and blockage. If the monthly inspection reveals any damaged or missing baffles, plants must repair or replace them within 1 month (i.e., before the next inspection). The proposed rule also requires plants to use clean water as makeup water.

To demonstrate initial compliance, the plant owner or operator would certify, as part of the notification of compliance status, that the equipment standard has been met and the work practice requirements will be met. To demonstrate continuous compliance, plants would be required to maintain baffles in each quench tower to meet the rule requirements and keep records documenting conformance with the work practice requirements.

E. What Are the Requirements for Battery Stacks?

The proposed opacity standards apply to all coke oven by-product batteries. The proposed rule requires plants to monitor the opacity exiting each battery stack using a continuous opacity monitoring system (COMS).

The proposed opacity limits are a daily average of 15 percent for a by-product coke oven battery on a normal coking cycle and a daily average of 20 percent for a by-product coke oven battery on battery-wide extended coking.

The proposed rule requires a performance test to demonstrate initial compliance with the applicable opacity limit. Using a COMS, plants would measure the opacity of emissions from each battery stack for 24 hours and determine the daily average. A performance evaluation is also required to show that the COMS meets Performance Specification 1 in appendix B to 40 CFR part 60.

To demonstrate continuous compliance, plants would monitor opacity using the COMS and would determine and record the 24-hour average opacity of all recorded 6-minute measurements. Other operational requirements are based on requirements in the 40 CFR part 63 General Provisions. Monthly compliance reports would also be required.

F. What Are the Operation and Maintenance Requirements?

All plants subject to the proposed rule would be required to prepare and implement a written startup, shutdown, and malfunction plan according to the operation and maintenance requirements in 40 CFR 63.6(e). Operation and maintenance plans would also be required for: (1) By-product coke oven batteries, and (2) capture systems and control devices applied to pushing emissions from any coke oven battery.

The plan for general operation and maintenance of each by-product coke oven battery would cover:

- Frequency and method of recording underfiring gas parameters and battery operating temperature;
- Procedures to prevent pushing an oven out of sequence, pushing prematurely, and undercharging or overcharging; and
- Frequency and method for inspecting flues, burners, and nozzles.

The operation and maintenance plan for capture systems and control devices applied to pushing emissions would describe procedures for monthly inspections of capture systems, preventative maintenance requirements for control devices, and corrective actions requirements for baghouses. In the event of a bag leak detection system alarm, the plan must include specific requirements for initiating corrective action to determine the cause of the problem within 1 hour, initiating corrective action to fix the problem within 1 working day, and completing all corrective actions needed to fix the problem as soon as practicable.

To demonstrate initial compliance, plants would certify in their notification of compliance status that they have prepared the plans according to the rule requirements. To demonstrate continuous compliance, plants must adhere to the requirements in the plan and keep records documenting conformance with these requirements.

G. What Are the Notification, Recordkeeping, and Reporting Requirements?

The proposed notification, recordkeeping, and reporting requirements rely on the NESHAP General Provisions in 40 CFR part 63, subpart A. Table 1 to proposed subpart CCCCC shows each of the requirements in the General Provisions (§§ 63.2 through 63.15) and whether they apply.

The proposed rule requires the owner or operator to submit each initial notification in the NESHAP General Provisions that applies to them. An initial notification of applicability with general information about the facility must be submitted within 120 days of the effective date of the final rule (or for a new affected source, 120 days after becoming subject to the rule). A notification of performance tests must be provided at least 60 calendar days before each test. A notification of compliance status must be submitted within 60 calendar days of the compliance demonstration if a performance test is required or within 30 calendar days if no performance test is required. Other notification requirements that may apply are shown in Table 1 to subpart CCCCC.

The proposed rule requires plants to maintain the records required by the NESHAP General Provisions that are needed to document compliance, such as performance test results; copies of startup, shutdown, and malfunction plans and associated corrective action records; monitoring data; and inspection records. Except for the operation and maintenance plans for by-product batteries, capture systems, and control devices, all records must be kept for a total of 5 years, with the records from the most recent 2 years kept onsite. The proposed rule requires that both operation and maintenance plans be kept onsite and available for inspection upon request for the life of the affected source or until the affected source is no longer subject to the rule requirements.

Plants would make monthly reports of any deviation from the emission limits for battery stacks. For other affected sources, semiannual reports would be required for any deviation from an emission limitation (including an operating limit), work practice standard,

or operation and maintenance requirement. Each report would be due no later than 30 days after the end of the reporting period. If no deviation occurred and no continuous monitoring systems were out of control, only a summary report would be required. If a deviation did occur, more detailed information would be required.

An immediate report would be required if there were actions taken during a startup, shutdown, or malfunction that were not consistent with the startup, shutdown, and malfunction plan. Deviations that occur during a period of startup, shutdown, or malfunction are not violations if the owner or operator demonstrates to the authority with delegation for enforcement that the source was operating in accordance with the startup, shutdown, and malfunction plan.

H. What Are the Compliance Deadlines?

The owner or operator of an existing affected source would have to comply within 24 months of the effective date of the final rule. New or reconstructed sources that startup on or before the effective date of the final rule must comply by the effective date. New or reconstructed sources that startup after the effective date must comply upon initial startup.

III. Rationale for Selecting the Proposed Standards

A. How Did We Select the Affected Source?

Affected source means the collection of equipment and processes in the source category or subcategory to which the emission limitations, work practice standards, and other regulatory requirements apply. The affected source may be the same collection of equipment and processes as the source category or it may be a subset of the source category. For each rule, we must decide which individual pieces of equipment and processes warrant separate standards in the context of the CAA section 112 requirements and the industry operating practices.

We considered three different approaches for designating the affected source: The entire coke plant, groups of emission points, and individual emission points. We did not designate the entire coke plant as the affected source because this broad approach would require us to establish the MACT floor by the total HAP emissions indicative of best-performing facilities. Applying a single MACT floor to groups of processes and fugitive emission points would be impracticable.

We concluded that designating the group of emission points associated with the coke oven battery as the affected source is the most appropriate approach. The battery is the basic operating unit for the emission points covered under the proposed rule, and the overall condition and operation of the battery has a direct effect on emissions from pushing, quenching, and battery stacks. This is also consistent with previous State and Federal rules for cokemaking operations.

In selecting the coke oven battery as the affected source for regulation, we identified the HAP-emitting operations, the HAP emitted, and the quantity of HAP emissions from the individual or groups of emission points. As a result, the proposed rule includes emission limits or standards for the control of emissions from pushing, soaking, quenching, and battery stacks.

B. How Did We Select the Pollutants?

Coke oven emissions are the dominant HAP emitted from pushing, soaking, quenching, and battery stacks. We decided to establish standards for opacity as a surrogate for coke oven emissions from pushing and battery stacks. For control devices applied to pushing emissions, we established standards for PM as a measure of the level of performance of the equipment.

Opacity limits have traditionally been used in State and Federal standards because of the strong correlation to PM. In addition, there is no practical way to capture and measure all of the specific HAP compounds in fugitive pushing emissions. Standards for opacity also limit coke oven emissions, and opacity provides a measure of battery performance in terms of minimizing the frequency of green pushes.

For control devices applied to pushing emissions, PM standards provide a meaningful measure of the device's level of performance, and PM is easily measured using EPA reference methods. The technologies that control PM achieve comparable levels of performance for coke oven emissions. Therefore, good control of PM will also generally achieve good control of coke oven emissions.

C. How Did We Determine the Bases and Levels of the Proposed Standards?

Pushing From By-Product Batteries with Vertical Flues

Coke oven emissions occur during pushing from incomplete coking, which results in a ''green'' push. Green pushes can be caused by overcharging an oven, cold flues due to plugging or poor combustion, non-uniform heating, and cold spots on the ends of ovens. Emissions from green pushes range from moderate (relatively small amounts of green coke) to severe (large amounts of green coke). Green pushes generate voluminous plumes of emissions that can overwhelm the capture systems which are used to control the comparatively small amounts of PM emissions during ordinary operation. Consequently, capture and control systems used for PM emissions from pushing are only marginally more effective, for example, no more than 10 percent for movable hoods on severely green pushes.

The most effective measures for purposes of reducing HAP emissions from pushing are to: (1) minimize the frequency of green pushes by implementing a preventative maintenance program for the battery, and (2) implement work practices that include diagnostic procedures to identify the cause of green pushes and to trigger corrective actions to prevent recurrence. Batteries that have implemented these procedures on a continuing basis have few green pushes and, thus, substantially lower levels of HAP emissions. Once such measures have been implemented, the remaining HAP benefits of capture and control are substantially lessened.

State and local regulations limit opacity from batteries during pushing using different formats. One of the most common formats is the average opacity of four pushes determined from the six highest consecutive opacity readings taken at 15-second intervals. This format is consistent with Method 9 in appendix A to 40 CFR part 60. Other batteries have opacity limits based on a single push, and some have limits based on any instantaneous opacity observation.

We obtained opacity data for pushing from State agencies and several coke plants with vertical flues. Although the data are in different formats, we were able to use the data to identify batteries that are low emitters and have only infrequent green pushes. We gathered additional opacity data from the low-emitting batteries that we had identified. An important part of the data collection effort was to use a consistent methodology for the opacity observations to allow us to compile all of the data on a uniform basis. The data were collected using EPA Method 9 and analyzed based on the six highest consecutive 15-second readings per push. Observations were made from the time coke began to fall from the oven until the quench car entered the quench tower.

We analyzed data from 15 well-controlled batteries at eight coke plants. The batteries have different combinations of oven height and type of underfiring systems. Eight are four-meter gun flue batteries, three are four-meter underjet batteries, and four are six-meter underjet batteries. The number of pushes observed for each battery ranges from 45 to 1,539 with a total of 3,630 data points. We examined the frequency of high opacity pushes and concluded that this group of batteries represents good performance in terms of minimizing green pushes. For example, the average opacity per push never exceeds 30 percent for nine of the short batteries, and the other two short batteries exceed 30 percent only once. Two of the tall batteries never exceed 35 percent, and the other two exceed it only once.

In general, the opacities during pushing for tall batteries are higher than those for short batteries. This is due to the longer flame height needed in tall batteries that makes uniform heating more difficult. In addition, the greater height of fall of the coke from a tall oven can result in more visible emissions. Consequently, we developed separate subcategories for short and tall batteries. We also examined underfiring systems and found no difference in the performance of gun flue and underjet systems.

We investigated the technology used at these good performing batteries to minimize the frequency of green pushes. This information was collected from site visits, discussions with industry experts, a survey of industry practices, and publications. There are two important components of the technology—routine operation and maintenance procedures for the general battery and a work practice program for green pushes.

A good operation and maintenance program includes several elements that help prevent green pushes. These include checking coal properties (bulk density and moisture) to prevent overcharging an oven or undercoking wet coal, checking flue temperatures and cleaning flues and burners to avoid cold flues, documenting coking time and following the pushing schedule to avoid pushing an oven early, and operating the underfiring system properly to ensure complete coking. When a green push occurs, diligent work practices are initiated to identify the cause of the green push and to take corrective actions to fix the problem. Corrective actions may include cleaning blocked flues or burners, placing an oven on an extended coking time, or repairing a damaged oven.

We conclude that batteries that are implementing this technology are successful in minimizing the frequency of green pushes. Furthermore, because at least 15 of 58 batteries (more than 12 percent) use these procedures, we conclude that this is the floor technology for fugitive emissions from pushing.

We also examined opportunities for a level of control beyond the floor. It is our opinion that capture and control systems applied to pushing emissions do not contribute materially to the control of HAP emissions from green pushes. Consequently, we conclude that the floor, which is based on the technology for minimizing the frequency of green pushes, represents MACT for new and existing sources.

We are proposing two distinct options for the implementation of standards and other requirements for pushing. One is an opacity standard, and the other is a work practice standard.[1] We are considering an opacity limit because most State regulations include opacity limits. We are considering a work practice standard because we believe that it may provide a more effective means of ensuring that proper corrective action is taken to avoid green pushes. We request comments on the two options. After consideration of comments on these options, we will promulgate one of these options or a combination of the two options.

The format for the proposed opacity limit is the average opacity of four consecutive pushes (based on the six highest consecutive 15-second observations during each push) using Method 9 in 40 CFR part 60, appendix A. This format can accommodate an occasional (unavoidable) green push if the other pushes are well controlled, and it is consistent with the 6-minute average (24 observations) typically used for Method 9.

We analyzed our database described earlier based on the averages of four pushes. For short batteries, more than 99 percent of the averages of four pushes are less than 20 percent opacity. For tall batteries, more than 99 percent of the averages of four pushes are less than 25 percent. The database shows that these opacities have been achieved by batteries using MACT, and these opacities are used as the standard for the opacity limit option.

We also considered an opacity limit based on a 30-day rolling average. However, a 30-day rolling average does not provide a good distinction between well-controlled and poorly-controlled batteries, and it is not effective in achieving our goal of minimizing green pushes.

The proposed work practice standard has an opacity level per push that triggers diagnostic procedures and corrective actions when exceeded. We chose the average opacity per push rather than averaging over multiple pushes because the goal of the work practice standard is to identify a problem oven that produces a green push. Once a problem oven is identified, diagnostic procedures to determine the cause are initiated and corrective actions are taken to fix the problem.

We analyzed our data for the group of well-controlled batteries previously described based on the average opacity per push to characterize the frequency of green pushes. We examined potential trigger levels of 20, 25, 30, and 35 percent. The batteries that were well-controlled have several pushes that exceed 20 and 25 percent, and we do not believe that these opacities represent a green push. However, opacities of 30 and 35 percent occur when there are high individual opacity readings characteristic of green coke. In addition, these opacities are seldom exceeded by well-controlled batteries. Nine of the short batteries do not exceed 30 percent opacity, and the other two exceed 30 percent only once. Similarly, two of the four tall batteries do not exceed 35 percent opacity, while the other two exceed 35 percent once. Consequently, we selected opacity triggers of 30 percent for short batteries and 35 percent for tall batteries. These levels are appropriate as a trigger to identify a problem oven and to initiate corrective actions.

We also considered what amount of time would be appropriate to investigate the cause of a green push, perform repairs or corrective actions, and demonstrate that the problem has been corrected. We decided that the time limit should be based on a number of pushes to compensate for differences in coking time for furnace and foundry coke batteries. We believe 15 pushes is a reasonable estimate of the maximum time required after considering that about half of the pushes can occur at night when it is more difficult to assess greenness and impossible to perform Method 9 observations. We transformed the estimate of 15 pushes to a number of days to be calculated from the battery's coking time (15 pushes × coking time in hours/24 hours = 0.63 × coking time).

[1] CAA section 112(h) allows the establishment of work practice standards in lieu of emission standards when pollutant specific emission standards are not feasible (such as in the case of fugitive pushing emissions when they are not captured and confined in a conveyance).

We selected EPA Method 9 in 40 CFR part 60, appendix A, for opacity observations to be consistent with the test data used to develop the proposed standard. We chose initial compliance provisions that would use this method for both the emission limit option (Option 1) and the work practice standard (Option 2). For the emission limit option, four consecutive pushes must be observed using EPA Method 9. Initial compliance is demonstrated if the average for the four pushes is below the limit.

For the work practice option, initial compliance is demonstrated through observation of the four requisite pushes. If any push exceeds its opacity trigger, the oven-directed procedures must be implemented to demonstrate initial compliance.

Daily vigilance is required to prevent green pushes and to take corrective actions when they occur. Consequently, we conclude that daily inspection of four consecutive pushes per battery would be needed to demonstrate continuous compliance and to ensure that green pushes were identified. Compliance with the opacity limit option must be determined daily.

The work practice option also requires the daily inspection of four consecutive pushes per battery to demonstrate continuous compliance. If the opacity trigger is exceeded for any push, continuous compliance must be demonstrated by diagnosing the cause of the problem, assigning the problem oven to the oven-directed program, taking appropriate corrective actions, and demonstrating that the problem has been corrected by two subsequent opacity observations that are below the trigger.

• Pushing From By-product Batteries With Horizontal Flues

The vast majority of by-product batteries in the U.S. have vertical flues (56 out of 58 batteries). Two batteries in Holt, AL, however, have horizontal flues that materially affect pushing emissions and possible approaches to regulation. Both are Semet Solvay batteries with an antiquated design built in the early 1900's. Battery 1 was built in 1903 and is comprised of 40 ovens, and Battery 2 was built in 1913 and has 20 ovens. We are establishing a subcategory for batteries with horizontal flues because of unique physical and operational differences from vertical flue batteries.

Unlike vertical flue batteries which include 25 to 37 individual flues along each oven wall, the flue system of the Semet Solvay design includes only five horizontal flues which convey the combustion gases from top to bottom in serpentine fashion. Because the hot combustion products flow from one flue to the next, the heat control of each upper flue materially affects the heating conditions in the next flue down. Each flue in the horizontal design affects a larger percentage of the total coke mass than for the vertical flue design. Consequently, the occurrence of a heating or combustion problem in any of the single horizontal flues could have a significant adverse effect on the degree and uniformity of coking across the entire length of the coke bed.

As with other types of coke oven batteries, the primary source of HAP emissions from batteries with horizontal flues is the occurrence of green pushes. To develop MACT for batteries with horizontal flues, we visited the plant and held discussions with plant personnel to learn more about their operation and how the production of green coke could be minimized. Both existing batteries currently use a combination of coking time and flue temperature controls and routine operation and maintenance to control HAP emissions. The most important factor affecting the production of green coke is a combination of coking time and flue temperature. If the flue temperature is too low at a given coking time, green coke will be produced. Consequently, we find that monitoring flue temperatures and coking time and taking corrective actions if the temperature is too low is the MACT floor for batteries with horizontal flues. Temperature measurements are made prior to the push, and if a low temperature is detected, the coking time is extended to prevent a green push. Routine operation and maintenance include monitoring underfiring gas parameters and adjusting as necessary; implementing procedures to avoid pushing out of sequence, pushing prematurely, or overcharging an oven; and routine inspection of flues, burners, and nozzles. We know of no practical approach to setting an emission limitation that could be feasibly implemented or enforced that would result with the same degree of assurance in emission reductions to that achieved by these work practices. Consequently, these work practices are also the MACT floor for new units.

We are proposing a work practice standard for batteries with horizontal flues. The standard implements MACT by requiring that the temperature of all of the flues on two ovens in each battery be measured each day, and that the temperature of all flues in each oven must be measured at least once per month. The plant must perform a study to establish minimum flue temperatures to prevent green pushes, and the results must be documented in a plan that is submitted for approval to the applicable permitting authority. The study must include consideration of different means for determining the minimum flue temperatures, such as the percent volatile matter in the coke, the color of emissions, the density and duration of emissions, and whether emissions continue during quench car travel. The study must also establish the time and lowest acceptable minimum temperature correlation for which extended coking can be used. This minimum represents the lowest temperature at which coal can reasonably be expected to be fully coked no matter how long the coking time is. If flue temperatures fall below this minimum, the oven must not be charged with coal again until the problem is corrected.

If the flue temperatures are less than the established minimum for the oven's coking time, the coking time of the oven must be extended by an amount prescribed in the plan prior to pushing to prevent a green push. Oven-directed procedures must be used to find the cause of the low temperature and to correct the problem. The flue temperatures must be measured on any oven placed on extended coking prior to the next two consecutive pushes to ensure that the problem has not worsened. If any flue temperature is below the lowest minimum for complete coking established in the plan, the oven must be removed from service.

We developed initial compliance provisions that are consistent with the work practice standard. We require that the work practice plan and supporting documentation be submitted to the applicable permitting authority for review and approval. As part of a plant's notification of compliance status, we require a signed statement certifying that the flue temperatures of two ovens will be measured each day, and the flue temperatures on all ovens will be measured at least once per month.

Daily vigilance is required to prevent green pushes and to take corrective action when they occur. Consequently, we conclude that daily measurements of the flue temperatures of two ovens per battery would be needed to demonstrate continuous compliance. In addition, temperature measurements must be made on each oven at least once per month. We require that a plant keep all necessary records documenting conformance with the work practice plan and that the records be made available to the permitting authority upon request.

• Pushing From Non-recovery Batteries

Non-recovery coke oven batteries differ from by-product coke oven batteries both physically and operationally. Physically, the ovens that comprise non-recovery batteries are horizontal in configuration (short and wide) unlike the vertically configured slot ovens (tall and narrow) used in the by-product recovery design. In addition, non-recovery batteries have no underfiring systems and do not burn clean coke oven gas for heating. Rather, non-recovery batteries are heated by the complete combustion of the raw gases evolved during the coking process in the free space above the coke bed and in flues in the oven walls and floors.

The principal difference operationally is that the non-recovery batteries are maintained at all times under negative pressure rather than positive pressure. This results in the virtual elimination of door leaks and, relative to limiting pushing emissions, allows for the visual inspection of the coke mass throughout the coking cycle including just prior to pushing. If the coal is not fully coked, the coking time can be extended to avoid a green push. In addition, PM emissions are lower from non-recovery ovens because the height of fall of the coke mass is about 50 percent less than that of by-product ovens. Based on these dissimilarities and their effect on emissions, we conclude that it is appropriate to establish separate requirements for non-recovery batteries.

There are two non-recovery coke plants in the U.S., one in Vansant, VA with six batteries and another in East Chicago, IN with four batteries. Both plants have cokeside sheds. At the Vansant plant, the sheds act as large settling chambers with no ventilation. The four East Chicago batteries are equipped with sheds that are ventilated along the entire length of the battery to baghouses for particulate control.

The MACT floor for non-recovery batteries is based on the control measures used at both plants to prevent green pushes. Prior to each push, a small door (oven damper) on the oven is opened, and the bed of coke is observed to determine whether it is fully coked. This is possible because the oven configuration provides an unobstructed view of the free space across the entire length of the coke bed. If the oven is not fully coked (as indicated by smoke or an obstructed view of the opposite side of the oven), the coking time is extended, and the oven is not pushed until coking is reasonably complete. We believe that this pollution prevention control measure provides the most effective demonstrated approach to reducing, if not virtually eliminating green pushes. Therefore, we conclude that the inspection of each oven prior to pushing, coupled with extended coking if needed, constitutes the floor technology for both new and existing non-recovery coke oven batteries. We know of no practical approach to setting an emission limitation that could be feasibly implemented or enforced that would result with the same degree of assurance in emission reductions to that achieved with a work practice standard.

To implement MACT, we selected a work practice standard to minimize the frequency of green pushes that requires use of the control measures associated with the MACT floor. Specifically, each oven must be inspected prior to each push, and ovens may be pushed only if there is no smoke in the open space above the coke bed and there is an unobstructed view of the door on the opposite side of the oven. If these conditions do not exist (indicating incomplete coking), the coking time must be extended.

We developed initial compliance provisions that are consistent with the work practice standard. As part of a plant's notification of compliance status, we require a signed statement certifying that each oven will be inspected prior to pushing and that the oven will be pushed only if coking is complete.

We developed continuous compliance provisions to ensure that plants keep all necessary records verifying that each oven is inspected prior to pushing, and that ovens are pushed only if coking is complete. We require that records be made available to the permitting authority upon request.

• Capture and Control Systems

In addition to good operating and maintenance practices to prevent green pushes, most batteries are equipped with capture and control systems for routine PM emissions from pushing. There are 30 control devices applied to pushing emissions at 56 coke oven batteries, and there are three combinations of capture and control systems used. The most common capture system is a moveable hood. There are 19 moveable hood systems. Sixteen moveable hood systems serving 30 batteries are vented to a baghouse, and three systems serving four batteries are vented to a venturi scrubber. There are 15 batteries equipped with cokeside sheds that enclose the entire length of the battery and are served by six baghouses. There are six batteries equipped with cokeside sheds that serve as settling chambers and are not ventilated. Seven batteries are equipped with mobile scrubber cars which transport venturi scrubbers. Six batteries do not have capture and control systems.

Most of these capture and control systems were installed as a result of State implementation plan requirements to limit PM emissions in nonattainment areas. Most HAP emissions from pushing occur as a result of pushing moderately green to severely green coke. During such an event, capture systems designed and installed primarily to address routine PM emissions from non-green pushes are typically overwhelmed. Visual observations indicate that the capture efficiency during a moderately to severely green push is poor with significant amounts of fume and smoke escaping capture both during the actual push and during quench car travel. The only control measure that has been demonstrated to be effective at mitigating these emissions is eliminating or minimizing the frequency of green pushes.

While it is reasonable to expect that the current use of capture and control systems for purposes of reducing PM emissions also results in some HAP emission benefits, we do not have sufficient data regarding capture effectiveness to quantify these benefits. However, any HAP emission benefits from the use of capture and control equipment must result primarily from the reduction of emissions during moderately to severely green pushes (when significant amounts of HAP emissions typically occur). Accordingly, any HAP emission benefits of capture and control systems are rendered less significant (and less certain) by the adoption of requirements aimed at eliminating or minimizing the frequency of green pushes. That is, when a coke mixture is fully coked (i.e., in the absence of green pushes) there are very little HAP emissions during pushing, because most HAP have been removed from the coke mixture and converted to other useful products through a by-product recovery process or combusted in order to provide heat energy for the coking process. Therefore, very little HAP emissions are captured and, overall, there is no significant additional reduction in the emissions of HAP. Consequently, we are unable to identify HAP emission benefits that would be useful for purposes of evaluating the individual or relative performance of different types of capture and control equipment applied to pushing. For these reasons, we do not believe that it is appropriate at this point to include capture and control systems as a

component of the MACT floor for pushing.

Nonetheless, we believe that it is appropriate for owners and operators of coke oven batteries to operate such facilities, at all times, in a manner consistent with good air pollution control practices. We believe that this includes the proper operation of any capture and control systems. Therefore, we believe that it is appropriate for us to establish requirements to ensure proper operation of such systems and to ensure that these control devices perform within reasonable limits wherever such systems are installed. Such operational limitations will help to minimize emissions from coke oven batteries to the level contemplated by the MACT floor, by mitigating the impact of occasional green pushes. Accordingly, it is appropriate for these limits to differ depending on the type of capture system being used.

We believe that the best measure of proper operation for capture and control equipment is emissions performance. Therefore, in order to ensure proper operation of such equipment, we are proposing emission performance requirements for capture and control equipment applied to pushing.

We considered the design and operation of the capture and control systems in developing emission limits. Two important distinctions evident between moveable hoods and cokeside sheds are their method of operation and ventilation rate. Sheds are ventilated at all times while moveable hoods are ventilated only during pushes (about 2 minutes every 10 to 20 minutes). Sheds have much higher ventilation rates (150,000 to 480,000 actual cubic feet per minute (acfm)), and they capture emissions from door leaks as well as pushing. Another difference is that many moveable hood systems mix cooling air with the hot gases from pushing prior to treatment in a baghouse. These differences can have a significant influence on the selection of the format most appropriate for the type of capture and control system regulated.

Most moveable hood systems are subject to existing PM emission limits expressed in lb/ton of coke pushed. This format is more appropriate than a concentration format (gr/dscf) for several reasons. Both pounds emitted and the quantity of coke produced during an EPA Method 5 (40 CFR part 60, appendix A) test run can be determined with reasonable accuracy while sampling over several pushes. These measurements are not dependent on how long the ventilation fan is running before or after the push or the amount of ambient air that is admitted to cool the gases prior to the baghouse. On the other hand, concentration is not a meaningful measure of performance for this type of system because the resulting measurement can be quite variable depending on how the system is operated and when sampling is started and stopped. For example, if the fan runs longer or more cooling air is admitted, the resulting concentration measurement will be lower. Consequently, we selected a lb/ton format as the most appropriate for moveable hood systems that ventilate only during the push.

A concentration format is more appropriate for cokeside sheds than a lb/ton format. Because cokeside sheds ventilate continuously and capture emissions from points other than pushing, performance is much less dependent on the quantity of coke pushed. In this case, concentration can be determined with reasonable accuracy because the ventilation rate is continuous and relatively constant. In addition, concentration has been used in many State and Federal regulations because it has been shown to be one of the best measures of control performance for a baghouse, which is the type of control device used on sheds. For these reasons, we conclude that a concentration format (gr/dscf) is the most appropriate for control devices used on cokeside sheds.

We have source test data for three of the six coke plants that use cokeside sheds and baghouses. The data consist of three individual test runs per baghouse. All three baghouses are similar in design and operation (i.e., pulse jet units with polyester bags, operated at air-to-cloth ratios of 5 to 5.5 acfm/ft_2). The test results for one plant range from 0.001 to 0.004 gr/dscf and average 0.003 gr/dscf. The three runs conducted at another plant range from 0.003 to 0.004 gr/dscf and average 0.004 gr/dscf. Results for the third plant range from 0.002 to 0.003 gr/dscf and average 0.002 gr/dscf. Considering that all three baghouses are designed and operate similarly, the highest three-run average recorded is 0.004 gr/dscf, and no individual test run exceeded 0.004 gr/dscf, we conclude that an appropriate limit for the proposed standard is 0.004 gr/dscf. This limit accounts for variability in the performance of the control technology and represents the level of performance that has been demonstrated to be achievable by these units using the MACT.

As discussed previously, the most common capture and control system for pushing emissions is a moveable hood that is ducted to a stationary (land-based) control device, usually a baghouse. These systems have a hood that is usually moved along the battery by a belt system. During pushing, the moveable hood is connected to a fixed duct that evacuates the gases to the stationary control device. Evacuation rates range from about 100,000 to 150,000 acfm. Some of these systems cool the hot gases from pushing by mixing with ambient air prior to the baghouse.

We have test data on control devices serving 12 of 19 moveable hood systems, 12 are baghouses and one is a land-based venturi scrubber. The baghouses are mostly pulse jet units and operate at air-to-cloth ratios of 5 to 6 acfm/ft_2. The venturi scrubber is a medium to high energy unit, operating at a pressure drop of 50 to 60 inches of water.

The test results for the 12 systems are quite variable from plant to plant and among individual runs at a single plant. Five of the tests averaged less than 0.010 lb/ton, and eight averaged 0.010 to 0.017 lb/ton. The two baghouses with the highest three-run averages averaged 0.016 and 0.017 lb/ton, respectively. Both are pulse jet units that are similar in design and operation to the other baghouses with lower recorded average emissions. Since we are unable to draw any meaningful distinctions between the lower and higher emitting units, we can only conclude that the higher test results represent normal variability under a reasonable worst situation. Therefore, we conclude that a limit of 0.017 lb/ton is appropriate for a standard for a moveable hood vented to a stationary control device, and we have selected this limit for such units.

Mobile scrubber cars are operated at five plants and serve seven batteries. During pushing, the hood is positioned above the quench car, the scrubber car air mover is activated, and the gases are pulled through the scrubber and are subsequently discharged to the atmosphere. Two of the five scrubber cars that serve three batteries have the hood affixed to the mobile scrubber car which is coupled to the quench car. This allows operation and capture both during pushing and travel to the quench tower. The other three scrubber cars serving four batteries have hoods affixed to the coke guide and door machine and cannot travel to the quench tower. Ventilation rates are on the order of 40,000 to 70,000 acfm. These rates are about half those used for the moveable hoods with land-based controls.

We have test data for all five mobile scrubber cars. The test data indicate that emissions, expressed in lb/ton of coke, are affected by both oven size, and whether emissions are captured only

during pushing or during pushing and travel. The test data indicate that mass rate (lbs/hr) emissions are not affected materially by oven size. However, since six-meter batteries produce about twice as much coke per oven as do smaller four-meter batteries, emissions, adjusted for production, must of necessity be substantially lower for tall batteries than for short batteries.

When emissions are captured during pushing and travel as opposed to pushing only, the scrubber operates on average about 1.5 to 2 minutes longer than for pushing only (about 1.5 minutes). Operating capture and control equipment for a longer time will result in more PM collected per pushing event and thus, of necessity, result in a higher value in the lb/ton format for pushing and travel versus pushing only. Consequently, we are developing emission limits for mobile scrubber cars to accommodate three variations that affect emissions: Tall batteries, short batteries, and batteries that capture during both pushing and travel.

We have data from five tests of two identical scrubber cars that serve two six-meter batteries at the Gary, IN plant. These five tests include three runs each and were conducted over a 15-year period spanning 1982 to 1997. The three-run averages range from 0.002 to 0.010 lb/ton. The average value is 0.005 lb/ton. Considering the variability in three-run averages, we conclude that an appropriate limit for tall batteries with mobile scrubber cars, as evidenced by the test data obtained for the Gary plant, is 0.010 lb/ton which is the highest three-run average recorded.

We have data from three tests of a scrubber car that does not capture during travel and serves two short batteries at a plant in Erie, PA. These three tests are comprised of two runs per test and span 3 recent years. The two-run averages are 0.015, 0.017, and 0.023 lb/ton. Given that we have no basis to conclude that the variation shown in these results represents anything other than normal variability, we conclude that an appropriate limit for short batteries with mobile scrubber cars is 0.023 lb/ton. This limit has been demonstrated achievable during three separate tests over a 3-year period.

We have data for three batteries served by two scrubber cars that capture and control emissions during both pushing and travel at plants in Warren, OH and Granite City, IL. Two tests at one battery averaged 0.011 to 0.026 lb/ton, and three tests conducted on a scrubber car serving two batteries averaged 0.026 to 0.039 lb/ton. These scrubber cars are similar in design and operation, and both capture emissions during travel to the quench tower. Considering the similarity in operation of the scrubber cars and the variability in three-run averages, we conclude that an appropriate limit for mobile scrubber cars that also capture and control emissions during travel is 0.039 lb/ton. This limit has been achieved during five tests conducted at three batteries over a 20-year period.

We chose initial compliance provisions that require EPA Method 5 in 40 CFR part 60, appendix A, to determine compliance. Operating limits for scrubbers (pressure drop and scrubber water flow rate) and capture systems (volumetric flow rate or fan amperes) must be established during the initial compliance test. The pressure drop and water flow rate for scrubbers must be measured at least once per push during each run of the initial compliance test and averaged across each run. The operating limits are the lowest average values during any run that meets the applicable emission limit. The volumetric flow rate or fan amperes must be recorded for each push during each run of the initial compliance test. The operating limit is the second lowest value recorded during any run that meets the applicable emission limit.

To demonstrate continuous compliance with the emission limit, we require PM tests no less frequently than twice (at mid-term and renewal) during each term of the title V operating permit. We believe this frequency is appropriate because we are requiring continuous or periodic monitoring of capture and control systems to ensure they are operating properly. For baghouses, we chose continuous monitoring by a bag leak detector to ensure that corrective actions are taken when a leak occurs. The alarm must not sound for more than five percent of the operating hours in a semiannual reporting period. For scrubbers, we require that the pressure drop and scrubber water flow rate be monitored during each push to ensure that they are within the operating limit established during the initial performance test. The volumetric flow rate or fan amperes must be checked every 8 hours to ensure the capture system continues to operate as it did during the initial performance test.

- Soaking

Emissions from soaking are most pronounced when green coke is produced. Consequently, the technology for fugitive pushing emissions that minimizes the frequency of green coke will also reduce emissions from soaking. However, most batteries also perform other procedures that reduce emissions from soaking.

We reviewed the work practices at well-controlled batteries to determine the MACT floor for soaking operations. Most batteries have work practices in place to ensure that the gases from open standpipes are ignited during soaking. For example, survey responses show that 26 of the 58 by-product batteries (more than the top 12 percent) have procedures to manually ignite the gases from the standpipe if they do not self ignite. Consequently, we determined that the floor and MACT for soaking for both new and existing units are a work practice standard that ensures that gases vented from the oven are ignited. We chose a time limit of 3 minutes after the standpipe cap is opened to manually ignite if necessary because it provides sufficient time for the topside worker who opened the standpipe to ignite the gases. Compliance is demonstrated through the maintenance of records that document conformance.

- Quenching

Quenching emissions escape through quench towers with huge steam plumes that are released when hot incandescent coke is deluged with water. It is not feasible to capture or measure these emissions. Consequently, as allowed under section 112(h) of the CAA, we developed a quenching standard that is based on design, work practice, and operational requirements.

We reviewed all current State regulations for quenching and determined that all quench towers are subject to design and operational standards. Most regulations prohibit the use of untreated wastewater as make-up water for quenching, require the use of baffles for grit elimination, and include minimum specifications for baffle coverage. These requirements are consistent with our objectives to eliminate the use of dirty hydrocarbon-laden water (as make-up water for quenching) and to improve grit elimination.

Most States also limit total dissolved solids (TDS) in the make-up water used for quenching. The TDS limits range from 500 to 1600 milligrams per liter (mg/L). We believe that a TDS limit is unnecessary to control HAP emissions during quenching because the primary contributor of HAP emissions during quenching is wastewater contaminated with organics from the by-product plant, and solids in the wastewater are not a source of HAP emissions except for trace metals.

We surveyed all coke plants to determine what plants are doing to control quenching emissions. We found

that more than the top 12 percent were implementing specific work practices and equipment requirements. Of the 43 existing quench towers, 40 have baffles, 22 have the baffles cleaned daily, 21 are subject to a TDS limit, 18 have the baffles inspected monthly, and at least 12 have baffles that cover 95 percent or more of the cross sectional area of the tower. Although only four of the eleven States with coke plants ban the use of untreated wastewater, no plants currently use untreated wastewater as make-up water for quenching.

Based on our assessment of the survey results, we conclude that the MACT floor is as follows: (1) Using clean water (i.e., a prohibition of the use of untreated wastewater) as make-up water for quenching, (2) installing baffles that cover at least 95 percent of the cross sectional area of the quench tower (i.e., no more than 5 percent of the cross sectional area of the tower may be uncovered or open to the sky), (3) cleaning baffles daily, (4) inspecting baffles monthly for damaged or missing baffles and blockage, and (5) repairing or replacing any damaged or missing baffles within 1 month. A TDS limit is not included in the MACT floor because we do not believe one is necessary as discussed previously. No plants implement control measures more stringent than this floor, and no such more stringent controls are available and practicable. Consequently, there is no technology beyond the floor. We conclude that the floor is MACT for existing plants and for new plants since the best controlled similar plants are existing plants that implement MACT.

The standard for quenching prohibits the use of untreated wastewater (i.e., dirty water) as make-up water for quenching and requires the installation and maintenance of baffles.

We developed initial compliance provisions that are consistent with the design, work practice, and operational requirements. As part of a plant's notification of compliance status, we require a signed statement certifying that: (1) Only clean water will be used as make-up water for quenching, (2) each quench tower is equipped with baffles that cover at least 95 percent of the cross sectional area of the tower, (3) the baffles will be cleaned at least daily, (4) each quench tower will be inspected monthly for damaged or missing baffles and blockage, and (5) all necessary repairs will be made and any damaged or missing baffles will be repaired or replaced within 1 month (i.e., before the next inspection).

We developed continuous compliance provisions to ensure that plants keep all necessary records verifying that baffles are maintained. The records must be available at any time for inspection.

- Battery Stacks

There are 53 battery stacks that serve 58 batteries. Five plants have a pair of batteries served by one stack, and all other stacks are associated with a single battery. Battery stack emissions occur when raw coke oven gas leaks through oven walls into flues and when there is poor combustion in the underfiring system. Emissions from stacks are usually most noticeable when ovens are charged with coal. Elevated opacity values occur due to the substantial and sudden increase in oven pressure and the resulting leakage of raw coke oven gas into the flue system. The intensity and duration of the in-leakage and impact on stack opacity is a direct result of the physical condition of the oven walls and presence of sealing carbon.

Coke oven emissions from battery stacks are controlled by good operation and maintenance which includes using a COMS in the stack. Good operation and maintenance involves identifying problem ovens that produce high stack opacity emissions when ovens are charged, diagnosing problems, and repairing ovens or adjusting the underfiring system. No batteries currently use add-on control devices for control of emissions from battery stacks.

Most State and local regulations include opacity limits for battery stacks. Examples are 20 percent opacity on six-minute averages, 20 percent opacity for 3 minutes per hour with a cap of 60 percent, and 30 percent opacity with a cap ranging from 30 to 60 percent for 8 minutes per hour. Many require the operation of COMS for diagnostic purposes and as performance indicators. Some States and local agencies also require the use of COMS for continuous compliance determinations.

Based on information from an industry survey and site visits, we determined that the batteries in Burns Harbor, IN and Clairton, PA use good operation and maintenance coupled with COMS to control stack emissions. These data represent the performance of 10 batteries—two at Burns Harbor and eight at Clairton. Battery stacks at both plants use COMS that trigger an alarm when the opacity suddenly increases. The oven that is charged when the alarm sounds is investigated for flue leakage and combustion conditions (flame characteristics, gas pressure, stack draft), and corrective actions are taken as needed. Minor repairs may include spray patching or silica dusting; and if the problem is severe, the oven may be taken out of service for more rigorous repairs including ceramic welding, brick replacement, or repair of the entire oven (e.g., end flue or through wall repairs).

Routine and preventative maintenance are also important control measures and include a daily inspection of flues and walls, cleaning gas piping, checking the reversing mechanism and flue combustion, and measuring flue temperatures. If the removal of excess carbon results in inadequate carbon to seal cracks, the oven wall is sprayed before being charged with coal.

Based on the control measures used by the top 12 percent of units for which we have data, the control measures associated with the MACT floor are good operation and maintenance (as described above) combined with COMS.

No plants implement control measures more stringent than this floor. For example, no plants currently use add-on control devices to treat the emissions from the battery stack. Consequently, we conclude that this is the MACT floor for both new and existing units.

In order to determine what emission limitation is achievable using the control measures associated with the MACT floor, we examined available opacity data for the units using these measures. We analyzed data for batteries with various underfiring systems and battery heights. Specifically, we analyzed data for two tall (six-meter) batteries at a coke plant in Burns Harbor, IN. Data for one tall battery cover a continuous period of 50 months, and data for the other tall battery cover a continuous period of 65 months. We also analyzed data for an 18-month period for eight batteries at another plant in Clairton, PA (seven short four-meter batteries and one tall battery).[2] The daily average opacity rarely exceeds 15 percent for any battery. These data

[2] We also analyzed COMS data for four batteries at a plant in Gary, IN. We did not use these data, however, because we do not believe they represent periods of good systematic operation and maintenance associated with MACT. Some periods of several days of high opacity were documented as caused by cracks or holes in a single oven's walls. Good operation and maintenance would have resulted in the oven being repaired or taken out of service rather than continuing for several days. We found that several days of COMS readings that had not been flagged as invalid were due to a COMS malfunction. Other high opacity readings exist for these batteries, and while we do not have specific information concerning the cause of other such readings, we expect (based on the above information) that they may have been due to problems with the COMS, or other operation and maintenance issues. In any event, the information available to EPA suggests that these batteries did not consistently utilize the operation and maintenance techniques associated with the MACT floor. For these reasons, we do not believe the data for these batteries should be included in the MACT floor analysis.

indicate that each of these batteries is well controlled for stack emissions.

These batteries are representative of the various types of batteries in the U.S. in terms of oven height, types of underfiring systems, and battery age. They include both underjet and gun flue systems, oven heights that range from four to six meters, and battery ages from 6 to 46 years. The data also include temporal effects because they cover at least a 1-year period, and for two batteries cover a 4- to 5-year period.

We examined the data to determine if there are differences in performance associated with oven height and type of underfiring system. Seven short batteries averaged 1 to 4 percent opacity, and three tall batteries averaged 3, 4, and 5 percent opacity. The average opacities of the short and tall batteries overlap, and there is no significant difference in the level of control that is achieved. Similarly, there is no difference in performance between underjet and gun flue underfiring systems.

We evaluated several averaging times to determine an appropriate one for the standard. We determined that conventional short-term averaging times (such as 6-minute averages) are not appropriate for implementing good operation and maintenance. For example, problems with ovens or combustion systems can develop unexpectedly and lead to short-term high opacity events. A longer averaging time is needed to allow adequate time to diagnose the problem and to take corrective actions.

We also evaluated an averaging time based on a 30-day rolling average, which is consistent with the format used in the existing NESHAP for coke oven batteries (40 CFR part 63, subpart L). However, averaging over a 30-day period results in opacity limits of 10 percent or less. The average opacity would be dominated by many very low opacity readings, and the errors in COMS readings at low opacities can have a significant effect on the 30-day average.

After analyzing the COMS data using different averaging times, we selected a daily averaging time as the most appropriate format for the standard. The data show that with few exceptions a daily average limit of 15 percent opacity has been achieved by the ten MACT batteries 99.7 percent of the time.

Data for five batteries at the Clairton, PA plant indicate that stack opacity increases when batteries are placed on extended coking time. The average opacities for batteries on extended coking are approximately twice those of batteries on a normal coking time. This results from less formation of protective sealing carbon that seals small cracks in the oven walls. Battery-wide extended coking is a relatively rare event and is used primarily when the demand for coke drops. We developed a daily average limit of 20 percent opacity for batteries on extended coking to reflect the level achievable by MACT batteries.

We define extended coking as an increase of 25 percent or more in the normal coking time, based on data for one of the Clairton, PA batteries which showed an increase in stack opacity when the coking time was extended from 18 to 23 hours, an increase of about 25 percent. Data for three other batteries also in Clairton showed an increase in opacity when the coking time was increased from 18 to 36 hours.

We considered developing procedures for an alternative opacity limit in the event a battery has implemented all of the components of MACT and cannot achieve the opacity standard. Such an approach would be similar to the adjustment to an opacity emission standard allowed in § 63.6(h)(9) of the NESHAP General Provisions. However, we have been unable to develop criteria that would be used to allow an alternative opacity limit. We are requesting comments on appropriate criteria and supporting rationale.

We also conclude that MACT for new plants is the same as MACT for existing plants since the best-controlled similar plants are existing plants that implement MACT.

We considered whether there were any reasonable options available for above-the-floor controls for battery stacks during either regular or extended coking. As indicated above, no units currently use any other control measures, such as add-on controls,[3] and we don't believe that add-on controls would provide additional HAP reductions significant enough to justify the installation and operational costs.

Therefore, we are proposing the MACT floor limits, daily average limits of 15 percent opacity for batteries on a normal coking time and 20 percent for batteries on an extended coking time, as MACT for both new and existing batteries.

We require COMS because they are a part of the technology associated with MACT and provide a means of measuring opacity and showing continuous compliance. We selected the initial compliance provisions to be consistent with the format of the standard, which is a daily average opacity limit. Opacity measurements must be made with a COMS, and the daily average opacity must be determined. Compliance is demonstrated if the daily average does not exceed 15 percent for a battery on a normal coking cycle or 20 percent for a battery on extended coking.

We selected a daily compliance determination to show continuous compliance because it is consistent with the derivation of the limit and is the approach used for other coke battery emission points regulated under the existing NESHAP for coke ovens (40 CFR part 63, subpart L). Each day, a new daily average is calculated from a continuous record of stack opacity provided by the COMS.

D. How Did We Select the Operation and Maintenance Requirements?

Routine operation and maintenance for the batteries, capture systems, and control devices prevent excess emissions. We collected information from batteries that are well-controlled for pushing and stack emissions from industry surveys, site visits, and consultation with industry experts. For example, we obtained details on the battery preservation program used at a coke plant in Clairton, PA. Subsequently, we developed a list of the operation and maintenance procedures that are applicable to all batteries including routine oven repairs; maintaining the combustion system (inspection of flues, temperature measurements, monitoring air and fuel flow rates); control of coal quality; ensuring complete coking; and preventative maintenance for capture systems and control devices.

E. How Did We Select the Notification, Recordkeeping, and Reporting Requirements?

We selected the notification, recordkeeping, and reporting requirements to be consistent with the NESHAP General Provisions (40 CFR part 63, subpart A). Monthly reports for battery stacks and semiannual reports for other affected sources would also be required. A summary report would be submitted if no deviation occurred; more detailed information must be included if a deviation occurred; a monitoring system was out of control; or there was a startup, shutdown, or malfunction event. An immediate report would be required if actions taken to respond to a startup, shutdown, or malfunction were not consistent with the procedures in the startup,

[3] We note that during the 1970's and 1980's, several batteries used add-on control devices (electrostatic precipitators or baghouses) to control particulate matter emissions from battery stacks. The use of thse devices was subsequently terminated as a result of several plant closures and the increased use of desulfurized coke oven gas.

shutdown, and malfunction plan. The records required by the proposed rule are the minimum needed to demonstrate continuous compliance.

IV. Summary of Environmental, Energy, and Economic Impacts

A. What Are the Air Quality Impacts?

Accurate emission estimates are difficult to make, especially for fugitive pushing emissions. When green pushes occur, most of the organic HAP escape the capture system and are unmeasurable. Our estimate for pushing emissions is based on our best estimates of the capture efficiency and frequency of green pushes. For battery stacks, we have opacity and emissions data for the best-controlled batteries. We had to extrapolate the test data to account for higher emissions from batteries with higher battery stack opacities.

Based on these approaches, we estimate that the proposed rule would reduce coke oven emissions, measured as methylene chloride extractable organic compounds, from pushing, quenching, and battery stacks to approximately 500 tpy from a baseline level of about 1,000 tpy. The proposed rule would also reduce emissions of other HAP, such as metals, benzene, toluene, and other volatiles that are not included with the extractable organics. Emissions of PM would also be reduced.

B. What Are the Cost Impacts?

As with the emission estimates, there is uncertainty in the cost estimates. However, we obtained data from the best controlled plants for their emission controls, oven repairs, and work practices. We then applied these costs to those batteries that we estimate would be impacted by the proposed rule. We estimate that five batteries would incur capital costs to rebuild ovens to meet the proposed standards for pushing and battery stacks. In addition, we estimate that 40 of the 58 by-product batteries would incur additional annual operating costs to implement a baseline program of diagnostic procedures and oven repairs similar to the programs already in place at well-controlled batteries. Three batteries would have to install baffles in their quench towers to control quenching emissions. Monitoring is also an important component of MACT and the cost estimate. Approximately 31 batteries would have to install COMS in their battery stacks, 56 would incur the cost of visible emissions observers for daily observation of pushing emissions, and 42 would install bag leak detection systems for control devices applied to pushing emissions. The control technology and monitoring are expected to result in a nationwide capital cost of about $12 million with a total annualized cost of $14 million per year.

C. What Are the Economic Impacts?

We conducted a detailed assessment of the economic impacts associated with the proposed rule. The compliance costs associated with the proposed rule are expected to increase the price of coke, steel mill products, and iron castings and to reduce their domestic production and consumption. The price of furnace and foundry coke is projected to increase by about 1.5 and 3 percent, respectively. Domestic production of furnace coke is expected to decline by 180,000 tons, or 2.3 percent, with foreign imports increasing by 167,000 tons, or 4.4 percent. For foundry coke, domestic production is expected to decline by only 1,500 tons, or 0.1 percent.

In terms of industry impacts, the integrated steel producers and foundries with cupola furnaces are projected to experience a slight decrease in operating profits, which reflects increased costs of furnace and foundry coke inputs and associated reductions in revenues from producing their final products. Our analysis indicates that one of the captive batteries ceases to supply furnace coke to the market but continues to satisfy internal coke requirements at the integrated steel plant. Through the market impacts described above, the proposed rule has distributional impacts within the merchant segment. The majority of merchant facilities are projected to experience profit increase with the proposed rule; however, some facilities are projected to lose profits. Furthermore, the economic impact analysis indicates that one of the 13 merchant-owned batteries producing furnace coke is at risk of closure because of the proposed rule, while none of the foundry coke producing batteries are at risk of closure. For more information, consult the economic impact analysis supporting this proposed rule.

D. What Are the Non-air Environmental and Energy Impacts?

The technology associated with MACT relies primarily on pollution prevention techniques in the form of work practices and diagnostic procedures to prevent green pushes and leakage through oven walls. Consequently, there are no significant non-air environmental and energy impacts.

V. Solicitation of Comments and Public Participation

We seek full public participation in arriving at final decisions and encourage comments on all aspects of this proposal from all interested parties. You need to submit full supporting data and a detailed analysis with your comments to allow us to make the best use of them. Be sure to direct your comments to the Air and Radiation Docket and Information Center, Docket No. A–2000–34 (see **ADDRESSES**).

We are specifically requesting comments on proposed Options 1 and 2 for fugitive pushing emissions. Proposed Option 1 is an opacity limit based on the average of four pushes. Proposed Option 2 is a work practice standard that includes opacity triggers based on a single push. Exceeding the applicable trigger requires corrective action to identify and correct the problem that caused the green push.

We are also specifically requesting comments on procedures for developing an alternative opacity limit for battery stacks in the event a battery has implemented all of the components of MACT and cannot achieve the opacity standard. We are requesting comments on appropriate criteria and supporting rationale.

VI. Administrative Requirements

A. Executive Order 12866, Regulatory Planning and Review

Under Executive Order 12866 (58 FR 51735, October 4, 1993), the EPA must determine whether the regulatory action is ''significant'' and therefore subject to review by the Office of Management and Budget (OMB) and the requirements of the Executive Order. The Executive Order defines a ''significant regulatory action'' as one that is likely to result in a rule that may:

(1) Have an annual effect on the economy of $100 million or more or adversely affect in a material way the economy, a sector of the economy, productivity, competition, jobs, the environment, public health or safety, or State, local, or tribal governments or communities;

(2) Create a serious inconsistency or otherwise interfere with an action taken or planned by another agency;

(3) Materially alter the budgetary impact of entitlement, grants, user fees, or loan programs or the rights and obligations of recipients thereof; or

(4) Raise novel legal or policy issues arising out of legal mandates, the President's priorities, or the principles set forth in the Executive Order.

Pursuant to the terms of Executive Order 12866, it has been determined

that this regulatory action is not a ''significant regulatory action'' because none of the listed criteria apply to this action. Consequently, this action was not submitted to OMB for review under Executive Order 12866.

B. Executive Order 13132, Federalism

Executive Order 13132, entitled ''Federalism'' (64 FR 43255, August 10, 1999), requires EPA to develop an accountable process to ensure ''meaningful and timely input by State and local officials in the development of regulatory policies that have federalism implications.'' ''Policies that have federalism implications'' is defined in the Executive Order to include regulations that have ''substantial direct effects on the States, on the relationship between the national government and the States, or on the distribution of power and responsibilities among the various levels of government.'' Under Executive Order 13132, EPA may not issue a regulation that has federalism implications, that imposes substantial direct compliance costs, and that is not required by statute, unless the Federal government provides the funds necessary to pay the direct compliance costs incurred by State and local governments, or EPA consults with State and local officials early in the process of developing the proposed regulation. The EPA also may not issue a regulation that has federalism implications and that preempts State law unless the EPA consults with State and local officials early in the process of developing the proposed regulation.

If EPA complies by consulting, Executive Order 13132 requires EPA to provide to OMB, in a separately identified section of the preamble to the rule, a federalism summary impact statement (FSIS). The FSIS must include a description of the extent of EPA's prior consultation with State and local officials, a summary of the nature of their concerns and the Agency's position supporting the need to issue the regulation, and a statement of the extent to which the concerns of State and local officials have been met. Also, when EPA transmits a draft final rule with federalism implications to OMB for review pursuant to Executive Order 12866, EPA must include a certification from the Agency's Federalism Official stating that EPA met the requirements of Executive Order 13132 in a meaningful and timely manner.

This proposed rule does not have federalism implications. It will not have substantial direct effects on the States, on the relationship between the national government and the States, or on the distribution of power and responsibilities among the various levels of government, as specified in Executive Order 13132. None of the affected facilities are owned or operated by State governments, and the proposed rule requirements will not supercede State regulations that are more stringent. Thus, the requirements of section 6 of the Executive Order do not apply to this rule.

C. Executive Order 13084, Consultation and Coordination with Indian Tribal Governments

On January 1, 2001, Executive Order 13084 was superseded by Executive Order 13175. However, this proposed rule was developed during the period when Executive Order 13084 was still in force, and so tribal considerations were addressed under Executive Order 13084. Development of the final rule will address tribal considerations under Executive Order 13175. Under Executive Order 13084, EPA may not issue a regulation that is not required by statute, that significantly or uniquely affects the communities of Indian tribal governments, and that imposes substantial direct compliance costs on those communities, unless the Federal government provides the funds necessary to pay the direct compliance costs incurred by the tribal governments, or EPA consults with those governments. If EPA complies by consulting, Executive Order 13084 requires EPA to provide to OMB, in a separately identified section of the preamble to the rule, a description of the extent of EPA's prior consultation with representatives of affected tribal governments, a summary of the nature of their concerns, and a statement supporting the need to issue the regulation. In addition, Executive Order 13084 requires the EPA to develop an effective process permitting elected officials and other representatives of Indian tribal governments ''to provide meaningful and timely input in the development of regulatory policies on matters that significantly or uniquely affect their communities.''

Today's proposed rule does not significantly or uniquely affect the communities of Indian tribal governments. No tribal governments own or operate coke oven batteries. The proposed rule is required by statute and will not impose any substantial direct compliance costs. Accordingly, the requirements of section 3(b) of Executive Order 13084 do not apply to this action.

D. Executive Order 13045, Protection of Children from Environmental Health Risks and Safety Risks

Executive Order 13045 (62 FR 19885, April 23, 1997) applies to any rule that: (1) Is determined to be ''economically significant,'' as defined under Executive Order 12866, and (2) concerns an environmental health or safety risk that EPA has reason to believe may have a disproportionate effect on children. If the regulatory action meets both criteria, the EPA must evaluate the environmental health or safety effects of the planned rule on children and explain why the planned regulation is preferable to other potentially effective and reasonably feasible alternatives considered by the Agency.

The EPA interprets Executive Order 13045 as applying only to those regulatory actions that are based on health or safety risks, such that the analysis required under section 5–501 of the Executive Order has the potential to influence the regulation. This rule is not subject to Executive Order 13045 because it is technology based and not based on health or safety risks. No children's risk analysis was performed because no alternative technologies exist that would provide greater stringency at a reasonable cost. Further, this proposed rule has been determined not to be ''economically significant'' as defined under Executive Order 12866.

E. Unfunded Mandates Reform Act of 1995

Title II of the Unfunded Mandates Reform Act of 1995 (UMRA), Public Law 104–4, establishes requirements for Federal agencies to assess the effects of their regulatory actions on State, local, and tribal governments and the private sector. Under section 202 of the UMRA, the EPA generally must prepare a written statement, including a cost-benefit analysis, for proposed and final rules with ''Federal mandates'' that may result in expenditures by State, local, and tribal governments, in the aggregate, or by the private sector, of $100 million or more in any 1 year. Before promulgating an EPA rule for which a written statement is needed, section 205 of the UMRA generally requires the EPA to identify and consider a reasonable number of regulatory alternatives and adopt the least costly, most cost-effective, or least-burdensome alternative that achieves the objectives of the rule. The provisions of section 205 do not apply when they are inconsistent with applicable law. Moreover, section 205 allows the EPA to adopt an alternative other than the least-costly, most cost-effective, or least-

burdensome alternative if the Administrator publishes with the final rule an explanation why that alternative was not adopted. Before the EPA establishes any regulatory requirements that may significantly or uniquely affect small governments, including tribal governments, it must have developed under section 203 of the UMRA a small government agency plan. The plan must provide for notifying potentially affected small governments, enabling officials of affected small governments to have meaningful and timely input in the development of EPA regulatory proposals with significant Federal intergovernmental mandates, and informing, educating, and advising small governments on compliance with the regulatory requirements.

The EPA has determined that this proposed rule does not contain a Federal mandate that may result in estimated costs of $100 million or more to either State, local, or tribal governments, in the aggregate, or to the private sector in any 1 year. The maximum total annual cost of this proposed rule for any year has been estimated to be less than $19 million. Thus, today's proposed rule is not subject to sections 202 and 205 of the UMRA. In addition, the EPA has determined that this proposed rule contains no regulatory requirements that might significantly or uniquely affect small governments because it contains no requirements that apply to such governments or impose obligations upon them. Therefore, today's proposed rule is not subject to the requirements of section 203 of the UMRA.

F. Regulatory Flexibility Act (RFA), as Amended by the Small Business Regulatory Enforcement Fairness Act of 1996 (SBREFA), 5 U.S.C. et seq.

The RFA generally requires an agency to prepare a regulatory flexibility analysis of any rule subject to notice and comment rulemaking requirements under the Administrative Procedure Act or any other statute unless the agency certifies that the rule will not have a significant economic impact on a substantial number of small entities. Small entities include small businesses, small organizations, and small governmental jurisdictions.

For purposes of assessing the impacts of the proposed rule on small entities, small entity is defined as: (1) A small business ranging from 500 to 1,000 employees; (2) a small governmental jurisdiction that is a government of a city, county, town, school district or special district with a population of less than 50,000; and (3) a small organization that is any not-for-profit enterprise which is independently owned and operated and is not dominant in its field.

After considering the economic impacts of today's proposed rule on small entities, I certify that this action will not have a significant impact on a substantial number of small entities. In accordance with the RFA, we conducted an assessment of the proposed rule on small businesses within the coke manufacturing industry. Based on SBA size definitions for the affected industries and reported sales and employment data, we identified three of the 18 companies within this source category as small businesses. Although small businesses represent 16 percent of the companies within the source category, they are expected to incur only 11 percent of the total industry compliance costs of $14.3 million. The average total annual compliance cost is projected to be $533,000 per small company, while the average for large companies is projected to be $840,000 per company. Under the proposed rule, the mean annual compliance cost, as a share of sales, for small businesses is 1.3 percent, and the median is 1.4 percent, with a range of 0.04 to 2.4 percent. We estimate that two of the three small businesses may experience an impact greater than 1 percent of sales, but no small businesses will experience an impact greater than 3 percent of sales.

We performed an economic impact analysis to estimate the changes in product price and production quantities for the firms affected by this proposed rule. Although this industry is characterized by average profit margins of close to 4 percent, our analysis indicates that none of the coke manufacturing facilities owned by small businesses are at risk of closure because of today's proposed rule. In fact, the two facilities manufacturing furnace coke are projected to experience a slight increase in profits because of market feedbacks related to higher costs incurred by competitors, while the one facility manufacturing foundry coke is projected to experience a decline in profits of slightly more than 1 percent.

In summary, the economic impact analysis supports today's certification under the RFA because, while a few small firms may experience initial impacts greater than 1 percent of sales, no significant impacts on their viability to continue operations and remain profitable are indicated. See Docket A–2000–34 for more information on the economic analysis.

Although this proposed rule will not have a significant economic impact on a substantial number of small entities, we have nonetheless worked aggressively to minimize the impact of this proposed rule on small entities, consistent with our obligations under the CAA. We have made site visits to these plants and discussed potential impacts and opportunities for emission reductions with company representatives. Company representatives have also attended meetings held with industry trade associations to discuss the proposed rule, and we have included provisions in the proposed rule that address their concerns.

G. Paperwork Reduction Act

The information collection requirements in this proposed rule will be submitted for approval to OMB under the Paperwork Reduction Act, 44 U.S.C. 3501 *et seq.* An information collection request (ICR) document has been prepared by EPA (ICR No. 1995.01), and a copy may be obtained from Sandy Farmer by mail at the Office of Environmental Information, Collection Strategies Division, U.S. Environmental Protection Agency (2822), 1200 Pennsylvania Avenue, Washington, DC 20460, by e-mail at farmer.sandy@epa.gov, or by calling (202) 260–2740. A copy may also be downloaded off the Internet at *http://www.epa.gov/icr.* The information requirements are not effective until OMB approves them.

The information requirements are based on notification, recordkeeping, and reporting requirements in the NESHAP General Provisions (40 CFR part 63, subpart A), which are mandatory for all operators subject to NESHAP. These recordkeeping and reporting requirements are specifically authorized by section 112 of the CAA (42 U.S.C. 7414). All information submitted to the EPA pursuant to the recordkeeping and reporting requirements for which a claim of confidentiality is made is safeguarded according to Agency policies in 40 CFR part 2, subpart B.

The proposed rule requires maintenance inspections of control devices, two types of written plans (in addition to the startup, shutdown, and malfunction plan required by the NESHAP General Provisions), and a special study of flue temperatures for by-product coke oven batteries with horizontal flues. Monthly reports of any deviations from the applicable limits for battery stacks are required, with semiannual reports for other affected sources. The recordkeeping requirements require only the specific information needed to determine compliance.

The annual public reporting and recordkeeping burden for this collection of information (averaged over the first 3 years after the effective date of the final rule) is estimated to total 11,000 labor hours per year at a total annual cost of $710,000. This estimate includes one-time performance tests and reports (with repeat tests where needed); subsequent tests, preparation and submission of operation and maintenance plans, and a special study of flue temperatures; one-time purchase and installation of continuous monitoring systems; one-time preparation of a standard operating procedures manual for baghouses; one-time preparation of a startup, shutdown, and malfunction plan with semiannual reports if procedures in the plan were followed or emergency reports if they weren't followed; monthly and semiannual deviation summary reports; and inspections, notifications, and recordkeeping. Total capital/startup costs associated with the monitoring requirements over the 3-year period of the ICR is estimated at $46,000 per year, with operation and maintenance costs of $76,000 per year.

Burden means the total time, effort, or financial resources expended by persons to generate, maintain, retain, or disclose or provide information to or for a Federal agency. This includes the time needed to review instructions; develop, acquire, install, and utilize technology and systems for the purpose of collecting, validating, and verifying information; adjust the existing ways to comply with any previously applicable instructions and requirements; train personnel to respond to a collection of information; search existing data sources; complete and review the collection of information; and transmit or otherwise disclose the information.

An Agency may not conduct or sponsor, and a person is not required to respond to, a collection of information unless it displays a currently valid OMB control number. The OMB control number for EPA's regulations are listed in 40 CFR part 9 and 48 CFR chapter 15.

Comments are requested on the EPA's need for this information, the accuracy of the burden estimates, and any suggested methods for minimizing respondent burden, including through the use of automated collection techniques. Send comments on the ICR to the Director, Collection Strategies Division (2822), U.S. Environmental Protection Agency (2136), 1200 Pennsylvania Avenue, NW, Washington, DC 20460; and to the Office of Information and Regulatory Affairs, Office of Management and Budget, 725 17th Street, NW, Washington, DC 20503, marked ''Attention: Desk Officer for EPA.'' Include the ICR number in any correspondence. Because OMB is required to make a decision concerning the ICR between 30 and 60 days after July 3, 2001, a comment to OMB is best assured of having its full effect if OMB receives it by August 2, 2001. The final rule will respond to any OMB or public comments on the information collection requirements contained in this proposed rule.

H. National Technology Transfer and Advancement Act

Section 12(d) of the National Technology Transfer and Advancement Act (NTTAA) of 1995 (Pub. L. 104–113; 15 U.S.C 272 note), directs EPA to use voluntary consensus standards in their regulatory and procurement activities unless to do so would be inconsistent with applicable law or otherwise impracticable. Voluntary consensus standards are technical standards (such as material specifications, test methods, sampling procedures, business practices) developed or adopted by one or more voluntary consensus standard bodies. The NTTAA directs EPA to provide Congress, through annual reports to OMB, with explanations when an agency does not use available and applicable voluntary consensus standards.

This proposed rulemaking involves technical standards. The EPA proposes to use EPA Methods 1, 2, 2F, 2G, 3, 3A, 3B, 4, 5, 5D, and 9 in 40 CFR part 60, appendix A, and Performance Specification 1 in 40 CFR part 60, appendix B. Consistent with the NTTAA, we conducted searches to identify voluntary consensus standards in addition to these EPA methods.

One voluntary consensus standard was identified as applicable to Performance Specification 1. The standard, ASTM D6216 (1998), Standard Practice for Opacity Monitor Manufacturers to Certify Conformance with Design and Performance Specifications, has been incorporated by reference into Performance Specification 1 (65 FR 48920, August 10, 2000).

Our search for emissions monitoring procedures identified 16 other voluntary consensus standards. We determined that 13 of these standards identified for measuring emissions of HAP or surrogates would not be practical due to lack of equivalency, detail, or quality assurance/quality control requirements. The three remaining consensus standards identified in the search are under development or under EPA review. Therefore, we do not propose to use these voluntary consensus standards in the proposed rule. See Docket A–2000–34 for more detailed information on the search and review results.

The EPA requests comments on the proposed compliance demonstration requirements in the proposed rule and specifically invites the public to identify potentially applicable voluntary consensus standards. Commenters should also explain why this proposed rule should adopt these voluntary consensus standards in lieu of, or in addition to, EPA's methods. Emission test methods and performance specifications submitted for evaluation should be accompanied with a basis for the recommendation, including method validation data and the procedures used to validate the candidate method (if a method other Method 301 in 40 CFR part 63, appendix A was used).

Section 63.7322 of proposed subpart CCCCC lists the EPA test methods that coke plants would be required to use when conducting a performance test. Most of these methods have been used by States and the industry for more than 10 years. Nevertheless, § 63.7(e) and (f) of the NESHAP General Provisions in 40 CFR part 63, subpart A, allows any State or source to apply to EPA for permission to use an alternative method in place of any of the EPA test methods or performance specifications required by the proposed rule.

List of Subjects in 40 CFR Part 63

Environmental protection, Administrative practice and procedure, Air pollution control, Coke ovens, Hazardous substances, Intergovernmental relations, Reporting and recordkeeping requirements.

Dated: January 19, 2001.

Carol M. Browner,

Administrator.

For the reasons stated in the preamble, title 40, chapter I, part 63, of the Code of Federal Regulations is proposed to be amended as follows:

PART 63—[AMENDED]

1. The authority citation for part 63 continues to read as follows:

Authority: 42 U.S.C. 7401, *et seq.*

2. Part 63 is amended by adding subpart CCCCC to read as follows:

Subpart CCCCC—National Emission Standards for Hazardous Air Pollutants for Coke Ovens: Pushing, Quenching, and Battery Stacks

Sec.

What This Subpart Covers

63.7280 What is the purpose of this subpart?
63.7281 Am I subject to this subpart?

63.7282 What parts of my plant does this subpart cover?
63.7283 When do I have to comply with this subpart?
63.7284–63.7289 [Reserved]

Emission Limitations and Work Practice Standards

63.7290 What emission limitations must I meet for capture systems and control devices applied to pushing emissions?
63.7291 What emission limitations or work practice standards must I meet for fugitive pushing emissions if I have a by-product coke oven battery with vertical flues?
63.7292 What work practice standards must I meet for fugitive pushing emissions if I have a by-product coke oven battery with horizontal flues?
63.7293 What work practice standards must I meet for fugitive pushing emissions if I have a non-recovery coke oven battery?
63.7294 What work practice standard must I meet for soaking?
63.7295 What work practice standards must I meet for quenching?
63.7296 What emission limitations must I meet for battery stacks?
63.7297–63.7299 [Reserved]

Operation and Maintenance Requirements

63.7300 What are my operation and maintenance requirements?
63.7301—63.7309 [Reserved]

General Compliance Requirements

63.7310 What are my general requirements for complying with this subpart?
63.7311–63.7319 [Reserved]

Initial Compliance Requirements

63.7320 By what date must I conduct performance tests or other initial compliance demonstrations?
63.7321 When must I conduct subsequent performance tests?
63.7322 What test methods and other procedures must I use to demonstrate initial compliance with the emission limits for particulate matter?
63.7323 What procedures must I use to establish operating limits?
63.7324 What test methods and other procedures must I use to demonstrate initial compliance with the opacity limits?
63.7325 How do I demonstrate initial compliance with the emission limitations that apply to me?
63.7326 How do I demonstrate initial compliance with the work practice standards that apply to me?
63.7327 How do I demonstrate initial compliance with the operation and maintenance requirements that apply to me?
63.7328–63.7329 [Reserved]

Continuous Compliance Requirements

63.7330 What are my monitoring requirements?
63.7331 What are the installation, operation, and maintenance requirements for my monitors?
63.7332 How do I monitor and collect data to demonstrate continuous compliance?
63.7333 How do I demonstrate continuous compliance with the emission limitations that apply to me?
63.7334 How do I demonstrate continuous compliance with the work practice standards that apply to me?
63.7335 How do I demonstrate continuous compliance with the operation and maintenance requirements that apply to me?
63.7336 What other requirements must I meet to demonstrate continuous compliance?
63.7337–63.7339 [Reserved]

Notifications, Reports, and Records

63.7340 What notifications must I submit and when?
63.7341 What reports must I submit and when?
63.7342 What records must I keep?
63.7343 In what form and how long must I keep my records?
63.7344–63.7349 [Reserved]

Other Requirements and Information

63.7350 What parts of the General Provisions apply to me?
63.7351 Who implements and enforces this subpart?
63.7352 What definitions apply to this subpart?
63.7353–63.7379 [Reserved]

Tables to Subpart CCCCC

Table 1 to Subpart CCCCC—Applicability of General Provisions to Subpart CCCCC

Subpart CCCCC—National Emission Standards for Hazardous Air Pollutants for Coke Ovens: Pushing, Quenching, and Battery Stacks

What This Subpart Covers

§ 63.7280 What is the purpose of this subpart?

This subpart establishes national emission standards for hazardous air pollutants (NESHAP) for pushing, quenching, and battery stacks at coke oven batteries. This subpart also establishes requirements to demonstrate initial and continuous compliance with all applicable emission limitations, work practice standards, and operation and maintenance requirements in this subpart.

§ 63.7281 Am I subject to this subpart?

You are subject to this subpart if you own or operate a coke oven battery at a coke plant that is (or is part of) a major source of hazardous air pollutants (HAP) emissions on the first compliance date that applies to you. Your coke plant is a major source of HAP if it emits or has the potential to emit any single HAP at a rate of 10 tons or more per year or any combination of HAP at a rate of 25 tons or more per year.

§ 63.7282 What parts of my plant does this subpart cover?

(a) This subpart applies to each new or existing coke oven battery at your coke plant.

(b) This subpart covers emissions from pushing, soaking, quenching, and battery stacks from each affected source.

(c) An affected source at your coke plant is existing if you commenced construction or reconstruction of the affected source before July 3, 2001.

(d) An affected source at your coke plant is new if you commence construction or reconstruction of the affected source on or after July 3, 2001. An affected source is reconstructed if it meets the definition of ''reconstruction'' in § 63.2.

§ 63.7283 When do I have to comply with this subpart?

(a) If you have an existing affected source, you must comply with each emission limitation, work practice standard, and operation and maintenance requirement in this subpart that applies to you no later than [2 YEARS FROM THE DATE OF PUBLICATION OF THE FINAL RULE IN THE **Federal Register**].

(b) If you have a new affected source and its initial startup date is on or before [DATE OF PUBLICATION OF THE FINAL RULE IN THE **Federal Register**], you must comply with each emission limitation, work practice standard, and operation and maintenance requirement in this subpart that applies to you by [DATE OF PUBLICATION OF THE FINAL RULE IN THE **Federal Register**].

(c) If you have a new affected source and its initial startup date is after [DATE OF PUBLICATION OF THE FINAL RULE IN THE **Federal Register**], you must comply with each emission limitation, work practice standard, and operation and maintenance requirement in this subpart that applies to you upon initial startup.

(d) If your coke plant is an area source that becomes a major source of HAP, the following compliance dates apply to you.

(1) Any portion of the existing coke plant that is a new affected source or a new reconstructed source must be in compliance with this subpart upon startup.

(2) All other parts of the coke plant must be in compliance with this subpart no later than 2 years after it becomes a major source.

(e) You must meet the notification and schedule requirements in § 63.7340. Several of these notifications must be submitted before the compliance date for your affected source.

§§ 63.7284—63.7289 [Reserved]

Emission Limitations and Work Practice Standards

§ 63.7290 What emission limitations must I meet for capture systems and control devices applied to pushing emissions?

(a) You must not discharge to the atmosphere emissions of particulate matter from a control device applied to pushing emissions from a new or existing coke oven battery that exceed the applicable limit in paragraphs (a)(1) through (4) of this section.

(1) 0.004 grain per dry standard cubic foot (gr/dscf) if a cokeside shed is used to capture emissions.

(2) 0.017 pound per ton (lb/ton) of coke if a moveable hood vented to a stationary control device is used to capture emissions.

(3) If a mobile scrubber car that does not capture emissions during travel is used:

(i) 0.023 lb/ton of coke for a control device applied to pushing emissions from a short coke oven battery; or

(ii) 0.010 lb/ton of coke from control device applied to pushing emissions from a tall coke oven battery.

(4) 0.039 lb/ton of coke if a mobile scrubber car that captures emissions during travel is used.

(b) You must meet each operating limit in paragraphs (b)(1) through (3) of this section that applies to you for a new or existing coke oven battery.

(1) For each baghouse applied to pushing emissions, you must operate the baghouse such that the bag leak detection system, if applicable, does not alarm for more than 5 percent of the total operating time in any semiannual reporting period.

(2) For each venturi scrubber applied to pushing emissions, you must maintain the daily average pressure drop and scrubber water flow rate at or above the minimum levels established during the initial performance test.

(3) For each capture system applied to pushing emissions, you must:

(i) Maintain the fan motor amperes at or above the minimum level established during the initial performance test; or

(ii) Maintain the volumetric flow rate at the inlet of the control device at or above the minimum level established during the initial performance test.

§ 63.7291 What emission limitations or work practice standards must I meet for fugitive pushing emissions if I have a by-product coke oven battery with vertical flues?

(a) Opacity limit (Option 1). [**Note:** This is one of two options being proposed for comment. Based on comments we receive on proposed subpart CCCCC, we will promulgate Option 1 in this paragraph (a) or Option 2 in paragraph (b) of this section or some combination of these two options.] You must not discharge to the atmosphere fugitive pushing emissions from a new or existing by-product coke oven battery that exhibit an opacity, as determined by the procedures in § 63.7324(b), in excess of 20 percent for each short battery and 25 percent for each tall battery.

(b) Work practice standard (Option 2). [**NOTE:** This is one of two options being proposed for comment. Based on comments we receive on proposed subpart CCCCC, we will promulgate Option 1 in paragraph (a) of this section or Option 2 in this paragraph (b) or some combination of these two options.] You must comply with each of the requirements in paragraphs (b)(1) through (11) of this section for each new or existing by-product coke oven battery.

(1) Observe and record the opacity of fugitive pushing emissions from four consecutive pushes each operating day.

(2) Conduct all opacity observations using the procedures in § 63.7324(b)(1) through (3).

(3) Do not alter the pushing schedule so as to change the sequence of consecutive pushes to be observed in any day.

(4) Observe and record the opacity of emissions from each oven at least once every 3 months. If an oven cannot be observed during any 3-month period because it has been taken out of service, you must observe and record the opacity of emissions from the oven during the first daytime push once the oven is brought back into service.

(5) If the average opacity of the six highest consecutive 15-second readings (or the actual number of readings if there are fewer than six readings) for any individual push is more than 30 percent for any short battery or 35 percent for any tall battery, you must take corrective action and demonstrate that corrective action was successful within the allowed number of days according to Equation 1 of this section, or remove the oven from service:

$$X = 0.63 * Y \qquad \text{(Eq. 1)}$$

Where:

X = Number of days allowed to take corrective action and demonstrate that the corrective action has been successful; and

Y = Normal coking time for the oven, hours.

(6) To demonstrate that corrective action was successful, observe and record two consecutive daytime pushes for the oven within the allowed number of days. If neither observation exceeds the applicable opacity trigger, the corrective action was successful, and you may return the oven to normal status. If an opacity observation for one or both of the two consecutive pushes exceeds the applicable opacity trigger, the corrective action was not successful. If the corrective action was not successful within the allowed number of days, remove the oven from service until repairs have been completed.

(7) When an oven is removed from service and is subsequently returned to service after repairs have been completed, observe and record two daytime pushes of the oven within the first four pushes after the oven is returned to service to confirm that the repairs were successful. You have demonstrated that the repairs were successful if neither of the observations exceeds the applicable opacity trigger. If the opacity trigger is exceeded for either push, the repair was not successful, and you must remove the oven from service until additional repairs or corrective action are completed and you demonstrate in accordance with this paragraph(b)(7) that the subsequent repairs were successful.

(8) If any oven is removed from service more than four times in any semiannual reporting period as a result of exceeding the opacity trigger, remove the oven from service and notify your permitting authority. You may not return the oven to service until your permitting authority determines that you have taken all appropriate actions and provides you written authorization to return the oven to service.

(9) If you use extended coking as the corrective action, keep the oven on extended coking unless you correct the problem. You may return to normal coking time only after you have demonstrated, based on the observation of the first two consecutive daytime pushes while on normal coking time, that neither of the observations exceeds the applicable opacity trigger. If either observation exceeds the applicable opacity trigger, you must return the oven to extended coking or remove the oven from service until repairs or other corrective actions have been completed.

(10) You may decrease your extended coking time after you have demonstrated, based on the observation of the first two consecutive daytime pushes after the coking time was reduced, that neither of the observations exceeds the applicable opacity trigger. If either observation exceeds the applicable opacity trigger, you must return the oven to the previous extended coking time or remove the oven from service until repairs or other corrective actions have been completed.

(11) If you remove an oven from service, take measures to mitigate possible adverse effects on adjacent ovens due to removing the oven from service.

(c) As provided in § 63.6(g), you may request to use an alternative to the work practice standards in paragraph (b) of this section.

§ 63.7292 What work practice standards must I meet for fugitive pushing emissions if I have a by-product coke oven battery with horizontal flues?

(a) You must comply with each of the requirements in paragraphs (a)(1) through (6) of this section.

(1) Prepare and operate by a written plan designed to prevent green pushes from each by-product coke oven battery with horizontal flues. The written plan must establish minimum flue temperatures at different coking times and the lowest acceptable minimum flue temperature.

(i) The minimum flue temperatures must be based on a study conducted by the plant that considers different means for correlating flue temperature and coking time, including the percent volatile matter in the coke, the color of emissions, the opacity and duration of emissions, and whether emissions continue during quench car travel.

(ii) Submit the written plan and supporting documentation to the applicable permitting authority for review and approval.

(2) Measure and record the temperature of all flues on two ovens per day for each battery within 2 hours of the scheduled pushing time for each oven. If two or more batteries are served by the same pushing equipment and total no more than 60 ovens, the batteries as a unit can be considered a single battery.

(3) Measure and record the temperature of all flues on each oven at least once each month.

(4) Record the time each oven is charged and pushed. Calculate and record the net coking time for each oven.

(5) If any measured flue temperature for an oven is below the minimum flue temperature for an oven's coking time established in the written plan, extend the coking time of the oven by the amount specified in the written plan for that flue temperature before pushing the oven. For any oven put on extended coking you must:

(i) Use oven-directed procedures to find the cause of the low flue temperature. Take corrective action to fix the problem;

(ii) Continue to measure and record the flue temperatures for the oven within 2 hours of the scheduled pushing time until the measurements prior to two consecutive pushes meet the minimum temperature requirements for the extended coking time; and

(iii) Once the heating problem has been corrected, the oven may be returned to the battery's general coking schedule. Measure and record the flue temperatures for the oven within 2 hours of the scheduled pushing time for the next two consecutive pushes. If any flue temperature measurement is below the minimum flue temperature for that coking time established in the written plan, repeat the procedures in paragraphs (a)(5)(i) and (ii) of this section.

(6) If any flue temperature measurement is below the lowest acceptable minimum temperature for complete coking established in the written plan, remove the oven from service for repairs. After repairing the oven, you must:

(i) Follow the procedures outlined in the written work practice plan to return the oven to service after repairs are complete; and

(ii) Measure and record the flue temperatures for the oven within 2 hours of the scheduled pushing time. If any flue temperature measurement is below the minimum flue temperature for that coking time established in the written plan, repeat the procedures in paragraph (a)(5) of this section.

(b) As provided in § 63.6(g), you may request to use an alternative to the work practice standards in paragraph (a) of this section.

§ 63.7293 What work practice standards must I meet for fugitive pushing emissions if I have a non-recovery coke oven battery?

(a) You must meet the requirements in paragraphs (a)(1) and (2) of this section for each new and existing non-recovery coke oven battery.

(1) You must visually inspect each oven prior to pushing by opening the door damper and observing the bed of coke.

(2) Do not push the oven unless the visual inspection indicates that there is no smoke in the open space above the coke bed and that there is an unobstructed view of the door on the opposite side of the oven.

(b) As provided in § 63.6(g), you may request to use an alternative to the work practice standard in paragraph (a) of this section.

§ 63.7294 What work practice standard must I meet for soaking?

(a) For each new or existing by-product coke oven battery, you must manually ignite within 3 minutes after opening the standpipe cap any gases vented to the atmosphere from a standpipe during soaking that do not ignite automatically.

(b) As provided in § 63.6(g), you may request to use an alternative to the work practice standard in paragraph (a) of this section.

§ 63.7295 What work practice standards must I meet for quenching?

(a) You must meet each of the requirements in paragraphs (a)(1) through (5) of this section for each quench tower for a new or existing coke oven battery.

(1) You must equip each quench tower with baffles such that at least 95 percent of the cross-sectional area of the tower is covered.

(2) You must wash the baffles in each quench tower daily.

(3) You must inspect each quench tower monthly for damaged or missing baffles and blockage.

(4) You must repair or replace all damaged or missing baffles before the next scheduled inspection.

(5) You must use clean water, as defined in § 63.7352, as make-up water.

(b) As provided in § 63.6(g), you may request to use an alternative to the work practice standards in paragraph (a) of this section.

§ 63.7296 What emission limitations must I meet for battery stacks?

(a) You must not discharge to the atmosphere any emissions that exit the stack of a new or existing by-product coke oven battery and exhibit an opacity greater than the applicable limit in paragraphs (a)(1) and (2) of this section.

(1) Daily average of 15 percent opacity for a battery on a normal coking cycle.

(2) Daily average of 20 percent opacity for a battery on batterywide extended coking.

(b) [Reserved]

§§ 63.7297–63.7299 [Reserved]

Operation and Maintenance Requirements

§ 63.7300 What are my operation and maintenance requirements?

(a) As required by § 63.6(e)(1)(i), you must always operate and maintain your affected source, including air pollution control and monitoring equipment, in a manner consistent with good air pollution control practices for minimizing emissions at least to the levels required by this subpart.

(b) You must prepare and operate at all times according to a written operation and maintenance plan for the general operation and maintenance of new or existing by-product coke oven

batteries. Each plan must address, at a minimum, the elements listed in paragraphs (b)(1) through (5) of this section.

(1) Frequency and method of recording underfiring gas parameters, including at a minimum, measurement of fuel: air ratio and fuel flow rate.

(2) Frequency and method of recording battery operating temperature, including measurement of individual flue and cross-wall temperatures.

(3) Procedures to prevent pushing an oven out of sequence or pushing prematurely.

(4) Procedures to prevent undercharging and overcharging of ovens, including measurement of coal moisture, coal bulk density, and volume of coal charged.

(5) Frequency and procedures for inspecting flues, burners, and nozzles.

(c) You must prepare and operate at all times according to a written operation and maintenance plan for each capture system and control device applied to pushing emissions from a new or existing coke oven battery. Each plan must address at a minimum the elements in paragraphs (c)(1) through (3) of this section.

(1) Monthly inspections of the equipment that are important to the performance of the total capture system (e.g., pressure sensors, dampers, and damper switches). This inspection must include observations of the physical appearance of the equipment (e.g., presence of holes in ductwork or hoods, flow constrictions caused by dents or accumulated dust in ductwork, and fan erosion). The operation and maintenance plan must also include requirements to repair any defect or deficiency in the capture system before the next scheduled inspection.

(2) Preventative maintenance for each control device, including a preventative maintenance schedule that is consistent with the manufacturer's instructions for routine and long-term maintenance.

(3) Corrective action for all baghouses applied to pushing emissions. In the event a bag leak detection system alarm is triggered, you must initiate corrective action to determine the cause of the alarm within 1 hour of the alarm, initiate corrective action to correct the cause of the problem within 24 hours of the alarm, and complete the corrective action as soon as practicable. Actions may include, but are not limited to:

(i) Inspecting the baghouse for air leaks, torn or broken bags or filter media, or any other condition that may cause an increase in emissions.

(ii) Sealing off defective bags or filter media.

(iii) Replacing defective bags or filter media or otherwise repairing the control device.

(iv) Sealing off a defective baghouse compartment.

(v) Cleaning the bag leak detection system probe, or otherwise repairing the bag leak detection system.

(vi) Shutting down the process producing the particulate emissions.

§§ 63.7301–63.7309 [Reserved]

General Compliance Requirements

§ 63.7310 What are my general requirements for complying with this subpart?

(a) You must be in compliance with the emission limitations, work practice standards, and operation and maintenance requirements in this subpart at all times, except during periods of startup, shutdown, and malfunction as defined in § 63.2.

(b) During the period between the compliance date specified for your affected source in § 63.7283 and the date upon which continuous monitoring systems have been installed and certified and any applicable operating limits have been set, you must maintain a log detailing the operation and maintenance of the process and emissions control equipment.

(c) You must develop and implement a written startup, shutdown, and malfunction plan according to the provisions in § 63.6(e)(3).

§§ 63.7311–63.7319 [Reserved]

Initial Compliance Requirements

§ 63.7320 By what date must I conduct performance tests or other initial compliance demonstrations?

(a) As required in § 63.7(a)(2), you must conduct a performance test for each coke oven battery within 180 calendar days of the compliance date that is specified in § 63.7283 for your affected source to demonstrate initial compliance with the emission and opacity limits in this subpart.

(b) For each work practice standard and operation and maintenance requirement that applies to you where initial compliance is not demonstrated using a performance test or opacity observation, you must demonstrate initial compliance within 30 calendar days after the compliance date that is specified for your affected source in § 63.7283.

(c) If you commenced construction or reconstruction between July 3, 2001 and [DATE OF PUBLICATION OF THE FINAL RULE IN THE **Federal Register**], you must demonstrate initial compliance with either the proposed emission limit or the promulgated emission limit no later than [180 DAYS FROM THE DATE OF PUBLICATION OF THE FINAL RULE IN THE **Federal Register**] or no later than 180 calendar days after startup of the source, whichever is later, according to § 63.7(a)(2)(ix).

(d) If you commenced construction or reconstruction between July 3, 2001 and [DATE OF PUBLICATION OF THE FINAL RULE IN THE **Federal Register**], and you chose to comply with the proposed emission limit when demonstrating initial compliance, you must conduct a second performance test to demonstrate compliance with the promulgated emission limit by [3 YEARS AND 180 DAYS FROM THE DATE OF PUBLICATION OF THE FINAL RULE IN THE **Federal Register**], or after startup of the source, whichever is later, according to § 63.7(a)(2)(ix).

§ 63.7321 When must I conduct subsequent performance tests?

For each control device subject to an emission limit for particulate matter in § 63.7290(a), you must conduct subsequent performance tests no less frequently than twice (at mid-term and renewal) during each term of your title V operating permit.

§ 63.7322 What test methods and other procedures must I use to demonstrate initial compliance with the emission limits for particulate matter?

(a) You must conduct each performance test that applies to your affected source according to the requirements in § 63.7(e)(1) and the conditions detailed in paragraph (b) of this section.

(b) To determine compliance with the emission limit of 0.004 gr/dscf for particulate matter from a control device applied to pushing emissions where a cokeside shed is the capture system, follow the test methods and procedures in paragraphs (b)(1) and (2) of this section. To determine compliance with a process-weighted mass rate of particulate matter (lb/ton of coke) from a control device applied to pushing emissions where a cokeside shed is not used, follow the test methods and procedures in paragraphs (b)(1) through (4) of this section.

(1) Determine the concentration of particulate matter according to the following test methods in appendix A of 40 CFR part 60.

(i) Method 1 to select sampling port locations and the number of traverse points. Sampling sites must be located at the outlet of the control device and prior to any releases to the atmosphere.

(ii) Method 2, 2F, or 2G to determine the volumetric flow rate of the stack gas.

(iii) Method 3, 3A, or 3B to determine the dry molecular weight of the stack gas.

(iv) Method 4 to determine the moisture content of the stack gas.

(v) Method 5 or 5D, as applicable, to determine the concentration of particulate matter in the stack gas.

(2) During each particulate matter test run, sample only during periods of actual pushing when the capture system fan and control device are engaged. Collect a minimum sample volume of 30 cubic feet of gas during each test run. Three valid test runs are needed to comprise a performance test. Each run must start at the beginning of a push and finish at the end of a push (i.e., sample for an integral number of pushes).

(3) Determine the total combined weight in tons of coke pushed during the duration of each test run according to the procedures in your source test plan for calculating coke yield from the quantity of coal charged to an individual oven.

(4) Compute the process-weighted mass emissions (E_p) for each test run using Equation 1 of this section as follows:

$$E_p = \frac{C \times Q \times T}{P \times K} \qquad \text{(Eq. 1)}$$

Where:

E_p = Process weighted mass emissions of particulate matter, lb/ton;

C = Concentration of particulate matter, gr/dscf;

Q = Volumetric flow rate of stack gas, dscf/hr;

T = Total time during a run that a sample is withdrawn from the stack during pushing, hr;

P = Total amount of coke pushed during the test run, tons; and

K = Conversion factor, 7,000 gr/lb.

§ 63.7323 What procedures must I use to establish operating limits?

(a) For a venturi scrubber applied to pushing emissions from a coke oven battery, you must establish site-specific operating limits for pressure drop and scrubber water flow rate according to the procedures in paragraphs (a)(1) and (2) of this section.

(1) Using the continuous parameter monitoring systems (CPMS) required in § 63.7330(b), measure and record the pressure drop and scrubber water flow rate for each particulate matter test run during periods of pushing. A minimum of one pressure drop measurement and one scrubber water flow rate measurement must be obtained for each push.

(2) Compute and record the average pressure drop and scrubber water flow rate for each test run. Your operating limits are the lowest average pressure drop and scrubber water flow rate values recorded for any push in any of the three runs that meet the applicable emission limit.

(b) For a capture system applied to pushing emissions from a coke oven battery, you must establish a site-specific operating limit for the fan motor amperes or volumetric flow rate according to the procedures in paragraph (b)(1) or (2) of this section.

(1) If you elect the operating limit in § 63.7290(b)(3)(i) for fan motor amperes, measure and record the fan motor amperes during each push sampled for each particulate matter test run. Your operating limit is the second lowest fan motor amperes recorded during any of the three runs that meets the emission limit.

(2) If you elect the operating limit in § 63.7290(b)(3)(ii) for volumetric flow rate, measure and record the total volumetric flow rate at the inlet of the control device during each push sampled for each particulate matter test run. Your operating limit is the second lowest volumetric flow rate recorded during any of the three runs that meets the emission limit.

(c) You may change the operating limit for a venturi scrubber or capture system if you meet the requirements in paragraphs (c)(1) through (3) of this section.

(1) Submit a written notification to the Administrator of your request to conduct a new performance test to revise the operating limit.

(2) Conduct a performance test to demonstrate that emissions of particulate matter from the control device do not exceed the applicable limit in § 63.7290(a).

(3) Establish revised operating limits according to the applicable procedures in paragraph (a) or (b) of this section.

§ 63.7324 What test methods and other procedures must I use to demonstrate initial compliance with the opacity limits?

(a) You must conduct each performance test that applies to your affected source according to the requirements in § 63.7(h)(5) and the conditions detailed in paragraphs (b) and (c) of this section.

(b) To determine compliance with the opacity limit of 20 percent for a short battery or 25 percent for a tall battery for fugitive pushing emissions (Option 1), follow the test methods and procedures in paragraphs (b)(1) through (4) of this section.

(1) Determine and record the opacity of fugitive emissions for four consecutive pushes per battery. If two or more batteries are served by the same pushing equipment and total no more than 60 ovens, the batteries as a unit can be considered a single battery. All observations and calculations for the initial performance test, compliance monitoring, and subsequent performance tests must be made by an independent Method 9 certified observer using Method 9 in appendix A of 40 CFR part 60.

(2) Begin observations for a push when the coke begins to fall into the quench car. End observations of a push when the quench car enters the quench tower. Remain stationary whenever possible while observing emissions during travel to the quench tower. Do not reposition after the push to observe emissions during travel.

(i) For a battery without a cokeside shed, observe fugitive pushing emissions from a position that provides an unobstructed view and avoids interferences from the topside of the battery at least 10 meters from the quench car. This usually requires the observer to be positioned at an angle to the quench car rather than perpendicular to it. Typical interferences to avoid include emissions from open standpipes and charging. Read the opacity of emissions above the battery top with the sky as the background where possible. Record any push not observed because of obstructions or interferences.

(ii) For batteries with a cokeside shed, the observer must be positioned to observe fugitive emissions that escape from the open end of the shed nearest to the oven being pushed. Observations must include any fugitive emissions that escape from the top of the shed or from the area where the shed is joined to the battery. If the observer does not have a clear view to identify when a push starts, a second observer must be positioned to observe the start of the push and notify the observer when to start the Method 9 readings. Radio communications with other plant personnel (e.g., pushing ram operator or quench car operator) may also serve to notify the observer of the start of a push. Record any push not observed because of obstructions or interferences.

(3) Record opacity observations to the nearest 5 percent at 15-second intervals as required in section 2.4 of Method 9 (40 CFR part 60, appendix A). The requirement in section 2.4 of Method 9 for a minimum of 24 observations does not apply, and the data reduction requirements in section 2.5 of Method 9 do not apply. The requirement in § 63.6(h)(5)(ii)(B) for obtaining at least 3 hours of observations (30, 6-minute averages) to demonstrate initial compliance does not apply.

(4) Calculate and record the average of the four consecutive pushes using the six highest consecutive 15-second readings for each push (or the actual number of readings if there are fewer than six readings).

(c) To determine compliance with the daily average opacity limit for stacks of 15 percent for a by-product coke oven battery on a normal coking cycle or 20 percent for a by-product coke oven battery on batterywide extended coking, follow the test methods and procedures in paragraphs (c)(1) through (3) of this section.

(1) Using the continuous opacity monitoring system (COMS) required in § 63.7330(d), measure and record the opacity of emissions from each battery stack for a 24-hour period.

(2) Reduce the monitoring data to hourly averages as specified in § 63.8(g)(2).

(3) Compute and record the 24-hour (daily) average of the COMS data.

§ 63.7325 How do I demonstrate initial compliance with the emission limitations that apply to me?

(a) For each coke oven battery subject to the emission limit for particulate matter from a control device applied to pushing emissions, you have demonstrated initial compliance if you meet the requirements in paragraphs (a)(1) through (3) of this section that apply to you.

(1) The concentration of particulate matter, measured in accordance with the performance test procedures in § 63.7322(b)(1) and (2), did not exceed 0.004 gr/dscf for a control device where a cokeside shed is used to capture pushing emissions or the process-weighted mass rate of particulate matter (lb/ton of coke), measured in accordance with the performance test procedures in § 63.7322(b)(1) through (4), did not exceed:

(i) 0.017 lb/ton of coke if a moveable hood vented to a stationary control device is used to capture emissions.

(ii) If a mobile scrubber car that does not capture emissions during travel is used, 0.023 lb/ton of coke from a control device applied to pushing emissions from a short coke oven battery or 0.010 lb/ton of coke from a control device applied to pushing emissions from a tall coke oven battery.

(iii) 0.039 lb/ton of coke if a mobile scrubber car that captures emissions during travel is used.

(2) For each venturi scrubber applied to pushing emissions, you have established appropriate site-specific operating limits and have a record of the pressure drop and scrubber water flow rate measured during the performance test in accordance with § 63.7323(a).

(3) For each capture system applied to pushing emissions, you have established an appropriate site-specific operating limit, and:

(i) If you elect the operating limit in § 63.7290(b)(3)(i) for fan motor amperes, you have a record of the fan motor amperes during the performance test in accordance with § 63.7323(b)(1); or

(ii) If you elect the operating limit in § 63.7290(b)(3)(ii) for volumetric flow rate, you have a record of the total volumetric flow rate at the inlet of the control device measured during the performance test in accordance with § 63.7323(b)(2).

(b) For each by-product coke oven battery with vertical flues subject to the opacity limit in § 63.7291(a) for fugitive pushing emissions (Option 1), you have demonstrated initial compliance if the average opacity of four consecutive pushes, calculated from the six highest consecutive 15-second readings (or the actual number if there are fewer than six readings) for each push, as determined using the performance test procedures in § 63.7324(b), is no more than 20 percent for a short battery or 25 percent for a tall battery.

(c) For each new or existing by-product coke oven battery subject to the opacity limit for stacks in § 63.7296(a), you have demonstrated initial compliance if the daily average opacity, as measured according to the performance test procedures in § 63.7324(c), is no more than 15 percent for a battery on a normal coking cycle or 20 percent for a battery on batterywide extended coking.

(d) For each emission limitation that applies to you, you must submit a notification of compliance status containing the results of the performance test according to § 63.7340(e).

§ 63.7326 How do I demonstrate initial compliance with the work practice standards that apply to me?

(a) For each by-product coke oven battery with vertical flues subject to the work practice standards for fugitive pushing emissions (Option 2) in § 63.7291(b), you have demonstrated initial compliance if you certify in your notification of compliance status that you will meet each of the work practice requirements.

(b) For each by-product coke oven battery with horizontal flues subject to the work practice standards for fugitive pushing emissions in § 63.7292(a), you have demonstrated initial compliance if you have met the requirements of paragraphs (b)(1) and (2) of this section:

(1) You have prepared and submitted a written plan and supporting documentation establishing appropriate minimum flue temperatures for different coking times and the lowest minimum temperature for which extended coking can be used to the applicable permitting authority for review and approval; and

(2) You certify in your notification of compliance status that you will meet each of the work practice requirements.

(c) For each non-recovery coke oven battery subject to the work practice standards for fugitive pushing emissions in § 63.7293(a), you have demonstrated initial compliance if you certify in your notification of compliance status that you will meet each of the work practice requirements.

(d) For each by-product coke oven battery subject to the work practice standard for soaking in § 63.7294(a), you have demonstrated initial compliance if you certify in your notification of compliance status that you will meet each of the work practice requirements.

(e) For each coke oven battery, you have demonstrated initial compliance with the work practice standards for quenching in § 63.7295(a) if you certify in your notification of compliance status that you have met the requirements of paragraphs (e)(1) and (2) of this section:

(1) You have installed the required equipment in each quench tower; and

(2) You will meet each of the work practice requirements.

(f) For each work practice standard that applies to you, you must submit a notification of compliance status according to the requirements in § 3.7340(e).

§ 63.7327 How do I demonstrate initial compliance with the operation and maintenance requirements that apply to me?

(a) You have demonstrated initial compliance if you certify in your notification of compliance status that you have met the requirements of paragraphs (a)(1) through (3) of this section:

(1) You have prepared the operation and maintenance plans according to the requirements in § 63.7300(b) and (c);

(2) You will operate each by-product coke oven battery and each capture system and control device applied to pushing emissions from a coke oven battery according to the procedures in the plans; and

(3) You submit a notification of compliance status according to the requirements in § 63.7340(e).

(b) [Reserved]

§§ 63.7328–63.7329 [Reserved]

Continuous Compliance Requirements

§ 63.7330 What are my monitoring requirements?

(a) For each baghouse applied to pushing emissions from a coke oven battery, you must at all times monitor the relative change in particulate matter loadings using a bag leak detection system according to the requirements in § 63.7331(a) and conduct inspections at their specified frequency according to the requirements in paragraphs (a)(1) through (8) of this section.

(1) Monitor the pressure drop across each baghouse cell each day to ensure pressure drop is within the normal operating range identified in the manual;

(2) Confirm that dust is being removed from hoppers through weekly visual inspections or equivalent means of ensuring the proper functioning of removal mechanisms;

(3) Check the compressed air supply for pulse-jet baghouses each day;

(4) Monitor cleaning cycles to ensure proper operation using an appropriate methodology;

(5) Check bag cleaning mechanisms for proper functioning through monthly visual inspection or equivalent means;

(6) Make monthly visual checks of bag tension on reverse air and shaker-type baghouses to ensure that bags are not kinked (kneed or bent) or laying on their sides. You do not have to make this check for shaker-type baghouses using self-tensioning (spring-loaded) devices;

(7) Confirm the physical integrity of the baghouse through quarterly visual inspections of the baghouse interior for air leaks; and

(8) Inspect fans for wear, material buildup, and corrosion through quarterly visual inspections, vibration detectors, or equivalent means.

(b) For each venturi scrubber applied to pushing emissions from a coke oven battery, you must at all times monitor the pressure drop and water flow rate using a CPMS according to the requirements in § 63.7331(b).

(c) For each capture system applied to pushing emissions, you must at all times monitor the fan motor amperes according to the requirements in § 63.7331(c) or the volumetric flow rate according to the requirements in § 63.7331(d).

(d) For each by-product coke oven battery, you must monitor at all times the opacity of emissions exiting each stack using a COMS according to the requirements in § 63.7331(e).

§ 63.7331 What are the installation, operation, and maintenance requirements for my monitors?

(a) For each baghouse applied to pushing emissions from a coke oven battery, you must install, operate, and maintain each bag leak detection system according to the requirements in paragraphs (a)(1) through (7) of this section.

(1) The system must be certified by the manufacturer to be capable of detecting emissions of particulate matter at concentrations of 10 milligrams per actual cubic meter (0.0044 grains per actual cubic foot) or less;

(2) The system must provide output of relative changes in particulate matter loadings;

(3) The system must be equipped with an alarm that will sound when an increase in relative particulate loadings is detected over a preset level. The alarm must be located such that it can be heard by the appropriate plant personnel;

(4) Each system that works based on the triboelectric effect must be installed, operated, and maintained in a manner consistent with the guidance document, ''Fabric Filter Bag Leak Detection Guidance'' (EPA–454/R–98–015), September 1997. You may install, operate, and maintain other types of bag leak detection systems in a manner consistent with the manufacturer's written specifications and recommendations;

(5) To make the initial adjustment of the system, establish the baseline output by adjusting the sensitivity (range) and the averaging period of the device. Then, establish the alarm set points and the alarm delay time;

(6) Following the initial adjustment, do not adjust the sensitivity or range, averaging period, alarm set points, or alarm delay time, except as detailed in your operation and maintenance plan. Do not increase the sensitivity by more than 100 percent or decrease the sensitivity by more than 50 percent over a 365-day period unless a responsible official certifies, in writing, that the baghouse has been inspected and found to be in good operating condition; and

(7) Where multiple detectors are required, the system's instrumentation and alarm may be shared among detectors.

(b) For each venturi scrubber applied to pushing emissions from a coke oven battery, you must install, operate, and maintain CPMS to measure and record the pressure drop across the scrubber and scrubber water flow rate during each push according to the requirements in paragraphs (b)(1) through (3) of this section.

(1) For the pressure drop CPMS, you must:

(i) Locate the pressure sensor(s) in or as close to a position that provides a representative measurement of the pressure and that minimizes or eliminates pulsating pressure, vibration, and internal and external corrosion;

(ii) Use a gauge with a minimum measurement sensitivity of 0.5 inch of water or a transducer with a minimum measurement sensitivity of 1 percent of the pressure range;

(iii) Check the pressure tap for pluggage daily;

(iv) Using a manometer, check gauge calibration quarterly and transducer calibration monthly;

(v) Conduct calibration checks any time the sensor exceeds the manufacturer's specified maximum operating pressure range, or install a new pressure sensor; and

(vi) At least monthly, inspect all components for integrity, all electrical connections for continuity, and all mechanical connections for leakage.

(2) For the scrubber water flow rate CPMS, you must:

(i) Locate the flow sensor and other necessary equipment in a position that provides a representative flow and that reduces swirling flow or abnormal velocity distributions due to upstream and downstream disturbances;

(ii) Use a flow sensor with a minimum measurement sensitivity of 2 percent of the flow rate;

(iii) Conduct a flow sensor calibration check at least semiannually according to the manufacturer's instructions; and

(iv) At least monthly, inspect all components for integrity, all electrical connections for continuity, and all mechanical connections for leakage.

(3) You must install, operate, and maintain each venturi scrubber CPMS according to the requirements in paragraphs (b)(3)(i) through (iii) of this section.

(i) Each CPMS must complete a measurement at least once per push;

(ii) Each CPMS must produce valid data for all pushes; and

(iii) Each CPMS must determine and record the daily (24-hour) average of all recorded readings.

(c) If you elect the operating limit in § 63.7390(b)(3)(i) for a capture system applied to pushing emissions from a coke oven battery, you must install, operate, and maintain a device to measure the fan motor amperes.

(d) If you elect the operating limit in § 63.7390(b)(3)(ii) for a capture system applied to pushing emissions from a coke oven battery, you must install, operate, and maintain a device to measure the total volumetric flow rate at the inlet of the control device.

(e) For each by-product coke oven battery, you must install, operate, and maintain a COMS to measure and record the opacity of emissions exiting each stack according to the requirements in paragraphs (e)(1) through (4) of this section.

(1) You must install each COMS and conduct a performance evaluation of each COMS according to the requirements in § 63.8 and Performance Specification 1 in appendix B of 40 CFR part 60;

(2) You must develop and implement a quality control program for operating and maintaining each COMS according to the requirements in § 63.8(d). At minimum, the quality control program must include a daily calibration drift assessment, quarterly performance audit, and an annual zero alignment audit of each COMS;

(3) You must operate and maintain each COMS according to the requirements in § 63.8(e). Identify periods the COMS is out-of-control, including any periods that the COMS fails to pass a daily calibration drift assessment, quarterly performance audit, or annual zero alignment audit; and

(4) You must determine and record the hourly and daily (24-hour) average opacity according to the procedures in § 63.7324(c) using all the 6-minute averages collected for periods during which the COMS is not out-of-control.

§ 63.7332 How do I monitor and collect data to demonstrate continuous compliance?

(a) Except for monitor malfunctions, associated repairs, and required quality assurance or control activities (including as applicable, calibration checks and required zero and span adjustments), you must monitor continuously (or collect data at all required intervals) at all times the affected source is operating.

(b) You may not use data recorded during monitoring malfunctions, associated repairs, and required quality assurance or control activities in data averages and calculations used to report emission or operating levels, or in fulfilling a minimum data availability requirement, if applicable. You must use all the data collected during all other periods in assessing compliance. A monitoring malfunction is any sudden, infrequent, not reasonably preventable failure of the monitor to provide valid data. Monitoring failures that are caused in part by poor maintenance or careless operation are not malfunctions.

§ 63.7333 How do I demonstrate continuous compliance with the emission limitations that apply to me?

(a) For each control device applied to pushing emissions from a coke oven battery and subject to the emission limit in § 63.7290(a), you must demonstrate continuous compliance by:

(1) Maintaining emissions of particulate matter at or below the applicable limits in paragraphs (a)(1)(i) through (iv) of this section.

(i) 0.004 gr/dscf if a cokeside shed is used to capture emissions;

(ii) 0.017 lb/ton of coke if a moveable hood vented to a stationary control device is used to capture emissions;

(iii) If a mobile scrubber car that does not capture emissions during travel is used, 0.023 lb/ton of coke from a control device applied to pushing emissions from a short coke oven battery or 0.010 lb/ton of coke from a control device applied to pushing emissions from a tall coke oven battery; and

(iv) 0.039 lb/ton of coke if a mobile scrubber car that captures emissions during travel is used.

(2) Conducting subsequent performance tests to demonstrate continuous compliance no less frequently than twice (at mid-term and renewal) during each term of your title V operating permit.

(b) For each baghouse applied to pushing emissions from a coke oven battery and subject to the operating limit in § 63.7290(b)(1), you must demonstrate continuous compliance by having met the requirements of paragraphs (b)(1) through (3) of this section:

(1) Maintaining each baghouse such that the bag leak detection system alarm does not sound for more than 5 percent of the operating time during any semiannual reporting period. Follow the procedures in paragraphs (b)(1)(i) through (v) of this section to determine the percent of time the alarm sounded.

(i) Alarms that occur due solely to a malfunction of the bag leak detection system are not included in the calculation.

(ii) Alarms that occur during startup, shutdown, or malfunction are not included in the calculation if the condition is described in the startup, shutdown, and malfunction plan and all the actions you took during the startup, shutdown, or malfunction were consistent with the procedures in the startup, shutdown, and malfunction plan.

(iii) Count 1 hour of alarm time for each alarm when you initiated procedures to determine the cause of the alarm within 1 hour.

(iv) Count the actual amount of time you took to initiate procedures to determine the cause of the alarm if you did not initiate procedures to determine the cause of the alarm within 1 hour of the alarm.

(v) Calculate the percentage of time the alarm on the bag leak detection system sounds as the ratio of the sum of alarm times to the total operating time multiplied by 100.

(2) Maintaining records of the times the bag leak detection system alarm sounded, and for each valid alarm, the time you initiated corrective action, the corrective action(s) taken, and the date on which corrective action was completed.

(3) Inspecting and maintaining each baghouse according to the requirements in § 63.7330(a)(1) through (8) and recording all information needed to document conformance with these requirements. If you increase or decrease the sensitivity of the bag leak detection system beyond the limits specified in § 63.7331(a)(6), you must include a copy of the required written certification by a responsible official in the next semiannual compliance report.

(c) For each venturi scrubber applied to pushing emissions from a coke oven battery and subject to the operating limits in § 63.7290(b)(2), you must demonstrate continuous compliance by having met the requirements of paragraphs (c)(1) through (3) of this section:

(1) Maintaining the daily average pressure drop and scrubber water flow rate at levels no lower than those established during the initial or subsequent performance test;

(2) Inspecting and maintaining each CPMS according to § 63.7331(b)(1) and (2) and recording all information needed to document conformance with these requirements; and

(3) Collecting and reducing monitoring data for pressure drop and scrubber water flow rate according to § 63.7331(b)(3).

(d) For each capture system applied to pushing emissions from a coke oven battery and subject to the operating limit in § 63.7290(b)(3), you must demonstrate continuous compliance by having met the requirements of paragraphs (d)(1) and (2) of this section:

(1) If you elect the operating limit for fan motor amperes in § 63.7290(b)(3)(i):

(i) Maintaining the fan motor amperes at or above the minimum level established during the initial or subsequent performance test; and

(ii) Checking the fan motor amperes at least every 8 hours to verify the amperes are at or above the minimum level established during the initial or

subsequent performance test and recording the results of each check.

(2) If you elect the operating limit for volumetric flow rate in § 63.7290(b)(3)(ii):

(i) Maintaining the volumetric flow rate at the inlet of the control device at or above the minimum level established during the initial or subsequent performance test; and

(ii) Checking the volumetric flow rate at least every 8 hours to verify the volumetric flow rate is at or above the minimum level established during the initial or subsequent performance test and recording the results of each check.

(e) For each by-product coke oven battery with vertical flues subject to the opacity limit for fugitive pushing emissions (Option 1) in § 63.7291(a), you must demonstrate continuous compliance by having met the requirements of paragraphs (c)(1) and (2) of this section:

(1) Maintaining the daily average opacity of fugitive emissions at no more than 20 percent for a short battery or 25 percent for a tall battery; and

(2) Determining and recording the opacity of fugitive emissions for four consecutive pushes per operating day according to the performance test procedures in § 63.7324(b), and ensuring that each oven in an affected battery is observed at least once every 3 months.

(f) For each by-product coke oven battery subject to the opacity limit for stacks in § 63.7296(a), you must demonstrate continuous compliance by having met the requirements of paragraphs (f)(1) and (2) of this section:

(1) Maintaining the daily average opacity at or below 15 percent for a battery on a normal coking cycle or 20 percent for a battery on batterywide extended coking; and

(2) Operating and maintaining a COMS and collecting and reducing the COMS data according to § 63.7331(e).

§ 63.7334 How do I demonstrate continuous compliance with the work practice standards that apply to me?

(a) For each by-product coke oven battery with vertical flues subject to the work practice standards for fugitive pushing emissions (Option 2) in § 63.7291(b), you must demonstrate continuous compliance by having met the requirements of paragraphs (a)(1) and (2) of this section:

(1) Determining and recording the opacity of fugitive emissions for four consecutive pushes per operating day according to the procedures in § 63.7324(b)(1) through (3), and ensuring that each oven in an affected battery is observed at least once every 3 months; and

(2) Assigning each oven observed that exceeds the opacity trigger of 30 percent for any short battery or 35 percent for any tall battery to the oven-directed program and recording all relevant information according to the requirements in § 63.7291(b)(5) through (11), including but not limited to, daily pushing schedules, records of diagnostic procedures, corrective actions, and oven repairs.

(b) For each by-product coke oven battery with horizontal flues subject to the work practice standards for fugitive pushing emissions in § 63.7292(a), you must demonstrate continuous compliance by having met the requirements of paragraphs (b)(1) through (3) of this section:

(1) Measuring and recording the temperature of all flues on two ovens per day within 2 hours of the oven's scheduled pushing time and ensuring that the temperature of each oven is measured and recorded at least once every month;

(2) Recording the time each oven is charged and pushed and calculating and recording the net coking time for each oven; and

(3) Extending the coking time for each oven that falls below the minimum flue temperature trigger established for that oven's coking time in the written plan required in § 63.7292(a)(1), assigning the oven to the oven-directed program, and recording all relevant information according to the requirements in § 63.7292(a)(6) including, but not limited to, daily pushing schedules, diagnostic procedures, corrective actions, and oven repairs.

(c) For each non-recovery coke oven battery subject to the work practice standards in § 63.7293(a), you must demonstrate continuous compliance by maintaining records that document each visual inspection of an oven prior to pushing and that the oven was not pushed unless there was no smoke in the open space above the coke bed and there was an unobstructed view of the door on the opposite side of the oven.

(d) For each by-product coke oven battery subject to the work practice standard for soaking in § 63.7294(a), you must demonstrate continuous compliance by maintaining records that document the automatic or manual ignition of vented gases from each standpipe. If the vented gases do not ignite automatically, the records must include the time the standpipe cap is opened and the time the vented gases are manually ignited.

(e) For each coke oven battery, you must demonstrate continuous compliance with the work practice standard for quenching in § 63.7295(a) by having met the requirements of paragraphs (e)(1) and (2) of this section:

(1) Maintaining baffles in each quench tower such that at least 95 percent of the cross-sectional area of the tower is covered as required in § 63.7295(a)(1); and

(2) Maintaining records that document conformance with the washing, inspection, and repair requirements in § 63.7295(a)(2) through (4).

§ 63.7335 How do I demonstrate continuous compliance with the operation and maintenance requirements that apply to me?

(a) For each by-product coke oven battery, you must demonstrate continuous compliance with the operation and maintenance requirements in § 63.7300(b) by adhering at all times to the plan requirements and recording all information needed to document conformance.

(b) For each coke oven battery with a capture system or control device applied to pushing emissions, you must demonstrate continuous compliance with the operation and maintenance requirements in § 63.7300(c) by meeting the requirements of paragraphs (b)(1) through (3) of this section:

(1) Making monthly inspections of capture systems according to § 63.7300(c)(1) and recording all information needed to document conformance with these requirements;

(2) Performing preventative maintenance for each control device according to § 63.7300(c)(2) and recording all information needed to document conformance with these requirements; and

(3) Initiating and completing corrective action for a bag leak detection system alarm according to § 63.7300(c)(3) and recording all information needed to document conformance with these requirements.

(c) You must maintain a current copy of the operation and maintenance plans required in § 63.7300(b) and (c) onsite and available for inspection upon request. You must keep the plans for the life of the affected source or until the affected source is no longer subject to the requirements of this subpart.

§ 63.7336 What other requirements must I meet to demonstrate continuous compliance?

(a) *Deviations.* You must report each instance in which you did not meet each emission limitation in this subpart that applies to you. This includes periods of startup, shutdown, and malfunction. You must also report each instance in which you did not meet

each work practice standard or operation and maintenance requirement in this subpart that applies to you. These instances are deviations from the emission limitations (including operating limits), work practice standards, and operation and maintenance requirements in this subpart. These deviations must be reported according to the requirements in § 63.7341.

(b) *Startup, shutdowns, and malfunctions.* During periods of startup, shutdown, and malfunction, you must operate in accordance with your startup, shutdown, and malfunction plan.

(1) Consistent with §§ 63.6(e) and 63.7(e)(1), deviations that occur during a period of startup, shutdown, or malfunction are not violations if you demonstrate to the Administrator's satisfaction that you were operating in accordance with the startup, shutdown, and malfunction plan.

(2) The Administrator will determine whether deviations that occur during a period of startup, shutdown, or malfunction are violations, according to the provisions in § 63.6(e).

§§ 63.7337–63.7339 [Reserved]

Notification, Reports, and Records

§ 63.7340 What notifications must I submit and when?

(a) You must submit all of the notifications in §§ 63.6(h)(4) and (h)(5), 63.7(b) and (c), 63.8(e) and (f)(4), and 63.9(b) through (h) that apply to you by the specified dates.

(b) As specified in § 63.9(b)(2), if you startup your affected source before [DATE OF PUBLICATION OF THE FINAL RULE IN THE **Federal Register**], you must submit your initial notification no later than [120 DAYS FROM THE DATE OF PUBLICATION OF THE FINAL RULE IN THE **Federal Register**].

(c) As specified in § 63.9(b)(3), if you startup your new affected source on or after [DATE OF PUBLICATION OF THE FINAL RULE IN THE **Federal Register**], you must submit your initial notification no later than 120 calendar days after you become subject to this subpart.

(d) If you are required to conduct a performance test, you must submit a notification of intent to conduct a performance test at least 60 calendar days before the performance test is scheduled to begin as required in § 63.7(b)(1).

(e) If you are required to conduct a performance test, opacity observation, or other initial compliance demonstration, you must submit a notification of compliance status according to § 63.9(h)(2)(ii).

(1) For each initial compliance demonstration that does not include a performance test, you must submit the notification of compliance status before the close of business on the 30th calendar day following the completion of the initial compliance demonstration.

(2) For each initial compliance demonstration that does include a performance test, you must submit the notification of compliance status, including the performance test results, before the close of business on the 60th calendar day following completion of the performance test according to § 63.10(d)(2).

§ 63.7341 What reports must I submit and when?

(a) *Compliance report due dates.* Unless the Administrator has approved a different schedule, you must submit monthly compliance reports for battery stacks and semiannual compliance reports for all other affected sources to your permitting authority according to the requirements in paragraphs (a)(1) through (4) of this section.

(1) The first monthly compliance report for battery stacks must cover the period beginning on the compliance date that is specified for your affected source in § 63.7283 and ending on the last date of the same calendar month. Each subsequent compliance report must cover the next calendar month.

(2) The first semiannual compliance report must cover the period beginning on the compliance date that is specified for your affected source in § 63.7283 and ending on June 30 or December 31, whichever date comes first after the compliance date that is specified for your affected source. Each subsequent compliance report must cover the semiannual reporting period from January 1 through June 30 or the semiannual reporting period from July 1 through December 31.

(3) All monthly compliance report for battery stacks must be postmarked or delivered no later than one calendar month following the end of the monthly reporting period. All semiannual compliance reports must be postmarked or delivered no later than July 31 or January 31, whichever date is the first date following the end of the semiannual reporting period.

(4) For each affected source that is subject to permitting regulations pursuant to 40 CFR part 70 or 71, and if the permitting authority has established dates for submitting semiannual reports pursuant to 40 CFR 70.6(a)(3)(a)(iii)(A) or 40 CFR 71.6(a)(3)(iii)(A), you may submit the first and subsequent compliance reports according to the dates the permitting authority has established instead of according to the dates in paragraphs (a)(1) through (3) of this section.

(b) *Monthly compliance report contents.* Each monthly report must provide information on compliance with the emission limitations for battery stacks in § 63.7296. The reports must include the information in paragraphs (c)(1) through (3), and as applicable, paragraphs (c)(4) through (8) of this section.

(c) *Semiannual compliance report contents.* Each compliance report must provide information on compliance with the emission limitations, work practice standards, and operation and maintenance requirements for all affected sources except battery stacks. The reports must include the information in paragraphs (c)(1) through (3) of this section, and as applicable, paragraphs (c)(4) through (8) of this section.

(1) Company name and address.

(2) Statement by a responsible official, with the official's name, title, and signature, certifying the truth, accuracy, and completeness of the content of the report.

(3) Date of report and beginning and ending dates of the reporting period.

(4) If you had a startup, shutdown, or malfunction during the reporting period and you took actions consistent with your startup, shutdown, and malfunction plan, the compliance report must include the information in § 63.10(d)(5)(i).

(5) If there were no deviations from the continuous compliance requirements in § 63.7333(f) for battery stacks, a statement that there were no deviations from the emission limitations during the reporting period. If there were no deviations from the continuous compliance requirements in §§ 63.7333 through 63.7335 that apply to you (for all affected sources other than battery stacks), a statement that there were no deviations from the emission limitations, work practice standards, or operation and maintenance requirements during the reporting period.

(6) If there were no periods during which a continuous monitoring system (including COMS, continuous emission monitoring system (CEMS), or CPMS) was out-of-control as specified in § 63.8(c)(7), a statement that there were no periods during which a continuous monitoring system was out-of-control during the reporting period.

(7) For each deviation from an emission limitation in this subpart and for each deviation from the

requirements for work practice standards in this subpart that occurs at an affected source where you are not using a continuous monitoring system (including a COMS, CEMS, or CPMS) to comply with the emission limitations in this subpart, the compliance report must contain the information in paragraphs (c)(4) and (c)(7)(i) and (ii) of this section. This includes periods of startup, shutdown, and malfunction.

(i) The total operating time of each affected source during the reporting period.

(ii) Information on the number, duration, and cause of deviations (including unknown cause, if applicable) as applicable and the corrective action taken.

(8) For each deviation from an emission limitation occurring at an affected source where you are using a continuous monitoring system (including COMS, CEMS, or CPMS) to comply with the emission limitation in this subpart, you must include the information in paragraphs (c)(4) and (c)(8)(i) through (xii) of this section. This includes periods of startup, shutdown, and malfunction.

(i) The date and time that each malfunction started and stopped.

(ii) The date and time that each continuous monitoring system (including COMS, CEMS, or CPMS) was inoperative, except for zero (low-level) and high-level checks.

(iii) The date, time, and duration that each continuous monitoring system (including COMS, CEMS, or CPMS) was out-of-control, including the information in § 63.8(c)(8).

(iv) The date and time that each deviation started and stopped, and whether each deviation occurred during a period of startup, shutdown, or malfunction or during another period.

(v) A summary of the total duration of the deviation during the reporting period and the total duration as a percent of the total source operating time during that reporting period.

(vi) A breakdown of the total duration of the deviations during the reporting period into those that are due to startup, shutdown, control equipment problems, process problems, other known causes, and other unknown causes.

(vii) A summary of the total duration of continuous monitoring system downtime during the reporting period and the total duration of continuous monitoring system downtime as a percent of the total source operating time during the reporting period.

(viii) An identification of each HAP that was monitored at the affected source.

(ix) A brief description of the process units.

(x) A brief description of the continuous monitoring system.

(xi) The date of the latest continuous monitoring system certification or audit.

(xii) A description of any changes in continuous monitoring systems, processes, or controls since the last reporting period.

(d) *Immediate startup, shutdown, and malfunction report.* If you had a startup, shutdown, or malfunction during the semiannual reporting period that was not consistent with your startup, shutdown, and malfunction plan, you must submit an immediate startup, shutdown, and malfunction report according to the requirements in § 63.10(d)(5)(ii).

(e) *Part 70 monitoring report.* If you have obtained a title V operating permit for an affected source pursuant to 40 CFR part 70 or 71, you must report all deviations as defined in this subpart in the semiannual monitoring report required by 40 CFR 70.6(a)(3)(iii)(A) or 40 CFR 71.6(a)(3)(iii)(A). If you submit a compliance report for an affected source along with, or as part of, the semiannual monitoring report required by 40 CFR 70.6(a)(3)(iii)(A) or 40 CFR 71.6(a)(3)(iii)(A), and the compliance report includes all the required information concerning deviations from any emission limitation or work practice standard in this subpart, submission of the compliance report satisfies any obligation to report the same deviations in the semiannual monitoring report. However, submission of a compliance report does not otherwise affect any obligation you may have to report deviations from permit requirements to your permitting authority.

§ 63.7342 What records must I keep?

(a) You must keep the records specified in paragraphs (a)(1) through (3) of this section.

(1) A copy of each notification and report that you submitted to comply with this subpart, including all documentation supporting any initial notification or notification of compliance status that you submitted, according to the requirements in § 63.10(b)(2)(xiv).

(2) The records in § 63.6(e)(3)(iii) through (v) related to startup, shutdown, and malfunction.

(3) Records of performance tests, performance evaluations, and opacity observations as required in § 63.10(b)(2)(viii).

(b) For each COMS or CEMS, you must keep the records specified in paragraphs (b)(1) through (4) of this section.

(1) Records described in § 63.10(b)(2)(vi) through (xi).

(2) Monitoring data for COMS during a performance evaluation as required in § 63.6(h)(7)(i) and (ii).

(3) Previous (that is, superceded) versions of the performance evaluation plan as required in § 63.8(d)(3).

(4) Records of the date and time that each deviation started and stopped, and whether the deviation occurred during a period of startup, shutdown, or malfunction or during another period.

(c) You must keep the records in § 63.6(h)(6) for visual observations.

(d) You must keep the records required in §§ 63.7333 through 63.7335 to show continuous compliance with each emission limitation, work practice standard, and operation and maintenance requirement that applies to you.

§ 63.7343 In what form and how long must I keep my records?

(a) You must keep your records in a form suitable and readily available for expeditious review, according to § 63.10(b)(1).

(b) As specified in § 63.10(b)(1), you must keep each record for 5 years following the date of each occurrence, measurement, maintenance, corrective action, report, or record.

(c) You must keep each record on site for at least 2 years after the date of each occurrence, measurement, maintenance, corrective action, report, or record, according to § 63.10(b)(1). You can keep the records offsite for the remaining 3 years.

§§ 63.7344–63.7349 [Reserved]

Other Requirements and Information

§ 63.7350 What parts of the General Provisions apply to me?

Table 1 to this subpart shows which parts of the General Provisions in §§ 63.1 through 63.15 apply to you.

§ 63.7351 Who implements and enforces this subpart?

(a) This subpart can be implemented and enforced by us, the U.S. EPA, or a delegated authority such as your State, local, or tribal agency. If the U.S. EPA Administrator has delegated authority to your State, local, or tribal agency, then that agency has the authority to implement and enforce this subpart. You should contact your U.S. EPA Regional Office to find out if this subpart is delegated to your State, local, or tribal agency.

(b) In delegating implementation and enforcement authority of this subpart to a State, local, or tribal agency under subpart E of this part, the authorities

contained in paragraph (c) of this section are retained by the Administrator of the U.S. EPA and are not transferred to the State, local, or tribal agency.

(c) The authorities in paragraphs (c)(1) through (5) of this section will not be delegated to State, local, or tribal agencies.

(1) Approval of alternatives to work practice standards for fugitive pushing emissions (Option 2) in § 63.7291(b) for a by-product coke oven battery with vertical flues, fugitive pushing emissions in § 63.7292(a) for a by-product coke oven battery with horizontal flues, fugitive pushing emissions in § 63.7293 for a non-recovery coke oven battery, soaking for a by-product coke oven battery in § 63.7294(a), and quenching for a coke oven battery in § 63.7295(a) under § 63.6(g).

(2) Approval of alternative opacity emission limitations for fugitive pushing emissions (Option 1) in § 63.7291(a) and battery stacks in § 63.7296(a) for a by-product coke oven battery under § 63.6(h)(9).

(3) Approval of major alternatives to test methods under § 63.7(e)(2)(ii) and (f) and as defined in § 63.90.

(4) Approval of major alternatives to monitoring under § 63.8(f) and as defined in § 63.90.

(5) Approval of major alternatives to recordkeeping and reporting under § 63.10(f) and as defined in § 63.90.

§ 63.7352 What definitions apply to this subpart?

Terms used in this subpart are defined in the Clean Air Act (CAA), in § 63.2, and in this section as follows:

Baffles means an apparatus comprised of obstructions for checking or deflecting the flow of gases. Baffles are installed in a quench tower to remove droplets of water and particles from the rising vapors by providing a point of impact. Baffles may be installed either inside or on top of quench towers and are typically constructed of treated wood, steel, or plastic.

Battery stack means the stack that is the point of discharge to the atmosphere of the combustion gases from a battery's underfiring system.

Batterywide extended coking means increasing the average coking time for all ovens in the coke oven battery by 25 percent or more over the normal coking time.

By-product coke oven battery means a group of ovens connected by common walls, where coal undergoes destructive distillation under positive pressure to produce coke and coke oven gas from which by-products are recovered.

Clean water means surface water from a river, lake, or stream; water meeting drinking water standards; water that has been used for non-contact cooling; or process wastewater that has been treated to remove organic compounds and/or dissolved solids.

Coke oven battery means a group of ovens connected by common walls, where coal undergoes destructive distillation to produce coke. A coke oven battery includes by-product and non-recovery processes.

Coke plant means a facility that produces coke from coal in either a by-product coke oven battery or a non-recovery coke oven battery.

Cokeside shed means a structure used to capture pushing emissions that encloses the cokeside of the battery and ventilates the emissions to a control device.

Coking time means the time interval that starts when an oven is charged with coal and ends when the oven is pushed.

Deviation means any instance in which an affected source subject to this subpart, or an owner or operator of such a source:

(1) Fails to meet any requirement or obligation established by this subpart, including but not limited to any emission limitation (including operating limits) or work practice standard;

(2) Fails to meet any term or condition that is adopted to implement an applicable requirement in this subpart and that is included in the operating permit for any affected source required to obtain such a permit; or

(3) Fails to meet any emission limitation or work practice standard in this subpart during startup, shutdown, or malfunction, regardless of whether or not such failure is permitted by this subpart.

Emission limitation means any emission limit, opacity limit, or operating limit.

Extended coking means increasing the charge-to-push time for an individual oven.

Four consecutive pushes means four pushes observed successively. Exclude any push during which the observer's view is obstructed or obscured by interferences, and observe the next available push to complete the set of four pushes.

Fugitive pushing emissions means emissions from pushing that are not collected by a capture system.

Horizontal flue means a type of coke oven heating system used on Semet-Solvay batteries where the heating flues run horizontally from one end of the oven to the other end, and the flues are not shared with adjacent ovens.

Independent certified observer means a visible emission observer certified to perform opacity observations under EPA Method 9 in appendix A of 40 CFR part 60 that is not an employee of or consultant to the owner or operator of the coke plant or coke oven battery.

Non-recovery coke oven battery means a group of ovens connected by common walls and operated as a unit, where coal undergoes destructive distillation under negative pressure to produce coke, and which is designed for the combustion of the coke oven gas from which by-products are not recovered.

Normal coking time means the batterywide coking time that is representative of routine operation.

Oven means a chamber in the coke oven battery in which coal undergoes destructive distillation to produce coke.

Pushing means the process of removing the coke from the oven. Pushing begins when coke first begins to fall from the oven into the quench car and ends when the quench car enters the quench tower.

Quenching means the wet process of cooling (wet quenching) the hot incandescent coke by direct contact with water that begins when the quench car enters the quench tower and ends when the quench car exits the quench tower.

Quench tower means the structure in which hot incandescent coke in the quench car is deluged or quenched with water.

Remove from service means that an oven is not charged with coal and is not used for coking. When removed from service, the oven may remain at the operating temperature or it may be cooled down for extensive repairs.

Responsible official means responsible official as defined in § 63.2.

Short battery means a by-product coke oven battery with ovens less than five meters in height.

Soaking means that period in the coking cycle that starts when an oven is dampered off the collecting main and vented to the atmosphere through an open standpipe prior to pushing and ends when the coke begins to be pushed from the oven.

Standpipe means an apparatus on the oven that provides a passage for gases from an oven to the collecting main or to the atmosphere when the oven is dampered off the collecting main and the standpipe cap is opened.

Tall battery means a by-product coke oven battery with ovens five meters or more in height.

Vertical flue means a type of coke oven heating system in which the heating flues run vertically from the

bottom to the top of the oven, and flues are shared between adjacent ovens.

Work practice standard means any design, equipment, work practice, or operational standard, or combination thereof, that is promulgated pursuant to section 112(h) of the CAA.

§§ 63.7353–63.7359 [Reserved]

Tables to Subpart CCCCC

Table 1 to Subpart CCCCC. Applicability of General Provisions to Subpart CCCCC

As required in § 63.7350, you must comply with each applicable requirement of the NESHAP General Provisions (40 CFR part 63, subpart A) as shown in the following table:

Citation	Subject	Applies to Subpart CCCCC?	Explanation
§ 63.1	Applicability	Yes.	
§ 63.2	Definitions	Yes.	
§ 63.3	Units and Abbreviations	Yes.	
§ 63.4	Prohibited Activities	Yes.	
§ 63.5	Construction/Reconstruction	Yes.	
§ 63.6(a), (b), (c), (d), (e), (f), (g), (h)(2)(ii)–(8).	Compliance with Standards and Maintenance Requirements.	Yes.	
§ 63.6(h)(2)(i)	Determining Compliance with Opacity and VE Standards.	No	Subpart CCCCC specifies Method 9 (40 CFR Part 60) for determining the opacity of fugitive emissions from pushing under Option 1 for proposal.
§ 63.6(h)(9)	Adjustment to an Opacity Emission Standard.	Yes	Except subpart CCCCC specifies additional information to be submitted.
§ 63.7(a)(3), (b), (c)–(h)	Performance Testing Requirements	Yes.	
§ 63.7(a)(1)–(2)	Applicability and Performance Test Dates.	No	Subpart CCCCC specifies applicability and dates.
§ 63.8(a)(1)–(3), (b), (c)(1)–(3), (c)(4)(i)–(ii), (c)(5)–(8), (f) (1)–(5), (g) (1)–(4).	Monitoring Requirements	Yes	CMS requirements in § 63.8(c)(4)(i)–(ii),(c)(5), (c)(6), (d), and (e) apply only to COMS for battery stacks.
§ 63.8(a)(4)	Additional Monitoring Requirements for Control Devices in § 63.11.	No	Flares are not a control device for Subpart CCCCC affected sources.
§ 63.8(c)(4)	Continuous Monitoring System (CMS) Requirements.	No	Subpart CCCCC specifies requirements for operation of CMS.
§ 63.8(f)(6)	RATA Alternative	No	Subpart CCCCC does not require CEMS.
§ 63.8(g)(5)	Data Reduction	No	Subpart CCCCC specifies data that can't be used in computing averages for COMS.
§ 63.9	Notification Requirements	Yes	Additional notifications for CMS in § 63.9(g) apply only to COMS for battery stacks.
§ 63.10(a), (b)(1)–(b)(2)(xii), (b)(2)(xii) (b)(2)(xiv), (b)(3), (c)(1), (6), (c)(9)–(6), (c)(9), (15), (d), (e)(1)–(2), (e) (4), (f).	Recordkeeping and Reporting Requirements.	Yes	Additional records for CMS in § 63.10(c) (1)–(6), (9)–(15), and reports in § 63.10(d) (1)–(2) apply only to COMS for battery stacks.
§ 63.10(b)(2)(xi–(xii)	CMS Records for RATA Alternative	No	Subpart CCCCC doesn't require CEMS.
§ 63.10(c) (7)–(8)	Records Parameter Monitoring Exceedances for CMS.	No	Subpart CCCCC specifies record requirements.
§ 63.10(e)(3)	Excess Emission Reports	No	Subpart CCCCC specifies reporting requirements.
§ 63.11	Control Device Requirements	No	Subpart CCCCC does not require flares.
§ 63.12	State Authority and Delegations	Yes.	
§§ 63.13–63.15	Addresses, Incorporation by Reference, Availability of Information.	Yes.	

[FR Doc. 01–16192 Filed 7–2–01; 8:45 am]

BILLING CODE 6560–50–P

Federal Register

Tuesday,
July 3, 2001

Part III

The President

Proclamation 7453—Black Music Month, 2001

Notice of June 30, 2001—Continuation of Emergency With Respect to the Taliban

Federal Register
Vol. 66, No. 128
Tuesday, July 3, 2001

Presidential Documents

Title 3—

The President

Proclamation 7453 of June 29, 2001

Black Music Month, 2001

By the President of the United States of America

A Proclamation

America's rich musical heritage reflects the diversity of our people. Among many influences, the cultural traditions brought to this land from Africa more than four centuries ago and the remarkable musical achievements of African Americans since then have strongly and unmistakably improved the sound of American music.

From historical burdens such as slavery and injustice to the celebration of faith, much of the origin of African-American music reflects our national story. The work songs, shouts and hollers, spirituals, and ragtime of an earlier era laid the creative foundation for many of America's most distinctive and popular musical genres. These include rhythm and blues, jazz, hip hop, gospel, rap, and the roots of rock and roll.

Jazz, often called America's classical music, so influenced our culture that Americans named a decade after it. Like the country of its birth, jazz blends many traditions, such as African-American folk, rhythm and blues, French Creole classical form, and gospel. Through the creation and performance of music like jazz, black Americans were better able to exchange ideas freely across racial and cultural barriers. Before our Nation made significant strides in truly promoting equal justice and opportunity for all, black and white musicians in the genres of jazz, blues, and country played together in jam sessions, recording studios, and small bands. In many ways, their art preceded social change, allowing black and white musicians to meet as equals and to be judged on their musical ability, rather than the color of their skin. Their music also provided an outlet for African Americans to speak passionately and brilliantly to the rest of the Nation and the world.

From New Orleans and the back roads of the Mississippi Delta to Harlem and Chicago, black musicians set enduring and distinctive standards for American creativity. The blues of Ma Rainey and Bessie Smith, the gospel of Mahalia Jackson, the jazz of Duke Ellington, and the soul of Marvin Gaye claim fans of all ages from around the world. The trumpeting genius of Louis Armstrong and Dizzy Gillespie illustrate the exceptional musicianship so prominent in various genres of African-American music.

The career of Marian Anderson, the world-class contralto who was denied permission to sing in Constitution Hall because of her race, symbolizes the achievements of so many black American musicians. Performing instead at the Lincoln Memorial in 1939, she drew an audience of 75,000 and inspired the world not only with her rich musical gifts, but also with her determination and courage.

The music of Marian Anderson and other African-American artists has greatly enriched our quality of life and created one of our Nation's most treasured art forms. As universal and original expressions of the human experience, their body of work, both past and present, entertains, inspires, and thrills countless people around the world.

NOW, THEREFORE, I, GEORGE W. BUSH, President of the United States of America, by virtue of the authority vested in me by the Constitution

and the laws of the United States, do hereby proclaim June 2001, as Black Music Month. I encourage all Americans to learn more about the contributions of black artists to America's musical heritage and to celebrate their remarkable role in shaping our history and culture.

IN WITNESS WHEREOF, I have hereunto set my hand this twenty-ninth day of June, in the year of our Lord two thousand one, and of the Independence of the United States of America the two hundred and twenty-fifth.

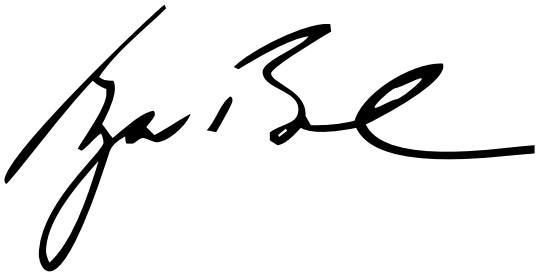

[FR Doc. 01–16911
Filed 07–02–01; 10:54 am]
Billing code 3195–01–P

Presidential Documents

Notice of June 30, 2001

Continuation of Emergency With Respect to the Taliban

On July 4, 1999, the President issued Executive Order 13129, ''Blocking Property and Prohibiting Transactions with the Taliban,'' to deal with the unusual and extraordinary threat to the national security and foreign policy of the United States posed by the actions and policies of the Taliban in Afghanistan. The order blocks all property and interests in property of the Taliban and prohibits trade-related transactions by United States persons involving the territory of Afghanistan controlled by the Taliban. The last notice of continuation was signed on June 30, 2000.

The Taliban continues to allow territory under its control in Afghanistan to be used as a safe haven and base of operations for Usama bin Laden and the al-Qaida organization who have committed and threaten to continue to commit acts of violence against the United States and its nationals. For these reasons, I have determined that it is necessary to maintain in force these emergency authorities beyond July 4, 2001. Therefore, in accordance with section 202(d) of the National Emergencies Act (50 U.S.C. 1622(d)), I am continuing the national emergency declared on July 4, 1999, with respect to the Taliban. This notice shall be published in the **Federal Register** and transmitted to the Congress.

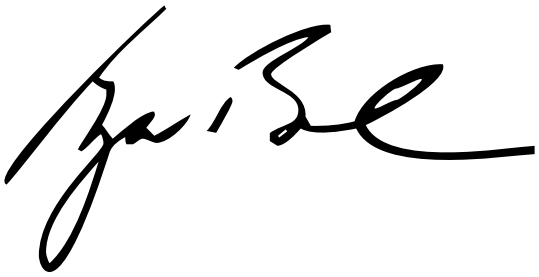

THE WHITE HOUSE,
June 30, 2001.

[FR Doc. 01–16912
Filed 7–2–01; 10:52 am]
Billing code 3195–01–P

Reader Aids

Federal Register

Vol. 66, No. 128

Tuesday, July 3, 2001

CUSTOMER SERVICE AND INFORMATION

Federal Register/Code of Federal Regulations

General Information, indexes and other finding aids	**202–523–5227**
Laws	**523–5227**
Presidential Documents	
Executive orders and proclamations	**523–5227**
The United States Government Manual	**523–5227**
Other Services	
Electronic and on-line services (voice)	**523–4534**
Privacy Act Compilation	**523–3187**
Public Laws Update Service (numbers, dates, etc.)	**523–6641**
TTY for the deaf-and-hard-of-hearing	**523–5229**

ELECTRONIC RESEARCH

World Wide Web

Full text of the daily Federal Register, CFR and other publications:

http://www.access.gpo.gov/nara

Federal Register information and research tools, including Public Inspection List, indexes, and links to GPO Access:

http://www.nara.gov/fedreg

E-mail

PENS (Public Law Electronic Notification Service) is an E-mail service for notification of recently enacted Public Laws. To subscribe, send E-mail to

listserv@listserv.gsa.gov

with the text message:

subscribe PUBLAWS-L your name

Use listserv@www.gsa.gov only to subscribe or unsubscribe to PENS. We cannot respond to specific inquiries.

Reference questions. Send questions and comments about the Federal Register system to:

info@fedreg.nara.gov

The Federal Register staff cannot interpret specific documents or regulations.

FEDERAL REGISTER PAGES AND DATE, JULY

34783–35076 2
35077–35364 3

CFR PARTS AFFECTED DURING JULY

At the end of each month, the Office of the Federal Register publishes separately a List of CFR Sections Affected (LSA), which lists parts and sections affected by documents published since the revision date of each title.

3 CFR

Proclamations:
7453 35361
Executive Orders:
13129 (See Notice of June 30, 2001 35363
Administrative Orders:
Notices:
Notice of June 30, 2001 35363

9 CFR

Proposed Rules:
301 35112
303 35112
317 35112
318 35112
319 35112
320 35112
325 35112
331 35112
381 35112
417 35112
430 35112

10 CFR

600 34783

12 CFR

1 34784
5 34792
7 34784
9 34792
23 34784
Proposed Rules:
7 34855

14 CFR

39 ..... 34798, 34800, 34802, 35077
71 ..... 34807, 35080
73 34808

15 CFR

303 34810

17 CFR

Proposed Rules:
41 34864
240 34864

19 CFR

24 34813

24 CFR

207 35070

26 CFR

Proposed Rules:
1 35112

29 CFR

2520 34994
Proposed Rules:
1904 35113

33 CFR

100 ..... 34819, 34821, 34823, 34825, 34826, 34828
117 34829
165 ..... 34829, 34831, 34832, 34834, 34836, 34838, 34839, 34841, 34842, 34844, 34846, 34848, 35080

36 CFR

51 35082

40 CFR

63 ..... 35083, 35087
81 34994
264 35087
300 34849
Proposed Rules:
52 ..... 34864, 34878
61 35115
63 ..... 35115, 35124, 35126, 35326
70 34901
264 ..... 35124, 35126
265 35126
266 35126
270 35126
300 34906

47 CFR

36 35107
73 35107
101 35107

49 CFR

Proposed Rules:
171 35155
571 35177
575 35179

50 CFR

Proposed Rules:
32 35193
216 35209
679 34852

REMINDERS

The items in this list were editorially compiled as an aid to Federal Register users. Inclusion or exclusion from this list has no legal significance.

RULES GOING INTO EFFECT JULY 3, 2001

FEDERAL COMMUNICATIONS COMMISSION

Radio stations; table of assignments:
- Maine; published 6-5-01
- Texas; published 6-5-01
- Texas and Louisiana; published 6-5-01

INTERIOR DEPARTMENT

National Park Service

Concession contract regulations; amendment; published 7-3-01

JUSTICE DEPARTMENT

National Instant Criminal Background Check System:
- Firearms transactions; information retention
  - Effective date delay; published 5-4-01

TRANSPORTATION DEPARTMENT

Coast Guard

Regattas and marine parades:
- Salute to Cecil County Veterans Fireworks Celebration; published 7-2-01

COMMENTS DUE NEXT WEEK

AGRICULTURE DEPARTMENT

Commodity Credit Corporation

Loan and purchase programs:
- Value-added wheat gluten and wheat starch product market development program; comments due by 7-9-01; published 6-8-01

COMMERCE DEPARTMENT

National Oceanic and Atmospheric Administration

Fishery conservation and management:
- Alaska; fisheries of Exclusive Economic Zone—
  - Steller sea lion protection measures; comments due by 7-9-01; published 6-13-01
- West Coast States and Western Pacific fisheries—
  - Pacific Coast Groundfish; comments due by 7-9-01; published 5-9-01
  - Pacific Coast groundfish; comments due by 7-9-01; published 6-8-01

COMMODITY FUTURES TRADING COMMISSION

Commodity Futures Modernization Act; implementation:
- Securities brokers or dealers; registration as futures commission merchant or introducing broker; comments due by 7-11-01; published 6-22-01

Securities:
- Market capitalization and dollar value of average daily trading volume, method of determining; narrow-based security index definition application; comments due by 7-11-01; published 7-2-01

CONSUMER PRODUCT SAFETY COMMISSION

Consumer Product Safety Act; implementation:
- Substantial product hazard reports; comments due by 7-9-01; published 6-7-01

ENERGY DEPARTMENT

Grants and agreements with for-profit organizations; inquiry; comments due by 7-9-01; published 5-8-01

ENVIRONMENTAL PROTECTION AGENCY

Air programs; State authority delegations:
- Delaware; comments due by 7-9-01; published 6-8-01

Air quality implementation plans; approval and promulgation; various States:
- Arizona and California; comments due by 7-9-01; published 6-8-01
- California; comments due by 7-12-01; published 6-12-01
- Indiana; comments due by 7-9-01; published 6-7-01
- Minnesota; comments due by 7-12-01; published 6-12-01
- Montana; comments due by 7-12-01; published 6-12-01
- Ohio; comments due by 7-12-01; published 6-12-01
- Rhode Island; comments due by 7-9-01; published 6-8-01
- Texas; comments due by 7-11-01; published 6-11-01

Clean Air Act:
- State and Federal Operating permits programs—
  - North Carolina; comments due by 7-12-01; published 6-12-01

Superfund program:
- National oil and hazardous substances contingency plan—
  - National priorities list update; comments due by 7-12-01; published 6-12-01

FEDERAL COMMUNICATIONS COMMISSION

Common carrier services:
- Commercial mobile radio services—
  - Wireless enhanced 911 compatibility; call back capability; comments due by 7-9-01; published 6-13-01

Radio broadcasting:
- AM broadcasters using directional antennas; performance verification; regulatory requirements reduction; comments due by 7-9-01; published 4-25-01

FEDERAL EMERGENCY MANAGEMENT AGENCY

Flood insurance program:
- Public entity insurers; pilot project; comments due by 7-9-01; published 5-8-01

HEALTH AND HUMAN SERVICES DEPARTMENT

Children and Families Administration

Personal Responsibility and Work Opportunity Reconciliation Act of 1996; implementation:
- Temporary Assistance for Needy Families Program—
  - High performance bonus awards to States; comments due by 7-9-01; published 5-10-01

HEALTH AND HUMAN SERVICES DEPARTMENT

Health Care Financing Administration

Medicare:
- Hospital inpatient payments and graduate medical education rates and costs; Benefits Improvement and Protection Act of 2000 provisions; comments due by 7-13-01; published 6-13-01
- Skilled nursing facilities; prospective payment system and consolidated billing; update; comments due by 7-9-01; published 5-10-01

HOUSING AND URBAN DEVELOPMENT DEPARTMENT

Low income housing:
- Housing assistance payments (section 8)—
  - Fair market rent schedules for rental certificate, loan management, property disposition, moderate rehabilitation, rental voucher program; comments due by 7-9-01; published 5-9-01

HOUSING AND URBAN DEVELOPMENT DEPARTMENT

Federal Housing Enterprise Oversight Office

Practice and procedure:
- Prompt supervisory response and corrective action; comments due by 7-9-01; published 4-10-01

INTERIOR DEPARTMENT

Surface Mining Reclamation and Enforcement Office

Permanent program and abandoned mine land reclamation plan submissions:
- Maryland; comments due by 7-12-01; published 6-12-01

POSTAL RATE COMMISSION

Practice and procedure:
- Electronic filing procedures; technical conference; comments due by 7-9-01; published 6-20-01

SECURITIES AND EXCHANGE COMMISSION

Securities:
- Market capitalization and dollar value of average daily trading volume, method of determining; narrow-based security index definition application; comments due by 7-11-01; published 7-2-01

SMALL BUSINESS ADMINISTRATION

Small business size standards:
- Small business investment companies, certified development companies, and agriculture industry; financial assistance and size eligibility requirements; comments due by 7-9-01; published 6-7-01
  - Correction; comments due by 7-9-01; published 6-14-01

Surety Bond Guarantee Program:
Miscellaneous amendments; comments due by 7-9-01; published 6-8-01

TRANSPORTATION DEPARTMENT

Coast Guard

Drawbridge operations:
California; comments due by 7-10-01; published 4-11-01
Massachusetts; comments due by 7-9-01; published 5-9-01

Gulf of Mexico; floating production, storage, and offloading units; meeting; comments due by 7-13-01; published 5-15-01

Outer Continental Shelf activities:
Minerals Management Service; fixed facilities inspections; comments due by 7-9-01; published 5-10-01

Ports and waterways safety:
Kalamazoon Lake, MI; safety zone; comments due by 7-11-01; published 6-26-01

TRANSPORTATION DEPARTMENT

Federal Aviation Administration

Airworthiness directives:
Air Tractor, Inc.; comments due by 7-13-01; published 5-16-01
Airbus; comments due by 7-11-01; published 6-11-01
Boeing; comments due by 7-9-01; published 5-9-01
CFM International; comments due by 7-9-01; published 5-9-01
Eurocopter France; comments due by 7-9-01; published 5-9-01
Foker; comments due by 7-11-01; published 6-11-01
McDonnell Douglas; comments due by 7-9-01; published 6-14-01

Airworthiness standards:
Special conditions—
Diamond Aircraft Industries GmbH; Model DA 40 airplane; comments due by 7-9-01; published 6-7-01

Class E airspace; comments due by 7-11-01; published 6-11-01

TRANSPORTATION DEPARTMENT

Federal Highway Administration

Right-of-way and environment:
Real estate program administration; comments due by 7-9-01; published 5-9-01

TRANSPORTATION DEPARTMENT

National Highway Traffic Safety Administration

Motor vehicle safety standards:
Booster seat education plan development; comments due by 7-13-01; published 6-6-01

TREASURY DEPARTMENT

Fiscal Service

Financial Management Service:
Automated Clearing House; Federal agencies participation; comments due by 7-11-01; published 4-12-01

VETERANS AFFAIRS DEPARTMENT

Medical benefits:
Veterans' medical care or services; reasonable charges; comments due by 7-9-01; published 5-8-01

LIST OF PUBLIC LAWS

This is a continuing list of public bills from the current session of Congress which have become Federal laws. It may be used in conjunction with ''P L U S'' (Public Laws Update Service) on 202–523–6641. This list is also available online at http://www.nara.gov/fedreg.

The text of laws is not published in the **Federal Register** but may be ordered in ''slip law'' (individual pamphlet) form from the Superintendent of Documents, U.S. Government Printing Office, Washington, DC 20402 (phone, 202–512–1808). The text will also be made available on the Internet from GPO Access at http://www.access.gpo.gov/nara/index.html. Some laws may not yet be available.

H.R. 1914/P.L. 107–17

To extend for 4 additional months the period for which chapter 12 of title 11 of the United States Code is reenacted. (June 26, 2001; 115 Stat. 151)

Last List June 11, 2001

Public Laws Electronic Notification Service (PENS)

PENS is a free electronic mail notification service of newly enacted public laws. To subscribe, go to http://hydra.gsa.gov/archives/publaws-l.html or send E-mail to **listserv@listserv.gsa.gov** with the following text message:

SUBSCRIBE PUBLAWS-L Your Name.

Note: This service is strictly for E-mail notification of new laws. The text of laws is not available through this service. **PENS** cannot respond to specific inquiries sent to this address.