AUTHENTICATED U.S. GOVERNMENT INFORMATION GPO

Federal Register

9–26–01 Wednesday
Vol. 66 No. 187 Sept. 26, 2001
Pages 49085–49270

The **FEDERAL REGISTER** is published daily, Monday through Friday, except official holidays, by the Office of the Federal Register, National Archives and Records Administration, Washington, DC 20408, under the Federal Register Act (44 U.S.C. Ch. 15) and the regulations of the Administrative Committee of the Federal Register (1 CFR Ch. I). The Superintendent of Documents, U.S. Government Printing Office, Washington, DC 20402 is the exclusive distributor of the official edition.

The **Federal Register** provides a uniform system for making available to the public regulations and legal notices issued by Federal agencies. These include Presidential proclamations and Executive Orders, Federal agency documents having general applicability and legal effect, documents required to be published by act of Congress, and other Federal agency documents of public interest.

Documents are on file for public inspection in the Office of the Federal Register the day before they are published, unless the issuing agency requests earlier filing. For a list of documents currently on file for public inspection, see http://www.nara.gov/fedreg.

The seal of the National Archives and Records Administration authenticates the Federal Register as the official serial publication established under the Federal Register Act. Under 44 U.S.C. 1507, the contents of the **Federal Register** shall be judicially noticed.

The **Federal Register** is published in paper and on 24x microfiche. It is also available online at no charge as one of the databases on GPO Access, a service of the U.S. Government Printing Office.

The online edition of the **Federal Register** is issued under the authority of the Administrative Committee of the Federal Register as the official legal equivalent of the paper and microfiche editions (44 U.S.C. 4101 and 1 CFR 5.10). It is updated by 6 a.m. each day the **Federal Register** is published and it includes both text and graphics from Volume 59, Number 1 (January 2, 1994) forward.

GPO Access users can choose to retrieve online **Federal Register** documents as TEXT (ASCII text, graphics omitted), PDF (Adobe Portable Document Format, including full text and all graphics), or SUMMARY (abbreviated text) files. Users should carefully check retrieved material to ensure that documents were properly downloaded.

On the World Wide Web, connect to the **Federal Register** at http://www.access.gpo.gov/nara. Those without World Wide Web access can also connect with a local WAIS client, by Telnet to swais.access.gpo.gov, or by dialing (202) 512-1661 with a computer and modem. When using Telnet or modem, type swais, then log in as guest with no password.

For more information about GPO Access, contact the GPO Access User Support Team by E-mail at gpoaccess@gpo.gov; by fax at (202) 512–1262; or call (202) 512–1530 or 1–888–293–6498 (toll free) between 7 a.m. and 5 p.m. Eastern time, Monday–Friday, except Federal holidays.

The annual subscription price for the **Federal Register** paper edition is $638, or $697 for a combined **Federal Register,** Federal Register Index and List of CFR Sections Affected (LSA) subscription; the microfiche edition of the **Federal Register** including the Federal Register Index and LSA is $253. Six month subscriptions are available for one-half the annual rate. The charge for individual copies in paper form is $9.00 for each issue, or $9.00 for each group of pages as actually bound; or $2.00 for each issue in microfiche form. All prices include regular domestic postage and handling. International customers please add 25% for foreign handling. Remit check or money order, made payable to the Superintendent of Documents, or charge to your GPO Deposit Account, VISA, MasterCard or Discover. Mail to: New Orders, Superintendent of Documents, P.O. Box 371954, Pittsburgh, PA 15250–7954.

There are no restrictions on the republication of material appearing in the **Federal Register.**

How To Cite This Publication: Use the volume number and the page number. Example: 66 FR 12345.

SUBSCRIPTIONS AND COPIES

PUBLIC	
Subscriptions:	
Paper or fiche	**202–512–1800**
Assistance with public subscriptions	**512–1806**
General online information	**202–512–1530; 1–888–293–6498**
Single copies/back copies:	
Paper or fiche	**512–1800**
Assistance with public single copies	**512–1803**
FEDERAL AGENCIES	
Subscriptions:	
Paper or fiche	**523–5243**
Assistance with Federal agency subscriptions	**523–5243**

Printed on recycled paper.

Contents

Federal Register

Vol. 66, No. 187

Wednesday, September 26, 2001

Agricultural Marketing Service
RULES
Oranges, grapefruit, tangerines, and tangelos grown in Florida, 49088–49093

Agriculture Department
See Agricultural Marketing Service
See Animal and Plant Health Inspection Service

Animal and Plant Health Inspection Service
NOTICES
Agency information collection activities:
Proposed collection; comment request, 49160–49161

Antitrust Division
NOTICES
Competitive impact statements and proposed consent judgments:
3D Systems Corp et al., 49200–49211

Centers for Disease Control and Prevention
NOTICES
Agency information collection activities:
Proposed collection; comment request, 49190–49192
Submission for OMB review; comment request, 49192–49193

Coast Guard
RULES
Ports and waterways safety:
Coast Guard Force Protection Station Portsmouth Harbor, NH, et al.; safety and security zones, 49106–49107
Ports of Jacksonville and Port Canaveral, FL; security zones, 49104–49106
NOTICES
Agency information collection activities:
Submission for OMB review; comment request, 49247–49248

Commerce Department
See Foreign-Trade Zones Board
See International Trade Administration
See National Oceanic and Atmospheric Administration

Committee for the Implementation of Textile Agreements
NOTICES
Cotton, wool, and man-made textiles:
Turkey, 49168–49169
Textile and apparel categories:
Quota and visa requirements; exemptions—
Apparel articles assembled from regional and other fabric for beneficiary Sub-Saharan African countries, 49169

Comptroller of the Currency
RULES
Corporate activities:
Federal branches and agencies; operating subsidiaries, 49093–49098

Defense Nuclear Facilities Safety Board
NOTICES
Senior Executive Service:
Performance Review Board; membership, 49169–49170

Education Department
NOTICES
Agency information collection activities:
Proposed collection; comment request, 49170

Energy Department
See Federal Energy Regulatory Commission

Environmental Protection Agency
RULES
Air quality implementation plans; approval and promulgation; various States:
Maryland, 49108–49110
Pennsylvania, 49107–49108
Hazardous waste program authorizations:
California, 49118–49124
Pesticides; tolerances in food, animal feeds, and raw agricultural commodities:
Zoxamide and its metabolites, 49110–49118
NOTICES
Agency information collection activities:
Proposed collection; comment request, 49176–49177
Air quality; prevention of significant deterioration (PSD):
Permit determinations, etc.—
Chehalis Generating Facility, WA, 49178
Meetings:
Clean Air Act Advisory Committee, 49178–49179
State and Tribal Toxics Action Forum, 49179–49180
Pesticide programs:
Risk assessments; availability, etc.—
Atrazine, 49180–49182
Pesticide registration, cancellation, etc.:
Cheminova AGRO A/S et al., 49182–49183
Syngenta Crop Protection, Inc., et al., 49184–49186
Water quality criteria:
Atrazine; aquatic life criteria document, 49186–49188

Executive Office of the President
See Management and Budget Office
See Trade Representative, Office of United States

Farm Credit Administration
NOTICES
Meetings; Sunshine Act, 49188

Federal Aviation Administration
RULES
Airworthiness directives:
Rolls-Royce plc, 49099–49101
IFR altitudes, 49101–49104
PROPOSED RULES
Airworthiness directives:
EXTRA Flugzeugbau GmbH, 49148–49152
NOTICES
Aeronautical land-use assurance; waivers:
Stafford Regional Airport, VA, 49248–49249
Exemption petitions; summary and disposition, 49249–49250

Meetings:
Aviation Weather Technology Transfer Board, 49250
Passenger facility charges; applications, etc.:
Fort Dodge Regional Airport, IA, 49250–49251
Reports and guidance documents; availability, etc.:
Small Airplane Directorate Policy—
Flammability testing; policy statement, 49251–49252
Static strength substantiation of composite airplane structure; policy statement, 49251

Federal Communications Commission
RULES
Television broadcasting:
Satellite Home Viewer Improvement Act implementation; broadcast signal carriage and retransmission consent issues, 49124–49135
NOTICES
Common carrier services:
In-region interLATA services—
Verizon Pennsylvania Inc. et al.; application to provide services in Pennsylvania, 49188–49189

Federal Energy Regulatory Commission
NOTICES
Agency information collection activities:
Reporting and recordkeeping requirements, 49170–49171
Electric rate and corporate regulation filings:
Panda Tallmadge Power, L.P., et al., 49174–49176
Environmental statements; availability, etc.:
Pacific Gas & Electric Co., 49176
S.D. Warren Co., 49176
Applications, hearings, determinations, etc.:
Canyon Creek Compression Co., 49171–49172
Columbia Gulf Transmission Co., 49172
Credit Suisse First Boston International, 49172
Gulf South Pipeline Co., L.P., 49173
KO Transmission Co., 49173
Paiute Pipeline Co., 49173
Questar Pipeline Co., 49174
Transcontinental Gas Pipe Line Corp., 49174

Federal Highway Administration
PROPOSED RULES
Engineering and traffic operations:
Highway bridge replacement and rehabilitation program, 49152–49154
National bridge inspection standards, 49154–49158
NOTICES
Environmental statements; notice of intent:
Honolulu City and County, HI; Primary Transportation Corridor, 49252–49253

Federal Maritime Commission
NOTICES
Agreements filed, etc., 49190
Ocean transportation intermediary licenses:
Worldwide Express, 49190

Federal Reserve System
RULES
Extensions of credit by Federal Reserve banks (Regulation A):
Discount rate changes, 49098–49099

Federal Retirement Thrift Investment Board
NOTICES
Meetings; Sunshine Act, 49190

Federal Transit Administration
NOTICES
Environmental statements; notice of intent:
Honolulu City and County, HI; Primary Transportation Corridor, 49252–49253

Fish and Wildlife Service
PROPOSED RULES
Endangered and threatened species:
Critical habitat designations—
Sacramento Mountains checkerspot butterfly, 49158–49159
NOTICES
Endangered and threatened species permit applications, 49197–49198
Meetings:
Aquatic Nuisance Species Task Force, 49198

Food and Drug Administration
NOTICES
Human drugs:
Drug products withdrawn from sale for reasons other than safety or effectiveness—
Disulfiram tablets, 250 and 500 milligrams, 49193–49194

Foreign-Trade Zones Board
NOTICES
Applications, hearings, determinations, etc.:
Indiana
Rolls Royce Corp.; gas turbine engine manufacturing facilities, 49161–49162
Puerto Rico
IPR Pharmaceuticals, Inc.; pharmaceuticals manufacturing facility, 49162–49163
Texas
Valero Refining Co.-Texas; oil refinery complex, 49163

Health and Human Services Department
See Centers for Disease Control and Prevention
See Food and Drug Administration
See National Institutes of Health
See Public Health Service
See Substance Abuse and Mental Health Services Administration
RULES
Medical facility construction and modernization:
Uncompensated services; compliance alternatives, 49261–49269

Housing and Urban Development Department
NOTICES
Agency information collection activities:
Proposed collection; comment request, 49196–49197

Indian Affairs Bureau
NOTICES
Agency information collection activities:
Submission for OMB review; comment request, 49198–49199

Interior Department
See Fish and Wildlife Service
See Indian Affairs Bureau

International Trade Administration
NOTICES
Antidumping:
Heavy forged hand tools from—
China, 49163–49164
Spherical plain bearings and parts, etc., from—
France and Singapore, 49164
Top-of-the-stove stainless steel cooking ware from—
Korea, 49164–49165
Applications, hearings, determinations, etc.:
Research Foundation of State University of New York, 49165

Justice Department
See Antitrust Division
NOTICES
Pollution control; consent judgments:
Norrell Dearing et al., 49199
RSO, Inc., 49199–49200

Labor Department
See Occupational Safety and Health Administration

Management and Budget Office
NOTICES
Federal Activities Inventory Reform Act of 1998; implementation:
Agency Inventories of Activities that are not Inherently Governmental; availability, 49219–49221

Merit Systems Protection Board
NOTICES
Variations from normal case processing procedures; effects of attacks on World Trade Center and Pentagon, 49213–49214

National Archives and Records Administration
NOTICES
Reports and guidance documents; availability, etc.:
Services for persons with limited English proficiency; comment request, 49214–49215

National Highway Traffic Safety Administration
NOTICES
Agency information collection activities:
Proposed collection; comment request, 49253–49254
Meetings:
New Car Assessment Program; Consumer Braking Initiative; workshop cancelled, 49254
Motor vehicle safety standards; exemption petitions, etc.:
Continental General Tire, Inc., 49254–49255
Safeline Corp., 49256–49258

National Institutes of Health
NOTICES
Agency information collection activities:
Submission for OMB review; comment request, 49194
Meetings:
Fogarty International Center Advisory Board, 49194
National Heart, Lung, and Blood Institute, 49195
National Institute of Diabetes and Digestive and Kidney Diseases, 49195–49196
National Institute on Alcohol Abuse and Alcoholism, 49196

National Oceanic and Atmospheric Administration
RULES
Fishery conservation and management:
Alaska; fisheries of Exclusive Economic Zone—
Pollock, 49146–49147
Gulf of Mexico and South Atlantic spiny lobster—
Figure 1 added; CFR correction, 49135–49136
Northeastern United States fisheries—
Tilefish, 49136–49146
NOTICES
Marine mammals:
Incidental taking; authorization letters, etc.—
California Transportation Department, Richmond-San Rafael Bridge, San Francisco Bay, CA; seismic retrofit construction; Pacific harbor seals, etc., 49165–49167
Meetings:
Gulf of Mexico Fishery Management Council, 49167–49168
New England Fishery Management Council, 49168

Nuclear Regulatory Commission
NOTICES
Environmental statements; availability, etc.:
Exelon Generation Co., LLC, 49218–49219
General Electric Co., 49219
Applications, hearings, determinations, etc.:
Hood, Virgil J., Sr., 49215–49217
Niagara Mohawk Power Corp. et al., 49217–49218

Occupational Safety and Health Administration
NOTICES
Nationally recognized testing laboratories, etc.:
MET Laboratories, Inc., 49211–49213

Office of Management and Budget
See Management and Budget Office

Office of United States Trade Representative
See Trade Representative, Office of United States

Personnel Management Office
RULES
Health benefits, Federal employees:
Health insurance premiums—
Pretax allotments, 49085–49086
TRICARE-eligible's enrollment suspension, 49086–49088
NOTICES
Agency information collection activities:
Submission for OMB review; comment request, 49221
Excepted service:
Schedules A, B, and C; positions placed or revoked—
Consolidated list, 49221–49238
Health benefits, Federal employees:
Medically underserved areas (2002 CY), 49240

Public Health Service
See Centers for Disease Control and Prevention
See Food and Drug Administration
See National Institutes of Health
See Substance Abuse and Mental Health Services Administration
NOTICES
Meetings:
National Toxicology Program—
Alternative Toxicological Methods Advisory Committee, 49196

Research and Special Programs Administration
NOTICES
Meetings:
Better Understanding of Mechanical Damage in Pipelines; cooperative agreement quarterly performance review, 49258–49259

Securities and Exchange Commission
NOTICES
Meetings; Sunshine Act, 49240
Self-regulatory organizations; proposed rule changes:
Philadelphia Stock Exchange, Inc., 49240–49244

Small Business Administration
NOTICES
Agency information collection activities:
Proposed collection; comment request, 49244

Social Security Administration
NOTICES
Agency information collection activities:
Proposed collection and submission for OMB review; comment request, 49244–49246

Substance Abuse and Mental Health Services Administration
NOTICES
Meetings:
Substance Abuse Treatment Center National Advisory Council, 49196

Textile Agreements Implementation Committee
See Committee for the Implementation of Textile Agreements

Trade Representative, Office of United States
NOTICES
Tarrif-rate quota amount determinations:
Raw cane sugar, refined sugar, and sugar-containing products, 49246–49247

Transportation Department
See Coast Guard
See Federal Aviation Administration
See Federal Highway Administration
See Federal Transit Administration
See National Highway Traffic Safety Administration
See Research and Special Programs Administration
NOTICES
Meetings:
North American Free Trade Agreement information conference, 49247

Treasury Department
See Comptroller of the Currency

Veterans Affairs Department
NOTICES
Agency information collection activities:
Proposed collection; comment request, 49259

Separate Parts In This Issue

Part II
Department of Health and Human Services, 49261–49269

Reader Aids
Consult the Reader Aids section at the end of this issue for phone numbers, online resources, finding aids, reminders, and notice of recently enacted public laws.

CFR PARTS AFFECTED IN THIS ISSUE

A cumulative list of the parts affected this month can be found in the Reader Aids section at the end of this issue.

5 CFR
550.....49085
890.....49086

7 CFR
905.....49088

12 CFR
5.....49093
28.....49093
201.....49098

14 CFR
39.....49099
95.....49101

Proposed Rules:
39.....49148

23 CFR

Proposed Rules:
650 (2 documents) 49152, 49154

33 CFR
165 (2 documents) 49104, 49106

40 CFR
52 (4 documents) 49107, 49108
180.....49110
271.....49118

42 CFR
124.....49262

47 CFR
76.....49124

50 CFR
640.....49135
648.....49136
679.....49146

Proposed Rules:
17.....49158

Rules and Regulations

Federal Register
Vol. 66, No. 187
Wednesday, September 26, 2001

This section of the FEDERAL REGISTER contains regulatory documents having general applicability and legal effect, most of which are keyed to and codified in the Code of Federal Regulations, which is published under 50 titles pursuant to 44 U.S.C. 1510.

The Code of Federal Regulations is sold by the Superintendent of Documents. Prices of new books are listed in the first FEDERAL REGISTER issue of each week.

OFFICE OF PERSONNEL MANAGEMENT

5 CFR Part 550

RIN 3206–AJ16

Pretax Allotments for Health Insurance Premiums

AGENCY: Office of Personnel Management.

ACTION: Final rule.

SUMMARY: The Office of Personnel Management (OPM) is issuing final regulations dealing with the use of OPM's allotment authority to allow for Federal Employees Health Benefits (FEHB) employee premium payments to be deducted on a pretax basis under section 125 of the Internal Revenue Code. The allotment regulations work in tandem with related FEHB regulations dealing with this premium conversion.

EFFECTIVE DATE: October 26, 2001.

FOR FURTHER INFORMATION CONTACT: Bryce Baker, (202) 606–2858, FAX: (202) 606–0824, or e-mail: *payleave@opm.gov.*

SUPPLEMENTARY INFORMATION: On July 19, 2000, the Office of Personnel Management (OPM) published interim regulations (65 FR 44643) that allowed employees to pay their Federal Employees Health Benefits (FEHB) premiums through an allotment from the employee's pay to the employing agency. Use of this allotment mechanism allows FEHB premiums to be paid with pretax dollars, as permitted under section 125 of the Internal Revenue Code. The amendments to the allotment regulations were accompanied by a separate interim rule making necessary changes in the FEHB regulations (65 FR 44644) to allow this premium conversion.

OPM received comments from one agency representative and two individual employees on the changes in the allotment regulations.

The agency comment noted that a part of the allotment regulations not amended in the interim rule contained a reference to an obsolete Treasury regulation. It recommended that this be corrected in the final regulations.

Section 550.311(a)(5) of title 5, Code of Federal Regulations, specifies that agencies must allow employees to have ''up to two allotments for savings under Department of the Treasury regulations as codified at part 209 of title 31, Code of Federal Regulations.'' However, the Treasury Department removed part 209 from its title 31 regulations effective on January 27, 1997. (*See* 61 FR 68155, December 27, 1996.) Part 209 dealt with certain wage, salary, annuity, and allotment payments for credit to the accounts of Federal employees and beneficiaries generally made by paper check. These payments are now made by electronic funds transfer and are regulated by part 210. Part 210 does not impose a limit on the number of allotments for savings. Instead, it leaves the matter to the paying agency.

We are revising § 550.311(a)(5) to remove the obsolete reference to part 209 of title 31. The revised language provides that an agency must allow an employee to have ''at least two allotments for savings.'' Thus, the OPM regulations continue to require that agencies allow employees to have a minimum of two savings allotments, but there are no restrictions on the maximum number of savings allotment that may be permitted under an agency's discretionary authority in § 550.311(b).

An individual commenter questioned why only health insurance premium payments under the FEHB Program could be deducted on a pretax basis. The commenter is a civilian employee who is covered by certain health insurance programs established for retired military members. At the President's direction, the allotment regulations were amended to provide specifically that FEHB premiums may be deducted on a pretax basis. Section 550.311(b) provides that pretax allotments are permitted only when there is an authority (*i.e.,* statute, Executive order, Presidential directive, or OPM regulations) specific to Federal employees. For example, certain transportation fringe benefit allotments may be made on a pretax basis as allowed by 5 U.S.C. 7905(b) and Executive Order 13150, April 21, 2000.

Another commenter expressed concern about whether Federal employees would be provided with information on the impact that pretax FEHB premium allotments would have on Social Security benefits, so that they could make an informed decision on whether to waive participation in premium conversion. In fact, prior to implementation of premium conversion, OPM provided agencies with extensive information about the premium conversion program to share with employees. That information included a sample employee handout with a section highlighting the Social Security benefit issue and a financial worksheet with a section on estimating the impact on a person's Social Security benefits. (*See* Benefits Administration Letter 00–215 issued by OPM's Retirement and Insurance Service on August 24, 2000.) This information also was made available on OPM's website.

These final regulations adopt the interim regulations without any changes to the amendments contained in the interim regulations. However, as described above, we are making a correction dealing with the obsolete reference to a withdrawn Treasury regulation.

E.O. 12866, Regulatory Review

This rule has been reviewed by the Office of Management and Budget in accordance with Executive Order 12866.

Regulatory Flexibility Act

I certify that these regulations will not have a significant economic impact on a substantial number of small entities because they will apply only to Federal agencies and employees.

List of Subjects in 5 CFR Part 550

Administrative practice and procedure, Claims, Education, Government employees, Wages.

U.S. Office of Personnel Management.

Kay Coles James,

Director.

Accordingly, the interim rule amending part 550 of title 5 of the Code of Federal Regulations, which was published at 65 FR 44643, is adopted as a final rule with the following change:

PART 550—PAY ADMINISTRATION (GENERAL)

Subpart C—Allotments and Assignments from Federal Employees

1. The authority citation for subpart C of part 550 continues to read as follows:

Authority: 5 U.S.C. 5527; E.O. 10982, 3 CFR 1959–1963 Comp., p. 502.

2. In § 550.311, paragraph (a)(5) is revised to read as follows:

§ 550.311 Authority of agency.

(a) * * *

(5) At least two allotments for savings;

* * * * *

[FR Doc. 01–24103 Filed 9–25–01; 8:45 am]

BILLING CODE 6325–39–P

OFFICE OF PERSONNEL MANAGEMENT

5 CFR Part 890

RIN: 3206–AJ36

Suspension of TRICARE-Eligible's Enrollment in the Federal Employees Health Benefits (FEHB) Program

AGENCY: Office of Personnel Management.

ACTION: Interim Rule.

SUMMARY: The Office of Personnel Management is issuing an interim rule to allow TRICARE-eligible FEHB Program annuitants and former spouses to suspend their FEHB enrollments, and then return to the FEHB Program during the Open Season, or return to FEHB coverage immediately, if they involuntarily lose TRICARE coverage. The intent of this rule is to allow TRICARE-eligible beneficiaries to avoid the expense of continuing to pay FEHB Program premiums while they are using TRICARE coverage, without endangering their ability to return to the FEHB Program in the future.

DATES: Effective September 26, 2001. Comments received on or before November 26, 2001.

FOR FURTHER INFORMATION CONTACT: Michael W. Kaszynski, Policy Analyst, Insurance Policy and Information Division, OPM, Room 3425, 1900 E Street, NW., Washington, DC 20415–0001. He can also be reached at (202) 606–0004 or by electronic mail (e-mail) at: *mwkaszyn@opm.gov.*

SUPPLEMENTARY INFORMATION: Effective October 1, 2001, the National Defense Authorization Act for 2001 will reinstate TRICARE coverage for Medicare-eligible uniformed services retirees, their survivors and eligible dependents. TRICARE coverage will be advantageous to many Medicare-eligible military system beneficiaries who now are covered under the FEHB Program as Federal civilian retirees, family members, or former spouses.

Under current FEHB regulations, however, an annuitant or former spouse who cancels his or her FEHB coverage to use TRICARE coverage would not be allowed to return to FEHB coverage. Therefore, OPM is issuing these interim regulations, with a request for comments, to allow these FEHB participants to suspend, rather than cancel, their FEHB coverage when they begin TRICARE coverage. Under this rule, they would be allowed to return to FEHB coverage immediately if they involuntarily lose TRICARE coverage or, if not, during the next annual FEHB Open Season.

We are also amending our regulations to clarify a similar situation involving FEHB-covered annuitants and former spouses. The regulations allow an individual who drops FEHB coverage when he or she enrolls in a Medicare-sponsored plan, or in Medicaid or a similar State-sponsored program of medical assistance for the needy, to return to FEHB coverage during the annual Open Season or immediately upon being involuntarily disenrolled from the non-FEHB coverage.

Waiver of Notice of Proposed Rule Making

Pursuant to section 553(b)(3)(B) of title 5 of the United States Code, I find that good cause exists for waiving the general notice of proposed rule making. The notice is being waived so that FEHB enrollees who are eligible for the new TRICARE benefits can suspend their FEHB coverage and use their new benefits at their first opportunity.

Regulatory Flexibility Act

I certify that this regulation will not have a significant economic impact on a substantial number of small entities because the regulation will only affect health insurance carriers under the Federal Employees Health Benefits Program.

Executive Order 12866, Regulatory Review

This regulation has been reviewed by the Office of Management and Budget in accordance with Executive Order 12866.

List of Subjects in 5 CFR Part 890

Administrative practice and procedure, Government employees, Health facilities, Health insurance, Health professionals, Hostages, Iraq, Kuwait, Lebanon, Reporting and record keeping requirements, Retirement.

U.S. Office of Personnel Management.

Kay Coles James,

Director.

For the reasons set forth in the preamble, OPM is amending 5 CFR Part 890 as follows:

PART 890—FEDERAL EMPLOYEES HEALTH BENEFITS PROGRAM

1. The authority citation for Part 890 continues to read as follows:

Authority: 5 U.S.C. 8913; § 890.803 also issued under 50 U.S.C. 403p, 22 U.S.C. 4069c and 4069c–1; subpart L also issued under sec. 599C of Pub. L. 101–513, 104 Stat. 2064, as amended; § 890.102 also issued under sections 11202(f), 11232(e), 11246(b) and (c) of Pub. L. 105–33, 111 Stat. 251; and section 721 of Pub. L. 105–261, 112 Stat. 2061.

PART 890—FEDERAL EMPLOYEES HEALTH BENEFITS PROGRAM

2. In § 890.304, paragraph (d)(2) is revised to read as follows:

§ 890.304 Termination of enrollment.

* * * * *

(d) * * *

(2) An annuitant may suspend enrollment in FEHB for the purpose of enrolling in a Medicare-sponsored plan under sections 1833, 1876, or 1851 of the Social Security Act, or to enroll in the Medicaid program or a similar State-sponsored program of medical assistance for the needy, or for the purpose of using TRICARE coverage (including coverage provided by the Uniformed Services Family Health Plan) under title 10 U.S.C. instead of FEHB coverage. To suspend FEHB coverage, documentation must be submitted to the employing office or retirement system within the period beginning 31 days before and ending 31 days after the effective date of the enrollment in the Medicare-sponsored plan, or the Medicaid or similar program, or the first day of using TRICARE (including the Uniformed Services Family Health Plan) instead of FEHB coverage. The suspension becomes effective on the day before the effective date of the enrollment in the Medicare-sponsored plan, or Medicaid or a similar program, or the day before the day designated by the annuitant as the first day of using TRICARE (including the Uniformed Services Family Health Plan) instead of FEHB coverage.

* * * * *

3. In § 890.306 paragraphs (f)(1)(ii) and (f)(1)(iii) are revised, paragraph (f)(1)(iv) is added and paragraphs (h) and (i) are revised to read as follows:

890.306 Opportunities for annuitants to change enrollment or to reenroll; effective dates.

* * * * *

(f) * * *

(1) * * *

(ii) An annuitant who suspended enrollment under this part for the purpose of enrolling in a Medicare-sponsored plan under sections 1833, 1876, or 1851 of the Social Security Act, may reenroll.

(iii)An annuitant who suspended the enrollment under this part because he or she furnished proof of eligibility for coverage under the Medicaid program or similar State-sponsored program of medical assistance for the needy, may reenroll.

(iv) An annuitant who suspended enrollment under this part for the purpose of using TRICARE (including the Uniformed Services Family Health Plan) coverage instead of FEHB coverage, may reenroll.

* * * * *

(h) *Reenrollment of annuitants who suspended enrollment to enroll in a Medicare-sponsored plan or to use TRICARE (including the Uniformed Services Family Health Plan) coverage under title 10 U.S.C. instead of FEHB coverage.*

(1) An annuitant who had been enrolled (or was otherwise eligible to enroll) for coverage under this part and suspended the enrollment for the purpose of enrolling in a Medicare sponsored plan under sections 1833, 1876, or 1851 of the Social Security Act, or to use the TRICARE program (including the Uniformed Services Family Health Plan) under title 10 U.S.C. instead of the FEHB Program (as provided by § 890.304(d)), and who is subsequently involuntarily disenrolled from the Medicare sponsored plan or the TRICARE program (including the Uniformed Services Family Health Plan), may immediately reenroll in any available plan under this part at any time beginning 31 days before and ending 60 days after the disenrollment. A reenrollment under this paragraph (h) of this section takes effect on the date following the effective date of the disenrollment as shown on the documentation from the Medicare sponsored plan or the TRICARE program (including the Uniformed Services Family Health Plan).

(2) An annuitant who voluntarily suspended enrollment in the FEHB Program to enroll in a Medicare sponsored plan or to use TRICARE (including the Uniformed Services Family Health Plan), but now wants to reenroll in the FEHB Program for any reason other than an involuntary loss of coverage, may do so during the next available Open Season (as provided by paragraph (f) of this section).

(i) *Reenrollment of annuitants who suspended enrollment because of eligibility under Medicaid or a similar State-sponsored program of medical assistance for the needy.*

(1) An annuitant who had been enrolled (or was otherwise eligible to enroll) for coverage under this part and suspended the enrollment because he or she furnished proof of eligibility for coverage under the Medicaid program or a similar State-sponsored program of medical assistance for the needy (as provided by § 890.304(d)), and who involuntarily loses that coverage, may reenroll in any available plan under this part at any time beginning 31 days before and ending 60 days after the loss of Medicaid or similar State-sponsored coverage. A reenrollment under this paragraph (i)(1) takes effect on the date following the date of loss of Medicaid or similar State-sponsored coverage.

(2) An annuitant who suspended his or her enrollment because he or she furnished proof of eligibility for coverage under the Medicaid program or a similar State-sponsored program of medical assistance for the needy, and who wishes to reenroll in a plan under this part for any reason, may do so during the next available Open Season as provided by paragraph (f) of this section.

4. In § 890.806 paragraphs (f)(1)(ii) and (f)(1)(iii) are revised and (f)(1)(iv) is added and paragraphs (h) and (i) are revised to read as follows:

§ 890.806 Opportunities for former spouses to enroll and change enrollment; effective dates of enrollment.

* * * * *

(f) * * *

(1) * * *

(ii) A former spouse who suspended the enrollment under this part for the purpose of enrolling in a Medicare sponsored plan under sections 1833, 1876, or 1851 of the Social Security Act, may reenroll.

(iii) A former spouse who suspended the enrollment under this part because he or she furnished proof of eligibility for coverage under the Medicaid program or a similar State-sponsored program of medical assistance for the needy, may reenroll.

(iv) A former spouse who suspended enrollment under this part for the purpose of using TRICARE coverage (including the Uniformed Services Family Health Plan) instead of FEHB coverage, may reenroll.

* * * * *

(h) *Reenrollment of former spouses who suspended enrollment to enroll in a Medicare sponsored plan or to use TRICARE coverage (including the Uniformed Services Family Health Plan) under title 10 U.S.C. instead of FEHB coverage.*

(1) A former spouse who had been enrolled for coverage under this part and suspended enrollment for the purpose of enrolling in a Medicare sponsored plan under sections 1833, 1876, or 1851 of the Social Security Act, or to use the TRICARE program (including the Uniformed Services Family Health Plan) under title 10 U.S.C. instead of FEHB (as provided in § 890.807(e)), or who meets the eligibility requirements of § 890.803 and the application time limitation requirements of § 890.805, but postponed enrollment for this purpose, and who is subsequently involuntarily disenrolled from the Medicare sponsored plan or the TRICARE program (including the Uniformed Services Family Health Plan), may immediately reenroll in any available plan under this part at any time beginning 31 days before and ending 60 days after the disenrollment. A reenrollment under this paragraph (h) of this section takes effect on the date following the effective date of the disenrollment as shown on the documentation from the Medicare sponsored plan or TRICARE program (including the Uniformed Services Family Health Plan).

(2) A former spouse who suspended coverage in the FEHB Program to enroll in a Medicare sponsored plan, or to use TRICARE (including the Uniformed Services Family Health Plan), but now wants to reenroll in the FEHB Program for any reason other than an involuntary loss of coverage, may do so during the next available Open Season (as provided by paragraph (f) of this section).

(i) Reenrollment of former spouses who suspended enrollment because of eligibility under Medicaid or a similar State-sponsored program of medical assistance for the needy.

(1) A former spouse who had been enrolled for coverage under this part and suspended the enrollment because he or she furnished proof of eligibility for coverage under the Medicaid program or a similar State-sponsored program of medical assistance for the needy (as provided in § 890.807(e)), or who meets the eligibility requirements of § 890.803 and the application time limitation requirements of § 890.805, but postponed enrollment for this reason, and who involuntarily loses that coverage, may reenroll in any available plan under this part at any time

beginning 31 days before and ending 60 days after the loss of Medicaid or similar State-sponsored coverage. A reenrollment under this paragraph (i)(1) of this section takes effect on the date following the date of loss of Medicaid or similar State-sponsored coverage.

(2) A former spouse who suspended enrollment in the FEHB Program because he or she furnished proof of eligibility for coverage under the Medicaid program or a similar State-sponsored program of medical assistance for the needy, and who wishes to reenroll in a plan under this part for reasons other than an involuntary loss of that coverage, may do so during the next available Open Season as provided by paragraph (f) of this section.

5. In § 890.807 paragraphs (e)(2) and (e)(4) are revised to read as follows:

§ 890.807 Termination of enrollment.

* * * * *

(e) * * *

(2) A former spouse may suspend enrollment in FEHB for the purpose of enrolling in Medicare sponsored plan under sections 1833, 1876, or 1851 of the Social Security Act, or to enroll in the Medicaid program or a similar State-sponsored program of medical assistance for the needy, or for the purpose of using TRICARE coverage (including the Uniformed Services Family Health Plan) under title 10 U.S.C. instead of FEHB coverage. To suspend FEHB coverage, documentation must be submitted to the employing office or retirement system within the period beginning 31 days before and ending 31 days after the effective date of the enrollment in the Medicare sponsored plan, or the Medicaid or similar program, or the first day of using TRICARE (including the Uniformed Services Family Health Plan) instead of FEHB coverage. The suspension becomes effective on the day before the effective date of the enrollment in the Medicare sponsored plan, or the Medicaid or similar program, or the day before the day designated by the former spouse as the first day of using TRICARE (including the Uniformed Services Family Health Plan) instead of FEHB coverage.

* * * * *

(4) A former spouse who cancels his or her enrollment for any reason may not later reenroll in the FEHB Program.

[FR Doc. 01–24108 Filed 9–25–01; 8:45 am]

BILLING CODE 6325–50–P

DEPARTMENT OF AGRICULTURE

Agricultural Marketing Service

7 CFR Part 905

[Docket No. FV01–905–1 IFR]

Oranges, Grapefruit, Tangerines, and Tangelos Grown in Florida; Limiting the Volume of Small Red Seedless Grapefruit

AGENCY: Agricultural Marketing Service, USDA.

ACTION: Interim final rule with request for comments.

SUMMARY: This rule limits the volume of small red seedless grapefruit entering the fresh market under the marketing order covering oranges, grapefruit, tangerines, and tangelos grown in Florida. The marketing order is administered locally by the Citrus Administrative Committee (Committee). This rule limits the volume of sizes 48 and 56 red seedless grapefruit shipped during the first 11 weeks of the 2001–2002 season. This rule establishes the weekly base percentages for each of the 11 weeks beginning in September. This limitation supplies enough small red seedless grapefruit, without saturating all markets with these small sizes. This rule should help stabilize the market and improve grower returns.

DATES: Effective September 17, 2001; comments received by October 9, 2001 will be considered prior to issuance of a final rule.

ADDRESSES: Interested persons are invited to submit written comments concerning this rule. Comments must be sent to the Docket Clerk, Marketing Order Administration Branch, Fruit and Vegetable Programs, AMS, USDA, room 2525–S, P.O. Box 96456, Washington, DC 20090–6456; Fax: (202) 720–8938, or e-mail: *moab.docketclerk@usda.gov.* All comments should reference the docket number and the date and page number of this issue of the **Federal Register** and will be available for public inspection in the Office of the Docket Clerk during regular business hours, or can be viewed at: *http://www.ams.usda.gov/fv/moab.html.*

FOR FURTHER INFORMATION CONTACT: William G. Pimental, Southeast Marketing Field Office, Marketing Order Administration Branch, Fruit and Vegetable Programs, AMS, USDA, P.O. Box 2276, Winter Haven, Florida 33883–2276; telephone: (863) 299–4770, Fax: (863) 299–5169; or George Kelhart, Technical Advisor, Marketing Order Administration Branch, Fruit and Vegetable Programs, AMS, USDA, room 2525–S, P.O. Box 96456, Washington, DC 20090–6456; telephone: (202) 720–2491, Fax: (202) 720–8938.

Small businesses may request information on complying with this regulation by contacting Jay Guerber, Marketing Order Administration Branch, Fruit and Vegetable Programs, AMS, USDA, room 2525–S, P.O. Box 96456, Washington, DC 20090–6456; telephone (202) 720–2491, Fax: (202) 720–8938, or e-mail: *Jay.Guerber@usda.gov.*

SUPPLEMENTARY INFORMATION: This rule is issued under Marketing Agreement No. 84 and Marketing Order No. 905, both as amended (7 CFR part 905), regulating the handling of oranges, grapefruit, tangerines, and tangelos grown in Florida, hereinafter referred to as the ''order.'' The marketing agreement and order are effective under the Agricultural Marketing Agreement Act of 1937, as amended (7 U.S.C. 601–674), hereinafter referred to as the ''Act.''

The Department of Agriculture (Department) is issuing this rule in conformance with Executive Order 12866.

This rule has been reviewed under Executive Order 12988, Civil Justice Reform. This rule is not intended to have retroactive effect. This rule will not preempt any State or local laws, regulations, or policies, unless they present an irreconcilable conflict with this rule.

The Act provides that administrative proceedings must be exhausted before parties may file suit in court. Under section 608c(15)(A) of the Act, any handler subject to an order may file with the Secretary a petition stating that the order, any provision of the order, or any obligation imposed in connection with the order is not in accordance with law and request a modification of the order or to be exempted therefrom. A handler is afforded the opportunity for a hearing on the petition. After the hearing the Secretary would rule on the petition. The Act provides that the district court of the United States in any district in which the handler is an inhabitant, or has his or her principal place of business, has jurisdiction to review the Secretary's ruling on the petition, provided an action is filed not later than 20 days after the date of the entry of the ruling.

The order provides for the establishment of grade and size requirements for Florida citrus, with the concurrence of the Secretary. These requirements are designed to provide fresh markets with citrus of acceptable quality and size, to increase returns to

Florida citrus growers. This helps create buyer confidence and contributes to stable marketing conditions and is in the interest of growers, handlers, and consumers. The current minimum grade standard for red seedless grapefruit is U.S. No. 1, and the minimum size requirement is size 56 (at least 3 5/16 inches in diameter).

This rule invites comments on limiting the volume of sizes 48 (at least 3 9/16 inches in diameter) and 56 (at least 3 5/16 inches in diameter) red seedless grapefruit shipped during the first 11 weeks of the 2001–2002 season beginning September 17, 2001. This rule establishes the weekly base percentages for these small sizes at 45 percent for the first two weeks, 35 percent for week 3, 30 percent for weeks 4 through 10, and 40 percent for week 11. This rule supplies enough small-sized red seedless grapefruit to meet market demand, without saturating all markets with these small sizes. This rule will help stabilize the market and improve grower returns.

Section 905.52 of the order provides authority to limit shipments of any grade or size, or both, of any variety of Florida citrus. Such limitations may restrict the shipment of a portion of a specified grade or size of a variety. Under such a limitation, the quantity of such grade or size that a handler may ship during a particular week is established as a percentage of the total shipments of such variety shipped by a handler in a prior period, established by the Committee and approved by the Secretary.

Section 905.153 of the regulations provides procedures for limiting the volume of small red seedless grapefruit entering the fresh market. The procedures specify that the Committee may recommend that only a certain percentage of sizes 48 and 56 red seedless grapefruit be made available for shipment into fresh market channels for any week or weeks during the regulatory period. The regulation period is 11 weeks long and begins the third Monday in September. Under such a limitation, the quantity of sizes 48 and 56 red seedless grapefruit that may be shipped by a handler during a regulated week is calculated using the recommended percentage. By taking the recommended weekly percentage times the average weekly volume of red seedless grapefruit handled by such handler in the previous five seasons, handlers can calculate the total volume of sizes 48 and 56 they may ship in a regulated week.

This rule limits the volume of sizes 48 and 56 red seedless grapefruit entering the fresh market by setting weekly percentages of 45 percent for the first two weeks, 35 percent for week 3, 30 percent for weeks 4 through 10, and 40 percent for week 11. This is a change from the percentages originally recommended by the Committee.

On May 22, 2001, the Committee unanimously voted to establish a weekly percentage of 45 percent for the first 2 weeks, 35 percent for week 3, and 25 percent for weeks 4 through 11. The Committee's initial recommendation was issued as a proposed rule published in the **Federal Register** on July 31, 2001 (66 FR 39459). No comments were received during the comment period, which expired August 10, 2001. The Committee subsequently met on August 29, 2001, and unanimously recommended adjusting the proposed percentages.

In the past four seasons, the initial recommendation from the Committee was to set the weekly percentages at 25 percent for each of the 11 weeks. Then, as more information on the crop became available, the Committee would meet and adjust its recommendations as needed. In each of the past seasons of regulation the Committee has recommended relaxing its initial recommendation of 25 percent for each week. Actual weekly percentages established for the 11-week period during the 2000–01 season were 45 percent for the first three weeks, 40 percent for the next four weeks, and 35 percent for the last four weeks.

Drawing on this experience, this season the Committee decided to make its initial recommendation for the first three weeks at levels higher than 25 percent. Based on shipments from the past four seasons, under a 25 percent restriction available allotment would have exceeded actual shipments of sizes 48 and 56 for each of the first three weeks regulated under this rule. The Committee believed that by setting weekly percentages at 45 percent for the first two weeks and 35 percent for the third week, handlers would have extra allotment available, providing individual handlers with greater flexibility and reducing the number of loans and transfers needed to use the available allotment.

For the remainder of the 11 weeks, the Committee believed that the weekly percentages needed to be set at 25 percent. The Committee thought it was best to recommend regulation at these levels, given the limited information available so early in the growing year, and then reexamine the percentages using information available closer to the start of the season.

The Committee met on August 29, 2001, and revisited the weekly percentage issue and reviewed information it had acquired since its May meeting. The Committee recognizes the need for and the benefits of the weekly percentage regulation. Members believe that the problems associated with an uncontrolled volume of small sizes entering the market early in the season will recur without such action. However, the Committee believes based on information now available that the initial recommendation was too restrictive, and recommended raising the established base percentages from 25 percent to 30 percent for weeks 4 through 10 and 40 percent for week 11 of the regulated period.

In its discussion, the Committee reviewed the initial weekly percentages recommended and the current state of the crop. The Committee also reexamined shipping information from past seasons, looking particularly at volume across the 11 weeks. At the time of the May meeting, grapefruit had not yet begun to size, giving little indication as to the distribution of sizes. Only the most preliminary of crop estimates was available, with the official estimate not to be issued until October.

The Committee considered the percentages set last year as a basis for discussing this year's percentages. Committee members believed relaxing last season's percentages from the initial 25 percent level had worked well, providing some restriction while affording volume for those markets that prefer small sizes.

Early indications were that conditions this year would be similar to those of last season with the production area dealing with the effects of a prolonged drought. The insufficient rainfall early this season could have affected the sizing of the crop, producing a larger volume of small red seedless grapefruit, further exacerbating the problem with small sizes. However, current information indicates that the 2001–2002 season crop seems to be sizing well. Due to increased rainfall in most growing areas the last two months, the industry may see a higher percentage of larger sizes than in the last four seasons. Hence, the Committee thought establishing the weekly percentages at 25 percent for weeks 4 through 11 may be too restrictive.

Ongoing problems affecting the European and Asian markets also continue to be a factor. These markets have historically shown a strong demand for small red seedless grapefruit. However, in the past few years there has been a reduction from the demand levels of previous seasons. This is expected to continue during the upcoming season. This could result in a

greater amount of small sizes for remaining markets to absorb, further supporting the need for some restrictions to prevent the volume of small sizes from disrupting all markets.

The Committee also considered the reduction in the overall available weekly industry base due to industry consolidation, reduced shipments, and packinghouse closings. The available weekly industry base is the sum of each individual handler's weekly base. The overall available industry base per week was 875,688 cartons last season. For the 2001–2002 season, the base calculates to 813,191 cartons.

Considering the actual percentages established during past seasons, the available sizing information, and the reduction in total industry base the Committee recommended establishing the weekly percentages at levels higher than 25 percent for the last 8 weeks of the regulated period. The Committee agreed that the percentage recommended for the first two weeks of 45 percent was still appropriate, as was 35 percent for week three. However, the Committee recommended that weeks 4 through 10 should be established at 30 percent, and that week 11 should be established at 40 percent. The Committee recommended setting the percentage for week 11 at a higher level because that week marks the start of the holiday season and a large volume of small sizes are used for gift fruit shipments and fundraisers. These percentages when compared to last season's percentages represent a 10 percent decrease for weeks three through seven, a 5 percent decrease for weeks eight through ten, and a 5 percent increase for week 11.

The Committee could meet again during the regulation period, as needed, when additional information is available, and determine whether the set percentage levels are appropriate. Changing the weekly percentages established by this rule would require additional rulemaking and the approval of the Secretary.

For the seasons 1994–95, 1995–96, and 1996–97, returns for red seedless grapefruit had been declining, often not returning the cost of production. On-tree prices for red seedless grapefruit had fallen steadily from $9.60 per carton (4/5 bushel) during the 1989–90 season, to $3.45 per carton during the 1994–95 season, to $1.41 per carton during the 1996–97 season.

The Committee determined that one problem contributing to the market's condition was the excessive number of small-sized grapefruit shipped early in the marketing season. In the 1994–95, 1995–96, and 1996–97 seasons, sizes 48 and 56 accounted for 34 percent of total shipments during the 11-week regulatory period, with the average weekly percentage exceeding 40 percent of shipments. This contrasted with sizes 48 and 56 representing only 26 percent of total shipments for the remainder of the season.

While there is a market for early grapefruit, shipping large quantities of small red seedless grapefruit in a short period oversupplies the fresh market for these sizes and negatively impacts the market for all sizes. For the majority of the season, larger sizes return higher prices than smaller sizes. However, there is a push to get fruit into the market early to take advantage of high prices available at the beginning of the season. The early season crop tends to have a greater percentage of small sizes. This creates a glut of smaller, lower-priced fruit on the market, driving down the price for all sizes.

At the start of the season, larger-sized fruit command a premium price. In some cases, the f.o.b. price is $4 to $10 more a carton than for the smaller sizes. In October, the f.o.b. price for a size 27 averages around $14.00 per carton. This compares to an average f.o.b. price of $6.00 per carton for size 56. In the three years before the issuance of a percentage size regulation, the f.o.b. price for large sizes dropped to within $1 or $2 of the f.o.b. price for small sizes by the end of the 11-week period covered in this rule.

In the three seasons prior to 1997–98, prices of red seedless grapefruit fell from a weighted average f.o.b. price of $7.80 per carton to an average f.o.b. price of $5.50 per carton during the period covered by this rule. Later in the season the crop sized to naturally limit the amount of smaller sizes available for shipment. However, the price structure in the market had already been negatively affected. The market never recovered, and the f.o.b. price for all sizes fell to around $5.00 to $6.00 per carton for most of the rest of the season.

An economic study done by the University of Florida—Institute of Food and Agricultural Sciences (UF–IFAS) in May 1997, found that on-tree prices had fallen from a high near $7.00 per carton in 1991–92 to around $1.50 per carton for the 1996–97 season. The study projected that if the industry elected to make no changes, the on-tree price would remain around $1.50 per carton. The study also indicated that increasing minimum size restrictions could help raise returns.

The Committee believes the over shipment of smaller sized red seedless grapefruit contributes to poor returns for growers and lower on-tree values. To address this issue, the Committee successfully used the provisions of § 905.153, and recommended weekly percentage of size regulation during the first 11 weeks of the 1997–98, 1998–99, 1999–2000, and 2000–01 seasons. Under regulation, f.o.b. and on-tree prices have increased and movement has stabilized.

Average f.o.b. prices have been higher during regulation than for the three years prior to regulation. The average price for red seedless grapefruit in late October was $8.46 for the last four years compared to $7.22 for the same period for the three years prior to regulation. Prices also remained at a higher level, with a weighted average price of $7.29 in mid-December during regulation compared to $6.02 for the three years prior to regulation. The average season price was also higher, with the past four seasons averaging $7.15 compared to $5.83 for the three prior years.

The on-tree prices per box for red seedless grapefruit for the fresh market have also improved during the past three years of regulation, providing better returns to growers. The on-tree price increased from $3.26 in 1996–97 to $3.42 in 1997–98, to $5.04 in 1998–99, to $5.62 for the 1999–2000 season.

Another benefit of regulation has been in maintaining higher prices for the larger-sized fruit. Larger fruit commands a premium price early in the season. However, the glut of smaller, lower-priced fruit on the early market was driving down the prices for all sizes. During the three years before regulation, the average differential between the f.o.b. carton price for a size 27 and a size 56 was $3.47 at the end of October. However, by mid-December the price for the larger size had dropped to within $1.68 of the price for the smaller-size fruit.

In the four years of regulation, the average differential between the f.o.b. carton price for a size 27 and a size 56 was $5.38 at the end of October and remained at $3.42 in mid-December. In fact, the average f.o.b. prices for each size were higher during the four years with regulation than for the three years prior to regulation. The average prices for size 27, size 32, size 36, and size 40 during the 11-week period for the last four years were $9.41, $8.12, $7.26, and $6.68, respectively. This compares to the average prices for the same sizes during the same period for the three years prior to regulation of $6.48, $5.63, $5.59, and $5.34, respectively.

The percentage size regulation has also helped stabilize the volume of small sizes entering the fresh market early in the season. During the three years prior to regulation, small sizes accounted for over 34 percent of the total shipments of red seedless

grapefruit during the 11-week period covered in the rule. This compares to 31 percent for the same period for the last four years of regulation. There has also been a 43 percent reduction in the volume of small sizes entering the fresh market during the 11-week regulatory period from 1995–96 to 2000–01.

An economic study done by Florida Citrus Mutual (Lakeland, Florida) in April 1998, found that the weekly percentage regulation had been effective. The study stated that part of the strength in early season pricing appeared to be due to the use of the weekly percentage rule to limit the volume of sizes 48 and 56. It said that prices were generally higher across the size spectrum with sizes 48 and 56 having the largest gains, and larger-sized grapefruit registering modest improvements. The rule shifted the size distribution toward the higher-priced, larger-sized grapefruit, which helped raise weekly average f.o.b. prices. It further stated that sizes 48 and 56 grapefruit accounted for around 27 percent of domestic shipments during the same 11 weeks during the 1996–97 season. Comparatively, sizes 48 and 56 accounted for only 17 percent of domestic shipments during the same period in 1997–98, as small sizes were used to supply export customers with preferences for small-sized grapefruit.

During deliberations in past seasons, the Committee considered how shipments had affected the market. Based on available statistical information, the Committee members concluded that once shipments of sizes 48 and 56 reached levels above 250,000 cartons a week, prices declined on those and most other sizes of red seedless grapefruit. The Committee believed that if shipments of small sizes could be maintained at around or below 250,000 cartons a week, prices should stabilize and demand for larger, more profitable sizes should increase.

Last season, the weekly shipments of sizes 48 and 56 red seedless grapefruit remained below 250,000 cartons for 10 of the 11 regulated weeks. This may have contributed to the success of the regulation.

In setting the weekly percentages at 45 percent for the first two weeks and 35 percent for week 3, the total available allotment would be slightly more than 250,000 cartons in the first three weeks. However, in the last four seasons, shipments of sizes 48 and 56 have never exceeded 250,000 cartons during the first three weeks. Also, setting the weekly percentages at 25 percent for the 2001–2002 season would have provided a total available allotment of approximated 203,300 cartons (25 percent of the total industry base of 813,191 cartons). Consequently, there is room to increase the percentages while holding weekly shipments of sizes 48 and 56 close to the 250,000-carton mark, as was done last season.

Therefore, this rule establishes the weekly percentages at 45 percent for the first two weeks, 35 percent for week 3, 30 percent for weeks 4 through 10, and 40 percent for week 11 for this season. The Committee plans to meet as needed during the 11-week period to ensure the weekly percentages are at the appropriate levels.

Under § 905.153, the quantity of sizes 48 and 56 red seedless grapefruit a handler may ship during a regulated week is calculated using the recommended percentage. By taking the weekly percentage times the average weekly volume of red seedless grapefruit handled by such handler in the previous five seasons, handlers can calculate the total volume of sizes 48 and 56 they may ship in a regulated week.

The Committee calculates an average week for each handler. To calculate an average week, the total red seedless grapefruit shipments by a handler during the 33 week period beginning the third Monday in September and ending the first Sunday in May from the previous five seasons are added together, then divided by five to establish an average season. This average season is divided by the 33 weeks to derive the average week. This average week is the base for each handler for each of the 11 weeks of the regulatory period.

The weekly percentage is multiplied by a handler's average week. The product is that handler's total allotment of sizes 48 and 56 red seedless grapefruit for the given week. Handlers can fill their allotment with size 56, size 48, or a combination of the two sizes such that the total of these shipments is within the established limits. The Committee staff performs the specified calculations and provides them to each handler.

The average week for handlers with less than five previous seasons of shipments is calculated by averaging the total shipments for the seasons they did ship red seedless grapefruit during the previous five years and dividing that average by 33. New handlers with no record of shipments have no prior period on which to base their average week. Therefore, a new handler can ship small sizes equal to 45 percent of their total volume of shipments during their first shipping week. Once a new handler has established shipments, their average week is calculated as an average of the weeks they have shipped during the current season.

The regulatory period begins the third Monday in September, September 17, 2001. Each regulation week begins Monday at 12 a.m. and ends at 11:59 p.m. the following Sunday, since most handlers keep records based on Monday as the beginning of the workweek.

The rules and regulations governing percentage size regulation contain a variety of provisions designed to provide handlers with some marketing flexibility. Section 905.153(d) provides allowances for overshipments, loans, and transfers of allotment. These provisions should allow handlers the opportunity to supply their markets while limiting the impact of small sizes.

The Committee can also act on behalf of handlers wanting to arrange allotment loans or participate in the transfer of allotment. Repayment of an allotment loan is at the discretion of the handlers party to the loan. The Committee informs each handler of the quantity of sizes 48 and 56 red seedless grapefruit they can handle during a particular week, making the necessary adjustments for overshipments and loan repayments.

This rule does not affect the provision that handlers may ship up to 15 standard packed cartons (12 bushels) of fruit per day exempt from regulatory requirements. Fruit shipped in gift packages that are individually addressed and not for resale, and fruit shipped for animal feed are also exempt from handling requirements under specific conditions. Also, fruit shipped to commercial processors for conversion into canned or frozen products or into a beverage base are not subject to the handling requirements under the order.

At its May 22 meeting, the Committee also recommended changing the percentage size procedures in § 905.153 to authorize percentage size regulation for an additional 11 weeks, or the first 22 weeks of the season. A proposed rule to revise § 905.153 to implement this recommendation will be published in a separate issue of the **Federal Register**. If the authority to establish percentages for the additional 11 weeks is implemented, the Committee would be able to implement, with Department approval, marketing percentages to limit the shipment of small-sized red seedless grapefruit for that additional time period, if warranted.

Section 8e of the Act requires that whenever grade, size, quality, or maturity requirements are in effect for certain commodities under a domestic marketing order, including grapefruit, imports of that commodity must meet the same or comparable requirements. This rule does not change the minimum

grade and size requirements under the order, only the percentages of sizes 48 and 56 red grapefruit that may be handled. Therefore, no change is necessary in the grapefruit import regulations as a result of this action.

Initial Regulatory Flexibility Analysis

Pursuant to requirements set forth in the Regulatory Flexibility Act (RFA), the Agricultural Marketing Service (AMS) has considered the economic impact of this action on small entities. Accordingly, AMS has prepared this initial regulatory flexibility analysis.

The purpose of the RFA is to fit regulatory actions to the scale of business subject to such actions in order that small businesses will not be unduly or disproportionately burdened. Marketing orders issued pursuant to the Act, and rules issued thereunder, are unique in that they are brought about through group action of essentially small entities acting on their own behalf. Thus, both statutes have small entity orientation and compatibility.

There are approximately 75 grapefruit handlers subject to regulation under the order and approximately 11,000 growers of citrus in the regulated area. Small agricultural service firms, which includes handlers, are defined by the Small Business Administration (SBA) as those having annual receipts of less than $5,000,000, and small agricultural producers are defined as those having annual receipts of less than $750,000 (13 CFR 121.201).

Based on industry and Committee data, the average annual f.o.b. price for fresh Florida red seedless grapefruit during the 2000–01 season was approximately $7.20 per 4/5 bushel carton, and total fresh shipments for the 2000–01 season are estimated at 24.7 million cartons of red grapefruit. Approximately 25 percent of all handlers handled 70 percent of Florida grapefruit shipments. In addition, many of these handlers ship other citrus fruit and products which are not included in Committee data but would contribute further to handler receipts. Using the average f.o.b. price, about 69 percent of grapefruit handlers could be considered small businesses under SBA's definition. Therefore, the majority of Florida grapefruit handlers may be classified as small entities. The majority of Florida grapefruit producers may also be classified as small entities.

The over shipment of small-sized red seedless grapefruit early in the season has contributed to poor returns for growers and lower on tree values. This rule limits the volume of sizes 48 and 56 red seedless grapefruit entering the fresh market during the first 11 weeks of the 2001–02 season, beginning September 17, 2001, by setting weekly percentages governing the volume of small sizes that may be shipped. This rule sets the weekly percentages at 45 percent for the first two weeks, 35 percent for week 3, 30 percent for weeks 4 through 10, and 40 percent for week 11. This is a change from the Committee's original recommendation of 45 percent for the first two weeks, 35 percent for week 3, and 25 percent for the remaining 8 weeks. The quantity of sizes 48 and 56 red seedless grapefruit that may be shipped by a handler during a particular week is calculated using the recommended percentage for that week. This rule uses the provisions of § 905.153. Authority for this action is provided in § 905.52 of the order.

While this rule may necessitate spot picking, which could entail slightly higher harvesting costs, many in the industry are already using the practice. In addition, because this regulation is only in effect for part of the season, the overall effect on costs is minimal. This rule is not expected to appreciably increase costs to producers.

If a 25 percent restriction on small sizes had been applied during the 11-week period for the three seasons prior to the 1997–98 season, an average of 4.2 percent of overall shipments during that period would have been constrained by regulation. A large percentage of this volume most likely could have been replaced by larger sizes for which there are no volume restrictions. Under regulation, larger sizes have been substituted for smaller sizes with a nominal effect on overall shipments.

In addition, handlers can transfer, borrow or loan allotment based on their needs in a given week. Handlers also have the option of over shipping their allotment by 10 percent in a week, provided the overshipment is deducted from the following week's shipments. Approximately 120 loans and transfers were utilized last season. Statistics for 2000–01 show that in none of the regulated weeks was the total available allotment used. Therefore, the overall impact of this regulation on total shipments should be minimal.

Handlers and producers have received higher returns under percentage size regulation. In late October, during the four years with regulation, the average f.o.b. price for red seedless grapefruit was $7.99 compared to $7.22 for the three years prior to regulation. F.o.b. prices have also remained higher, with an average price of $7.29 in mid-December during regulation compared to $6.02 for the three years prior to regulation. The average season price has also been higher under regulation averaging $7.14 compared to $5.83 for the three years prior.

On-tree earnings per box of red seedless grapefruit for the fresh market improved under regulation, providing better returns to growers. The on-tree price increased from $3.26 in 1996–97, to $3.42 for 1997–98, to $5.04 for 1998–99, to $5.62 for the 1999–2000 season. These increased returns when coupled with the overall volume of red seedless grapefruit should offset any additional costs associated with this regulation.

The purpose of this rule is to help stabilize the market and improve grower returns by limiting the volume of small sizes marketed early in the season. This rule provides a supply of small-sized red seedless grapefruit sufficient to meet market demand, without saturating all markets with these small sizes. The benefits of this rule are expected to be available to all red seedless grapefruit handlers and growers regardless of their size of operation.

This action is expected to stabilize the supply of small sizes entering the marketplace. It also is expected to encourage growers to leave the grapefruit on the tree longer, which improves size and maturity. Improved size and maturity provides greater consumer satisfaction and promotes repeat purchases. In addition, this action is not expected to decrease the overall consumption of red seedless grapefruit.

The Committee considered alternatives to taking this action. One alternative was to leave the established weekly percentages at 25 percent for weeks 4 through 11. The Committee thought this was too restrictive and wanted to provide individual handlers more flexibility in weeks 4 through 11; therefore this option was rejected.

In accordance with the Paperwork Reduction Act of 1995 (44 U.S.C. Chapter 35), the information collection requirements that are contained in this rule have been previously approved by the Office of Management and Budget (OMB) and assigned OMB No. 0581–0189. As with all Federal marketing order programs, reports and forms are periodically reviewed to reduce information requirements and duplication by industry and public sectors.

The Department has not identified any relevant Federal rules that duplicate, overlap or conflict with this rule. However, red seedless grapefruit must meet the requirements as specified in the U.S. Standards for Grades of Florida Grapefruit (7 CFR 51.760 through 51.784) issued under the Agricultural Marketing Act of 1946 (7 U.S.C. 1621 through 1627).

The Committee's meetings were widely publicized throughout the citrus industry and all interested persons were invited to attend the meetings and participate in Committee deliberations on all issues. Like all Committee meetings, the May 22, 2001, and the August 29, 2001, meetings were public meetings and all entities, both large and small, were able to express views on this issue. Interested persons are invited to submit information on the regulatory and informational impacts of this action on small businesses.

A small business guide on complying with fruit, vegetable, and specialty crop marketing agreements and orders may be viewed at: *http://www.ams.usda.gov/fv/moab.html.* Any questions about the compliance guide should be sent to Jay Guerber at the previously mentioned address in the **FOR FURTHER INFORMATION CONTACT** section.

A proposed rule concerning this action was published in the **Federal Register** on July 31, 2001 (66 FR 39459). Copies of the rule were mailed or sent via facsimile to all Committee members and to grapefruit growers and handlers. The Office of the Federal Register, the Department, and the Committee also made this rule available through the Internet.

A 10-day comment period was provided to allow interested persons to respond to the proposal. The comment period ended August 10, 2001. No comments were received.

As previously stated, subsequent to the issuance of the proposed rule, the Committee met and recommended modifying its original recommendation. The Committee recommended that the weekly percentages remain at 45 percent for the first two weeks (September 17 through September 30) and 35 percent for week three (October 1 through October 7), and that the percentages be changed from 25 percent to 30 percent for weeks 4 through 10 (October 1 through November 25), and to 40 percent for week 11 (November 26 through December 2). Because of this recommendation, the Department has determined that interested parties should be provided the opportunity to comment on the changes to the original recommendation. However, the Department has further determined that extending the comment period with no percentages in effect limiting the shipment of small red seedless grapefruit when the period of regulation begins would be detrimental to the industry. Therefore, the Department is instituting the regulations on small red seedless grapefruit through this interim final rule that allows 10 additional days to comment.

Ten days is deemed appropriate because the regulation period begins September 17, 2001, and continues for 11 weeks. Adequate time will be necessary so that any changes made to the regulations based on comments filed could be made effective during the 11 week period. All comments received will be considered before a final determination is made on this matter.

After consideration of all relevant material presented, including the information and recommendations submitted by the Committee, and other information, it is found that this rule, as hereinafter set forth, will tend to effectuate the declared policy of the Act.

Pursuant to 5 U.S.C. 553, it is also found and determined upon good cause that it is impracticable, unnecessary, and contrary to the public interest to give preliminary notice prior to putting this rule into effect and good cause exists for not postponing the effective date of this rule until 30 days after publication in the **Federal Register**. This rule needs to be in place when the regulatory period begins September 17, 2001, and handlers begin shipping grapefruit. This issue has been widely discussed at various industry and association meetings, and the Committee has kept the industry well informed. Interested persons have had time to determine and express their positions. Further, handlers are aware of this rule, which was recommended at public meetings. Also, a 10-day comment period was provided for in the proposed rule and a 10-day comment period is provided in this rule.

List of Subjects in 7 CFR Part 905

Grapefruit, Marketing agreements, Oranges, Reporting and recordkeeping requirements, Tangelos, Tangerines.

For the reasons set forth in the preamble, 7 CFR part 905 is amended as follows:

PART 905—ORANGES, GRAPEFRUIT, TANGERINES, AND TANGELOS GROWN IN FLORIDA

1. The authority citation for 7 CFR part 905 continues to read as follows:

Authority: 7 U.S.C. 601–674.

2. Section 905.350 is revised to read as follows:

§ 905.350 Red seedless grapefruit regulation.

This section establishes the weekly percentages to be used to calculate each handler's weekly allotment of small sizes. Handlers can fill their allotment with size 56, size 48, or a combination of the two sizes such that the total of these shipments are within the established weekly limits. The weekly percentages for size 48 (3 9/16 inches minimum diameter) and size 56 (3 5/16 inches minimum diameter) red seedless grapefruit grown in Florida, which may be handled during the specified weeks are as follows:

Week	Weekly Percentage
(a) 9/17/01 through 9/23/01	45
(b) 9/24/01 through 9/30/01	45
(c) 10/1/01 through 10/7/01	35
(d) 10/8/01 through 10/14/01	30
(e) 10/15/01 through 10/21/01 ..	30
(f) 10/22/01 through 10/28/01 ...	30
(g) 10/29/01 through 11/4/01	30
(h) 11/5/01 through 11/11/01	30
(i) 11/12/01 through 11/18/01 ...	30
(j) 11/19/01 through 11/25/01 ...	30
(k) 11/26/01 through 12/2/01	40

Dated: September 21, 2001.

Kenneth C. Clayton,

Acting Administrator, Agricultural Marketing Service.

[FR Doc. 01–24061 Filed 9–21–01; 2:00 pm]

BILLING CODE 3410–02–P

DEPARTMENT OF THE TREASURY

Office of the Comptroller of the Currency

12 CFR Parts 5 and 28

[Docket No. 01–21]

RIN 1557–AB92

Operating Subsidiaries of Federal Branches and Agencies

AGENCY: Office of the Comptroller of the Currency, Treasury.

ACTION: Final rule.

SUMMARY: Consistent with the principle of national treatment for foreign banks operating in the United States established by the International Banking Act of 1978, the Office of the Comptroller of the Currency (OCC) is amending its regulations to provide that a Federal branch or agency may establish, acquire, or maintain an operating subsidiary in generally the same manner that a national bank may acquire or establish an operating subsidiary.

EFFECTIVE DATE: October 26, 2001.

FOR FURTHER INFORMATION CONTACT: Martha Clarke, Counsel, or Heidi M. Thomas, Counsel, Legislative and Regulatory Activities Division, 202–874–5090; or Carlos Hernandez, International Advisor, International

Banking and Finance Division, 202–874–4730.

SUPPLEMENTARY INFORMATION:

The Proposal

On December 5, 2000, the OCC published a notice of proposed rulemaking in the **Federal Register** (65 FR 75870) requesting comments on a proposal to clarify that a Federal branch or agency may establish and maintain an operating subsidiary in accordance with the procedures and requirements of 12 CFR 5.34.

12 CFR 5.34 sets forth application or notice procedures for national banks engaging in activities through an operating subsidiary. The procedures vary according to the condition of the bank and the character of the activities conducted through the operating subsidiary. Specifically, § 5.34(e)(5)(iv) provides that a national bank that is well capitalized and well managed may acquire or establish an operating subsidiary, or perform a new activity in an existing operating subsidiary, by filing a notice with the OCC within 10 days after acquiring or establishing the subsidiary, or commencing the activity, if the activities are listed in § 5.34(e)(5)(v). National banks that do not meet the well capitalized and well managed criteria also may acquire or establish an operating subsidiary by filing an application with, and receiving approval from, the OCC. 12 CFR 5.34(e)(5)(i). Finally, § 5.34(e)(5)(vi) provides that a national bank may acquire or establish an operating subsidiary without filing an application or providing notice to the OCC if certain conditions are satisfied. These conditions are that: (1) The bank must be at least adequately capitalized; (2) the activities of the new subsidiary must be limited to those previously reported by the bank in connection with a prior operating subsidiary; (3) the activities must continue to be legally permissible; and (4) the activities of the new subsidiary must be conducted in accordance with any conditions imposed by the OCC when it approved the activities for the prior subsidiary.

The proposal specifically provided that § 5.34 applies to a Federal branch or agency that seeks to establish or maintain any subsidiary that a national bank would be authorized to acquire or establish under § 5.34. However, the procedures of § 5.34 would apply to the Federal branch or agency with certain modifications to reflect the differences in the relationship between a Federal branch or agency and a subsidiary of the foreign bank as compared with a national bank and its operating subsidiary. Unlike a national bank, a Federal branch or agency is not a separate corporate entity but rather is an office of the parent foreign bank, separately recognized for regulatory purposes. Although a Federal branch or agency cannot directly own stock in the same manner as a national bank, the Federal branch or agency can book the stock as an asset and manage and operate the subsidiary.

However, as we noted in the proposal, the International Banking Act of 1978 (12 U.S.C. 3101 *et seq.*) (the IBA) applies the national treatment principle to the regulation of foreign bank activities in the United States. Under the national treatment principle, the operations of a foreign bank conducted through a Federal branch or agency generally are conducted with the same rights, privileges, conditions, and limitations that apply to a national bank operating at the same location, subject to the OCC's regulations or orders.[1] 12 U.S.C. 3102(b). Thus, the IBA currently provides authority for Federal branches and agencies to take advantage of powers authorized for national banks, including the power to establish an operating subsidiary.

A branch or agency may obtain various legal, business or tax advantages by conducting certain activities or holding investments through an operating subsidiary. For example, a special purpose vehicle may be useful to engage in some asset-securitization transactions. In addition, legal restrictions, including the ''securities push-out'' provisions of the Gramm-Leach-Bliley Act, may make conduct of certain activities through a subsidiary necessary or advantageous for a branch or agency of a foreign bank.[2]

Description of Comments Received and Final Rule

The OCC received seven comments on the proposal. These comments include three from Federal branches or foreign banks with Federal branches; two from banking trade associations; one from a law firm; and one from the Board of Governors of the Federal Reserve System (Federal Reserve Board or Board). We are adopting the rule as proposed but with several clarifications to address differences in how the standards apply to Federal branches and agencies versus domestic banks.

A majority of the commenters strongly endorsed amending 12 CFR 5.34 to permit Federal branches and agencies to establish or maintain operating subsidiaries to the same extent as national banks. Most commenters also thought that amending the IBA is not necessary to accomplish this goal. A majority of commenters also stated that the establishment and maintenance of these operating subsidiaries should be subject only to regulation by the OCC, as are subsidiaries of national banks, unless they are subject to functional regulation by the Securities and Exchange Commission, Commodity Futures Trading Commission, or state insurance commissioners. *See* 12 U.S.C. 1831v.

The Federal Reserve Board stated that it strongly supports the principle of national treatment for both foreign and domestic banking organizations. The Board said, however, that, in its view, an investment by a Federal branch or agency in an operating subsidiary is a direct investment by the foreign bank itself and is, therefore, subject to the Bank Holding Company Act (BHC Act). The Board recommended clarifying that a foreign bank that is establishing a nonbanking subsidiary in the United States must comply with section 4 of the BHC Act, including any requirement to file a prior notice with the Board under section 4(c)(8) of the BHC Act.

The Federal Reserve Board is the agency charged with the administration and interpretation of the BHC Act. Our proposal does not relieve a foreign bank that operates a Federal branch or agency from complying with laws administered by any other regulators, including the Federal Reserve Board, that might be applicable to the establishment or operation of a nonbanking subsidiary in the United States.[3]

[1] See *Conference of State Bank Supervisors* v. *Conover,* 715 F.2d 604, 615 (D.C. Cir. 1983), cert. denied, 466 U.S. 927 (1984) (confirming that Congress' overriding objective in enacting the IBA was to accord national treatment to foreign banks so that foreign banks are treated as competitive equals with their domestic counterparts).

[2] For similar reasons, the State of New York Banking Department authorized branches and agencies to establish subsidiaries to offer flexibility to foreign banking organizations to structure their businesses to attain efficiency and functionality. See State of New York Banking Department, Foreign Branches and Agencies Establishing Operating Subsidiaries—Guidance Letter (June 4, 2001). *http://www.banking.state.ny.us/lt010604.htm.*

[3] We note, however, the Board's procedures are similar to the OCC's in that the applicable requirements depend both on the condition of the bank and the nature of the activities to be conducted. As the Federal Reserve Board commented, under its regulations, a well capitalized and well managed foreign bank that satisfies the eligibility requirements that apply to financial holding companies is not required to file any prior notice with, or receive prior approval from, the Federal Reserve Board before investing in a nonbanking subsidiary that engages in activities that are financial in nature or incidental to a financial activity as identified in 12 CFR 225.86. This list includes many activities that could be conducted by an operating subsidiary of a national bank or Federal branch or agency. In addition, foreign banks that are not financial holding companies but that satisfy the Federal Reserve

Qualification Criteria

Under the proposal, a Federal branch or agency would be considered well capitalized if it meets the definition of ''well capitalized'' that the OCC uses when authorizing an extended examination cycle for certain Federal branches and agencies. *See* 12 CFR 4.7(b)(1)(iii).[4] Section 4.7(b)(1)(iii) requires that a foreign bank's most recently reported capital adequacy position consists of, or is equivalent to, Tier 1 and total risk-based capital ratios of at least 6 percent and 10 percent, respectively, on a consolidated basis; or the Federal branch or agency has maintained on a daily basis, over the past three quarters, eligible assets in an amount not less than 108 percent of the preceding quarter's average third party liabilities (determined consistently with applicable Federal and state law), and sufficient liquidity is currently available to meet obligations to third parties.

In addition, the proposal provided that a Federal branch or agency would be well managed if the Federal branch or agency had a composite Risk Management, Operational Controls, Compliance, and Asset Quality (ROCA) supervisory rating of 1 or 2 at its most recent examination; or in the case of a Federal branch or agency that has not been examined, the Federal branch or agency has and uses managerial resources that the OCC determines are satisfactory.

The Federal Reserve Board commented that the proposal might provide certain foreign banks with an advantage over U.S. banking organizations because it would allow a foreign bank to establish a subsidiary based solely on capital and managerial considerations at the local branch. The Board expressed a concern that this potentially would allow a foreign bank to expand its U.S. operations in a manner that a similarly situated national bank or bank holding company might not. It also stated that this differs from treatment under the BHC Act, which requires a foreign bank's capital and management factors to be evaluated on a consolidated basis. A number of other commenters strongly supported the proposed use of the composite ROCA rating to determine whether a Federal branch or agency is well managed, however, and at least one commenter supported the use of the rating as consistent with national treatment.

On balance we have concluded that the proposed qualification criteria are appropriate. The definition of ''well capitalized'' is consistent with the definition of that term that is applied for purposes of Prompt Corrective Action by the OCC to insured Federal branches and by the Federal Deposit Insurance Corporation (FDIC) to insured branches of foreign banks. See 12 CFR 6.5(c)(1) (OCC), 325.103(c)(1) (FDIC). As explained previously, it is the same definition used by all the Federal banking agencies for purposes of determining which branches and agencies of foreign banks are eligible for an extended examination cycle. See 12 CFR 4.7(b)(1)(iii); 211.26(c)(2)(i)(C), 347.214(b)(iii). We also note that the New York State Banking Department, which charters the largest number of state branches and agencies of foreign banks, permits state branches and agencies of foreign banks to establish operating subsidiaries. It has adopted the same definition of ''well capitalized'' as set forth in our proposal.[5] In addition, the definition only determines whether a notice or application procedure applies. Thus, any perceived advantage for foreign banks would be minimal. For these reasons, we are adopting the definition of ''well capitalized'' as proposed.

In addition, we do not believe that the proposal's definition of ''well-managed'' gives a competitive advantage to foreign banks. First, the definition does reflect the management of the foreign bank as a whole, because the composite ROCA supervisory rating currently takes into account the management of the foreign bank. In addition, the proposed definition is consistent with national treatment because it uses the same test as is used in 12 CFR 5.34(e)(5)(iv) for national banks acquiring or establishing an operating subsidiary or performing a new activity in an existing operating subsidiary subject to a 10-day after-the-fact notice requirement. Therefore, the final rule retains the proposal's definition of ''well-managed.''

Two commenters thought that the proposal should calculate Tier 1 and total risk-based capital ratios according to the home country standard for those international banks whose home country supervisors have adopted risk-based capital standards consistent with the Basel Capital Accord. The proposal's definition of ''well-capitalized'' is derived from the definition in 12 CFR 4.7(b)(1)(iii), which, as noted, is the standard that the Board, the FDIC, and the OCC adopted in a joint rulemaking extending the examination cycle for well-capitalized and well-managed branches and agencies of foreign banks that satisfy certain other criteria. *See* 64 FR 56949–53 (October 22, 1999). Thus, foreign banks are familiar with the standard. Moreover, in our view, it is preferable for purposes of eligibility to have an operating subsidiary, to use a standard that can be applied consistently to Federal branches and agencies rather than a standard that could vary depending on the details of implementation of the Basel Accord in different countries. We note, however, that in the examination-cycle rulemaking, the agencies stated that, in implementing the well-capitalized standard in individual cases, the home country supervisor's capital standards may be considered if those standards are in all respects consistent with the Basel Capital Accord. Id. at 56950 (preamble discussion). Similarly, for purposes of determining whether a foreign bank's consolidated capital position consists of, or is equivalent to, Tier 1 and total risk-based capital ratios of at least 6% and 10%, respectively, we may consider the capital standards of the home country supervisor if they are in all respects consistent with the Basel Accord.

Under § 5.34, an adequately capitalized national bank may acquire or establish an operating subsidiary without filing an application or notice under certain circumstances.[6] One commenter pointed out that the proposed rule does not specify how the ''adequately capitalized'' standard would be applied to foreign banks and suggests that an international bank is adequately capitalized for purposes of § 5.34 if its Tier 1 and total risk-based capital ratios, calculated under

Board's criteria may engage in certain nonbanking activities and acquisitions either subject to expedited notice procedures or without obtaining the Board's prior approval. *See* 12 CFR 225, Subpart C.

[4] 12 CFR 4.7 generally provides that the OCC may conduct a full-scope, on-site examination of certain well capitalized and well managed Federal branches and agencies at least once during each 18-month period, rather than each 12-month period. The FRB applies the same capital and management requirements when determining whether a State branch or agency will be subject to the 18-month examination schedule. 12 CFR 211.26(c)(2).

[5] See State of New York Banking Department, Foreign Branches and Agencies Establishing Operating Subsidiaries—Guidance Letter (June 4, 2001). *http://www.banking.state.ny.us/lt010604.htm.*

[6] To acquire or establish an operating subsidiary without filing an application or providing notice, a national bank must be at least adequately capitalized and must meet the following requirements: (A) activities of the new subsidiary must be limited to those activities previously reported by the bank in connection with the establishment or acquisition of a prior operating subsidiary; (B) activities in which the new subsidiary will engage must continue to be legally permissible for the subsidiary; and (C) activities of the new subsidiary must be conducted in accordance with any conditions imposed by the OCC in approving the conduct of these activities for any prior operating subsidiary of the bank. 12 CFR 5.34(e)(5)(vi).

applicable home country standards, are at least 4% and 8%, respectively. No OCC regulation currently defines ''adequately capitalized'' for foreign banks, nor do the Federal Reserve Board's regulations include such a definition. The OCC's regulations contain a definition of ''adequately capitalized'' that applies to insured Federal branches for purposes of Prompt Corrective Action but could not be applied to uninsured Federal branches. See 12 CFR 6.4(c)(2). Because this definition could not be applied to all of the Federal branches or agencies that may wish to have operating subsidiaries, the OCC will determine what ''adequately capitalized'' means for a Federal branch or agency in the context of acquiring, establishing, or maintaining an operating subsidiary on a case-by-case basis. Therefore, we have decided not to amend the proposal to include this definition.

Calculation of Capital Equivalency Deposit

In addition, one commenter thought that the final rule should state expressly that the OCC would not take into account the liabilities of an operating subsidiary in determining the amount of the capital equivalency deposit (CED) that must be pledged to the OCC. The commenter supported its request by stating that the operating subsidiary would have a separate corporate existence from the branch, and the branch would not be liable for the obligations of the operating subsidiary. Consequently, in the commenter's view, no purpose would be served by subjecting an operating subsidiary of a Federal branch to a CED requirement.

We disagree with this commenter that the CED should never reflect the liabilities of the Federal branch or agency's operating subsidiary. Consolidation of the Federal branch or agency with the operating subsidiary may increase risk under certain circumstances. For example, the Federal branch or agency could use the consolidated assets of the branch or agency and the operating subsidiary as the basis to increase a loan made to the branch or agency from a third party above the level for which it would qualify on an unconsolidated basis, or the operating subsidiary could increase its liabilities to fund operations of the Federal branch or agency as a way to avoid increasing the CED of the branch or agency.[7] In these situations, the CED may appropriately include the liabilities of the operating subsidiary. As a result, we have amended the CED provisions of 12 CFR 28.15 to permit the CED to be adjusted to include the liabilities of the operating subsidiary, if warranted for prudential or supervisory reasons. This action is consistent with national treatment since, for regulatory purposes, the capital level of a national bank is determined on a consolidated basis with its operating subsidiaries.

Clarification of How § 5.34 Would Apply to Federal Branches and Agencies

The proposal said that the OCC would apply other relevant regulatory standards to Federal branches and agencies that establish or maintain operating subsidiaries as appropriate in light of the differences in corporate structure between national banks and Federal branches and agencies. We have amended § 5.34 to further clarify how the regulation will apply to Federal branches and agencies.

For example, current § 5.34(e)(4) requires that pertinent book figures of the parent national bank and its operating subsidiary be combined for the purpose of applying statutory limitations when combination is needed to effect the intent of the statute, *e.g.*, for purposes of the statutory dividend restrictions, lending limits, or investments in bank premises. *See* 12 U.S.C. 56, 60, 84, and 371d. However, under the IBA, any limitation or restriction based on the capital of a national bank (e.g., the lending limit at 12 U.S.C. 84) would refer, as applied to a Federal branch or agency, to the dollar equivalent of the capital of the foreign bank. If the foreign bank has more than one Federal branch or agency, the business transacted by all of the branches and agencies is aggregated for purposes of determining compliance with the limitation. See 12 U.S.C. 3102(b). By regulation, the OCC and the Federal Reserve Board require that the transactions of *all* of a foreign bank's Federal branches and agencies and State branches and agencies be aggregated to determine compliance with the lending limits. See 12 CFR 28.14 (OCC), 211.28 (Federal Reserve Board). As a result, the final rule provides that, for purposes of the capital limitations and restrictions as applied to Federal branches and agencies under the IBA and 12 CFR 28.14, the business conducted by a foreign bank's Federal branches or agencies and its State branches and agencies, and their operating subsidiary, will be combined.

We have also clarified that the requirements in §§ 5.34(e)(2) and (e)(5)(i)(B) that expressly require that a parent national bank must have a specific ownership interest in an operating subsidiary apply to the parent foreign bank and not to the Federal branch or agency.

Finally, a commenter suggested that we clarify that the authority of a Federal branch or agency regarding operating subsidiaries, like that of a national bank extends not only to their establishment and maintenance, but also to their acquisition. The final rule reflects this suggestion.

Regulatory Flexibility Act Analysis

Pursuant to section 605(b) of the Regulatory Flexibility Act (RFA), 5 U.S.C. 605(b), the regulatory flexibility analysis otherwise required under section 603 of the RFA, 5 U.S.C. 603, is not required if the head of the agency certifies that the rule will not have a significant economic impact on a substantial number of small entities and the agency publishes such a certification and a statement explaining the factual basis for such certification in the **Federal Register** along with its final rule.

On the basis of the information currently available, the OCC is of the opinion that this final rule will not have a significant impact on a substantial number of small entities within the meaning of those terms as used in the RFA. The final regulation requires Federal branches and agencies that would like to acquire, establish, or maintain an operating subsidiary to file a notice or application with the OCC. However, the OCC does not believe that this requirement will have a significant impact on a substantial number of small entities. Fewer than 20 Federal branches and agencies could be considered small entities, and only some of these would acquire, establish, or maintain an operating subsidiary. Accordingly, a regulatory flexibility analysis is not required.

Unfunded Mandates Reform Act of 1995

Section 202 of the Unfunded Mandates Reform Act of 1995, Pub. L. 104–4 (Unfunded Mandates Act) requires that an agency prepare a budgetary impact statement before promulgating a rule that includes a Federal mandate that may result in expenditure by State, local, and tribal governments, in the aggregate, or by the private sector, of $100 million or more in any one year. If a budgetary impact statement is required, section 205 of the Unfunded Mandates Act also requires

[7] The statute states that ''amounts due and other liabilities to offices, branches, agencies, and subsidiaries'' of the foreign bank are excluded from calculations of the minimum amount of the CED, which is based on five percent of the total liabilities of the branch or agency. See 12 U.S.C. 3102(g)(2)(B).

an agency to identify and consider a reasonable number of regulatory alternatives before promulgating a rule. However, an agency is not required to assess the effects of its regulatory actions on the private sector to the extent that such regulations incorporate requirements specifically set forth in law. 2 U.S.C. 1531.

The OCC has determined that this final rule will not result in expenditures by State, local, or tribal governments or by the private sector of $100 million or more. Accordingly, the OCC has not prepared a budgetary impact statement or specifically addressed the regulatory alternatives considered.

Executive Order 12866 Determination

The Comptroller of the Currency has determined that this rule does not constitute a ''significant regulatory action'' for the purposes of Executive Order 12866.

Paperwork Reduction Act

The OCC may not conduct or sponsor, and an organization is not required to respond to, an information collection unless it displays a currently valid Office of Management and Budget (OMB) control number.

OMB has reviewed and approved the collection of information requirements contained in this rule under control number 1557–0215, in accordance with the Paperwork Reduction Act of 1995 (44 U.S.C. 3501 *et seq.*). OMB clearance will expire on January 31, 2004.

The OCC sought comment on all aspects of the burden estimates for the information collection contained in the proposed rule. The OCC received no comments.

The collections of information are contained in 12 CFR 5.34. Section 5.34 requires that Federal branches and agencies of foreign banks obtain OCC approval prior to establishing or maintaining any subsidiary that a national bank is authorized to establish or control under section 5.34.

The respondents are Federal branches and agencies of foreign banks.

Estimated number of respondents: 20.

Estimated number of responses: 20.

Estimated burden hours per response: 1 hour.

Frequency of response: On occasion.

Estimated total annual burden: 20 hours.

The OCC has a continuing interest in the public's opinion regarding collections of information. Members of the public may submit comments, at any time, regarding any aspects of these collections of information. Comments may be sent to Jessie Dunaway, Clearance Officer, Office of the Comptroller of the Currency, 250 E Street, SW, Mailstop 8–4, Washington, DC 20219.

Effective Date

This rule is effective on October 26, 2001. The Administrative Procedure Act (APA) generally requires that a final rule take effect 30 days after date of publication in the **Federal Register**, 5 U.S.C. 553(d). In addition, section 302 of the Riegle Community Development and Regulatory Improvement Act of 1994 (CDRI Act) generally requires that a final rule issued by a Federal banking agency that imposes additional reporting, disclosures, or other new requirements on insured depository institutions must take effect on the first day of a calendar quarter after the date of publication of the final rule. The OCC has determined that this rule may become effective in accordance with the APA requirement and that section 302 of the CDRI Act is not applicable. This final rule provides clarification of how existing procedures will be applied to Federal branches and agencies that choose to acquire, establish, or maintain an operating subsidiary and does not impose additional reporting, disclosure, or other new requirements.

List of Subjects

12 CFR Part 5

Administrative practice and procedure, National banks, Reporting and recordkeeping requirements, Securities.

12 CFR Part 28

Foreign banking, National banks, Reporting and recordkeeping requirements.

Authority and Issuance

For the reasons set forth in the preamble, the OCC amends parts 5 and 28 of chapter I of title 12 of the Code of Federal Regulations as follows:

PART 5—RULES, POLICIES, AND PROCEDURES FOR CORPORATE ACTIVITIES

1. The authority citation for part 5 is revised to read as follows:

Authority: 12 U.S.C. 1 *et seq.*, 24(a), 24 (Seventh), 93a, and 3101 *et seq.*

2. In § 5.34, revise paragraphs (a), (c), (d)(2), (d)(3), and (e)(4) to read as follows:

§ 5.34 Operating subsidiaries.

(a) *Authority.* 12 U.S.C. 24 (Seventh), 24a, 93a, 3101 *et seq.*

* * * * *

(c) *Scope.* This section sets forth authorized activities and application or notice procedures for national banks engaging in activities through an operating subsidiary. The procedures in this section do not apply to financial subsidiaries authorized under § 5.39. Unless provided otherwise, this section applies to a Federal branch or agency that acquires, establishes, or maintains any subsidiary that a national bank is authorized to acquire or establish under this section in the same manner and to the same extent as if the Federal branch or agency were a national bank, except that the ownership interest required in paragraphs (e)(2) and (e)(5)(i)(B) of this section shall apply to the parent foreign bank of the Federal branch or agency and not to the Federal branch or agency.

(d) * * *

(2) *Well capitalized* means the capital level described in 12 CFR 6.4(b)(1) or, in the case of a Federal branch or agency, the capital level described in by 12 CFR 4.7(b)(1)(iii).

(3) *Well managed* means, unless otherwise determined in writing by the OCC:

(i) In the case of a national bank:

(A) The national bank has received a composite rating of 1 or 2 under the Uniform Financial Institutions Rating System in connection with its most recent examination; or

(B) In the case of any national bank that has not been examined, the existence and use of managerial resources that the OCC determines are satisfactory.

(ii) In the case of a Federal branch or AGENCY:

(A) The Federal branch or agency has received a composite ROCA supervisory rating (which rates risk management, operational controls, compliance, and asset quality) of 1 or 2 at its most recent examination; or

(B) In the case of a Federal branch or agency that has not been examined, the existence and use of managerial resources that the OCC determines are satisfactory.

(e) ***

(4) *Consolidation of figures*—(i) *National banks.* Pertinent book figures of the parent national bank and its operating subsidiary shall be combined for the purpose of applying statutory or regulatory limitations when combination is needed to effect the intent of the statute or regulation, e.g., for purposes of 12 U.S.C. 56, 60, 84, and 371d.

(ii) *Federal branch or agencies.* Transactions conducted by all of a foreign bank's Federal branches and agencies and State branches and agencies, and their operating subsidiaries, shall be combined for the

purpose of applying any limitation or restriction as provided in 12 CFR 28.14.

PART 28—INTERNATIONAL BANKING ACTIVITIES

1. The authority citation for part 28 continues to read as follows:

Authority: 12 U.S.C. 1 *et seq.*, 24(Seventh), 93a, 161, 602, 1818, 3101 *et seq.*, and 3901 *et seq.*

2. In § 28.15, revise paragraph (b) to read as follows:

§ 28.15 Capital equivalency deposits

* * * * *

(b) *Increase in capital equivalency deposits.* For prudential or supervisory reasons, the OCC may require, in individual cases or otherwise, that a foreign bank increase its CED above the minimum amount. For example, the OCC may require an increase if a Federal branch or agency of the foreign bank increases its leverage through the establishment, acquisition, or maintenance of an operating subsidiary.

Dated: September 18, 2001.

John D. Hawke, Jr.,

Comptroller of the Currency.

[FR Doc. 01–24005 Filed 9–25–01; 8:45 am]

BILLING CODE 4810–33–P

FEDERAL RESERVE SYSTEM

12 CFR Part 201

[Regulation A]

Extensions of Credit by Federal Reserve Banks; Change in Discount Rate

AGENCY: Board of Governors of the Federal Reserve System.

ACTION: Final rule.

SUMMARY: The Board of Governors has amended its Regulation A, Extensions of Credit by Federal Reserve Banks to reflect its approval of a decrease in the basic discount rate at each Federal Reserve Bank. The Board acted on requests submitted by the Boards of Directors of the twelve Federal Reserve Banks.

DATES: The amendments to part 201 (Regulation A) were effective September 17, 2001. The rate changes for adjustment credit were effective on the dates specified in 12 CFR 201.51.

FOR FURTHER INFORMATION CONTACT: Jennifer J. Johnson, Secretary of the Board, at (202) 452–3259, Board of Governors of the Federal Reserve System, 20th and C Streets NW., Washington, DC 20551.

SUPPLEMENTARY INFORMATION: Pursuant to the authority of sections 10(b), 13, 14, 19, *et al.,* of the Federal Reserve Act, the Board has amended its Regulation A (12 CFR part 201) to incorporate changes in discount rates on Federal Reserve Bank extensions of credit. The discount rates are the interest rates charged to depository institutions when they borrow from their district Reserve Banks.

The ''basic discount rate'' is a fixed rate charged by Reserve Banks for adjustment credit and, at the Reserve Banks' discretion, for extended credit for up to 30 days. In decreasing the basic discount rate from 3.00 percent to 2.5 percent, the Board acted on requests submitted by the Boards of Directors of the twelve Federal Reserve Banks. The new rates were effective on the dates specified below. The 50-basis-point decrease in the discount rate was associated with a similar decrease in the federal funds rate approved by the Federal Open Market Committee (FOMC) and announced at the same time.

In a joint press release announcing these actions, the FOMC and the Board of Governors stated that the Federal Reserve will continue to supply unusually large volumes of liquidity to the financial markets, as needed, until more normal market functioning is restored. As a consequence, the FOMC recognizes that the actual federal funds rate may be below its target on occasion in these unusual circumstances.

Even before the tragic events of last week, employment, production, and business spending remained weak, and last week's events have the potential to damp spending further. Nonetheless, the long-term prospects for productivity growth and the economy remain favorable and should become evident once the unusual forces restraining demand abate. For the foreseeable future, the Board and the FOMC continue to believe that against the background of their long-run goals of price stability and sustainable economic growth and of the information currently available, the risks are weighted mainly toward conditions that may generate economic weakness.

Regulatory Flexibility Act Certification

Pursuant to section 605(b) of the Regulatory Flexibility Act (5 U.S.C. 605(b)), the Board certifies that the change in the basic discount rate will not have a significant adverse economic impact on a substantial number of small entities. The rule does not impose any additional requirements on entities affected by the regulation.

Administrative Procedure Act

The provisions of 5 U.S.C. 553(b) relating to notice and public participation were not followed in connection with the adoption of the amendment because the Board for good cause finds that delaying the change in the basic discount rate in order to allow notice and public comment on the change is impracticable, unnecessary, and contrary to the public interest in fostering price stability and sustainable economic growth.

The provisions of 5 U.S.C. 553(d) that prescribe 30 days prior notice of the effective date of a rule have not been followed because section 553(d) provides that such prior notice is not necessary whenever there is good cause for finding that such notice is contrary to the public interest. As previously stated, the Board determined that delaying the changes in the basic discount rate is contrary to the public interest.

List of Subjects in 12 CFR Part 201

Banks, Banking, Credit, Federal Reserve System.

For the reasons set out in the preamble, 12 CFR part 201 is amended as set forth below:

PART 201—EXTENSIONS OF CREDIT BY FEDERAL RESERVE BANKS (REGULATION A)

1. The authority citation for 12 CFR part 201 continues to read as follows:

Authority: 12 U.S.C. 343 *et seq.*, 347a, 347b, 347c, 347d, 348 *et seq.*, 357, 374, 374a and 461.

2. Section 201.51 is revised to read as follows:

§ 201.51 Adjustment credit for depository institutions.

The rates for adjustment credit provided to depository institutions under § 201.3(a) are:

Federal Reserve Bank	Rate	Effective
Boston	2.5	September 17, 2001.
New York	2.5	September 17, 2001.
Philadelphia	2.5	September 17, 2001.
Cleveland	2.5	September 17, 2001.
Richmond	2.5	September 17, 2001.
Atlanta	2.5	September 17, 2001.
Chicago	2.5	September 17, 2001.
St. Louis	2.5	September 18, 2001.

Federal Reserve Bank	Rate	Effective
Minneapolis	2.5	September 17, 2001.
Kansas City	2.5	September 17, 2001.
Dallas	2.5	September 17, 2001.
San Francisco	2.5	September 17, 2001.

By order of the Board of Governors of the Federal Reserve System, September 20, 2001.

Jennifer J. Johnson,

Secretary of the Board.

[FR Doc. 01–24000 Filed 9–25–01; 8:45 am]

BILLING CODE 6210–01–P

DEPARTMENT OF TRANSPORTATION

Federal Aviation Administration

14 CFR Part 39

[Docket No. 2001–NE–22–AD; Amendment 39–12445; AD 2001–19–05]

RIN 2120–AA64

Airworthiness Directives; Rolls-Royce plc. RB211 535 Turbofan Engines

AGENCY: Federal Aviation Administration, DOT.

ACTION: Final rule; request for comments.

SUMMARY: This amendment adopts a new airworthiness directive (AD) that is applicable to Rolls-Royce plc. (RR) models RB211–535C–37, RB211–535E4–37, RB211–535E4–B–37, and RB211–535E4–B–75 turbofan engines, with radial drive steady bearing, part number (P/N) LK76084. This action requires the replacement of certain radial drive steady bearings, installed in the high speed gearbox drive. This amendment is prompted by five reports of radial drive steady bearing failures. The actions specified in this AD are intended to reduce the risk of engine in-flight shutdown, due to failure at low life of radial drive steady bearings.

DATES: Effective October 11, 2001.

Comments for inclusion in the Rules Docket must be received on or before November 26, 2001.

ADDRESSES: Information regarding this action may be examined at the Federal Aviation Administration (FAA), New England Region, Office of the Regional Counsel, 12 New England Executive Park, Burlington, MA,. or at the Office of the Federal Register, 800 North Capitol Street, NW., suite 700, Washington, DC.

FOR FURTHER INFORMATION CONTACT: James Lawrence, Aerospace Engineer, Engine Certification Office, FAA, Engine and Propeller Directorate, 12 New England Executive Park, Burlington, MA 01803–5299; telephone (781) 238–7176; fax (781) 238–7199.

SUPPLEMENTARY INFORMATION: The Civil Aviation Authority (CAA), which is the airworthiness authority for the United Kingdom (UK), recently notified the FAA that an unsafe condition may exist on Rolls-Royce plc. models (RR) RB211–535C–37, RB211–535E4–37, RB211–535E4–B–37, and RB211–535E4–B–75 turbofan engines. The CAA advises that five reports of failure of the radial drive steady bearing have occurred, causing three in-flight shutdowns. Investigation has concluded that a number of radial drive steady bearings have been found with evidence of loose rivets after a short period in service and have a potential for low life failure as a result. This condition can lead to the eventual failure of the radial drive steady bearing and an in-flight shutdown.

Manufacturer's Service Information

Rolls-Royce plc has issued mandatory service bulletin (MSB) RB.211–72–D176, dated September 19, 2000, that specifies procedures for ensuring that all airplanes having engines with the affected bearing design installed, will meet the following criteria:

- Both radial drive steady bearings installed will have more than 600 flight hours accumulated on each engine, or
- At least one radial drive steady bearing installed will have more than 1,500 flight hours accumulated on one engine if the other engine has less than 600 accumulated flight hours, or
- One or both engines replace radial drive steady bearings of the affected design with new design bearings as specified in service bulletin (SB) RB.211–72–C925.

The CAA has classified this service bulletin as mandatory and issued AD 004–09–2000, dated September 19, 2000, in order to assure the airworthiness of these RR engines in the UK.

Bilateral Airworthiness Agreement

This engine model is manufactured in the UK, and is type certificated for operation in the United States under the provisions of section 21.29 of the Federal Aviation Regulations (14 CFR 21.29) and the applicable bilateral airworthiness agreement. Pursuant to this bilateral airworthiness agreement, the CAA has kept the FAA informed of the situation described above. The FAA has examined the findings of the CAA, reviewed all available information, and determined that AD action is necessary for products of this type design that are certificated for operation in the United States.

FAA's Determination of an Unsafe Condition and Required Actions

Since an unsafe condition has been identified that is likely to exist or develop on other Rolls-Royce plc. (RR) models RB211–535C–37, RB211–535E4–37, RB211–535E4–B–37, and RB211–535E4–B–75 turbofan engines of the same type design, this AD is being issued to reduce the risk of engine in-flight shutdown, due to failure at low life of radial drive steady bearings. This AD requires the replacement of certain radial drive steady bearings, based on their accumulated flight time.

Immediate Adoption of This AD

Since a situation exists that requires the immediate adoption of this regulation, it is found that notice and opportunity for prior public comment hereon are impracticable, and that good cause exists for making this amendment effective in less than 30 days.

Therefore, a situation exists that allows the immediate adoption of this regulation.

Comments Invited

Although this action is in the form of a final rule that involves requirements affecting flight safety and, thus, was not preceded by notice and an opportunity for public comment, comments are invited on this rule. Interested persons are invited to comment on this rule by submitting such written data, views, or arguments as they may desire. Communications should identify the Rules Docket number and be submitted in triplicate to the address specified under the caption ''**ADDRESSES.**'' All communications received on or before the closing date for comments will be considered, and this rule may be amended in light of the comments received. Factual information that supports the commenter's ideas and suggestions is extremely helpful in evaluating the effectiveness of the AD action and determining whether additional rulemaking action would be needed.

Comments are specifically invited on the overall regulatory, economic, environmental, and energy aspects of the rule that might suggest a need to modify the rule. All comments submitted will be available, both before and after the closing date for comments, in the Rules Docket for examination by interested persons. A report that summarizes each FAA-public contact concerned with the substance of this AD will be filed in the Rules Docket.

Commenters wishing the FAA to acknowledge receipt of their comments submitted in response to this action must submit a self-addressed, stamped postcard on which the following statement is made: ''Comments to Docket Number 2001–NE–22–AD.'' The postcard will be date stamped and returned to the commenter.

Regulatory Analysis

This final rule does not have federalism implications, as defined in Executive Order 13132, because it would not have a substantial direct effect on the States, on the relationship between the national government and the States, or on the distribution of power and responsibilities among the various levels of government. Accordingly, the FAA has not consulted with state authorities prior to publication of this final rule.

The FAA has determined that this regulation is an emergency regulation that must be issued immediately to correct an unsafe condition in aircraft, and is not a ''significant regulatory action'' under Executive Order 12866. It has been determined further that this action involves an emergency regulation under DOT Regulatory Policies and Procedures (44 FR 11034, February 26, 1979). If it is determined that this emergency regulation otherwise would be significant under DOT Regulatory Policies and Procedures, a final regulatory evaluation will be prepared and placed in the Rules Docket. A copy of it, if filed, may be obtained from the Rules Docket at the location provided under the caption **ADDRESSES.**

List of Subjects in 14 CFR Part 39

Air transportation, Aircraft, Aviation safety, Safety.

Adoption of the Amendment

Accordingly, pursuant to the authority delegated to me by the Administrator, the Federal Aviation Administration amends part 39 of the Federal Aviation Regulations (14 CFR part 39) as follows:

PART 39—AIRWORTHINESS DIRECTIVES

1. The authority citation for part 39 continues to read as follows:

Authority: 49 U.S.C. 106(g), 40113, 44701.

§ 39.13 [Amended]

2. Section 39.13 is amended by adding the following new airworthiness directive:

2001–19–05 Rolls-Royce plc. Amendment 39–12445. Docket 2001–NE–22–AD.

Applicability

This airworthiness directive (AD) is applicable to Rolls-Royce plc. (RR) models RB211–535C–37, RB211–535E4–37, RB211–535E4–B–37, and RB211–535E4–B–75 turbofan engines, with radial drive steady bearings, part number (P/N) LK76084, installed on, but not limited to Boeing 757 and Tupolev Tu204 airplanes.

Note 1: This AD applies to each engine identified in the preceding applicability provision, regardless of whether it has been modified, altered, or repaired in the area subject to the requirements of this AD. For engines that have been modified, altered, or repaired so that the performance of the requirements of this AD is affected, the owner/operator must request approval for an alternative method of compliance in accordance with paragraph (d) of this AD. The request should include an assessment of the effect of the modification, alteration, or repair on the unsafe condition addressed by this AD; and, if the unsafe condition has not been eliminated, the request should include specific proposed actions to address it.

Compliance

Compliance with this AD is required as indicated, unless already done.

To reduce the risk of engine in-flight shutdown due to low life failure of radial drive steady bearings, do the following:

(a) If one or more engines in an airplane have a part number radial drive steady bearing installed other than P/N LK76084, no further action is required.

(b) If all engines in an airplane have a radial drive steady bearing P/N LK76084 installed, replace bearings within 100 flight hours after the effective date of this AD, as specified in Table 1 as follows:

TABLE 1.—RADIAL DRIVE STEADY BEARING REPLACEMENT CONDITIONS

If	Then
(1) Both engines have a radial drive steady bearing P/N LK76084 with fewer than 600 hours-since-new (HSN).	Replace the lowest life bearing with a bearing P/N FB222165 or, a bearing P/N LK76084 that has greater than 1,500 HSN.

TABLE 1.—RADIAL DRIVE STEADY BEARING REPLACEMENT CONDITIONS—Continued

If	Then
(2) One engine has a radial drive steady bearing P/N LK76084 with fewer than 600 HSN, and the other engine has a bearing P/N LK76084 with more than 600 HSN but fewer than 1,500 HSN.	Replace the lowest life bearing with a bearing with a bearing P/N FB222165 or, a bearing P/N LK 76084 that has greater than 600 HSN.
(3) One engine has a radial drive steady bearing P/N FK76084 with fewer than 600 HSN, and the other engine has a bearing P/N FK76084 with more than 1,500 HSN.	No action required.
(4) Both engines have a radial drive steady bearing P/N FK76084 with 600 or more HSN.	No action required.

(c) Whenever an engine is newly installed in an airplane, repeat paragraphs (a) through (b) of this AD. For information on installing radial drive steady bearing P/N FB222165, see Rolls-Royce plc. Service Bulletin RB.211–72–C925, Revision 2, dated March 23, 2001.

Alternative Methods of Compliance

(d) An alternative method of compliance or adjustment of the compliance time that provides an acceptable level of safety may be used if approved by the Manager, Engine Certification Office (ECO). Operators must submit their requests through an appropriate FAA Principal Maintenance Inspector, who may add comments and then send it to the Manager, ECO.

Note 2: Information concerning the existence of approved alternative methods of compliance with this airworthiness directive, if any, may be obtained from the ECO.

Special Flight Permits

(e) Special flight permits may be issued in accordance with sections 21.197 and 21.199 of the Federal Aviation Regulations (14 CFR 21.197 and 21.199) to operate the aircraft to a location where the requirements of this AD can be accomplished.

Note 3: The subject of this AD is addressed in Civil Airworthiness Authority airworthiness directive AD 004–09–2000, dated September 19, 2000.

Effective Date of this AD

(f) This amendment becomes effective on October 11, 2001.

Issued in Burlington, Massachusetts, on September 18, 2001.

Jay J. Pardee,

Manager, Engine and Propeller Directorate, Aircraft Certification Service.

[FR Doc. 01–24023 Filed 9–25–01; 8:45 am]

BILLING CODE 4910–13–P

DEPARTMENT OF TRANSPORTATION

Federal Aviation Administration

14 CFR Part 95

[Docket No. 30271; Amdt. No. 431]

IFR Altitudes; Miscellaneous Amendments

AGENCY: Federal Aviation Administration (FAA), DOT.

ACTION: Final rule.

SUMMARY: The amendment adopts miscellaneous amendments to the required IFR (instrument flight rules) altitudes and changeover points for certain Federal airways, jet routes, or direct routes for which a minimum or maximum en route authorized IFR altitude is prescribed. This regulatory action is needed because of changes occurring in the National Airspace System. These changes are designed to provide for the safe and efficient use of the navigable airspace under instrument conditions in the affected areas.

EFFECTIVE DATE: 0901 UTC, November 1, 2001.

FOR FURTHER INFORMATION CONTACT: Donald P. Pate, Flight Procedure Standards Branch (AMCAFS–420), Flight Technologies and Programs Division, Flight Standards Service, Federal Aviation Administration, Mike Monorey Aeronautical Center, 6500 South MacArthur Blvd. Oklahoma City, OK 73169 (Mail Address: P.O. Box 25082 Oklahoma City, OK 73125) telephone: (405) 954–4164.

SUPPLEMENTARY INFORMATION: This amendment to part 95 of the Federal Aviation Regulations (14 CFR part 95) amends, suspends, or revokes IFR altitudes governing the operation of all aircraft in flight over a specified route or any portion of that route, as well as the changeover points (COPs) for Federal airways, jet routes, or direct routes as prescribed in part 95.

The Rule

The specified IFR altitudes, when used in conjunction with the prescribed changeover points for those routes, ensure navigation aid coverage that is adequate for safe flight operations and free of frequency interference. The reasons and circumstances that create the need for this amendment involve matters of flight safety and operational efficiency in the National Airspace System, are related to published aeronautical charts that are essential to the user, and provide for the safe and efficient use of the navigable airspace. In addition, those various reasons or circumstances require making this amendment effective before the next scheduled charting and publication date of the flight information to assure its timely availability to the user. The effective date of this amendment reflects those considerations. In view of the close and immediate relationship between these regulatory changes and safety in air commerce, I find that notice and public procedure before adopting this amendment are impracticable and contrary to the public interest and that good cause exists for making the amendment effective in less than 30 days.

Conclusion

The FAA has determined that this regulation only involves an established body of technical regulations for which frequent and routine amendments are necessary to keep them operationally current. It, therefore—(1) is not a ''significant regulatory action'' under Executive Order 12866; (2) is not a ''significant rule'' under DOT Regulatory Policies and Procedures (44 FR 11034; February 26, 1979); and (3) does not warrant preparation of a regulatory evaluation as the anticipated impact is so minimal. For the same reason, the FAA certifies that this amendment will not have a significant economic impact on a substantial number of small entities under the criteria of the Regulatory Flexibility Act.

List of Subjects in 14 CFR Part 95

Airspace, Navigation (air).

Issued in Washington, DC, on September 21, 2001.

Nicholas A. Sabatini,

Director, Flight Standards Service.

Adoption of The Amendment

Accordingly, pursuant to the authority delegated to me by the Administrator, part 95 of the Federal Aviation Regulations (14 CFR part 95) is amended as follows effective at 0901 UTC,

1. The authority citation for part 95 continues to read as follows:

Authority: 49 U.S.C. 106(g), 40103, 40106, 40113, 40114, 40120, 44502, 44514, 44719, 44721.

2. Part 95 amended to read as follows:

REVISIONS TO IFR ALTITUDES AND CHANGEOVER POINTS

[Amendment 431, Effective Date: November 1, 2001]

From	To	MEA
§ 95.6001 VICTOR ROUTES–U.S.		
§ 95.6010 VOR Federal Airway 10 Is Amended To Read in Part		
Youngstown, OH VORTAC	Volan, PA FIX	3000
Volan, PA FIX	Talls, PA FIX	*4000
*3100–MOCA		
Talls, PA FIX	Revloc, PA VOR/DME	4000

REVISIONS TO IFR ALTITUDES AND CHANGEOVER POINTS—Continued

[Amendment 431, Effective Date: November 1, 2001]

From	To	MEA
§ 95.6015 VOR Federal Airway 15 Is Amended To Read in Part		
Hobby, TX VOR/DME	Navasota, TX VORTAC	2100
§ 95.6020 VOR Federal Airway 20 Is Amended To Read in Part		
Palacios, TX VORTAC	Keeds, TX INT	1700
Keeds, TX INT	Hobby, TX VOR/DME	2500
Hobby, TX VOR/DME	Beaumont, TX VOR/DME	1800
§ 95.6035 VOR Federal Airway 35 Is Amended To Read in Part		
Ended, FL FIX *1500–MOCA	Cross City, FL VORTAC	*3000
§ 95.6066 VOR Federal Airway 66 Is Amended To Read in Part		
Pecos, TX VOR/DME	Midland, TX VORTAC	5000
§ 95.6093 VOR Federal Airway 93 Is Amended To Read in Part		
Vinny, PA FIX *2600–MOCA	Lancaster, PA VORTAC	*4500
§ 95.6157 VOR Federal Airway 157 Is Amended To Read in Part		
Ocala, FL VORTAC	Taylor, FL VORTAC	2000
§ 95.6161 VOR Federal Airway 161 Is Amended To Read in Part		
Llano, TX VORTAC *6000–MRA **2800–MOCA	*Built, TX FIX	**6000
§ 95.6194 VOR Federal Airway 194 Is Amended To Read in Part		
Hobby, TX VOR/DME	Stros, TX INT	2000
Stros, TX INT	Sabine Pass, TX VOR/DME	3000
§ 95.6198 VOR Federal Airway 198 Is Amended To Read in Part		
Eagle Lake, TX VOR/DME *1500–MOCA	Blums, TX INT	*2100
Blums, TX INT	Hobby, TX VOR/DME	2400
Hobby, TX VOR/DME	Stros, TX INT	2000
Stros, TX INT	Sabine Pass, TX VOR/DME	3000
§ 95.6210 VOR Federal Airway 210 Is Amended To Read in Part		
Volan, PA FIX *3100–MOCA	Talls, PA FIX	*4000
Talls, PA FIX	Revloc, PA VOR/DME	4000
§ 95.6297 VOR Federal Airway 297 Is Amended To Read in Part		
Talls, PA FIX *3100–MOCA	Volan, PA FIX	*4000
§ 95.6320 VOR Federal Airway 320 Is Amended To Read in Part		
Traverse City, MI VORTAC *3000–MOCA	Mt. Pleasant, MI VOR/DME	*5000
§ 95.6358 VOR Federal Airway 358 Is Amended To Read in Part		
Lampasas, TX VORTAC	Sonet, TX FIX	3000
Sonet, TX FIX	Waco, TX VORTAC	2700
§ 95.6437 VOR Federal Airway 437 Is Amended To Read in Part		
Ormond Beach, FL VORTAC	*Cokes, FL FIX	**2000

REVISIONS TO IFR ALTITUDES AND CHANGEOVER POINTS—Continued

[Amendment 431, Effective Date: November 1, 2001]

From	To	MEA
*3000–MRA **1400–MOCA		
§ 95.6441 VOR Federal Airway 441 Is Amended To Read in Part		
Baypo, FL FIX	*Nitts, FL FIX	**4000
*3000–MRA **1700–MOCA		
Nitts, FL FIX	Ocala, FL VORTAC	2000
Ocala, FL VORTAC	Gators, FL VORTAC	2000
Gators, FL VORTAC	Brunswick, GA VORTAC	*3000
*1800–MOCA		
§ 95.6457 VOR Federal Airway 457 Is Amended To Read in Part		
Lancaster, PA VORTAC	Vinny, PA FIX	*4500
**2600–MOCA		
§ 95.6537 VOR Federal Airway 537 Is Amended To Read in Part		
Ocala, FL VORTAC	Gators, FL VORTAC	2000
Gators, FL VORTAC	Alvin, FL FIX	*3000
*2000–MOCA		
Alvin, FL FIX	Greenville, FL VORTAC	2000
§ 95.6558 VOR Federal Airway 558 Is Amended To Read in Part		
Eagle Lake, TX VOR/DME	Blums, TX INT	*2100
*1500–MOCA		
Blums, TX INT	Hobby, TX VOR/DME	2400
§ 95.6579 VOR Federal Airway 579 Is Amended To Read in Part		
Baypo, FL FIX	*Nitts, FL FIX	**4000
*3000–MRA **1700–MOCA		
Nitts, FL FIX	Gators, FL VORTAC	*3000
*2000–MOCA		
Gators, FL VORTAC	Cross City, FL VORTAC	2000

From	To	MEA	MAA
§ 95.7001 JET ROUTES			
§ 95.7030 Jet Route No. 30 Is Amended To Read in Part			
Bucko, WV FIX	Kessel, WV VOR/DME	18000	#45000
§ 95.7034 Jet Route No. 34 Is Amended To Read in Part			
Bucko, WV FIX	Kessel, WV VOR/DME	18000	45000
§ 95.7055 Jet Route No. 55 Is Amended To Read in Part			
Dolphin, FL VORTAC	Llake, FL FIX	18000	45000
Llake, FL FIX	Inpin, FL FIX	23000	45000
Inpin, FL FIX	Craig, FL VORTAC	18000	45000
§ 95.7058 Jet Route No. 58 Is Amended To Read in Part			
Harvey, LA VORTAC	Sarasota, FL VORTAC	18000	
Sarasota, FL VORTAC	Lee County, FL VORTAC	18000	45000
§ 95.7084 Jet Route No. 84 Is Amended To Read in Part			
Sidney, NE VORTAC #MEA Is Established With a Gap in Navigational Coverage	Wolbach, NE VORTAC	18000	45000
§ 95.7085 Jet Route No. 85 Is Amended To Read in Part			
Dolphin, FL VORTAC	Llake, FL FIX	18000	45000

From	To	MEA	MAA
Llake, FL FIX	Inpin, FL FIX	23000	45000
Inpin, FL, FIX	Gators, FL VORTAC	18000	45000
§ 95.7086 Jet Route No. 86 Is Amended To Read in Part			
Humble, TX VORTAC	Sarasota, FL VORTAC	18000	45000
Sarasota, FL VORTAC	La Belle, FL VORTAC	23000	45000
§ 95.7100 Jet Route No. 100 Is Amended To Read in Part			
Sidney, NE VORTAC #MEA Is Established With a Gap in Navigational Coverage	Wolbach, NE VORTAC	#18000	45000

Airway segment		Changeover points	
From	To	Distance	From
§ 95.8003 VOR Federal Airway Changeover Points V–10 is Amended To Add Changeover Point			
Youngstown, OH VORTAC	Revloc, PA VOR/DME	37	Youngs-town.
V–210 Is Amended To Add Changeover Point			
Volan, PA FIX #COP Measured From Youngstown, OH VORTAC	Revloc, PA VOR/DME	#37	Volan.
V–297 Is Amended To Add Changeover Point			
Talls, PA FIX #COP Measured From Revloc, PA VOR/DME	Youngstown, OH VORTAC	#62	Talls.

[FR Doc. 01–24093 Filed 9–25–01; 8:45 am]
BILLING CODE 4910–13–M

DEPARTMENT OF TRANSPORTATION

Coast Guard

33 CFR Part 165

[COTP Jacksonville–01–095]

RIN 2115–AA97

Security Zones; Port of Jacksonville and Port Canaveral, FL

AGENCY: Coast Guard, DOT.

ACTION: Temporary final rule.

SUMMARY: The Coast Guard is establishing moving and fixed security zones 100 yards around all tank vessels, passenger vessels and military pre-positioned ships when these vessels enter, are moored in, or depart the Ports of Jacksonville or Canaveral. These security zones are needed for national security reasons to protect the public and ports from potential subversive acts. Entry into these zones is prohibited, unless specifically authorized by the Captain of the Port, Jacksonville, Florida or his designated representative.

DATES: This regulation becomes effective at 12 noon on September 12, 2001 and will terminate at 11:59 p.m. on October 3, 2001.

ADDRESSES: Comments and material received from the public, as well as documents indicated in this preamble as being available in the docket, are part of [COTP Jacksonville 01–095] and are available for inspection or copying at Marine Safety Office Jacksonville, 7820 Arlington Expressway, Suite 400, Jacksonville, FL 32211, between 7:30 p.m. and 4 p.m. Monday through Friday, except Federal holidays.

FOR FURTHER INFORMATION CONTACT: LT(jg) Brian G. Knapp, Coast Guard Marine Safety Office Jacksonville, at (904) 232–2957.

SUPPLEMENTARY INFORMATION:

Regulatory Information

We did not publish a notice of proposed rulemaking (NPRM) for this regulation. Under 5 U.S.C. 553(b)(B), the Coast Guard finds that good cause exists for not publishing a NPRM. Publishing an NPRM, which would incorporate a comment period before a final rule was issued, would be contrary to the public interest since immediate action is needed to protect the public, ports and waterways of the United States. For the same reasons, under 5 U.S.C. 553(d)(3), the Coast Guard finds that good cause exists for making this rule effective less than 30 days after publication in the **Federal Register.** The Coast Guard will issue a broadcast notice to mariners and place Coast Guard vessels in the vicinity of these zones to advise mariners of the restriction.

Background and Purpose

Based on the September 11, 2001, terrorist attacks on the World Trade Center buildings in New York and the Pentagon in Arlington, Virginia, there is an increased risk that subversive activity could be launched by vessels or persons in close proximity to the Ports of Jacksonville or Canaveral, Florida, against tank vessels, cruise ships and military pre-positioned vessels entering, departing and moored within these ports. These temporary security zones are activated when the subject vessels pass the St. Johns River Sea Buoy, at approximate position 30°23′35″ N, 81°19′08″ W, when entering the Port of Jacksonville, or pass either Port Canaveral Channel Entrance Buoys #3 or #4, at respective approximate positions 28°22.7′ N, 80°31.8′ W, and 28°23.7 N, 80°29.2 W, when entering Port Canaveral. The zone for a vessel is deactivated when the vessel passes these buoys on its departure from port.

Military pre-positioned ships are U.S. commercial ships on long-term charter to the Military Sealift Command. They are utilized to transport military

equipment and cargo. The Captain of the Port will notify the public via Marine Safety Radio Broadcast on VHF Marine Band Radio, Channel 22 (157.1 MHz) of all active security zones in port by identifying the names of the vessels around which they are centered. There will be Coast Guard and local police department patrol vessels on scene to monitor traffic through these areas. Entry into these security zones is prohibited, unless specifically authorized by the Captain of the Port, Jacksonville, Florida.

Regulatory Evaluation

This rule is not a significant regulatory action under section 3(f) of Executive Order 12866, Regulatory Planning and Review, and does not require an assessment of potential costs and benefits under section 6(a)(3) of that order. The Office of Management and Budget has not reviewed it under that order. It is not significant under the regulatory policies and procedures of the Department of Transportation (DOT) (44 FR 11040; February 26, 1979).

Small Entities

Under the Regulatory Flexibility Act (5 U.S.C. 601–612), the Coast Guard considered whether this rule would have a significant economic effect upon a substantial number of small entities. ''Small entities'' include small businesses, not-for-profit organizations that are independently owned and operated and are not dominant in their fields, and governmental jurisdictions with populations of less than 50,000.

The Coast Guard certifies under 5 U.S.C. 605(b) that this rule will not have a significant economic impact on a substantial number of small entities because small entities may be allowed to enter on a case by case basis with the authorization of the Captain of the Port.

Assistance for Small Entities

Under section 213(a) of the Small Business Regulatory Enforcement Fairness Act of 1996 (Public Law 104–121), we offer to assist small entities in understanding the rule so that they can better evaluate its effects on them and participate in the rulemaking process. If the rule will affect your small business, organization, or government jurisdiction and you have questions concerning its provisions or options for compliance, please contact the person listed under **FOR FURTHER INFORMATION CONTACT** for assistance in understanding this rule.

Small businesses may send comments on the actions of Federal employees who enforce, or otherwise determine compliance with, Federal regulations to the Small Business and Agriculture Regulatory Enforcement Ombudsman and the Regional Small each agency's responsiveness to small business. If you wish to comment on actions by employees of the Coast Guard, call 1–888–REG–FAIR (1–888–734–3247).

Collection of Information

This rule calls for no new collection of information requirements under the Paperwork Reduction Act (44 U.S.C. 3501–3520).

Federalism

A rule has implication for federalism under Executive Order 13132, Federalism, if it has a substantial direct effect on State or local governments and would either preempt State law or impose a substantial direct cost of compliance on them. We have analyzed this rule under that Order and have determined that it does not have implications for federalism.

Unfunded Mandates Reform Act

The Unfunded Mandates Reform Act of 1995 (2 U.S.C. 1531–1538) requires Federal agencies to assess the effects of their discretionary regulatory actions. In particular, the Act addresses actions that may result in the expenditure by a State, local, or tribal government, in the aggregate, or by the private sector of $100,000,000 or more in any one year. Though this rule will not result in such an expenditure, we do discuss the effects of this rule elsewhere in this preamble.

Taking of Private Property

This rule will not effect a taking of private property or otherwise have taking implications under Executive Order 12630, Governmental Actions and Interference with Constitutionally Protected Property Rights.

Civil Justice Reform

This rule meets applicable standards in sections 3(a) and 3(b)(2) of Executive Order 12988, Civil Justice Reform, to minimize litigation, eliminate ambiguity, and reduce burden.

Environmental

The Coast Guard considered the environmental impact of this rule and concluded under Figure 2–1, paragraph 34(g) of Commandant Instruction M16475.1D, this rule is categorically excluded from further environmental documentation.

Protection of Children

We have analyzed this rule under Executive Order 13045, Protection of Children from Environmental Health Risks and Safety Risks. This rule is not an economically significant rule and does not concern an environmental risk to health or risk to safety that may disproportionately affect children.

Indian Tribal Governments

This rule does not have tribal implications under Executive Order 13175, Consultation and Coordination with Indian Tribal Governments, because it does not have a substantial direct effect on one or more Indian tribes, on the relationships between the Federal Government and Indian tribes, or on the distribution of power and responsibilities between the Federal Government and Indian tribes.

Energy Effects

We have analyzed this rule under Executive Order 13211, Actions Concerning Regulations That Significantly Affect Energy Supply, Distribution, or use. We have determined that it is not a ''significant energy action'' under Executive Order 12866 and is not likely to have a significant adverse effect on the supply, distribution, or use of energy. It has not been designated by the Administrator of the Office of Information and Regulatory Affairs as a significant energy action. Therefore, it does not require a Statement of Energy Effects under Executive Order 13211.

List of Subjects in 33 CFR Part 165

Harbors, Marine safety, Navigation (water), Reports and recordkeeping requirements, Security measures, Waterways.

For the reasons discussed in the preamble, the Coast Guard amends 33 CFR part 165, as follows:

PART 165—[AMENDED]

1. The authority citation for part 165 continues to read as follows:

Authority: 33 U.S.C. 1231; 50 U.S.C. 191, 33 CFR 1.05–1(g), 6.04–1, 6.04–6, 160.5; 49 CFR 1.46.

2. Add a new temporary § 165.T–07–095 to read as follows:

§ 165.T–07–095 Security Zone; Ports of Jacksonville and Canaveral, Florida.

(a) *Regulated area.* Temporary moving security zones are established 100 yards around all tank vessels, passenger vessels and military pre-positioned ships during transits entering or departing the ports of Jacksonville and Canaveral, Florida. These moving security zones are activated when the subject vessels pass the St. Johns River Sea Buoy, at approximate position 30°23′35″ N, 81°19′08″ W, when entering the Port of Jacksonville, or pass

either Port Canaveral Channel Entrance Buoys #3 or #4, at respective approximate positions 28°22.7′ N, 80°31.8′ W, and 28°23.7 N, 80°29.2 W, when entering Port Canaveral. Temporary fixed security zones are established 100 yards around all tank vessels, passenger vessels and military pre-positioned ships docked in the Ports of Jacksonville and Canaveral, Florida.

(b) *Regulations.* In accordance with the general regulations in § 165.33 of this part, entry into these zones is prohibited except as authorized by the Captain of the Port, or a Coast Guard commissioned, warrant, or petty officer designated by him. The Captain of the Port will notify the public via Marine Safety Radio Broadcast on VHF Marine Band Radio, Channel 22 (157.1 MHz) of all active security zones in port by identifying the names of the vessels around which they are centered.

(c) *Dates.* This section becomes effective at 12 noon on September 12, 2001, and will terminate at 11:59 p.m. on October 3, 2001.

Dated: September 12, 2001.

M.M. Rosecrans,

Captain, U.S. Coast Guard, Captain of the Port Jacksonville.

[FR Doc. 01–24111 Filed 9–25–01; 8:45 am]

BILLING CODE 4910–15–U

DEPARTMENT OF TRANSPORTATION

Coast Guard

33 CFR Part 165

[CGD01–01–163]

RIN 2115–AA97

Safety and Security Zones; Coast Guard Force Protection Station Portsmouth Harbor, Portsmouth, New Hampshire; Coast Guard Base Portland, South Portland, Maine; and Station Boothbay Harbor, Boothbay Harbor Maine

AGENCY: Coast Guard, DOT.

ACTION: Temporary final rule.

SUMMARY: The Coast Guard is establishing three safety and security zones to close the waters near the federal properties of the following Coast Guard facilities: Portsmouth, New Hampshire; Station Portland, Maine; and Station Boothbay, Maine. These security and safety zones are needed to safeguard Coast Guard facilities, vessels and personnel from potential sabotage or other subversive acts, accidents or other causes of a similar nature. Entry or movement within these zones by any vessel of any description whatsoever, without the express authority of the Captain of the Port, Portland, or his authorized patrol representative, is strictly prohibited.

DATES: This section is effective from 6 p.m. September 14, 2001 through 6 p.m. March 12, 2002.

Portland, Maine between 8 a.m. and 4 p.m., Monday through Friday, except Federal Holidays.

FOR FURTHER INFORMATION CONTACT: Lieutenant (Junior Grade) W. W. Gough, Chief, Ports and Waterways Safety Branch, Captain of the Port, Portland, Maine at (207) 780–3251.

SUPPLEMENTARY INFORMATION:

Regulatory History

Pursuant to 5 U.S.C. 553, a notice of proposed rulemaking (NPRM) was not published for this regulation. Good cause exists for not publishing a NPRM and for making this regulation effective in less than 30 days after publication in the **Federal Register**. Due to the catastrophic nature and extent of damage realized from the aircraft crashes into the World Trade Center towers, this rulemaking is urgently necessary to protect the national security interests of the United States against future potential terrorist strikes against governmental targets. A similar attack was conducted on the Pentagon on the same day. Any delay in the establishment and enforcement of this regulation's effective date would be unnecessary and contrary to public interest and national security since immediate action is needed to protect the Group Portland Base, South Portland Maine, Coast Guard Station Portsmouth Harbor, Portsmouth, New Hampshire, and Coast Guard Station Boothbay Harbor, Boothbay Harbor, Maine, facilities, vessels and personnel, as well as the public and maritime community, from potential terrorist attacks. The public will be kept appraised of the safety and security zones and respective changes via Broadcast Notice to Mariners.

Background and Purpose

On September 11, 2001, both towers of the World Trade Center, New York City, New York, were destroyed as a result of two commercial airliner crashes, an act that can only be explained as resulting from terrorist attacks. This regulation establishes three safety and security zones: (1) All waters of Portland Harbor, Maine in a 100-yard radius from the point at 43°38.742′ N, 70°14.865′ W; (2) All waters of Portsmouth Harbor, New Hampshire in a 50-yard radius from the point at 43°04.292′ N, 70°42.632′ W; and (3) All waters of Boothbay Harbor, Maine in a 50-yard radius from the point at 43°50.606′ N, 69°38.571′ W.

The safety and security zones have identical boundaries, and restrict entry into or movement within the waters of Portland Harbor, Portsmouth Harbor, and Boothbay Harbor. The safety and security zones are necessary to protect Coast Guard personnel, facilities, the public and the surrounding area from sabotage or other subversive acts, accidents, or events of a similar nature. All persons other than those approved by the Captain of the Port or his authorized patrol representative are prohibited from entering into or moving within the zones without the prior approval of the Captain of the Port. In addition to this publication in the **Federal Register,** the public will be made aware of the existence of these safety and security zones, their exact locations within these boundaries, and the restrictions involved, via Broadcast Notice to Mariners.

Regulatory Evaluation

This temporary final rule is not a significant regulatory action under section 3(f) of Executive Order 12866 and does not require an assessment of potential costs and benefits under section 6(a)(3) of that order. The Office of Management and Budget has not reviewed it under that Order. It is not significant under the regulatory policies and procedures of the Department of Transportation (DOT) (44 FR 11040; February 26, 1979). The Coast Guard expects the economic impact of this proposal to be so minimal that a full Regulatory Evaluation under paragraph 10e of the regulatory policies and procedures of DOT is unnecessary for the following reasons: these safety and security zones encompass only a portion of Portsmouth, Portland, and Boothbay Harbors, allowing vessels to safely navigate around the zones without delay and maritime advisories will be made to advise the maritime community of these safety and security zones.

Small Entities

Under the Regulatory Flexibility Act (5 U.S.C. 601 *et seq.*), the Coast Guard must consider whether this proposal will have a significant economic impact on a substantial number of small entities. ''Small entities'' may include (1) small businesses and not-for-profit organizations that are independently owned and operated and are not dominant in their fields and (2) governmental jurisdictions with populations of less than 50,000.

For the reasons addressed under the Regulatory Evaluation above, the Coast

Guard expects the impact of this regulation to be minimal and certifies under 5 U.S.C. 605(b) that this final rule will not have a significant economic impact on a substantial number of small entities.

Collection of Information

This rule contains no collection of information requirements under the Paperwork Reduction Act of 1995 (44 U.S.C. 3501 *et seq.*).

Federalism

The Coast Guard has analyzed this rule under the principles and criteria contained in Executive Order 13132 and have determined that this rule does not have sufficient federalism implications for Federalism under that order.

Unfunded Mandates Reform Act

The Unfunded Mandates Reform Act of 1995 (2 U.S.C. 1531–1538) governs the issuance of Federal regulations that require unfunded mandates. An Unfunded Mandate is a regulation that requires a state, local or tribal government or the private sector to incur costs without the Federal government's having first provided the funds to pay those costs. This rule will not impose an Unfunded Mandate.

Taking of Private Property

This rule will not affect a taking of private property or otherwise have taking implications under Executive Order 12630, Governmental Actions and Interference with Constitutionally Protected Property Rights.

Civil Justice Reform

This rule meets applicable standards in section 3(a) and 3(b)(2) of Executive Order 12988, Civil Justice Reform, to minimize litigation, eliminate ambiguity and reduce burden.

Protection of Children

The Coast Guard has analyzed this rule under Executive Order 13045, Protection of Children from Environmental Health Risks and Safety Risks. This rule is not an economically significant rule and does not concern an environmental risk to health or risk to safety that may disproportionately affect children.

Indian Tribal Governments

This rule does not have tribal implications under Executive Order 13175, Consultation and Coordination with Indian Tribal Governments. A rule with tribal implications has a substantial direct effect on one or more Indian tribes, on the relationship between the Federal Government and Indian tribes, or on the distribution of power and responsibilities between the Federal Government and Indian tribes.

Environment

The Coast Guard has considered the environmental impact of this regulation and concluded that, under Figure 2–1, paragraph 34(g) of Commandant Instruction M16475.1D, this rule is categorically excluded from further environmental documentation.

Energy Effects

The Coast Guard has analyzed this rule under Executive Order 13211, Actions Concerning Regulations That Significantly Affect Energy Supply, Distribution, or Use. We have determined that it is not a ''significant energy action'' under that order because it is not a ''significant regulatory action'' under Executive Order 12866 and is not likely to have a significant adverse effect on the supply, distribution, or use of energy. It has not been designated by the Administrator of the Office of Information and Regulatory Affairs as a significant energy action. Therefore, it does not require a Statement of Energy Effects under Executive Order 13211.

List of Subjects in 33 CFR Part 165

Harbors, Marine safety, Navigation (water), Reporting and recordkeeping requirements, Security measures, Waterways.

Regulation

For the reasons set out in the preamble, the Coast Guard amends 33 CFR part 165 as follows:

1. The authority citation for part 165 continues to read as follows:

Authority: 33 U.S.C. 1231; 50 U.S.C. 191, 33 CFR 1.05–1(g), 6.04–1, 6.04–6, 160.5; 49 CFR 1.46.

2. Add temporary § 165.T01–163 to read as follows:

§ 165.T01–163 Safety and Security Zones; Coast Guard Force Protection for Coast Guard Group Portland, South Portland, Maine, Station Portsmouth Harbor, New Hampshire, and Station Boothbay Harbor, Maine.

(a) *Location.* The following are safety and security zones: (1) All waters of Portland Harbor, Maine in a 100-yard radius from the point at 43°38.742′ N, 70°14.865′ W; (2) All waters of Portsmouth Harbor, New Hampshire in a 50-yard radius from the point at 43°04.292′ N, 70°42.632′ W; and (3) All waters of Boothbay Harbor, Maine in a 50-yard radius from the point at 43°50.606′ N, 69°38.571′ W.

(b) *Effective dates.* This section is effective from 6 p.m. September 14, 2001, through 6 p.m. March 12, 2002.

(c) *Regulations.* (1) In accordance with the general regulations in §§ 165.23 and 165.33 of this part, entry into or movement within this zone is prohibited unless previously authorized by the Captain of the Port (COTP) Portland.

(2) All persons and vessels shall comply with the instructions of the COTP or the designated on-scene U.S. Coast Guard patrol personnel. On-scene Coast Guard patrol personnel include commissioned, warrant, and petty officers of the Coast Guard on board.

(3) No person may swim upon or below the surface of the water within the boundaries of the safety and security zones unless previously authorized by the Captain of the Port, Portland or his authorized patrol representative.

Dated: September 14, 2001.

M.P. O'Malley,

Commander, U.S. Coast Guard, Captain of the Port.

[FR Doc. 01–24110 Filed 9–25–01; 8:45 am]

BILLING CODE 4910–15–P

ENVIRONMENTAL PROTECTION AGENCY

40 CFR Part 52

[PA–4116a; FRL–7060–5]

Approval and Promulgation of Air Quality Implementation Plans; Pennsylvania; VOC and NO_X RACT Determinations for Eighteen Individual Sources Located in the Philadelphia-Wilmington-Trenton Area; Withdrawal of Direct Final Rule

AGENCY: Environmental Protection Agency (EPA).

ACTION: Withdrawal of direct final rule.

SUMMARY: Due to receipt of a letter of adverse comment, EPA is withdrawing the direct final rule approving revisions which establish reasonably available control technology (RACT) requirements for 18 major sources of volatile organic compounds (VOC) and nitrogen oxides (NO_X) located in the Philadelphia-Wilmington-Trenton ozone nonattainment area. In the direct final rule published on August 20, 2001 (66 FR 43502), we stated that if we received adverse comment by September 19, 2001, the rule would be withdrawn and not take effect. EPA subsequently received adverse comments from the Citizens for Pennsylvania's Future (PennFuture). EPA will address the comments received in a subsequent

final action based upon the proposed action also published on August 20, 2001 (66 FR 43551). EPA will not institute a second comment period on this action.

DATES: The direct final rule is withdrawn as of September 26, 2001.

FOR FURTHER INFORMATION CONTACT: Harold A. Frankford at (215) 814–2108.

List of Subjects in 40 CFR Part 52

Environmental protection, Air pollution control, Hydrocarbons, Incorporation by reference, Nitrogen dioxide, Ozone, Reporting and recordkeeping requirements.

Dated: September 14, 2001.

James W. Newson,

Acting Regional Administrator, Region III.

PART 52—[AMENDED]

§ 52.2020 [Amended]

Accordingly, the addition of § 52.2020(c)(156) is withdrawn as of September 26, 2001.

[FR Doc. 01–23626 Filed 9–25–01; 8:45 am]

BILLING CODE 6560–50–P

ENVIRONMENTAL PROTECTION AGENCY

40 CFR Part 52

[PA–4128a; FRL–7060–6]

Approval and Promulgation of Air Quality Implementation Plans; Pennsylvania; VOC RACT Determinations for Five Individual Sources Located in the Pittsburgh-Beaver Valley Area; Withdrawal of Direct Final Rule

AGENCY: Environmental Protection Agency (EPA).

ACTION: Withdrawal of direct final rule.

SUMMARY: Due to receipt of a letter of adverse comment, EPA is withdrawing the direct final rule to approve revisions which establish reasonably available control technology (RACT) requirements for five major sources of volatile organic compounds (VOC) located in the Pittsburgh-Beaver Valley ozone nonattainment area. In the direct final rule published on August 20, 2001 (66 FR 43497), EPA stated that if it received adverse comment by September 19, 2001, the rule would be withdrawn and not take effect. EPA subsequently received adverse comments from the Citizens for Pennsylvania's Future (PennFuture). EPA will address the comments received in a subsequent final action based upon the proposed action also published on August 20, 2001. EPA will not institute a second comment period on this action.

EFFECTIVE DATE: The direct final rule is withdrawn as of September 26, 2001.

FOR FURTHER INFORMATION CONTACT: Harold A. Frankford at (215) 814–2108.

List of Subjects in 40 CFR Part 52

Environmental protection, Air pollution control, Hydrocarbons, Incorporation by reference, Ozone, Reporting and recordkeeping requirements.

Dated: September 14, 2001.

James W. Newson,

Acting Regional Administrator, Region III.

PART 52—[AMENDED]

§ 52.2020 [Amended]

Accordingly, the addition of § 52.2020(c)(165) is withdrawn as of September 26, 2001.

[FR Doc. 01–23627 Filed 9–25–01; 8:45 am]

BILLING CODE 6560–50–P

ENVIRONMENTAL PROTECTION AGENCY

40 CFR Part 52

[PA–147/177–4126a; FRL–7060–2]

Approval and Promulgation of Air Quality Implementation Plans; Pennsylvania; NO_X RACT Determinations for Four Individual Sources Located in the Pittsburgh-Beaver Valley Area; Withdrawal of Direct Final Rule

AGENCY: Environmental Protection Agency (EPA).

ACTION: Withdrawal of direct final rule.

SUMMARY: Due to receipt of a letter of adverse comment, EPA is withdrawing the direct final rule approving revisions which establish reasonably available control technology (RACT) requirements for four major sources of oxides of nitrogen (NO_X) located in the Pittsburgh-Beaver Valley ozone nonattainment area. In the direct final rule published on August 15, 2001 (66 FR 42756), EPA stated that if it received adverse comment by September 14, 2001, the rule would be withdrawn and not take effect. EPA subsequently received adverse comments from the Citizens for Pennsylvania's Future (PennFuture). EPA will address the comments received in a subsequent final action based upon the proposed action also published on August 15, 2001 (66 FR 42831). EPA will not institute a second comment period on this action.

DATES: The direct final rule is withdrawn as of September 26, 2001.

FOR FURTHER INFORMATION CONTACT: Harold A. Frankford at (215) 814–2108.

List of Subjects in 40 CFR Part 52

Environmental protection, Air pollution control, Incorporation by reference, Nitrogen dioxide, Ozone, Reporting and recordkeeping requirements.

Dated: September 14, 2001.

James W. Newson,

Acting Regional Administrator, Region III.

PART 52—[AMENDED]

§ 52.2020 [Amended]

Accordingly, the addition of § 52.2020(c)(163) is withdrawn as of September 26, 2001.

[FR Doc. 01–23629 Filed 9–25–01; 8:45 am]

BILLING CODE 6560–50–P

ENVIRONMENTAL PROTECTION AGENCY

40 CFR Part 52

[MD057/71/98/115–3082; FRL–7066–3]

Approval and Promulgation of Air Quality Implementation Plans; Maryland; Rate of Progress Plans and Contingency Measures for the Baltimore Ozone Nonattainment Area

AGENCY: Environmental Protection Agency (EPA).

ACTION: Final rule.

SUMMARY: EPA is approving State Implementation Plan (SIP) revisions submitted by the State of Maryland. These revisions establish the three percent per year emission reduction rate-of-progress (ROP) requirement for the period from 1996 through 2005 for the Baltimore severe ozone nonattainment area. EPA is also approving contingency measures for failure to meet ROP for the Baltimore nonattainment area. EPA is approving these revisions in accordance with the requirements of the Clean Air Act.

EFFECTIVE DATE: This final rule is effective on October 26, 2001.

ADDRESSES: Copies of the documents relevant to this action are available for public inspection during normal business hours at the Air Protection Division, U.S. Environmental Protection Agency, Region III, 1650 Arch Street, Philadelphia, Pennsylvania 19103; and Maryland Department of the Environment, 2500 Broening Highway, Baltimore, Maryland, 21224.

FOR FURTHER INFORMATION CONTACT: Kristeen Gaffney, (215) 814–2092. Or by e-mail at *gaffney.kristeen@epa.gov.*

SUPPLEMENTARY INFORMATION:

I. Background

On August 6, 2001 (66 FR 40947), EPA published a notice of proposed rulemaking (NPR) for the State of Maryland. The NPR proposed approval of the post 1996 ROP plans for milestone years 1999, 2002 and 2005 for the Baltimore ozone nonattainment area submitted by the State of Maryland on December 24, 1997, as revised on April 24 and August 18, 1998, December 21, 1999 and December 28, 2000. The NPR also proposed approval of the contingency plan for failure to meet ROP for the Baltimore nonattainment area. Other specific requirements of Maryland's SIP revisions for the ROP plans and contingency plans for Baltimore and the rationale for EPA's proposed action are explained in the NPR and will not be restated here. No public comments were received on the NPR.

II. Final Actions

Final Action: EPA is approving the post 1996 ROP plans for milestone years 1999, 2002 and 2005 for the Baltimore ozone nonattainment area submitted on December 24, 1997, as revised on April 24 and August 18, 1998, December 21, 1999 and December 28, 2000.

Final Action: EPA is approving the contingency plans for failure to meet ROP for the Baltimore ozone nonattainment area submitted on December 24, 1997, as revised on April 24 and August 18, 1998, December 21, 1999 and December 28, 2000.

III. Administrative Requirements

A. General Requirements

Under Executive Order 12866 (58 FR 51735, October 4, 1993), this action is not a ''significant regulatory action'' and therefore is not subject to review by the Office of Management and Budget. For this reason, this action is also not subject to Executive Order 13211, ''Actions Concerning Regulations That Significantly Affect Energy Supply, Distribution, or Use'' (66 FR 28355 (May 22, 2001)). This action merely approves state law as meeting Federal requirements and imposes no additional requirements beyond those imposed by state law. Accordingly, the Administrator certifies that this rule will not have a significant economic impact on a substantial number of small entities under the Regulatory Flexibility Act (5 U.S.C. 601 *et seq.*). Because this rule approves pre-existing requirements under state law and does not impose any additional enforceable duty beyond that required by state law, it does not contain any unfunded mandate or significantly or uniquely affect small governments, as described in the Unfunded Mandates Reform Act of 1995 (Public Law 104–4). This rule also does not have tribal implications because it will not have a substantial direct effect on one or more Indian tribes, on the relationship between the Federal Government and Indian tribes, or on the distribution of power and responsibilities between the Federal Government and Indian tribes, as specified by Executive Order 13175 (65 FR 67249, November 9, 2000). This action also does not have Federalism implications because it does not have substantial direct effects on the States, on the relationship between the national government and the States, or on the distribution of power and responsibilities among the various levels of government, as specified in Executive Order 13132 (64 FR 43255, August 10, 1999). This action merely approves a state rule implementing a Federal standard, and does not alter the relationship or the distribution of power and responsibilities established in the Clean Air Act. This rule also is not subject to Executive Order 13045 ''Protection of Children from Environmental Health Risks and Safety Risks'' (62 FR 19885, April 23, 1997), because it is not economically significant.

In reviewing SIP submissions, EPA's role is to approve state choices, provided that they meet the criteria of the Clean Air Act. In this context, in the absence of a prior existing requirement for the State to use voluntary consensus standards (VCS), EPA has no authority to disapprove a SIP submission for failure to use VCS. It would thus be inconsistent with applicable law for EPA, when it reviews a SIP submission, to use VCS in place of a SIP submission that otherwise satisfies the provisions of the Clean Air Act. Thus, the requirements of section 12(d) of the National Technology Transfer and Advancement Act of 1995 (15 U.S.C. 272 note) do not apply. This rule does not impose an information collection burden under the provisions of the Paperwork Reduction Act of 1995 (44 U.S.C. 3501 *et seq.*).

B. Submission to Congress and the Comptroller General

The Congressional Review Act, 5 U.S.C. 801 *et seq.*, as added by the Small Business Regulatory Enforcement Fairness Act of 1996, generally provides that before a rule may take effect, the agency promulgating the rule must submit a rule report, which includes a copy of the rule, to each House of the Congress and to the Comptroller General of the United States. EPA will submit a report containing this rule and other required information to the U.S. Senate, the U.S. House of Representatives, and the Comptroller General of the United States prior to publication of the rule in the **Federal Register**. This rule is not a ''major rule'' as defined by 5 U.S.C. 804(2).

C. Petitions for Judicial Review

Under section 307(b)(1) of the Clean Air Act, petitions for judicial review of this action to approve the post 1996 ROP plans and contingency plans for the Baltimore ozone nonattainment area must be filed in the United States Court of Appeals for the appropriate circuit by November 26, 2001. Filing a petition for reconsideration by the Administrator of this final rule does not affect the finality of this rule for the purposes of judicial review nor does it extend the time within which a petition for judicial review may be filed, and shall not postpone the effectiveness of such rule or action. This action may not be challenged later in proceedings to enforce its requirements. (See section 307(b)(2).)

List of Subjects in 40 CFR Part 52

Environmental protection, Air pollution control, Nitrogen dioxide, Ozone.

Dated: September 18, 2001.

Donald S. Welsh,

Regional Administrator, Region III.

40 CFR part 52 is amended as follows:

PART 52—[AMENDED]

1. The authority citation for part 52 continues to read as follows:

Authority: 42 U.S.C. 7401 *et seq.*

Subpart V—Maryland

2. Section 52.1076 is amended by adding and reserving paragraphs (h) and (i) and adding paragraph (j) to read as follows:

§ 52.1076 Control strategy and rate-of-progress plan: ozone.

* * * * *

(j)(1) EPA approves revisions to the Maryland State Implementation Plan for post 1996 rate of progress plans for milestone years 1999, 2002 and 2005 for the Baltimore severe ozone nonattainment area. These revisions were submitted by the Secretary of the Maryland Department of the Environment on December 24, 1997, as

revised on April 24 and August 18, 1998, December 21, 1999 and December 28, 2000.

(2) EPA approves the contingency plans for failure to meet rate of progress in the Baltimore severe ozone nonattainment area for milestone years 1999, 2002 and 2005. These plans were submitted by the Secretary of the Maryland Department of the Environment on December 24, 1997, as revised on April 24 and August 18, 1998, December 21, 1999 and December 28, 2000.

[FR Doc. 01–24067 Filed 9–25–01; 8:45 am]

BILLING CODE 6560–50–P

ENVIRONMENTAL PROTECTION AGENCY

40 CFR Part 180

[OPP–301176; FRL–6803–7]

RIN 2070–AB78

Zoxamide 3,5-dichloro-N-(3-chloro-1-ethyl-1-methyl-2-oxopropyl)-4-methylbenzamide; Pesticide Tolerance

AGENCY: Environmental Protection Agency (EPA).

ACTION: Final rule.

SUMMARY: This regulation establishes a tolerance for combined residues of zoxamide and its metabolites 3,5-dichloro-1,4-benzenedicarboxylic acid (RH-1455 and RH-141455) and 3,5-dichloro-4-hydroxymethylbenzoic acid (RH-1452 and RH-141452 in or on tomato and cucurbit vegetables group. Rohm and Haas Company requested this tolerance under the Federal Food, Drug, and Cosmetic Act, as amended by the Food Quality Protection Act of 1996.

DATES: This regulation is effective September 26, 2001. Objections and requests for hearings, identified by docket control number OPP–301176, must be received by EPA on or before November 26, 2001.

ADDRESSES: Written objections and hearing requests may be submitted by mail, in person, or by courier. Please follow the detailed instructions for each method as provided in Unit VI.. of the **SUPPLEMENTARY INFORMATION**. To ensure proper receipt by EPA, your objections and hearing requests must identify docket control number OPP–301176 in the subject line on the first page of your response.

FOR FURTHER INFORMATION CONTACT: By mail: Cynthia Giles-Parker, Registration Division (7505C), Office of Pesticide Programs, Environmental Protection Agency, 1200 Pennsylvania Ave., NW.,Washington, DC 20460; telephone number: (703) 305-7740; and e-mail address: giles-parker.cynthia@epa.gov.

SUPPLEMENTARY INFORMATION:

I. General Information

A. Does this Action Apply to Me?

You may be affected by this action if you are an agricultural producer, food manufacturer, or pesticide manufacturer. Potentially affected categories and entities may include, but are not limited to:

Categories	NAICS	Examples of Potentially Affected Entities
Industry	111 112 311 32532	Crop production Animal production Food manufacturing Pesticide manufacturing

This listing is not intended to be exhaustive, but rather provides a guide for readers regarding entities likely to be affected by this action. Other types of entities not listed in the table could also be affected. The North American Industrial Classification System (NAICS) codes have been provided to assist you and others in determining whether or not this action might apply to certain entities. If you have questions regarding the applicability of this action to a particular entity, consult the person listed under **FOR FURTHER INFORMATION CONTACT**.

B. How Can I Get Additional Information, Including Copies of this Document and Other Related Documents?

1. *Electronically.*You may obtain electronic copies of this document, and certain other related documents that might be available electronically, from the EPA Internet Home Page at http://www.epa.gov/. To access this document, on the Home Page select ''Laws and Regulations,'' ''Regulations and Proposed Rules,'' and then look up the entry for this document under the ''**Federal Register**—Environmental Documents.'' You can also go directly to the**Federal Register** listings at http://www.epa.gov/fedrgstr/. To access the OPPTS Harmonized Guidelines referenced in this document, go directly to the guidelines at http://www.epa.gov/opptsfrs/home/guidelin.htm.

2. *In person.* The Agency has established an official record for this action under docket control number OPP–301176. The official record consists of the documents specifically referenced in this action, and other information related to this action, including any information claimed as Confidential Business Information (CBI). This official record includes the documents that are physically located in the docket, as well as the documents that are referenced in those documents. The public version of the official record does not include any information claimed as CBI. The public version of the official record, which includes printed, paper versions of any electronic comments submitted during an applicable comment period is available for inspection in the Public Information and Records Integrity Branch (PIRIB), Rm. 119, Crystal Mall #2, 1921 Jefferson Davis Hwy., Arlington, VA, from 8:30 a.m. to 4 p.m., Monday through Friday, excluding legal holidays. The PIRIB telephone number is (703) 305–5805.

II. Background and Statutory Findings

In the **Federal Register** of August 24, 2000, 65 FR 51612 (FRL–6739–1), EPA issued a notice pursuant to section 408 of the Federal Food, Drug, and Cosmetic Act (FFDCA), 21 U.S.C. 346a as amended by the Food Quality Protection Act of 1996 (FQPA) (Public Law 104–-170) announcing the filing of a pesticide petition (PP 9F5058) for tolerance by Rohm and Haas Company, 100 Independence Mall West, Philadelphia, PA 19108-2399. This notice included a summary of the petition prepared by Rohm and Haas, the registrant. There were no comments received in response to the notice of filing. A correction to the notice of filing was published in the **Federal Register** on December 15, 2000, 65 FR 78490 (FRL–6756–3).

The petition requested that 40 CFR part 180 be amended by establishing a tolerance for combined residues of the fungicide zoxamide 3,5-dichloro-N-(3-chloro-1-ethyl-1-methyl-2-oxopropyl)-4-methylbenzamide, and its metabolites, in or on tomatoes and cucurbit vegetables group at 2.0 part per million (ppm).

Section 408(b)(2)(A)(i) of the FFDCA allows EPA to establish a tolerance (the legal limit for a pesticide chemical residue in or on a food) only if EPA determines that the tolerance is ''safe.'' Section 408(b)(2)(A)(ii) defines ''safe'' to mean that'' there is a reasonable certainty that no harm will result from aggregate exposure to the pesticide chemical residue, including all anticipated dietary exposures and all other exposures for which there is reliable information.'' This includes exposure through drinking water and in residential settings, but does not include occupational exposure. Section 408(b)(2)(C) requires EPA to give special consideration to exposure of infants and

children to the pesticide chemical residue in establishing a tolerance and to ''ensure that there is a reasonable certainty that no harm will result to infants and children from aggregate exposure to the pesticide chemical residue....''

EPA performs a number of analyses to determine the risks from aggregate exposure to pesticide residues. For further discussion of the regulatory requirements of section 408 and a complete description of the risk assessment process, see the final rule on Bifenthrin Pesticide Tolerances (62 FR 62961, November 26, 1997) (FRL–5754–7).

III. Aggregate Risk Assessment and Determination of Safety

Consistent with section 408(b)(2)(D), EPA has reviewed the available scientific data and other relevant information in support of this action. EPA has sufficient data to assess the hazards of and to make a determination on aggregate exposure, consistent with section 408(b)(2), for a tolerance for combined residues of zoxamide and its metabolites 2,4-dichloro-1,4-benzenedicarboxylic acid (RH-1455 and RH-141455) and 3,5-dichloro-4-hydroxymethylbenzoic acid (RH-1452 and RH-141452) on tomatoes at 2.0 ppm and cucurbit vegetables group at 1.0 ppm. EPA's assessment of exposures and risks associated with establishing the tolerance follows.

A. Toxicological Profile

EPA has evaluated the available toxicity data and considered its validity, completeness, and reliability as well as the relationship of the results of the studies to human risk. EPA has also considered available information concerning the variability of the sensitivities of major identifiable subgroups of consumers, including infants and children. The nature of the toxic effects caused by zoxamide are discussed in the following Table 1 as well as the no observed adverse effect level (NOAEL) and the lowest observed adverse effect level (LOAEL) from the toxicity studies reviewed.

TABLE 1. ACUTE TOXICITY OF ZOXAMIDE - TECHNICAL (RH-117,281)

Guideline No.	Study Type	Results	Toxicity Category
870.1100	Acute Oral-Rat	LD_{50} > 5,000 mg/kg (males and females, combined)	IV
870.1100	Acute-Oral-Mouse	LD_{50} > 5,000 mg/kg (males and females, combined)	IV
870.1200	Acute Dermal-Rat	LD_{50} > 2,000 mg/kg (males and females, combined)	III
870.1300	Acute Inhalation-Rat	LC_{50} > 5.3 mg/L (males and females, combined)	IV
870.2400	Primary Eye Irritation-Rabbit	Moderate irritant; Corneal opacity on 6/6 rabbits with resolution by day 7. Iritis on 1/6 rabbits at 24 hours with resolution by 48 hours. Conjunctivitis on all rabbits at one hour with resolution by day 7.	III
870.2500	Primary Skin Irritation-Rabbit	Not an irritant	IV
870.2600	Dermal Sensitization: Maximization-Guinea pig	Strong sensitizer. Maximization Test: 100% treated showed erythema.	NA
870.2600	Dermal Sensitization: Buehler's Method-Guinea pig	Strong sensitizer. Buehler's Test: 80–90% treated showed erythema, grade 3 out of possible 4, appearing at 3rd induction phase and challenge phase.	NA

The primary target organ for oral exposure is the liver. In chronic and subchronic dog studies, liver and thyroid weights were increased along with liver histopathological changes and increases in alkaline phosphatase in the chronic study. There was no evidence of developmental or reproductive toxicity. The data demonstrate no increase sensitivity of rats or rabbits to *in utero* or early postnatal exposure to zoxamide. Carcinogenicity studies in rats and mice did not show increased incidence of spontaneous tumor formation. Zoxamide is classified as ''not likely'' human carcinogen. There was no evidence of neurotoxicity in the acute or subchronic neurotoxicity studies or in any other study in the data base. The toxicity data base for zoxamide is complete. See the following Table 2 for a discussion EPA's findings.

TABLE 2.—TOXICITY PROFILE OF ZOXAMIDE TECHNICAL

Guideline No.	Study Type (All Studies Acceptable)	Results
870.3100	90–Day oral toxicity rodents-mouse	NOAEL = 1,666 mg/kg/day; LOAEL not established

TABLE 2.—TOXICITY PROFILE OF ZOXAMIDE TECHNICAL—Continued

Guideline No.	Study Type (All Studies Acceptable)	Results
870.3150	90–Day oral toxicity in nonrodents-dog	NOAEL = 62 mg/kg/day in females, 281 mg/kg/day in males. LOAEL = 322 mg/kg/day in females and 1,139 mg/kg/day in males based on increased liver weights, hepatocellular hypertrophy (males), decrease in albumin and albumin/golbulin ratios (males).
870.3200	28-Day dermal toxicity-rat	Systemic: NOAEL ≥1,000 mg/kg, LOAEL not established; Dermal: NOAEL not established LOAEL < 150 mg/kg/day based on dermal scabbing increase with dosage in males and females, and epidermis of treated skin sites showed hyperplasia, hyperkeratosis, and inflammation.
870.3700a	Prenatal developmental in rodents-rat	Maternal NOAEL = 1,000 mg/kg/day; LOAEL > 1,000 mg/kg/day. Developmental NOAEL = 1,000 mg/kg/day LOAEL > 1,000 mg/kg/day.
870.3700b	Prenatal developmental in nonrodents-rabbit	Maternal NOAEL = 1,000 mg/kg/day; LOAEL > 1,000 mg/kg/day. Developmental NOAEL = 1,000 mg/kg/day; LOAEL > 1,000 mg/kg/day.
870.3800	Reproduction and fertility effects-rat	Parental/Systemic NOAEL = 409 mg/kg/day in females, 1,474 mg/kg/day in males; LOAEL = 1,624 mg/kg/day based on female decreased body weight and body weight gains. Reproductive NOAEL ≥ 2,091 mg/kg/day in males, 2,239 mg/kg/day in females; LOAEL = not established. Offspring NOAEL ≥ 2,091 mg/kg/day in males, 2,239 mg/kg/day in females; LOAEL = not established.
870.4100b	Chronic toxicity dogs	NOAEL = 50 mg/kg/day in males, 48 mg/kg/day in females; LOAEL = 255 mg/kg/day in males, 278 mg/kg/day in females based on decreased body weights, increased liver and thyroid weights, and increased alkaline phosphatase.
870.4300	Chronic/Carcinogenicity rats	NOAEL = 1,058 mg/kg/day; LOAEL = not established. No evidence of carcinogenicity
870.4300	Carcinogenicity mice	NOAEL = 1,021 mg/kg/day in males, 1,289 mg/kg/day in females; LOAEL = not established. No evidence of carcinogenicity
870.5265	Gene Mutation	Non-mutagenic when tested up to 5,000 μg/plate, in presence and absence of activation, in *S. typhimurium*.
870.5300	Cytogenetics	Non-mutagenic at the HGPRT locus in CHO cells tested up to 65 μg/mL, in presence and absence of activation.
870.5375	Chromosome aberration	Did not induce structural chromosome aberration up to limit of toxicity (100 μg/mL), but did induce increased levels of numerical aberrations, in presence and absence of activation.
870.5395	Micronucleus	Non-mutagenic in mouse bone marrow micronucleus assay up to 2,000 mg/kg.
870.6200a	Acute neurotoxicity screening battery-rat	NOAEL = 2,000 mg/kg/day; LOAEL = not established.
870.6200b	Subchronic neurotoxicity screening battery-rat	NOAEL = 1,509 mg/kg/day in males, 1,622 mg/kg/day in females; LOAEL = not established.
870.7485	Metabolism and pharmacokinetics - rat	120 hours post-dosing, 96–102% recovered from the low and high single-dose groups. Fecal excretion was the primary route of elimination. Parent compound was the principal component excreted, a total of 36 metabolites were detected in the urine and feces.
870.7600	Dermal penetration-rat	Total dermal absorption rate after 10–hour is 8.8% (includes amount on skin after wash).

B. Toxicological Endpoints

The dose at which no adverse effects are observed (the NOAEL) from the toxicology study identified as appropriate for use in risk assessment is used to estimate the toxicological level of concern (LOC). However, the lowest dose at which adverse effects of concern are identified (the LOAEL) is sometimes used for risk assessment if no NOAEL was achieved in the toxicology study selected. An uncertainty factor (UF) is applied to reflect uncertainties inherent in the extrapolation from laboratory animal data to humans and in the variations in sensitivity among members of the human population as well as other unknowns. An UF of 100 is routinely used, 10x to account for interspecies differences and 10x for intra species differences. The Agency evaluated the available hazard and exposure data for zoxamide and made the recommendation for the FQPA safety factor to be used in human health risk assessments (as required by the FQPA of August 3, 1996). The Agency concluded that the FQPA safety factor could be removed (i.e., reduced to 1x) in assessing the risk posed by this

chemical because: (1) There is no indication of quantitative or qualitative increased susceptibility of rats or rabbits to *in utero* and/or postnatal exposure; (2) A development neurotoxicity study conducted with zoxamide is not required; and (3) The dietary (food and drinking water) exposure assessments will not underestimate the potential exposures for infants and children. Additionally, there are currently no residential uses.

For dietary risk assessment (other than cancer) the Agency uses the UF to calculate an acute or chronic reference dose (acute RfD or chronic RfD) where the RfD is equal to the NOAEL divided by the appropriate UF (RfD = NOAEL/UF). Where an additional safety factor is retained due to concerns unique to the FQPA, this additional factor is applied to the RfD by dividing the RfD by such additional factor. The acute or chronic Population Adjusted Dose (aPAD or cPAD) is a modification of the RfD to accommodate this type of FQPA Safety Factor.

For non-dietary risk assessments (other than cancer) the UF is used to determine the LOC. For example, when 100 is the appropriate UF (10x to account for interspecies differences and 10x for intraspecies differences) the LOC is 100. To estimate risk, a ratio of the NOAEL to exposures (margin of exposure (MOE) = NOAEL/exposure) is calculated and compared to the LOC.

The linear default risk methodology (Q*) is the primary method currently used by the Agency to quantify carcinogenic risk. The Q* approach assumes that any amount of exposure will lead to some degree of cancer risk. A Q* is calculated and used to estimate risk which represents a probability of occurrence of additional cancer cases (e.g., risk is expressed as 1×10^{-6} or one in a million). Under certain specific circumstances, MOE calculations will be used for the carcinogenic risk assessment. In this non-linear approach, a ''point of departure'' is identified below which carcinogenic effects are not expected. The point of departure is typically a NOAEL based on an endpoint related to cancer effects though it may be a different value derived from the dose response curve. To estimate risk, a ratio of the point of departure to exposure (MOE_{cancer} = point of departure/exposures) is calculated. A summary of the toxicological endpoints for zoxamide used for human risk assessment is shown in the following Table 3:

TABLE 3.— SUMMARY OF TOXICOLOGICAL DOSE AND ENDPOINTS FOR ZOXAMIDE FOR USE IN HUMAN RISK ASSESSMENT

Exposure Scenario	Dose Used in Risk Assessment, UF	FQPA SF and Level of Concern for Risk Assessment	Study and Toxicological Effects
Acute Dietary (general population including infants and children)	None	None	No appropriate endpoint was identified by the HIARC on 11/18/99 for acute dietary exposure. Did not identify hazard.
Chronic Dietary (all populations)	NOAEL= 48 mg//kg/day UF = 100 Chronic RfD = 0.48 mg/kg/day	FQPA SF = 1x cPAD = chronic RfD/FQPA SF = 0.48 mg/kg/day	Chronic Toxicity Study - Dog LOAEL in males/females = 255/277 mg/kg/day based on body weight changes, increases in liver and thyroid weights, and increases in alkaline phosphatase.
Short-, Intermediate-, and Long-Term Dermal (Occupational/Residential)	none	No systemic toxicity was seen at the limit dose (1000 mg/kg/day). Did not identify hazard.	28-Day Repeated Dose Dermal - Rat
Any time period Inhalation (Occupational/Residential)	oral NOAEL= 48 mg/kg/day Use route-to-route extrapolation (inhalation absorption rate = 100%)	LOC for MOE = 100 (Occupational/Residential)	Chronic Toxicity Study - Dog LOAEL in males/females = 255/277 mg/kg/day based on body weight changes, increases in liver and thyroid weights, and increases in alkaline phosphatase.

* UF = uncertainty factor, FQPA SF = FQPA safety factor, NOAEL = no observed adverse effect level, LOAEL = lowestobserved adverse effect level, PAD = population adjusted dose (a = acute, c = chronic) RfD = reference dose, MOE = margin ofexposure, LOC = level of concern. The reference to the FQPA Safety Factor refers to any additional safety factorretained due to concerns unique to the FQPA.

C. Exposure Assessment

1. *Dietary exposure from food and feed uses.* Tolerances have been established (40 CFR part 180) for the combined residues of zoxamide and its metabolites 3,5-dichloro-1,4-benzenedicarboxylic acid (RH-1455 and RH141455) and (3,5-(dichloro-1,4-hydromethylbenzoic acid (RH-1452 and RH-141452, in or on potatoes and Zoxamide on grapes. Risk assessments were conducted by EPA to assess dietary exposures from zoxamide in food as follows:

i. *Acute exposure.* Acute dietary risk assessments are performed for a food-use pesticide if a toxicological study has indicated the possibility of an effect of concern occurring as a result of a one day or single exposure. Based on available data, a suitable endpoint for acute dietary risk assessment was not identified since no effects were observed in oral toxicity studies (including developmental studies) which could be attributed to a single-dose exposure. Therefore, an acute dietary risk assessment was not performed.

ii. *Chronic exposure.* In conducting this chronic dietary risk assessment the Dietary Exposure Evaluation Model (DEEM) analysis evaluated the individual food consumption as reported by respondents in the USDA 1989-1992 nationwide Continuing Surveys of Food Intake by Individuals (CSFII) and accumulated exposure to the chemical for each commodity. Chronic assessments use an average of the reported consumption values for each food form of a commodity multiplied by the residue concentration value, in this case a tolerance value, to estimate chronic dietary exposure.

The Tier I chronic analysis for zoxamide is a conservative estimate of the dietary exposure using tolerance-level residues of 100% crop-treated for all commodities. The chronic analysis was performed assuming tolerance level

residues for tomatoes and curcurbit vegetables at 2.0 and 1.0 ppm, respectively and 100% crop treated was assumed for all other commodites. The tolerance level residues for processed commodities were based on the actual processing data, the DEEM default concentration factors for tomato paste and puree were set to 1x. Residues did not concentrate in tomato processed fractions in this study. The highest resulting dietary estimate was 1.7% of the cPAD for children. 1-6 years old. For chronic dietary risk estimates the level of concern is >100% CPAD. Even without refinements, the estimated risk from chronic dietary exposure to zoxamide, as represented by the % cPAD, is below the level of concern for the population and all population subgroups.

TABLE 4.—CHRONIC DIETARY EXPOSURE ESTIMATES

Population subgroup[1]	Exposure, mg/kg/day	%cPAD[2]
U.S. population	0.0031	<1
All infants <1 year)	0.0018	<1
Children 1-6 yrs[3]	0.0084	1.7
Females 13-50 yrs	0.0024	<1
Males 13-19 yrs	0.0026	<1

[1] The subgroups listed are: (1) The U.S. Population (total); (2) those for infants and children; and, (3) the most highly exposed of the adult females and males subgroups (in this case, Females, ≤13 years, nursing)

[2] Percent Chronic PAD = (Exposure ÷ Chronic PAD) x 100%.

[3] There are no other subgroups, with the exception of Children, 1 to 6 years old, for which the percentage of the Chronic PAD occupied is greater than that occupied by the subgroup U. S. Population (total).

iii. *Cancer*. Zoxamide is not mutagenic in Ames assays, in CHO cells assay at the Hypoxonthine guanine phosphoribosyle transferase (HGPRT) locus, and in the mouse bone marrow micronucleus assay. Zoxamide did not induce structural chromosome aberrations in cultured CHO cells treated up to the limit of toxicity, but did induce increased levels of numerical aberrations. Carcinogenicity studies in rat and mice did not show increased incidence of spontaneous tumor formation. The Agency classified zoxamide as not likely to be a human carcinogen. Thus a cancer risk assessment is not required for zoxamide.

2. *Dietary exposure from drinking water*. The Agency lacks sufficient monitoring exposure data to complete a comprehensive dietary exposure analysis and risk assessment for zoxamide in drinking water. Because the Agency does not have comprehensive monitoring data, drinking water concentration estimates are made by reliance on simulation or modeling taking into account data on the physical characteristics of zoxamide.

The Agency uses the Generic Estimated Environmental Concentration (GENEEC) or the Pesticide Root Zone/ Exposure Analysis Modeling System (PRZM/EXAMS) to estimate pesticide concentrations in surface water and SCI-GROW, which predicts pesticide concentrations in groundwater. In general, EPA will use GENEEC (a tier 1 model) before using PRZM/EXAMS (a tier 2 model) for a screening-level assessment for surface water. The GENEEC model is a subset of the PRZM/ EXAMS model that uses a specific high-end runoff scenario for pesticides. GENEEC incorporates a farm pond scenario, while PRZM/EXAMS incorporate an index reservoir environment in place of the previous pond scenario. The PRZM/EXAMS model includes a percent crop area factor as an adjustment to account for the maximum percent crop coverage within a watershed or drainage basin.

The SCI-GROW model is used to predict pesticide concentrations in shallow groundwater. For a screening-level assessment for surface water EPA will use FIRST (a tier 1 model) before using PRZM/EXAMS (a tier 2 model). The FIRST model is a subset of the PRZM/EXAMS model that uses a specific high-end runoff scenario for pesticides. While both FIRST and PRZM/EXAMS incorporate an index reservoir environment, the PRZM/ EXAMS model includes a percent crop area factor as an adjustment to account for the maximum percent crop coverage within a watershed or drainage basin.

None of these models include consideration of the impact processing (mixing, dilution, or treatment) of raw water for distribution as drinking water would likely have on the removal of pesticides from the source water. The primary use of these models by the Agency at this stage is to provide a coarse screen for sorting out pesticides for which it is highly unlikely that drinking water concentrations would ever exceed human health levels of concern.

Since the models used are considered to be screening tools in the risk assessment process, the Agency does not use estimated environmental concentrations (EECs) from these models to quantify drinking water exposure and risk as a %RfD or %PAD. Instead drinking water levels of comparison (DWLOCs) are calculated and used as a point of comparison against the model estimates of a pesticide's concentration in water. DWLOCs are theoretical upper limits on a pesticide's concentration in drinking water in light of total aggregate exposure to a pesticide in food, and from residential uses. Since DWLOCs address total aggregate exposure to zoxamide they are further discussed in the aggregate risk sections below.

Based on the GENEEC, and PRZM/ EXAMS and SCI-GROW models the estimated environmental concentrations (EECs) of zoxamide for acute and chronic exposures are as follows:

A drinking water risk assessment was not performed as the proposed use rates do not exceed those already assessed. Therefore new dietary risk estimates from drinking water sources were not performed. Drinking water monitoring data are not available for zoxamide. No new EECs were provided for cucurbits and tomatoes because the application rates for these new uses approaches the maximum rate for grapes.

Tier I (GENEEC) modeling estimates that zoxamide residues (zoxamide + degradation products) in surface water, from aerial and ground application, are not likely to exceed 48.3 and 45.1 μg/ L for the 56 day average concentration (chronic) for grape and potato uses, respectively. However, it is the Agency's policy to divide chronic Tier 1 GENEEC EECs by a factor of 3 for comparison to DWLOCs. Therefore, the chronic surface water EECs based on GENEEC are 16.1 and 15 μg/L for grape and potato uses, respectively.

Tier II (PRZM/EXAMS) surface water modeling for zoxamide residues (zoxamide + degradation products), using the index reservoir with the percent cropped area, predicts the 1 in 10 year annual average (non-cancer chronic) concentration of zoxamide residues from grapes is not likely to exceed 21.8 μg/L and from potatoes is not likely to exceed 6.2 μg/L.

The SCI-GROW predicted concentration of zoxamide residues (zoxamide + degradation products) in shallow ground water is not expected to exceed 2.07 μg/L.]

3. *From non-dietary exposure*. The term ''residential exposure'' is used in this document to refer to non-occupational, non-dietary exposure (e.g., for lawn and garden pest control, indoor pest control, termiticides, and flea and tick control on pets).

Zoxamide is not registered for use on any sites that would result in residential exposure.

4. *Cumulative exposure to substances with a common mechanism of toxicity*. Section 408(b)(2)(D)(v) requires that,

when considering whether to establish, modify, or revoke a tolerance, the Agency consider ''available information'' concerning the cumulative effects of a particular pesticide's residues and ''other substances that have a common mechanism of toxicity.''

EPA does not have, at this time, available data to determine whether zoxamide has a common mechanism of toxicity with other substances or how to include this pesticide in a cumulative risk assessment. Unlike other pesticides for which EPA has followed a cumulative risk approach based on a common mechanism of toxicity, zoxamide does not appear to produce a toxic metabolite produced by other substances. For the purposes of this tolerance action, therefore, EPA has not assumed that zoxamide 3,5-dichloro-N-(3-chloro-1-ethyl-1-methyl-2-oxopropyl)-4-methylbenzamide has a common mechanism of toxicity with other substances. For information regarding EPA's efforts to determine which chemicals have a common mechanism of toxicity and to evaluate the cumulative effects of such chemicals, see the final rule for Bifenthrin Pesticide Tolerances (62 FR 62961, November 26, 1997).

D. Safety Factor for Infants and Children

1. *In general*. FFDCA section 408 provides that EPA shall apply an additional tenfold margin of safety for infants and children in the case of threshold effects to account for prenatal and postnatal toxicity and the completeness of the data base on toxicity and exposure unless EPA determines that a different margin of safety will be safe for infants and children. Margins of safety are incorporated into EPA risk assessments either directly through use of a margin of exposure (MOE) analysis or through using uncertainty (safety) factors in calculating a dose level that poses no appreciable risk to humans.

2. *Conclusion*. There is a complete toxicity data base for zoxamide and exposure data are complete or are estimated based on data that reasonably accounts for potential exposures. EPA determined that the 10x safety factor to protect infants and children should be removed. The FQPA factor is removed because:

i. There is no indication of quantitative or qualitative increased susceptibility of rats or rabbits to *in utero* and/or postnatal exposure;

ii. A developmental neurotoxicity study conducted with zoxamide is not required; and

iii. The dietary (food and drinking water) exposure assessments will not underestimate the potential exposures for infants and children. Additionally, there are currently no residential uses.

E. Aggregate Risks and Determination of Safety

1. *Acute risk*. Based on the data, EPA concluded that zoxamide does not pose an acute risk.

2. *Chronic risk*. The resulting dietary food exposures, from cucurbits and tomatoes, occupy <1% of the Chronic PAD for all population subgroups included in the analysis, except for children (1 to 6 years old) which is the highest exposed subgroup. The exposure for children (1 to 6 years old) utilizes 1.7% of the cPAD. The results of this dietary exposure analysis should be viewed as very conservative (health protective). Refinements such as use of percent crop-treated information and/or anticipated residue values would yield even lower estimates of chronic dietary exposure.

The EECs provided by the Agency for assessing chronic aggregate dietary risk are 2.07 µg/L (for ground water, based on SCI-GROW) and 21.8 µg/Lin surface water, based on PRZM/EXAMS modeling, 1 in 10 year annual average). The back-calculated DWLOCs for cucurbits and tomatoes (Table 5) for assessing chronic aggregate dietary risk range from 4800 µg/L for the population subgroup with the highest food exposure (Children, 1 to 6 years old) to 16,800 µg/L for the U.S. population (total) and Males 13-19 years.

The SCI-GROW and PRZM/EXAMS chronic EECs are less than the Agency's level of comparison (the DWLOC value for each population subgroup) for zoxamide residues in drinking water as a contribution to chronic aggregate exposure. Thus, the Agency concludes with reasonable certainty that residues of zoxamide in drinking water will not contribute significantly to the aggregate chronic human health risk and that the chronic aggregate exposure from zoxamide residues in food and drinking water will not exceed the Agency's level of concern (100% of the Chronic PAD) for chronic dietary aggregate exposure by any population subgroup. EPA generally has no concern for exposures below 100% of the Chronic PAD, because it is a level at or below which daily aggregate dietary exposure over a lifetime will not pose appreciable risks to the health and safety of any population subgroup. This risk assessment is considered high confidence, very conservative, and very protective of human health. There are no residential uses for zoxamide that result in chronic residential exposure to zoxamide.

TABLE 5.—CHRONIC DWLOC CALCULATIONS

Population Subgroup[1]	Chronic Scenario					
	cPAD (mg/kg/day)	Food Exposure (mg/kg/day)	Maximum Water Exposure (mg/kg/day)[2]	EEC Groundwater (µg/L)[3]	EEC Surface-water (µg/L)[4]	Chronic DWLOC (µg/L)[5]
U.S. population	0.48	0.0031	0.48	2.07	21.8	16,800
Children 1-6 yrs	0.48	0.0018	0.48	2.07	21.8	4,800
Females 13-50	0.48	0.0084	0.48	2.07	21.8	14,400
Males 13-19	0.48	0.0026	0.48	2.07	21.8	16,800

[1] The exposure for the highest representative population subgroup was reported. Body weights varied by subgroup: 70 kg for an adult male; 60 kg for an adult female; 10 kg for a child.
[2] Maximum Water Exposure (mg/kg/day) = cPAD (mg/kg/day) - Dietary Exposure from DEEM (mg/kg/day)
[3] The value from the model and crop producing the highest level was used (i.e. SCI-GROW value).
[4] The value from the model and crop producing the highest level was used (i.e. PRZM/EXAMS value for grapes).
[5] DWLOC(µg/L) = [maximum water exposure (mg/kg/day) x body weight (kg)]/[water consumption (L) x 10^{-3} mg/µg]

3. *Short-term risk*. The Agency did not identify a short-term dermal endpoint for zoxamide. There are no residential uses proposed for this fungicide, short term aggregate risk assessments based on exposure from

oral, inhalation, and dermal routes. For these reasons, no short term risk is expected.

4. *Intermediate-term risk*. The Agency did not identify an intermediate -term dermal endpoint for zoxamide. There are no residential uses proposed for this fungicide, intermediate-term aggregate risk assessments based on exposure from oral, inhalation and dermal routes. For these reasons, no intermediate-term risk is expected.

5. *Aggregate cancer risk for U.S. population*. The Agency classified zoxamide as not likely to be a human carcinogen. Therefore, no cancer risk is expected.

6. *Determination of safety*. Based on these risk assessments, EPA concludes that there is a reasonable certainty that no harm will result to the general population, and to infants and children from aggregate exposure to zoxamide residues.

IV. Other Considerations

A. Analytical Enforcement Methodology

The petitioner proposes a GC/ECD method, with LOD and validated LOQ of 0.003 and 0.01 ppm respectively, for the enforcement of tolerances on cucurbits and tomatoes. A GC/MSD method is proposed as a confirmatory method. Method validation recoveries indicate that the GC/ECD method adequately recovers residues of zoxamide from cucurbits, tomatoes, and tomato processed commodities. Adequate confirmatory method validation, radiovalidation, and independent method validation have been submitted for this method. The submitted GC/ECD method is similar to the enforcement method proposed for grapes and potatoes under PP 9F05058 which has been forwarded to ACB/BEAD for a petition method validation . A petition method validation was also requested for the GC/ECD enforcement method proposed for tomatoes and cucurbits (PP 0F06093).

The methods were successfully validated for tomatoes and cucurbits in one trial by the independent laboratory. A slight modification was made but only with the instrumental parameters. For tomatoes, the head pressure in the oven ramp was lowered from 13 to 7.5 psi because hydrogen was substituted as the carrier gas and the total detector flow was set at 15 mL/min of N_2 instead of 60 mL/min. For cucumber, the detection temperature was set at 315°C instead of 300 °C and the total detector flow was set at 12 mL/min instead of 60mL/min.). The changes were found necessary to optimize sensitivity of the Varian 3500 ECD and allow detection of zoxamide at the LOQ of 0.01 ppm. Apparent residues of zoxamide were nondetectable (<0.01 ppm) in/on two control samples each of cucumbers and tomatoes. The recoveries were between 70 - 120% with an RSD below 15% which were within the acceptable limits. Extraction of 6 samples took about 6-8 hours and analysis of samples and standards took about 5-6 hours.

Plant commodity samples collected from the field, processing, and storage stability studies were analyzed for residues of zoxamide using either the GC/ECD or GC/MSD method. The concurrent method recoveries indicate that both methods are adequate for data collection for cucurbits and tomatoes.

The methods are adequate for a conditional registration pending successful validation results and comments from ACB/BEAD.

The Residue Analytical Method - Plant Commodities are adequate for a conditional registration pending successful validation results and comments from The Analytical Chemistry Branch Laboratories, BEAD (7503C), Office of Pesticides Programs. Upon successful completion of the EPA validation and the granting of this registration, the method will be forwarded to FDA for publication in a future revision of the Pesticide Analytical Manual, Vol. II (PAM-II). Prior to publication and upon request , the validation will be available the Analytical Chemistry Branch (ACB), BEAD (7503C) Environmental Science Center, 701 Mapes Road, Ft. George C. Meade, MD 29755-5350. Contact Francis D. Griffith, Jr., telephone (410) 305-2905, e-mail: griffith.francis@epa.gov. The analytical standards are also available from the EPA National Pesticide Standard Repository at the same location.

The MRMs are adequate for enforcement of the proposed tolerances for zoxamide in/on cucurbits and tomatoes. The submission has been forwarded to FDA for complete evaluation in conjunction with the earlier petition.

B. International Residue Limits

There are currently no established Codex, Canadian, or Mexican maximum residue limits (MRLs) or tolerances for residues of zoxamide in/on tomatoes and cucurbits. Therefore, no compatibility issues exist with regard to the proposed U.S. tolerances discussed in this petition review.

C. Conditions

Additional storage stability data are required for residues of zoxamide in/on cucurbit vegetables stored 15.6 months, tomato fruit stored 15.2 months and tomato paste and puree stored 11.5 months. The additional storage stability data for tomatoes, tomato paste and puree and cucumber is a condition for the registration of zoxamide for use on tomatoes and cucurbits.

V. Conclusion

Therefore, the tolerance is established for combined residues of zoxamide and its metabolites 3,5-dichloro-1,4-benzenedicarboxylic acid (RH-1455 and RH-141455) and 3,5-dichloro-4-hydroxymethlbenzoic acid (RH-1452 and RH-141452), in or on tomatoes at 2.0 ppm and cucurbit vegetable group at 1.0 ppm.

VI. Objections and Hearing Requests

Under section 408(g) of the FFDCA, as amended by the FQPA, any person may file an objection to any aspect of this regulation and may also request a hearing on those objections. The EPA procedural regulations which govern the submission of objections and requests for hearings appear in 40 CFR part 178. Although the procedures in those regulations require some modification to reflect the amendments made to the FFDCA by the FQPA of 1996, EPA will continue to use those procedures, with appropriate adjustments, until the necessary modifications can be made. The new section 408(g) provides essentially the same process for persons to ''object'' to a regulation for an exemption from the requirement of a tolerance issued by EPA under new section 408(d), as was provided in the old FFDCA sections 408 and 409. However, the period for filing objections is now 60 days, rather than 30 days.

A. What Do I Need to Do to File an Objection or Request a Hearing?

You must file your objection or request a hearing on this regulation in accordance with the instructions provided in this unit and in 40 CFR part 178. To ensure proper receipt by EPA, you must identify docket control number OPP–301176 in the subject line on the first page of your submission. All requests must be in writing, and must be mailed or delivered to the Hearing Clerk on or before November 26, 2001.

1. *Filing the request*. Your objection must specify the specific provisions in the regulation that you object to, and the grounds for the objections (40 CFR 178.25). If a hearing is requested, the objections must include a statement of the factual issues(s) on which a hearing is requested, the requestor's contentions on such issues, and a summary of any evidence relied upon by the objector (40 CFR 178.27). Information submitted in

connection with an objection or hearing request may be claimed confidential by marking any part or all of that information as CBI. Information so marked will not be disclosed except in accordance with procedures set forth in 40 CFR part 2. A copy of the information that does not contain CBI must be submitted for inclusion in the public record. Information not marked confidential may be disclosed publicly by EPA without prior notice.

Mail your written request to: Office of the Hearing Clerk (1900), Environmental Protection Agency, 1200 Pennsylvania Ave., NW., Washington, DC 20460. You may also deliver your request to the Office of the Hearing Clerk in Rm. C400, Waterside Mall, 401 M St., SW., Washington, DC 20460. The Office of the Hearing Clerk is open from 8 a.m. to 4 p.m., Monday through Friday, excluding legal holidays. The telephone number for the Office of the Hearing Clerk is (202) 260–4865.

2. *Tolerance fee payment*. If you file an objection or request a hearing, you must also pay the fee prescribed by 40 CFR 180.33(i) or request a waiver of that fee pursuant to 40 CFR 180.33(m). You must mail the fee to: EPA Headquarters Accounting Operations Branch, Office of Pesticide Programs, P.O. Box 360277M, Pittsburgh, PA 15251. Please identify the fee submission by labeling it ''Tolerance Petition Fees.''

EPA is authorized to waive any fee requirement ''when in the judgement of the Administrator such a waiver or refund is equitable and not contrary to the purpose of this subsection.'' For additional information regarding the waiver of these fees, you may contact James Tompkins by phone at (703) 305–5697, by e-mail at tompkins.jim@epa.gov, or by mailing a request for information to Mr. Tompkins at Registration Division (7505C), Office of Pesticide Programs, Environmental Protection Agency, 1200 Pennsylvania Ave., NW., Washington, DC 20460.

If you would like to request a waiver of the tolerance objection fees, you must mail your request for such a waiver to: James Hollins, Information Resources and Services Division (7502C), Office of Pesticide Programs, Environmental Protection Agency, 1200 Pennsylvania Ave., NW., Washington, DC 20460.

3. *Copies for the Docket*. In addition to filing an objection or hearing request with the Hearing Clerk as described in Unit VI.A., you should also send a copy of your request to the PIRIB for its inclusion in the official record that is described in Unit I.B.2. Mail your copies, identified by docket control number OPP–301176, to: Public Information and Records Integrity Branch, Information Resources and Services Division (7502C), Office of Pesticide Programs, Environmental Protection Agency, 1200 Pennsylvania Ave., NW., Washington, DC 20460. In person or by courier, bring a copy to the location of the PIRIB described in Unit I.B.2. You may also send an electronic copy of your request via e-mail to: opp-docket@epa.gov. Please use an ASCII file format and avoid the use of special characters and any form of encryption. Copies of electronic objections and hearing requests will also be accepted on disks in WordPerfect 6.1/8.0 or ASCII file format. Do not include any CBI in your electronic copy. You may also submit an electronic copy of your request at many Federal Depository Libraries.

B. When Will the Agency Grant a Request for a Hearing?

A request for a hearing will be granted if the Administrator determines that the material submitted shows the following: There is a genuine and substantial issue of fact; there is a reasonable possibility that available evidence identified by the requestor would, if established resolve one or more of such issues in favor of the requestor, taking into account uncontested claims or facts to the contrary; and resolution of the factual issues(s) in the manner sought by the requestor would be adequate to justify the action requested (40 CFR 178.32).

VII. Regulatory Assessment Requirements

This final rule establishes a tolerance under FFDCA section 408(d) in response to a petition submitted to the Agency. The Office of Management and Budget (OMB) has exempted these types of actions from review under Executive Order 12866, entitled *Regulatory Planning and Review* (58 FR 51735, October 4, 1993). Because this rule has been exempted from review under Executive Order 12866 due to its lack of significance, this rule is not subject to Executive Order 13211, *Actions Concerning Regulations That Significantly Affect Energy Supply, Distribution, or Use* (66 FR 28355, May 22, 2001). This final rule does not contain any information collections subject to OMB approval under the Paperwork Reduction Act (PRA), 44 U.S.C. 3501 *et seq.*, or impose any enforceable duty or contain any unfunded mandate as described under Title II of the Unfunded Mandates Reform Act of 1995 (UMRA) (Public Law 104–4). Nor does it require any special considerations under Executive Order 12898, entitled *Federal Actions to Address Environmental Justice in Minority Populations and Low-Income Populations* (59 FR 7629, February 16, 1994); or OMB review or any Agency action under Executive Order 13045, entitled *Protection of Children from Environmental Health Risks and Safety Risks* (62 FR 19885, April 23, 1997). This action does not involve any technical standards that would require Agency consideration of voluntary consensus standards pursuant to section 12(d) of the National Technology Transfer and Advancement Act of 1995 (NTTAA), Public Law 104–113, section 12(d) (15 U.S.C. 272 note). Since tolerances and exemptions that are established on the basis of a petition under FFDCA section 408(d), such as the tolerance in this final rule, do not require the issuance of a proposed rule, the requirements of the Regulatory Flexibility Act (RFA) (5 U.S.C. 601 *et seq.*) do not apply. In addition, the Agency has determined that this action will not have a substantial direct effect on States, on the relationship between the national government and the States, or on the distribution of power and responsibilities among the various levels of government, as specified in Executive Order 13132, entitled *Federalism*(64 FR 43255, August 10, 1999). Executive Order 13132 requires EPA to develop an accountable process to ensure ''meaningful and timely input by State and local officials in the development of regulatory policies that have federalism implications.'' ''Policies that have federalism implications'' is defined in the Executive Order to include regulations that have ''substantial direct effects on the States, on the relationship between the national government and the States, or on the distribution of power and responsibilities among the various levels of government.'' This final rule directly regulates growers, food processors, food handlers and food retailers, not States. This action does not alter the relationships or distribution of power and responsibilities established by Congress in the preemption provisions of FFDCA section 408(n)(4). For these same reasons, the Agency has determined that this rule does not have any ''tribal implications'' as described in Executive Order 13175, entitled *Consultation and Coordination with Indian Tribal Governments* (65 FR 67249, November 6, 2000). Executive Order 13175, requires EPA to develop an accountable process to ensure ''meaningful and timely input by tribal officials in the development of regulatory policies that have tribal implications.'' ''Policies that have tribal implications'' is defined in the

Executive Order to include regulations that have ''substantial direct effects on one or more Indian tribes, on the relationship between the Federal government and the Indian tribes, or on the distribution of power and responsibilities between the Federal government and Indian tribes.'' This rule will not have substantial direct effects on tribal governments, on the relationship between the Federal government and Indian tribes, or on the distribution of power and responsibilities between the Federal government and Indian tribes, as specified in Executive Order 13175. Thus, Executive Order 13175 does not apply to this rule.

VIII. Submission to Congress and the Comptroller General

The Congressional Review Act, 5 U.S.C. 801 *et seq.*, as added by the Small Business Regulatory Enforcement Fairness Act of 1996, generally provides that before a rule may take effect, the agency promulgating the rule must submit a rule report, which includes a copy of the rule, to each House of the Congress and to the Comptroller General of the United States. EPA will submit a report containing this rule and other required information to the U.S. Senate, the U.S. House of Representatives, and the Comptroller General of the United States prior to publication of this final rule in the **Federal Register**. This final rule is not a ''major rule'' as defined by 5 U.S.C. 804(2).

List of Subjects in 40 CFR Part 180

Environmental protection, Administrative practice and procedure, Agricultural commodities, Pesticides and pests, Reporting and recordkeeping requirements.

Dated: September 13, 2001.

Peter Caulkins,

Acting Director, Registration Division, Office of Pesticide Programs.

Therefore, 40 CFR chapter I is amended as follows:

PART 180— [AMENDED]

1. The authority citation for part 180 continues to read as follows:

Authority: 21 U.S.C. 321(q), 346(a) and 371.

2. Section 180.567 is amended by alphabetically adding commodities to the table in paragraph (a)(2) to read as follows:

§ 180.567 Zoxamide;tolerance for residues.

(a) * * *

(2)* * *

Commodity	Parts per million
Cucurbit vegetable group	1.0
* * * * *	
Tomato	2.0

* * * * *

[FR Doc. 01–23640 Filed 9–25–01; 8:45 am]

BILLING CODE 6560–50–S

ENVIRONMENTAL PROTECTION AGENCY

40 CFR Part 271

[FRL–7065–7]

California: Final Authorization of Revisions to State Hazardous Waste Management Program

AGENCY: Environmental Protection Agency (EPA).

ACTION: Notice of final determination on application of California for Final Authorization of Revisions to State Hazardous Waste Management Program.

SUMMARY: California has applied for final authorization of certain revisions to its hazardous waste program under the Resource Conservation and Recovery Act (RCRA). The Environmental Protection Agency (EPA) has reviewed California's application and has reached a final determination that the revisions to California's hazardous waste program satisfy all of the requirements necessary to qualify for final authorization. Thus, with respect to these revisions, EPA is granting final authorization to the State to operate its program subject to the limitations on its authority retained by EPA in accordance with the Hazardous and Solid Waste Amendments of 1984.

EFFECTIVE DATE: Final authorization for the revisions to California's hazardous waste management program shall be effective at 1 p.m. on September 26, 2001.

FOR FURTHER INFORMATION CONTACT: Rebecca Smith, WST–3, U.S. EPA Region 9, 75 Hawthorne Street, San Francisco 94105–3901, (415) 744–2152.

SUPPLEMENTARY INFORMATION:

A. Why Are Revisions to State Programs Necessary?

States which have received final authorization from EPA under RCRA Section 3006(b), 42 U.S.C. 6926(b), must maintain a hazardous waste program that is equivalent to, consistent with, and no less stringent than the Federal program. As the Federal program changes, states must change their programs and ask EPA to authorize the changes. Changes to state programs may be necessary when Federal or state statutory or regulatory authority is modified or when certain other changes occur. Most commonly, states must change their programs because of changes to EPA's regulations in 40 Code of Federal Regulations (CFR) parts 124, 260 through 266, 268, 270, 273 and 279.

California initially received final authorization on July 23, 1992, effective August 1, 1992 (57 FR 32726), to implement the RCRA hazardous waste management program. This ''base program authorization'' authorized California's RCRA program based on California statutory and regulatory provisions enacted and adopted prior to December 20, 1991, the date of California's authorization application. On January 31, 2000, California submitted a final complete program revision application, seeking authorization of their changes in accordance with 40 CFR 271.21.

B. What Were the Comments and Responses to EPA's Proposal?

On June 20, 2001, EPA published a tentative determination announcing its intent to grant California final authorization for the revisions to its base program. Further background on the tentative decision to grant authorization appears at Vol. 66, No. 119, June 20, 2001 at pages 33037–33046.

Along with the tentative determination, EPA announced the availability of the application for public comment. EPA received four sets of written comments during the public comment period. One of the four commenters submitted relatively lengthy comments regarding EPA's tentative determination (22 pages total). The other three commenters submitted relatively brief comments (1–2 pages total, each), which generally endorsed the comments submitted by the first commenter. The first commenter also submitted an 8 page supplement to its comments well after the close of the public comment period. These comments were received by EPA on September 4, 2001, although the public comment period closed on July 20, 2001. The significant issues raised by the commenters and EPA's responses are summarized below. EPA has included a response to the supplemental comments as well, (*see* Response to Comment #3, below).

Comment #1: The commenters asserted that California's exclusion of secondary lead smelter furnaces from the boilers and industrial furnaces (BIFs) conditional exemption found in the Federal regulation at 40 CFR 266.100(d) (formerly 266.100(c)) is neither consistent with nor equivalent to the provisions of the Federal program. They further stated that excluding industrial furnaces from the conditional exemption afforded under the Federal BIF program and regulating such units as miscellaneous units under California's program is inconsistent with RCRA's goals. The commenters maintained that California failed to provide a rational basis for departing from the Federal-regulatory scheme in which air emissions from certain industrial furnaces are regulated under the Clean Air Act in lieu of RCRA and that California's exclusion of secondary lead smelters from the conditional exemption of Title 22 California Code of Regulations 66266.100(c) may lead to duplicative and inconsistent regulation of secondary lead smelters.

Response to Comment #1: States may be authorized to administer a hazardous waste program unless EPA determines that: (1) The state program is not equivalent to the Federal RCRA program; (2) the state program is not consistent with the Federal or state programs applicable in other states; or (3) the state program does not provide adequate enforcement of compliance with RCRA. RCRA Section 3006(b), 42 U.S.C. 6926(b).

EPA's regulations provide specific factors to consider in determining whether a state program is consistent with the Federal program and other authorized state programs. 40 CFR 271.4. In general, a state program may be deemed inconsistent if it unreasonably restricts the free movement of hazardous waste across state borders, if it has no basis in human health or environmental protection and acts as a prohibition on the treatment, storage or disposal of hazardous waste, or if the state's manifest system does not meet the requirements of 40 CFR Part 271. 40 CFR 271.4(a)–(c).

Although state programs must be consistent with the Federal program and other authorized state programs, RCRA expressly allows state and local governments to adopt requirements that are more stringent than the Federal RCRA requirements. RCRA Section 3009, 42 U.S.C. 6929. EPA has also indicated that states are free to operate programs ''with a greater scope of coverage'' than the Federal program but that ''the additional coverage is not part of the Federally approved program.'' 40 CFR 271.1(i)(2). In determining whether a state program that differs from the Federal program is broader in scope than the Federal program, as opposed to being more stringent, EPA will generally consider: (1) whether the imposition of the state requirement increases the size of the regulated community beyond that of the Federal program; and (2) whether the state's requirement has a direct counterpart in the Federal regulatory program. *See, e.g.,* OSWER Directive No. 9541.1984(04), Determining Whether State Hazardous Waste Management Requirements are Broader in Scope or More Stringent than the Federal RCRA Program, May 21, 1984.

In June of 1997, California submitted its application for authorization of changes to its program relating to the burning of hazardous waste in BIFs. Title 22 of the California Code of Regulations (C.C.R.) at Sections 66266.100(c) and (f) tracked the Federal analogous provisions at 40 CFR 266.100(d) and (g), respectively. The Federal provisions conditionally exclude certain BIFs from regulation under RCRA. However, the State also added the following language to both 22 C.C.R. Sections 66266.100(c) and (f): ''Additionally, industrial furnaces exempted by this subsection are subject to regulation as miscellaneous units.'' California also amended its definition of the term ''miscellaneous unit'' at 22 C.C.R. Section 66260.10 to conform that definition to the language it had added to 22 C.C.R. Sections 66266.100(c) and (f).

In June of 1997, the language in 22 C.C.R. Sections 66260.10, 66266.100(c) and 66266.100(f) that differs from the Federal regulatory language was included in California's regulations on an emergency basis only. These provisions were not finally adopted on a permanent basis by the State until May of 1998. Neither the checklists nor the Attorney General's statement, which were submitted with California's application for authorization of revisions to its BIF program, identified the differences between the State and Federal regulatory language. EPA has now confirmed with the State that the inclusion of the different language in the regulations submitted with California's BIF revisions application was an unintentional oversight.

However, even if California had sought authorization of the language in the provisions at 22 C.C.R. Sections 66260.10, 66266.100(c) and 66266.100(f) that differs from the Federal language, EPA has determined that the State's language increases the size of the universe of units which are required to have permits as miscellaneous units. Thus, these provisions make the State's permit program broader in scope than the Federal program in this respect. Since EPA does not authorize state requirements which are broader in scope than the Federal RCRA program, the language in these provisions that is different from the Federal program is not and will not be included in California's authorized hazardous waste program.

For the purposes of today's rule, it is not necessary for EPA to opine on whether or not the subject State provisions are preempted by RCRA. Since EPA has determined that these provisions are broader in scope than the Federal program, EPA is not authorizing these provisions. Thus, the question of whether or not the State's regulation of the Federally conditionally exempt units is or is not consistent with RCRA or its policies is not relevant in the context of this decision to authorize certain other revisions to California's RCRA program. However, EPA does not regard California's statutory requirements that resource recovery facilities obtain hazardous waste facilities permits as fundamentally inconsistent with RCRA or its policies (*see* California Health and Safety Code Sections 25200 and 25201). Regulation of emissions (or other releases) from hazardous waste recycling units is not inherently inconsistent with RCRA provisions or purposes. *See, e.g.,* RCRA Section 3004 (q), commanding regulation of air emissions from some classes of hazardous waste recyclers. This lends further support to EPA's determination that the regulation by the State of conditionally exempt BIFs as miscellaneous units—albeit broader in scope than the Federal program—does not warrant a decision not to authorize the other California provisions which are being authorized today.

Comment #2: The commenters asked EPA to ensure that it is reviewing the most recent version of the California BIF and miscellaneous unit regulations in assessing whether authorization should be granted to the State.

Response to Comment #2: In reviewing California's application regarding revisions to its BIF program, EPA did not look to the most recent State provisions in effect at the time EPA promulgated its tentative decision to authorize those revisions. Rather, EPA looked to the requirements in effect on a non-emergency basis in the State as of the date that portion of California's application was submitted. In this case, EPA looked to the non-emergency regulations in effect as of June of 1997.

In reviewing these requirements, EPA ensured that the State's requirements

continued to be in effect, but EPA is not authorizing any revisions or amendments to California's BIF requirements which may have gone into effect after the date of the submittal of the BIF portion of the application for authorization. Nor is EPA authorizing any BIF requirements which existed on an emergency basis only in June of 1997, even if such requirements were adopted at a later date on a permanent basis.

Comment #3: One of the commenters asserted that California's regulations at 22 C.C.R. Sections 66261.24(a)(2)(A)(i) and (B)(i), which regulate as characteristic, toxic wastes certain inorganic and organic substances as persistent, bioaccumulative and toxic, are neither consistent with nor equivalent to the Federal program. The commenter argued that these provisions should not be authorized.

Response to Comment #3: The regulations to which these comments are aimed were submitted as part of California's base program authorization application in December of 1991. As explained above, states are free to operate programs ''with a greater scope of coverage'' than the Federal program but ''the additional coverage is not part of the Federally approved program.'' 40 CFR 271.1(i)(2). Additionally, in determining whether a state program that differs from the Federal program is broader in scope than the Federal program, EPA will consider: (1) Whether the imposition of the state requirement increases the size of the regulated community beyond that of the Federal program; and (2) whether the state's requirement has a direct counterpart in the Federal regulatory program. *See, e.g.,* OSWER Directive No. 9541.1984(04), Determining Whether State Hazardous Waste Management Requirements are Broader in Scope or More Stringent than the Federal RCRA Program, May 21, 1984.

Since 22 C.C.R. Sections 66261.24(a)(2)(A)(i) and (B)(i) do not have any direct Federal counterparts, and increase the size of the universe of regulated hazardous wastes, EPA, in making its base program authorization decision for the State of California's hazardous waste program, determined that these provisions were broader in scope than the Federal program. Thus, these provisions were not included in the scope of the authorized base program. The revisions to the base program, which are the subject of today's rule, do not affect that determination.

Since EPA has not authorized the provisions which are the subject of this comment, the question of whether or not the State's regulation of such wastes is or is not consistent with RCRA or its policies is not relevant in the context of this decision to authorize certain other revisions to California's RCRA program. Even so, EPA does not regard California's regulation of these wastes as non-RCRA hazardous waste as fundamentally inconsistent with RCRA or its policies.

C. What Decisions Have We Made in This Rule?

EPA has made the final determination that California's application for authorization of the subject revisions meets all of the statutory and regulatory requirements established by RCRA. Therefore, with respect to the revisions, we are granting California final authorization to operate its hazardous waste program as described in the revisions authorization application. California will continue to have responsibility for permitting Treatment, Storage, and Disposal Facilities (TSDFs) within its borders and for carrying out the aspects of the RCRA program described in its revised program application, subject to the limitations of the Hazardous and Solid Waste Amendments of 1984 (HSWA). New Federal requirements and prohibitions imposed by Federal regulations that EPA promulgates under the authority of HSWA take effect in authorized states before such states are authorized for the requirements. Thus, for revisions to the Federal program for which California has not yet sought authorization, EPA will continue to implement those HSWA requirements and prohibitions in California, including issuing permits, until the State is granted authorization to do so.

D. What Is the Effect of Today's Action?

A facility in California subject to RCRA must comply with the authorized State requirements in lieu of the corresponding Federal requirements in order to comply with RCRA. Additionally, such persons must comply with any applicable Federally-issued requirements, such as, for example, HSWA regulations issued by EPA for which the State has not received authorization, and RCRA requirements that are not supplanted by authorized state-issued requirements. California continues to have enforcement responsibilities under its State law to pursue violations of its hazardous waste management program. EPA continues to have independent authority under RCRA Sections 3007, 3008, 3013, and 7003, which include, among others, the authority to:

- Do inspections, and require monitoring, tests, analyses or reports,
- Enforce RCRA requirements (including State-issued statutes and regulations that are authorized by EPA and any applicable Federally-issued statutes and regulations) and suspend or revoke permits, and
- Take enforcement actions regardless of whether the State has taken its own actions.

This action approving the subject revisions does not impose additional requirements on the regulated community because the regulations for which California is being authorized are already effective under State law and are not changed by the act of authorization.

EPA cannot delegate the Federal requirements at 40 CFR part 262, subparts E and H. Although California has adopted these requirements verbatim from the Federal regulations in Title 22 of the California Code of Regulations, Sections 66260–66262, EPA will continue to implement those requirements.

E. What Rules Are We Authorizing With Today's Action?

California initially received final authorization on July 23, 1992, effective August 1, 1992 (57 FR 32726), to implement the RCRA hazardous waste management program. This ''base program authorization'' authorized California's RCRA program based on California statutory and regulatory provisions in effect as of December of 1990. On January 31, 2000, California submitted a final complete program revision application, seeking authorization of their changes in accordance with 40 CFR 271.21.

California has applied for many of the Federal changes to the RCRA program since it was authorized for the base program. The earliest of these Federal changes goes back to 1989. However, there are several changes to the Federal program which have been made since California's base program was authorized for which California has not yet applied for authorization. The major areas of changes for which California has not yet applied for authorization are: the used oil regulations; consolidated liability requirements; military munitions; phases three and four of the land disposal restrictions; and universal waste.

Since authorization of California's base program in 1992, California has submitted numerous packages to EPA relating to its efforts to seek authorization for updates to its program based on revisions to the Federal program. EPA has published a series of

checklists to aid California and the other states in such efforts, (*see* EPA's RCRA State Authorization web page at www.epa.gov/epaoswer/hazwaste/state/index.htm). Each checklist generally reflects changes made to the Federal regulations pursuant to a particular **Federal Register** notice. California's submittals have been grouped into general categories (*e.g.,* Air Emissions Standards, Boilers and Industrial Furnaces, etc.). Each submittal may have reflected changes based on one or more **Federal Register** notices and would have thus referenced one or more corresponding checklists.

What follows is a summary, for each general category identified by California in its submittals, of the specific subjects of changes to the Federal program for that category. Although the changes to the Federal program are identified in the summary, California did not necessarily make revisions to its program as a result of each Federal revision noted. For example, certain revisions to the Federal program may have resulted in less stringent regulation than that which previously existed. Since states may maintain programs which are more stringent than the Federal program, states have the option whether or not to adopt such revisions.

1. Changes California Identified as Relating to Air Emissions Standards

We are granting California final authorization for all revisions that it has made to its program due to certain changes to the Federal program in the following areas: Organic air emission standards for process vents and equipment leaks; and organic air emissions standards for tanks, surface impoundments and containers.

2. Changes California Identified as Relating to the Toxicity Characteristic

We are granting California final authorization for all revisions that it has made to its program due to certain changes to the Federal program in the following areas: Interim status standards for down-gradient ground-water monitoring well locations; hydrocarbon recovery operations; chlorofluorocarbon refrigerants; the mining waste exclusion; the recycled coke by-product exclusion; the toxicity characteristic leaching procedure; the mixture and derived-from rules; the removal of strontium sulfide from the list of hazardous wastes; the adoption of an administrative stay for K069 listing (emission control dust/sludge from secondary lead smelting); the adoption of certain technical corrections to the 1990 toxicity characteristic rule; the listing of chlorinated toluene production waste (K149, K150, K151); the standards for treating liquids in landfills; the references which specify testing requirements and monitoring activities; the listing of hazardous constituents from the use of chlorophenolic formulations in wood surface protection; the reference relating to wood surface protection; the listing of beryllium powder (P015); and provisions to be met for excluding as a hazardous waste certain wastewaters from the production of carbamates and carbamoyl oximes (K157).

3. Changes California Identified as Relating to Corrective Action Management

We are granting California final authorization for all revisions that it has made to its program due to certain changes to the Federal program in the following areas: Corrective action management units and temporary units.

These changes include final authorization of California for the February 16, 1993 Corrective Action Management Unit (CAMU) rule. Since California is now authorized for the rule, the State will be eligible for interim authorization-by-rule for the proposed amendments to the CAMU rule, which also proposed the interim authorization-by-rule process (*see* August 22, 2000, 65 FR 51080, 51115). California will also be eligible for conditional authorization if that alternative is chosen by EPA in the final CAMU amendments rule.

4. Changes California Identified as Relating to Boilers and Industrial Furnaces

We are granting California final authorization for all revisions that it has made to its program due to certain changes to the Federal program in the following areas: Burning of hazardous waste in boilers and industrial furnaces; an administrative stay for coke ovens; the recycled coke by-products exclusion; certain coke by-products listings; guidelines for air quality modeling and screening for boilers and industrial furnaces burning hazardous waste; the adoption of an administrative stay and interim standards for Bevill residues; and certain technical amendments to record keeping instructions.

5. Changes California Identified as Relating to Wood and Sludge

We are granting California final authorization for all revisions that it has made to its program due to certain changes to the Federal program in the following areas: Wood preserving listings; and petroleum refinery primary and secondary oil/water/solids separation sludge listings.

We also find that California did not need to adopt a Federal administrative stay for the requirement that existing drip pads be impermeable because the stay expired on October 30, 1992.

6. Changes California Identified as Relating to Liners and Leak Detection

We are granting California final authorization for all revisions that it has made to its program due to certain changes to the Federal program in the following area: Liners and leak detection systems for hazardous waste land disposal units.

7. Changes California Identified as Relating to Recyclable Materials Used in a Manner Constituting Disposal

We are granting California final authorization for all revisions that it has made to its program due to certain changes to the Federal program in the following area: The removal of the conditional exemption for certain slag residues.

8. Changes California Identified as Relating to Recovered Oil

We are granting California final authorization for all revisions that it has made to its program due to certain changes to the Federal program in the following area: The recovered oil exclusion.

9. Changes California Identified as Relating to Delay of Closure

We are granting California final authorization for all revisions that it has made to its program due to certain changes to the Federal program in the following area: The delay of closure period for hazardous waste management facilities.

10. Changes California Identified as Relating to Public Participation

We are granting California final authorization for all revisions that it has made to its program due to certain changes to the Federal program in the following area: Expanded public participation.

11. Changes California Identified as Relating to Used Oil Filters

We are granting California final authorization for all revisions that it has made to its program due to certain changes to the Federal program in the following area: The used oil filter exclusion.

12. Changes California Identified as Relating to Land Disposal Restrictions (LDR)

We are granting California final authorization for all revisions that it has made to its program due to certain changes to the Federal program in the following areas: LDR third scheduled wastes; electric arc furnace dust (K061); LDRs for newly listed wastes and hazardous debris; LDRs for ignitable and corrosive characteristic wastes whose treatment standards were vacated; case-by-case capacity variances for hazardous debris; case-by-case capacity variances for lead-bearing hazardous materials; case-by-case capacity variances for hazardous soil; and universal treatment standards and treatment standards for organic characteristic wastes and newly listed wastes.

13. Changes California Identified as Relating to Exports

We are granting California final authorization for all revisions that it has made to its program due to certain changes to the Federal program in the following area: The identification of the U.S. EPA office to which the notification of export activities and annual export reports must be sent. California has also adopted the Federal regulations implementing a graduated system of procedural and substantive controls for hazardous wastes as they move across national borders within the Organization for Economic Cooperation and Development (OECD) for recovery. The requirements for regulating exports, Subparts E and H of 40 CFR Part 262, will be administered by the U.S. EPA instead of California because the exercise of foreign relations and international commerce powers is delegated to the Federal government under the Constitution. California has adopted these export rules into Title 22 California Code of Regulations for the convenience of the regulated community.

14. Miscellaneous Changes

We are granting California final authorization for all revisions that it has made to its program due to certain changes to the Federal program which removed certain legally obsolete rules.

EPA published a table in its notice of its tentative decision to authorize the foregoing revisions to California's hazardous waste management program, which shows the Federal and analogous State provisions involved in this decision and the relevant corresponding checklists. *See* 66 FR 33037, at pages 33039–33044 (June 20, 2001).

F. Where Are the State Rules Different From the Federal Rules?

State requirements that go beyond the scope of the Federal program are not part of the authorized program and EPA cannot enforce them. Although persons must comply with these requirements in accordance with California law, they are not RCRA requirements. EPA considers that the following State requirements, which pertain to the revisions involved in this decision, go beyond the scope of the Federal program.

The following analysis differs in some ways from the areas which California identified as being broader in scope than the Federal program in its application.

1. The definition of ''remediation waste'' at 22 C.C.R. Section 66260.10 is broader in scope than the Federal definition at 40 CFR 260.10 only to the extent California's definition includes hazardous substances which are neither ''hazardous wastes'' nor ''solid wastes.''

2. 22 C.C.R. Section 66264.552(e)(4)(A)(2) is broader in scope than 40 CFR 264.552(e)(4)(i)(B) only to the extent the California provision controls the escape of ''hazardous substances'' which are not ''hazardous waste,'' ''hazardous constituents,'' ''leachate,'' ''contaminated runoff'' or ''hazardous waste decomposition products.''

3. California's program is broader in scope than the Federal program to the extent it regulates spent wood preserving solutions that have been used and are reclaimed and reused for their original intended purpose and wastewaters from the wood preserving process that have been reclaimed and are reused to treat wood. These materials are excluded from the Federal definition of solid waste by virtue of 40 CFR 261.4(a)(9)(i) and (ii), respectively.

4. HSC Section 25144(c) is broader in scope than 40 CFR 261.4(a)(12) since the California provision exempts oil recovery process units and associated storage units from regulation, rather than exempting recovered oil from the definition of solid waste, which is what the Federal provision does. Thus, the State program is broader in scope than the Federal program to the extent California regulates recovered oil not contained in such recovery process units or associated storage units.

5. HSC Section 25143.2(c)(1) was broader in scope than was former section 40 CFR 261.6(a)(3)(vi) (renumbered as 261.6(a)(3)(v) in 1995 [60 FR 25492] [1]), which exempted from regulation petroleum coke produced from petroleum refinery hazardous waste containing oil produced by the same person who generated the waste unless the resulting coke product was characteristically hazardous. HSC Section 25143.2(c)(1), which was part of the authorized program, was not amended to conform to the changes made to 40 CFR 261.6(a)(3)(vi) in 1994. At that time, the Federal exemption was expanded to include petroleum coke produced *by the same person* who generated the petroleum hazardous waste containing oil, rather than being limited to petroleum coke produced *at the same facility* at which such wastes were generated. The State's exemption retains the ''at the same facility'' language and, to this extent, is broader than the Federal requirement.[2]

6. California does not have the Federal exclusion found at 40 CFR 261.4(b)(13), which excludes from the definition of hazardous waste non-terne plated used oil filters that are not mixed with hazardous wastes if those filters are gravity hot drained in accordance with specified procedures. To the extent California regulates such oil filters, its program is broader in scope than the Federal program.

7. California has not adopted the Federal exclusion found at 40 CFR 261.4(a)(10). This provision excludes from the definition of solid waste K060, K070, K087, K141, K142, K143, K145, K147, K148, and those coke by-product residues that are hazardous only because they exhibit the toxicity characteristic when, subsequent to generation, these wastes are recycled by being returned to coke ovens, to the tar recovery process as a feedstock to produce coal tar or mixed with coal tar. The Federal exclusion is conditioned on there being no land disposal of the waste from the point of generation to the point of recycling. Thus, the absence of this exemption makes the California program broader than the Federal program in this respect.

8. California has not adopted the Federal provision at 40 CFR 266.100(b)(3), which exempts from regulation the burning of wastes produced by conditionally exempt small quantity generators (*see also* 40 CFR 261.5). Thus, California's program is broader in scope than the Federal program in this respect.

9. California has not adopted the Federal provision at 40 CFR

[1] 40 CFR 261.6(a)(3)(v) was superceded by 261.4(a)(12) in 1998 (63 FR 42110).

[2] The 1998 revision to 261.4(a)(12) changed the Federal requirement again to limit the exemption to materials which are inserted into the same petroleum refinery where they are generated or sent directly to another petroleum refinery. Thus the State's exemption remains narrower than the Federal exemption in this respect.

266.100(b)(4), which excludes from regulation coke ovens if the only hazardous waste burned is K087, decanter tank tar sludge from coking operations. The Federal provision was a necessary corollary to EPA's removal of the coke and coal tar exemption (formerly 40 CFR 261.6(a)(3)(vii)) due to the reclassification of coke and coal tar as products under 40 CFR 261.4(a)(10) in 1991. California had not adopted the exemption as part of the base program, nor did it adopt the 1991 exemption at 40 CFR 261.4(a)(10). Thus, the California program is broader in scope than the Federal program to the extent California regulates coke ovens that solely burn K087.

10. The California provision at 22 C.C.R. Section 66266.100(b)(3) excludes from regulation in BIFs those materials which are exempted from regulation at 22 C.C.R. Section 66261.4. This provision tracks the Federal provision at 40 CFR 266.100(b)(3), which excludes from regulation in BIFs those materials which are exempted from regulation at 40 CFR 261.4. The Federal provision at 40 CFR 261.4 includes more exemptions than the State provision at 22 C.C.R. Section 66266.4 and, therefore, California's BIF program is broader in scope than the Federal program in this respect.

11. 40 CFR 261.4(a)(11) excludes from the definition of solid waste, non-wastewater splash condenser dross residue from the treatment of K061 in high temperature metals recovery units provided it is shipped in drums (if shipped) and is not land disposed before recovery. California has not adopted this exclusion and its program is thus broader in scope than the Federal program in this respect.

12. California's program is broader in scope than the Federal program with respect to the regulation of secondary materials that are recycled back into secondary production processes from which they were generated. 40 CFR 261.2(e)(1)(iii) exempts such materials, so long as the materials are managed such that there is no placement on the land. HSC 25143.2(b)(3), as restricted by HSC Sections 25143.2(e) and 25143.9, which is the State's analogue to 40 CFR 261.2(e)(1)(iii), excludes only recyclable materials that are returned to a primary process.

13. The language contained in the provisions of 22 C.C.R. Sections 66260.10, 66266.100(c) and 66266.100(f), which is discussed in the response to comments in Section B of this preamble, above, make certain units that are conditionally exempt from the Federal and State BIF regulations regulated as miscellaneous units under California regulations. To this extent, 22 C.C.R. Sections 66260.10, 66266.100(c) and 66266.100(f) are broader in scope than the Federal program and the corresponding Federal regulations at 40 CFR Sections 260.10, 266.100(d) [3] and 266.100(g).[4]

G. Who Handles Permits After This Authorization Takes Effect?

California will issue permits for all the provisions for which it is authorized and will administer the permits it issues. All permits issued by EPA prior to California being authorized for these revisions will continue in force until the effective date of the State's issuance or denial of a State RCRA permit, or the permit otherwise expires or is revoked. California will administer any RCRA hazardous waste permits or portions of permits which EPA issued prior to the effective date of this authorization until such time as California has issued a corresponding State permit. EPA will not issue any more new permits or new portions of permits for provisions for which California is authorized after the effective date of this authorization. EPA will retain responsibility to issue permits for HSWA requirements for which California is not yet authorized.

H. How Does Today's Action Affect Indian Country (18 U.S.C. 115) in California?

California is not authorized to carry out its hazardous waste program in Indian country within the State. A map of Indian Country in California can be found on the world wide web at *www.epa.gov/region09/cross_pr/indian/maps.html.* A list of Indian Tribes in California can be found on the web at *www.doi.gov/bureau-indian-affairs;* it is complete except for two newly listed tribes, Graton and Lower Lake Rancherias. Therefore, this action has no effect on the Indian country so described, including Graton and Lower Lake Rancherias. EPA will continue to implement and administer the RCRA program in Indian country within the State.

I. What Is Codification and Is EPA Codifying California's Hazardous Waste Program as Authorized in This Rule?

Codification is the process of placing the State's statutes and regulations that comprise the State's authorized hazardous waste program into the Code of Federal Regulations. EPA does this by referencing the authorized State rules in 40 CFR part 272. EPA is reserving the amendment of 40 CFR part 272, subpart F for codification of California's program at a later date.

J. Administrative Requirements

The Office of Management and Budget has exempted this action from the requirements of Executive Order 12866 (58 FR 51735, October 4, 1993), and therefore this action is not subject to review by OMB. Furthermore, this rule is not subject to Executive Order 13211, ''Actions Concerning Regulations That Significantly Affect Energy Supply, Distribution, or Use'' (66 FR 28355, May 22, 2001) because it is not a significant regulatory action under Executive Order 12866. This action authorizes State requirements for the purpose of RCRA 3006 and imposes no additional requirements beyond those imposed by State law. Accordingly, I certify that this action will not have a significant economic impact on a substantial number of small entities under the Regulatory Flexibility Act (5 U.S.C. 601 *et seq.*). Because this action authorizes pre-existing requirements under State law and does not impose any additional enforceable duty beyond that required by State law, it does not contain any unfunded mandate or significantly or uniquely affect small governments, as described in the Unfunded Mandates Reform Act of 1995 (Pub. L. 104–4). For the same reason, this action does not have tribal implications within the meaning of Executive Order 13175 (65 FR 67249, November 6, 2000). It does not have substantial direct effects on tribal governments, on the relationship between the Federal government and the Indian tribes, or on the distribution of power and responsibilities between the Federal government and Indian tribes, as specified in Executive Order 13175. This action will not have substantial direct effects on the States, on the relationship between the national government and the States, or on the distribution of power and responsibilities among the various levels of government, as specified in Executive Order 13132 (64 FR 43255, August 10, 1999), because it merely authorizes State requirements as part of the State RCRA hazardous waste program without altering the relationship or the distribution of power and responsibilities established by RCRA. This action also is not subject to Executive Order 13045 (62 FR 19885, April 23, 1997), because it is not economically significant and it does not make decisions based on environmental health or safety risks. This action does not include environmental justice related issues that require consideration under Executive Order 12898 (59 FR 7629, February 16, 1994).

[3] Formerly, 40 CFR 266.100(c).

[4] Formerly, 40 CFR 266.100(f).

Under RCRA 3006(b), EPA grants a state's application for authorization as long as the state meets the criteria required by RCRA. It would thus be inconsistent with applicable law for EPA, when it reviews a state authorization application, to require the use of any particular voluntary consensus standard in place of another standard that otherwise satisfies the requirements of RCRA. Thus, the requirements of section 12(d) of the National Technology Transfer and Advancement Act of 1995 (15 U.S.C. 272 note) do not apply. As required by section 3 of Executive Order 12988 (61 FR 4729, February 7, 1996), in issuing this rule, EPA has taken the necessary steps to eliminate drafting errors and ambiguity, minimize potential litigation, and provide a clear legal standard for affected conduct. EPA has complied with Executive Order 12630 (53 FR 8859, March 15, 1988) by examining the takings implications of this action in accordance with the Attorney General's Supplemental Guidelines for the Evaluation of Risk and Avoidance of Unanticipated Takings issued under the Executive Order. This action will not impose an information collection burden under the provisions of the Paperwork Reduction Act of 1995 (44 U.S.C. 3501 *et seq.*).

The Congressional Review Act, 5 U.S.C. 801 *et seq.*, as added by the Small Business Regulatory Enforcement Fairness Act of 1996, generally provides that before a rule may take effect, the agency promulgating the rule must submit a rule report, which includes a copy of the rule, to each House of the Congress and to the Comptroller General of the United States. EPA will submit a report containing this document and other required information to the U.S. Senate, the U.S. House of Representatives, and the Comptroller General of the United States prior to publication in the **Federal Register**. A major rule cannot take effect until 60 days after it is published in the **Federal Register**. This action is not a major rule as defined by 5 U.S.C. 804(2). This action will be effective September 26, 2001.

List of Subjects in 40 CFR Part 271

Environmental protection, Administrative practice and procedure, Confidential business information, Hazardous waste, Hazardous waste transportation, Indian lands, Intergovernmental relations, Penalties, Reporting and record keeping requirements.

Authority: This proposed action is issued under the authority of sections 2002(a), 3006 and 7004(b) of the Solid Waste Disposal Act as amended 42 U.S.C. 6912(a), 6926, 6974(b).

Dated: September 12, 2001.

Mike Schulz,

Acting Deputy Regional Administrator, Region 9.

[FR Doc. 01–24066 Filed 9–25–01; 8:45 am]

BILLING CODE 6560–50–P

FEDERAL COMMUNICATIONS COMMISSION

47 CFR Part 76

[CS Docket No. 00–96; FCC 01–249]

Implementation of the Satellite Home Viewer Improvement Act of 1999: Broadcast Signal Carriage Issues

AGENCY: Federal Communications Commission.

ACTION: Final rule; petitions for reconsideration.

SUMMARY: This document responds to petitions for reconsideration of certain aspects of the *Report and Order* (FCC 00–417) previously issued in this proceeding. The *Report and Order*, a summary of which is published in the **Federal Register** at 66 FR 7410 (January 23, 2001), implemented section 338 of the Communications Act of 1934, as amended by the Satellite Home Viewer Improvement Act of 1999 (''SHVIA''). Specifically, the *Report and Order* implemented regulations regarding the carriage of local television stations in markets where satellite carriers offer local television service to their subscribers. As described, the Commission, in the *Order on Reconsideration*, denies the petitions and, on its own motion, clarifies and, where necessary, amends some of the requirements set forth in the *Report and Order* and the satellite broadcast signal carriage rule, 47 CFR 76.66.

DATES: Effective October 26, 2001.

FOR FURTHER INFORMATION CONTACT: Eloise Gore or Ben Bartolome, Cable Services Bureau, (202) 418–7200, TTY (202) 418–7172, or via Internet at *egore@fcc.gov* or *bbartolo@fcc.gov*.

SUPPLEMENTARY INFORMATION: This is a summary of the Federal Communications Commission's *Order on Reconsideration*, FCC 01–249, in CS Docket No. 00–96, adopted on September 4, 2001, and released on September 5, 2001. The full text of this *Order on Reconsideration* is available for public inspection and copying during normal business hours at the FCC Reference Information Center, Portals II, Room CY–A257, 445 12th Street, SW., Washington, DC, 20554. This document may also be purchased from the Commission's duplicating contractor, Qualex International, Portals II, 445 12th Street, SW., Room CY–B402, Washington, DC, 20554, telephone (202) 863–2893, facsimile (202) 863–2898, or via e-mail at *qualexint@aol.com*. The full text may also be reviewed and downloaded from the FCC Cable Services Bureau's website at *http://www.fcc.gov/csb/*. Alternative formats are available to persons with disabilities by contacting Martha Contee at (202) 418–0260 or TTY (202) 418–2555.

Synopsis of the Order on Reconsideration

I. Introduction

1. The *Order on Reconsideration* addresses eight distinct issues raised in two petitions for reconsideration of the Commission's *Report and Order* in *Implementation of the Satellite Home Viewer Improvement Act of 1999: Broadcast Signal Carriage Issues; Retransmission Consent Issues*, which implements section 338 of the Communications Act of 1934 (the ''Act''), as amended by the Satellite Home Viewer Improvement Act of 1999 (''SHVIA''). The *Report and Order* adopted broadcast signal carriage requirements for satellite carriers in order to implement section 338 of the Act. Section 338 requires satellite carriers, by January 1, 2002, to carry upon request all local television broadcast stations' signals in local markets in which the satellite carriers carry at least one television broadcast station signal pursuant to the statutory copyright license, subject to the other carriage provisions contained in the Act. As noted in the *Report and Order*, this transition period is intended to provide the satellite industry with time to begin providing local television signals into local markets, otherwise known as ''local-into-local'' satellite service. The Commission's carriage rules in many respects mirror the broadcast signal carriage rules applicable to cable operators, but with key distinctions made in recognition of the statutory and practical constraints that result from differences in satellite and cable technologies.

2. DIRECTV, Inc. (''DIRECTV'') and the Association of Local Television Stations, Inc. (''ALTV'') separately filed petitions for reconsideration of the *Report and Order*, raising different issues. Several parties separately filed oppositions or comments in response to DIRECTV's petition: ALTV; National Association of Broadcasters (''NAB''); Network Affiliated Stations Alliance (''NASA''); Paxson Communications

Corporation (''Paxson''); and a joint opposition by the Association of America's Public Television Stations, the Public Broadcasting Service, and the Corporation for Public Broadcasting (collectively ''Public Television Stations''). DIRECTV, in turn, filed a reply. In response to ALTV's petition, DIRECTV filed an opposition and NAB submitted comments in support. Both ALTV and NAB filed separate replies to DIRECTV's opposition.

3. Our response to the petitions are governed by the Communications Act and our own rules. Reconsideration of a Commission decision is warranted only if the petitioner cites a material error of fact or law, or presents additional facts and circumstances which raise substantial or material questions of fact that were not considered and that otherwise warrant Commission review of its prior action. The Commission will not reconsider arguments that have already been considered. For the reasons stated herein, we affirm our decisions in the *Report and Order* and deny both DIRECTV's and ALTV's petition. We also take this opportunity to clarify and, where necessary, amend some of the requirements set forth in the *Report and Order* and the rule.

II. Order on Reconsideration

4. As explained below, after careful consideration of all the arguments and facts presented, we decline to revise the satellite broadcast signal carriage requirements adopted in the *Report and Order*, except to provide additional clarification to some of those rules. Consistent with the requirements of the SHVIA, the Commission's satellite broadcast signal carriage rules generally attempt to place satellite carriers on an equal footing with cable operators regarding the provision of local broadcast programming, in order to give consumers more competitive options in selecting a multichannel video program distributor (''MVPD''). In the legislative history to section 338, Congress made clear that ''[t]he procedural provisions applicable to section 338 (concerning costs, avoidance of duplication, channel positioning, compensation for carriage, and complaints by broadcast stations) are generally parallel to those applicable to cable systems.'' As the legislative history of the SHVIA indicates, Congress was concerned that, ''without must carry obligations, satellite carriers would simply choose to carry only certain stations which would effectively prevent many other local broadcasters from reaching potential viewers in their service areas.'' Our satellite carriage rules also reflect Congress's desire to provide satellite subscribers with local television service in as many markets as possible, but also take into account, to the extent possible, the inherent nature of satellite technology and constraints on the use of satellite spectrum in the delivery of must carry signals. Against this backdrop, we address the six issues raised by DIRECTV in its petition, then the two issues raised by ALTV in its petition, and, on our own motion, provide clarification and amendment to several of the rules governing procedures consistent with the legislative intent of section 338(g).

A. DIRECTV's Petition

1. Carriage of Local NCE Stations

5. The Commission denies DIRECTV's request that the Commission modify its noncommercial educational (''NCE'') carriage rule by limiting a satellite carrier's carriage obligation to only one qualified NCE station per designated market area (''DMA''), with additional NCE stations carried on a voluntary basis. We affirm the current rule requiring satellite carriers to carry all non-duplicative NCE stations in markets where they provide local-into-local service. Contrary to DIRECTV's contention, the Commission's rule is consistent with the plain language of section 338(c)(2) as it requires, ''[t]o the extent possible, * * * the same degree of carriage by satellite carriers * * * as is provided by cable systems.'' It also promotes parity between DBS and cable by assuring that consumers receive via satellite essentially the same local channels they would receive if they subscribed to cable.

6. Contrary to DIRECTV's assertion, the standard we developed for the NCE carriage obligation also took into consideration the technical limitations, as well as the national character, of satellite systems, in addition to other factors that differentiate the satellite industry from the cable industry. Under our rules, a cable system with more than 36 channels must carry all of the first three local NCEs in its market, even when the stations transmit substantially the same programming at the same time. The limitation on mandatory carriage of NCEs that duplicate only applies to additional NCEs when there are more than three local NCEs in the cable system's market. Satellite carriers, on the other hand, need not carry any simultaneously duplicative signals. Satellite carriers are required to carry up to three local NCEs that do not duplicate programming—with duplication defined as more than 50 percent of prime time programming and more than 50 percent of programming outside of prime time broadcast on a simultaneous basis. Once the carrier provides three local noncommercial stations, the duplication test becomes the same as for cable—whether more than 50 percent of prime time programming and more than 50 percent of programming outside of prime time is duplicative on a simultaneous or non-simultaneous basis. Given this standard, our rule does address the capacity concerns that DIRECTV raises because the foregoing standard prevents satellite capacity from being wasted on repetitive programming while ensuring carriage of nonduplicating, diverse public stations that respond to the different audiences and distinct needs of each community. In this regard, we agree with Public Television Stations and Paxson that the NCE carriage formulation proposed by DIRECTV (*i.e.*, that we require satellite carriers to carry only one qualified NCE station per DMA, with additional NCE stations carried on a voluntary basis) would deprive satellite subscribers of access to local noncommercial television stations in those markets where local-into-local is offered.

2. Public Interest Set-Aside

7. In 1998, the Commission, in *Implementation of Section 25 of the Cable Television Consumer Protection and Competition Act of 1992, Direct Broadcast Satellite Public Interest Obligations* (''*DBS Public Interest Report and Order*''), adopted rules implementing section 335 of the Act, as amended by the Cable Television Consumer Protection Act of 1992 (''1992 Cable Act''). The rules require DBS providers to reserve four percent (4%) of their channel capacity exclusively for use by qualified programmers for noncommercial programming of an educational or informational nature. DIRECTV, in its petition, asks the Commission to permit satellite carriers to include NCE stations in the calculation of public interest programming required to be set aside by satellite carriers under section 335 of the Act. DIRECTV argues that Congress knew of the existence of section 335 in crafting the satellite must carry regime of section 338, and that ''nothing in the text of this latter provision suggests that NCE stations should not be counted towards the 4% set-aside.''

8. The Commission denies DIRECTV's request for reconsideration of this issue. We find that DIRECTV's request that we permit satellite carriers to include local NCE stations, carried pursuant to section 338, in the calculation of public interest programming required to be set aside under section 335 would not result in compliance with section 335 because carriage of certain stations in a

limited number of markets does not provide the national scope intended by section 335. Section 338 is not a national but rather a market-by-market requirement. Significantly, the public interest set-aside requirement under the 1992 Cable Act focuses on educational or informational public interest programming available to all subscribers nationally. SHVIA, in contrast, is intended to provide satellite subscribers with their local noncommercial educational stations. Allowing satellite carriers to count towards the national set aside individual local NCE stations provided only in their respective local markets would violate section 335's requirement that a direct broadcast satellite service meet the set aside requirement ''by making channel capacity available to *national* educational programming suppliers.'' (emphasis added). In applying this requirement, we have made it clear that eligible public interest programming must therefore be available to all subscribers. We also note that DIRECTV is seeking reconsideration of an issue that has already been addressed in the *Report and Order*, and that DIRECTV has not presented any new arguments that would warrant reconsideration of this issue.

9. Alternatively, DIRECTV, in its petition, states that, ''[a]t a minimum, the Commission should clarify that NCE stations that are distributed on a national basis should be included in the 4% DBS public interest set-aside calculation.'' We note that the Commission has generally addressed DIRECTV's alternative request for clarification (on the issue of whether, in the abstract, a local NCE station can be counted as a programmer for section 335 purposes) in the *DBS Public Interest Report and Order* (concluding ''that we should interpret the term 'national' broadly so as to include local, regional, or national domestic nonprofit entities that qualify under the definitions listed above and produce noncommercial programming designed for a national audience'')), but we decline at this point to go beyond what we said in the *DBS Public Interest Report and Order* about this matter without having a concrete set of facts before us.

3. Programming in the Vertical Blanking Interval

10. In its petition, DIRECTV contends that carriage of ''additional'' VBI material is not ''technically feasible'' for existing, deployed satellite systems. It states that, ''[a]part from primary video and audio signals and Line 21 closed caption transmissions, it is not technically feasible for DIRECTV's DBS system to reliably pass through additional material in a usable form from other portions of the VBI.'' It asserts that the Commission's requirement on this issue ''could require the replacement of DIRECTV equipment for as many as ten million households, resulting in a cost of more than 2.8 billion dollars.'' DIRECTV asks the Commission to reconsider its findings with respect to the ability of existing satellite carriers to carry additional VBI material, ''at least insofar as it applies to satellite systems that are already in operation.'' The broadcast interests generally agree that DIRECTV should not have to replace all the set-top boxes currently being used by subscribers if it is technically infeasible or prohibitively expensive for DIRECTV to do so, but they maintain that DIRECTV should be required to comply with the VBI carriage requirement on a going-forward basis.

11. Section 338(g) of the Act states that, ''[t]he regulations prescribed [under section 338] shall include requirements on satellite carriers that are comparable to the requirements on cable operators under [s]ections 614(b)(3) * * * and 615(g)(1).'' Section 614(b)(3) states that, ''[a] cable operator shall carry in its entirety * * * the primary video, accompanying audio, and line 21 closed caption transmission of each of the local commercial television stations carried on the cable system and, to the extent technically feasible, program-related material carried in the vertical blanking interval or on subcarriers.'' Section 615(g)(1) applies a similar requirement to the contents of noncommercial educational stations. In the cable context, with regard to the ''technical feasibility'' of the carriage of program-related material in the VBI or on subcarriers, the Commission stated in *Implementation of the Cable Television Consumer Protection and Competition Act of 1992: Broadcast Signal Carriage Issues* (''*Cable Must Carry Report and Order*'') that such carriage should be considered ''technically feasible'' if only nominal costs, additions or changes of equipment are necessary in order to carry such material. In the *Report and Order* the Commission expressed its view that, based on the record presented, it was technically feasible for satellite carriers to carry the program-related material currently carried in a television station's VBI. The *Report and Order* declined to rule on new kinds of program-related data in the VBI or on subcarriers indicating that these issues would be addressed in the future on a case-by-case basis. DIRECTV's petition addresses the carriage of such additional VBI material and does not dispute the feasibility of carrying the data in line 21. We conclude, for the reasons set forth, that it is unnecessary to revise the rule requiring satellite carriers to carry in its entirety the primary video, accompanying audio, and closed-caption data contained in line 21 of the VBI and, to the extent technically feasible, program-related material carried in the VBI or on subcarriers.

12. We find no reason to reconsider these decisions since it was not the Commission's intention to require satellite carriers to carry program-related material in the VBI if it is not ''technically feasible'' for satellite carriers to do so. DIRECTV indicates that its system is able to carry line 21 closed captioning, closed text, XDS, V-chip information, ''TSID'' data and extended service packets on line 21. Neither DIRECTV nor the broadcast parties commenting on this issue have been specific as to what additional information that, if made the subject of a carriage request, would be jeopardized by the current system limitations described by DIRECTV. In these circumstances, we believe it is generally appropriate to apply the ''technically feasible'' standard as previously articulated in the cable context, but that it is not appropriate to attempt to rule on any additional or future VBI service without more specific information. We note, however, that most of the costs that DIRECTV claims it would have to bear as the consequence of any additional carriage obligation, totaling some $2.8 billion, relate to replacing the integrated receiver/decoders that are currently used to receive DIRECTV service. In the future, any claim of technical infeasibility should address separately the technical issues involved with the transmission of the material in question as opposed to its reception and management in the receiver/decoder and the extent to which each set of issues is under the control of the satellite provider.

13. On a different, but related point, DIRECTV argues that satellite carriers should not be required to carry programming material of a ''must carry'' station if inclusion of such type of material is not covered by the retransmission consent agreements reached by that carrier with other stations in the local market in question. We find no authority in section 338, and DIRECTV has not presented any, to support DIRECTV's request. The terms negotiated by retransmission consent stations for the carriage of program-related material cannot be used to undermine Congress's directive that the

Commission adopt satellite carriage requirements that are comparable to the cable carriage requirements, which explicitly mandate the carriage of program-related material. We therefore reject DIRECTV's request that we establish separate VBI requirements for must carry and retransmission consent stations.

4. Good Quality Signal Standard

14. Section 338(b)(1) of the Act requires a television broadcast station asserting its right to carriage to bear the costs associated with delivering a ''good quality signal'' to the satellite carrier's receive facility. In the cable context, Congress defined a signal strength standard that would equate to a good quality signal. In the satellite context, however, Congress did not define specific signal levels that local stations must deliver to satellite carriers, and apparently left that determination to the Commission. In determining what constitutes a ''good quality signal,'' as that term is used in section 338, the Commission, in the *Report and Order,* found that the signal quality parameters under section 614 of the Act and section 76.55 of the Commission's cable regulations were appropriate in the satellite carriage context. The Commission noted that, under the current cable carriage regime, television broadcast stations must deliver either a signal level of −45dBm for UHF signals or −49dBm for VHF signals at the input terminals of the signal processing equipment, to be considered eligible for carriage. The Commission determined that application of the same standard to the satellite carriage context was appropriate, given that the standards that have been applied to cable operators ''have functioned well since the inception of the statutory carriage requirements seven years ago.'' Additionally, the Commission did not find evidence in the record to suggest that the cable signal quality standard will not prove equally satisfactory in the satellite context. In providing a good quality signal, the Commission concluded that television stations may use any delivery method (*e.g.,* microwave transmission, fiber optic cable, or telephone lines) to improve the quality of their signals to the satellite carrier as long as they pay for the costs of such delivery mechanisms.

15. In its petition for reconsideration, DIRECTV asks the Commission to change its signal quality standard and ''compel any station seeking carriage to provide a signal that meets the requirements of GR–388 CORE, TV1 for <20 route miles.'' DIRECTV asserts that the cable standard the Commission adopted will not allow satellite carriers to make efficient use of their allocated bandwidth and that it will increase the likelihood of signal degradation. It argues that the adoption of the cable signal quality standard in the satellite context is based on ''unsupported speculation that a higher standard may prove ''prohibitively expensive'' for small television stations to meet.'' DIRECTV also argues that there are no statutory limits on broadcasters' costs for providing a good quality signal. Furthermore, DIRECTV insists that the record contained ''ample evidence'' that satellite carriers must receive a TV–1 quality signal. According to DIRECTV, requiring a TV–1 quality signal is ''critical'' to differentiating DBS from cable television. DIRECTV maintains that it markets its services on the basis of providing a higher quality signal than cable, and that, without having a higher standard for what constitutes a good quality signal in the satellite context, its marketing advantage will be severely undercut. DIRECTV asserts that the use of compression systems based on the Moving Pictures Experts Group (''MPEG–2'') standard requires signals that meet the requirements of GR–338 CORE, TV1 for <20 route miles. It further asserts that all of the local stations that are currently carried by DIRECTV meet the TV–1 quality standard and are delivered to DIRECTV's local receive facilities using a dedicated fiber circuit. DIRECTV insists that any station seeking carriage should be required to meet the same standard, thus ensuring a ''good quality'' satellite signal.

16. The Commission declines to revise the ''good quality signal'' standard adopted in the *Report in the Order*, as urged by DIRECTV. As noted by ALTV and Paxson, DIRECTV made the same request in its initial comments in the proceeding which the Commission reviewed and rejected. As reflected in the *Report and Order,* the Commission has already considered DIRECTV's request that the Commission define ''good quality signal'' as one that will facilitate efficient MPEG compression of all channels, and that the signal must meet the requirements of GR–388 CORE, TV1 for <20 route miles. The Commission, however, declined to adopt DIRECTV's good quality signal proposals for the following reasons:

> First, we believe that the TV1 standard is too rigid a construct. Specifically, a signal-to-noise ratio of +67 dB cannot be easily implemented by most television broadcast stations. Broadcasters do not have to meet such exacting ratios and levels when delivering signals to a cable operator's headend to qualify for carriage. Moreover, as NAB points out, satellite carriers, such as EchoStar, have been retransmitting local television signals that they have received over-the-air * * *. We also note that it would be prohibitively expensive for a small television station to lease a dedicated TV1 circuit from a telecommunications carrier. It is not our intention to impose inordinate costs on small television stations that would prevent them from being carried by a satellite carrier.

17. In reviewing DIRECTV's petition, we find that DIRECTV has not presented new evidence that warrants changing the good quality signal standard already adopted to a TV–1 quality signal, which NAB and ALTV refer to as an ''essentially perfect signal.'' DIRECTV, in an ex parte letter, suggests that ''a number of'' TV stations ''can come close'' to achieving a 67 dB S/N ratio. By ''coming close,'' DIRECTV means a S/N ratio of ''approximately 60 dB,'' and says that even achieving that S/N ratio with an over-the-air signal will, in many cases, require the purchase of additional noise reduction equipment. While lower than the 67 dB S/N ratio that DIRECTV initially requested, we agree with NAB and ALTV that ''a 60 dB signal-to-noise [ratio] would still force stations to deliver to DBS firms a virtually perfect signal, rather than the good quality signal that the SHVIA requires stations to provide to satellite carriers and that the Cable Act requires stations to provide to cable systems (including cable systems that provide digital service).'' Moreover, we note that DIRECTV proposes requiring a S/N ratio of 60 dB but does not clarify what signal strength level would satisfy the ''strong, high quality broadcast signal'' or whether the intention is to combine the −49dBm for VHF signals and −45dBm for UHF signals with a 60 dB S/N ratio. Additionally, DIRECTV does not define the ''as-received'' S/N ratio that a broadcast station must deliver, but rather proposes that stations must achieve the desired 60 dB S/N through use of noise reduction equipment. Furthermore, DIRECTV acknowledges that stations with ''weaker off-air signals at the local receive facility may not be able to meet the TV–1 (or 60 dB) standard via off-air transmission'' and recommends that broadcasters can pay $14,000 per year to lease a TV–1 line to accommodate the standard proposed. As the Commission previously stated, however, ''[i]t is not our intention to impose inordinate costs on small television stations that would prevent them from being carried by a satellite carrier.''

18. With respect to DIRECTV's claims about the potential for diminished

capacity under the current good quality signal standard, we are unable to make a meaningful evaluation of this claim based on the record. DIRECTV, in its June 25, 2001 Ex Parte Letter, explains that if each video frame is similar to the next, then only ''a small amount of ''difference'' information is required for the second frame'' and states that ''noise is the enemy of compression.'' DIRECTV further explains that, in a compression system, it is difficult to differentiate between intended activity and undesirable background noise. It states that such excessive background noise will ''consume valuable transmission capacity thus causing the desired picture to be degraded.'' On this point, we note that DIRECTV, however, did not establish the amount of picture degradation that could result. DIRECTV asserts that tests conducted in its lab ''show that one channel with a 50 dB weighted signal-to-noise ratio will consume 25% more bandwidth than the same program with a 67 dB signal-to-noise ratio.'' DIRECTV, however, did not submit information as to how these tests were conducted and how capacity would be affected if we retain the signal strength standard established in the *Report and Order* versus adopting its proposed 60 dB S/N standard. Further, we see merit in NAB's and ALTV's response on this issue that a ''DBS firm can set a cap on the number of bits that will be allocated to any one channel, thus ensuring that there will be no effect on any other channel through the statistical multiplexing process.''

19. Although DIRECTV clarifies, in its reply, that microwave transmissions may be used in lieu of fiber optic cable to achieve a TV–1 quality signal, it appears to expect that microwave spectrum is available everywhere. Moreover, DIRECTV provided no standard or cost analysis for such an alternative.

20. DIRECTV has not provided sufficient evidence to demonstrate that the good quality signal standard used in the cable context is inadequate or inappropriate in the satellite context. As NAB and ALTV point out, ''many cable systems (like DBS firms) now provide digital service, but that has *not* resulted in any change in the quality of the signal that stations are required to provide to cable headends. As before, stations are still required to provide cable systems with a ''good quality,'' but not a flawless, signal to cable systems.'' The good quality signal standard—in either the cable or satellite context—ensures that a signal available to over-the-air viewers will receive carriage. We continue to believe that the standard used for cable is appropriate in the satellite context as well. The signal standard must be one that can be measured and can be satisfied by over-the-air delivery. We believe that the goal of preserving over-the-air local television, which underlies the carriage requirements in the Communications Act, would be disserved by a signal quality standard that cannot be satisfied by over-the-air delivery. Furthermore, as indicated in the *Report and Order,* the Commission was compelled to reject the TV–1 standard because, among other reasons, many television broadcast stations would have difficulty implementing the standard. We believe that imposing an exacting standard that exceeds the level necessary would inhibit many local stations' ability to qualify for carriage with a satellite carrier, when the same stations can qualify for carriage with a cable operator. If we adopted DIRECTV's proposal to require broadcasters to meet a 60 dB signal-to-noise ratio, we would be creating disparate schemes for satellite and cable. Moreover, to the extent that cable operators have upgraded their systems and equipment since the 1992 Cable Act, they have been bearing the costs of improving some broadcasters' signal quality to meet the cable system's higher standards and subscribers' higher expectations. Because the good quality signal standard is statutory for cable systems, we cannot revise it. Creating such a disparity for cable versus satellite subscribers, as well as for broadcast stations, is not what Congress contemplated in section 338.

5. Relocation of Local Receive Facilities Mid-Cycle

21. In the *Report and Order,* the Commission concluded that, as a general matter, a satellite carrier may relocate the designated local receive facility at the beginning of an election cycle (*i.e.,* at the time broadcast stations must elect either must carry or retransmission consent). The Commission stated that satellite carriers should have the flexibility to change their designated local receive facility or alternative facility, and required satellite carriers to provide 60 days advance notice to all local stations of such a change. In affording satellite carriers this flexibility, however, the Commission was concerned that the relocation of a local receive facility, if done mid-cycle, may make it more difficult for some television stations to pay the unanticipated costs of delivering a good quality signal. Accordingly, the Commission determined that if a satellite carrier decides to relocate its local receive facility in the middle of an election cycle (*i.e.,* after the time for electing must carry or retransmission consent during an election cycle has expired), it should pay the television stations' costs to deliver a good quality signal to the new location. In its petition, DIRECTV seeks reconsideration of this issue, contending that the costs of delivering a good quality signal in the context of the relocation of local receive facilities mid-cycle by satellite carriers should be borne by broadcasters, not satellite carriers.

22. The Commission denies DIRECTV's request for reconsideration of this issue. The Commission's prior interpretation of the statute is reasonable and consistent with the purpose of the SHVIA. It is within the Commission's discretion to interpret ''designated'' facility, as that term appears in section 338(b), as the facility for which the carrier gives a station notice before the station makes its carriage election. The carrier thus cannot change the ''designated'' facility to which the broadcaster can be held responsible for delivering its good quality signal until it comes time to make a carriage election for the next election cycle. If the satellite carrier, however, does make such a change mid-cycle, even as a result of unforeseen events, it is only reasonable to require it to bear any new capital costs and incremental ongoing expenses required for the delivery of a good quality broadcast signal, because the new receive facility was not the one initially ''designated'' and anticipated by local stations. We agree with Public Television Stations that this limited burden on carriers protects a broadcast station's reasonable expectations of the signal delivery costs it will incur if it elects satellite carriage.

6. Extra Equipment for Some Local Signals

23. In the *Report and Order,* the Commission interpreted the nondiscrimination provision of section 338(d) of the Act to prohibit satellite carriers from requiring subscribers to purchase additional equipment (*e.g.,* a satellite dish) to gain access only to some, but not all of the local signals in a market. This determination was made in response to concerns over the possible discriminatory treatment that television stations electing mandatory carriage might receive; that is, a concern that a satellite carrier may place mandatory carriage stations on a satellite that would require a subscriber to purchase another dish and/or other equipment to receive such signals, which would effectively inhibit the

ability of local stations to reach potential viewers. In addressing this issue, the Commission found that ''the language of [s]ection 338(d) covers the additional equipment concerns raised by the parties and bars satellite carriers from requiring subscribers to purchase additional equipment when television stations from one market are segregated and carried on separate satellites.'' As the Commission explained, this interpretation does not prohibit a satellite carrier from requiring a subscriber to pay for additional equipment in order to receive all television stations from a single market. To illustrate the application of the rule, the Commission noted: ''For example, DIRECTV may require an additional dish to receive all television stations from the Baltimore market, but it may not require subscribers to purchase the same to receive some Baltimore stations where the others are available using existing equipment.''

24. In its petition, DIRECTV asks the Commission to reconsider its interpretation of the nondiscrimination provision of section 338(d) of the Act, contending that section 338(d) does not unduly restrict satellite carriers from offering local-into-local service through the use of different orbital positions, with multiple dishes if necessary. DIRECTV further asserts that Congress considered this precise question and decided to delete draft statutory language that would have imposed the very restriction that the Commission found in the statute.

25. The Commission declines to reconsider this issue. DIRECTV's arguments were squarely before us when we made our determination that section 338(d)'s nondiscrimination provision bars satellite carriers from discriminating against some broadcast stations by requiring subscribers to purchase additional receiving equipment in order to access some, but not all, local signals. DIRECTV has not presented any new facts or arguments to convince us to change our interpretation of section 338(d) as it concerns this issue. Indeed, as reflected in the *Report and Order,* the Commission considered the very same line of legislative argument that DIRECTV now makes, which EchoStar previously made:

> EchoStar comments that one of the obligations advocated by the NAB—that local stations be available from the same orbital location—is tantamount to a provision that had been included in draft legislation prior to the passage of SHVIA. EchoStar states that such provision, which was dropped from the final version of [s]ection 338, would have barred satellite carriers from transmitting local stations in a manner that would require additional reception equipment. EchoStar argues that the Commission cannot implement a rule similar to this provision when Congress decided not to include such a requirement in the SHVIA.

In response, the Commission held ''that the language of [s]ection 338(d) covers the additional equipment concerns raised by the parties and bars satellite carriers from requiring subscribers to purchase additional equipment when television stations from one market are segregated and carried on separate satellites.'' The Commission's rule on this issue is intended to prohibit satellite carriers from placing mandatory carriage television stations on a satellite if that would require a subscriber to purchase equipment additional to what is needed to receive other local stations in the same market, and, at the same time, placing retransmission consent stations on another satellite that does not require subscribers to purchase any additional equipment.

26. We agree with Public Television Stations that DIRECTV, in any event, misinterprets the legislative history of SHVIA in arguing that it should be permitted to require subscribers to use two separate dishes to receive the full package of local channels. When Congress adopted the SHVIA, it rejected language that said subscribers could not be required to install an additional dish to receive any local signals. The legislative drafting change cited by DIRECTV involved a deletion of a much broader limitation on satellite carriers than what the Commission adopted under the general anti-discrimination language that survived. The legislative drafting change, at most, indicated that Congress did not want to prohibit satellite carriers from requiring additional dishes generally, but the change does not imply that Congress wanted to allow satellite carriers to require additional dishes if such a requirement created discriminatory effects. We believe that a limited prohibition on requiring subscribers to obtain a separate dish to receive some local signals when other local signals are available without the separate dish is necessary to give full effect to local station carriage requirements. Otherwise, as Public Television Stations argue, satellite carriers could structure local station packages and separate dish requirements to discourage consumers from subscribing to certain local stations, including local noncommercial stations. For the foregoing reasons, we affirm our rule prohibiting satellite carriers from requiring subscribers to purchase additional equipment to gain access only to some, but not all of the local signals in a market.

B. ALTV's Petition

1. A La Carte Sales of Local Signals

27. In the *Report and Order*, the Commission held that section 338 does not require satellite carriers to sell all local television stations as one package to subscribers, as broadcast interests had urged in their comments. The Commission found that Congress did not intend to establish a basic service tier-type requirement for satellite carriers when it implemented section 338, and that Congress did not explicitly prohibit the sale of local television station signals on an a la carte basis. The Commission determined that, instead, section 338's anti-discrimination language prohibits satellite carriers from implementing pricing schemes that effectively deter subscribers from purchasing some, but not all, local television station signals. Thus, the Commission stated, ''a satellite carrier must offer local television signals, as a package or a la carte, at comparable rates.''

28. ALTV seeks reconsideration of this issue. NAB, NASA, Paxson, and Public Television Stations submitted arguments, similar to those that ALTV makes, in support of reconsideration. ALTV and other parties contend that the Commission's decision to allow a la carte pricing of local stations could result in discrimination against local stations and run counter to the SHVIA's anti-discrimination requirements. They ask the Commission to require all local signals to be included in a single package in order to ensure that consumers have access to all local stations. ALTV insists that this change to the Commission's rule is needed because of its concern that a satellite carrier, through its packaging and pricing decision, could influence the availability of, and access to, local channels. NAB states that ''allowing satellite carriers to adopt differential pricing policies for 'favored' and 'disfavored' local channels directly contravenes the statutory prohibition on discriminatory pricing.'' Further, NAB asserts that authorizing a la carte pricing for local stations ''would allow satellite carriers to demote some local stations to second-class status in a manner that cable systems could never dream of—namely, selling a handful of stations in a market as a package, while offering the smaller stations in the market only on an a la carte basis, which predictably will be purchased by far fewer subscribers.''

29. The Commission denies ALTV's request for reconsideration of this issue. As reflected in the *Report and Order*, the Commission considered and rejected

the precise argument that ALTV is asking us to reconsider. Neither ALTV nor the parties that support ALTV on this issue has submitted new arguments or facts to warrant reconsideration of our decision that satellite carriers should not be required to offer local stations only as a single package. We find nothing in the statute that prohibits satellite carriers from offering local stations on an individual a la carte basis to the extent the carrier is not using this method of packaging to discriminate against local stations. As DIRECTV points out, and we agree, Congress could have created a requirement that satellite carriers must sell local stations to its subscribers as a single package, but it did not do so. The relevant part of section 338 requires only that a satellite carrier provide access to a local television station's signal ''at a nondiscriminatory price'' and access ''in a nondiscriminatory manner on any navigational device, on-screen program guide, or menu.'' Neither of these requirements prohibits satellite carriers from offering local television signals to consumers on an a la carte basis, and we believe that allowing a satellite carrier the flexibility to offer local television station signals to its subscribers on an a la carte basis promotes consumer choice.

30. ALTV faults our decision to implement the statutory prohibition on discriminatory pricing by requiring that satellite carriers offer broadcast stations at ''comparable rates.'' ALTV argues that the discriminatory pricing prohibition must translate to a prohibition of a la carte offerings and a requirement for a single package of local signals. We used the term ''comparable'' in the *Report and Order* to explain that ''non-discriminatory'' need not mean identical. That is, although the charges need not be the same, they should be within a nondiscriminatory range. The pricing should be based on relevant economic factors applied in a nondiscriminatory fashion that does not result in discriminatory treatment of any station or stations, such as pricing so as to effectively deter subscribers from purchasing some, but not all, local television station signals. We recognize that comparable pricing may require further clarification on a case-by-case basis, and that in most cases local stations should be offered to subscribers at the same or nearly identical prices. We are, however, unwilling at this time to require identical pricing for each local station carried and will evaluate on a case-by-case basis any complaints alleging discrimination prohibited by section 338.

31. We clarify here that although the statute does not prohibit satellite carriers from offering stations on an a la carte basis at comparable rates, we believe that a prohibited discriminatory effect would result if carriers created a mix of one or more packages for some stations while offering other stations only individually (*e.g.,* creating a package of six local stations and offering other local stations only on an individual a la carte basis, or creating two separate packages of different local stations). Allowing satellite carriers to offer some stations as a package and others on an a la carte basis could operate as a deterrent to the purchase of certain local stations without furthering consumer choice. We believe that this is one of the very discriminatory results that section 338 sought to prohibit. In contrast, we do not believe it would be discriminatory for a satellite carrier to offer either each local station individually or a package containing all local stations for a price less than or equal to the sum of subscribing to each station individually (*e.g.,* each of twelve local stations for $1 *or* all twelve stations for $10). Thus, if subscribers choose to forego a package of local stations that a satellite carrier is offering and instead subscribe, for example, to only three of the twelve stations that may be offered on an a la carte basis, that is an exercise of consumer choice. At the same time, other subscribers may choose to select a package that may be cheaper than the sum of individual stations.

2. Station Eligibility To Vote on Alternative Receive Facility

32. Section 338(b)(1) of the Act requires a television station asserting its ''right to carriage'' under section 338(a) to bear the costs associated with the delivery of a good quality signal to the satellite carrier's designated local receive facility or to ''another facility that is acceptable to at least one-half the stations asserting the right to carriage in the local market.'' In the *Report and Order*, the Commission interpreted the phrase ''that is acceptable to at least one-half the stations asserting the right to carriage in the local market'' to mean that a satellite carrier may establish an alternative receive facility if ''50% or more'' of those stations in a particular market consent to such a site. The Commission determined that calculation of the ''50% or more'' stations should be based on the majority of stations entitled to carriage in each affected market. The Commission reasoned: ''Since the 'right to carriage' under [s]ection 338 extends, at least initially, to all local television broadcasters, the calculation includes *all stations*, whether they elect mandatory carriage or retransmission consent.''

33. ALTV asks the Commission to revise its rule concerning this issue. ALTV contends that the calculation of the 50% threshold should be based on the number of local stations actually electing mandatory carriage, and that it should not include those stations that elect to proceed via retransmission consent. ALTV asserts that, if stations that elect retransmission consent are allowed to approve an alternative receive facility, ''stations 'asserting their right' to be carried under the signal carriage rules will be harmed,'' because of the costs associated with having to transport their signals to a distant location.

34. We decline to revise our rule on this issue. As an initial observation, we note that the Commission already has considered and rejected similar arguments voiced in the initial rulemaking. In the *Report and Order*, the Commission stated:

> We disagree * * * with ALTV, which asserts that a non-local receive facility may be established if half the local stations electing mandatory carriage, rather than retransmission consent, agree to the alternate site. Just as we decide that a satellite carrier should include both retransmission consent and mandatory carriage local stations on the same designated local receive facility, we do not distinguish between retransmission consent and mandatory carriage in the determination of an acceptable alternative receive facility * * *. All stations ''asserting a right to carriage,'' either through retransmission consent or mandatory carriage, may participate in the consideration of whether an alternative receive facility is acceptable.

35. We recognize that ALTV wishes to ensure that stations electing retransmission consent are not permitted to vote in an election process that ALTV views as a protection only for must carry stations. We disagree, however, that this is the only or the best reading of the statute. The relevant language in section 338(b)(1) (''asserting the right to carriage'') is not the same as the language in section 338(a)(1), which requires carriage of those local stations that ''request'' carriage. Nothing in this language suggests that a station seeking to participate in the selection of an alternative reception site in order to determine its rights under the law could not assert that it has a right to carriage in a market but thereafter opt to be carried pursuant to retransmission consent. In this, as in many other areas, asserting the existence of a right need not be the same as proceeding to exercise that right. As the process

contemplated by the statue commences (and as it plays out in subsequent years) there is a set of stations that can assert a right to carriage consisting basically of all stations in the market. As the process proceeds, this group of stations is divided through the carriage election process into stations that request carriage and those that proceed under the retransmission consent provisions of the law. The assertion of the right and the request for carriage pursuant to that right are separate acts. Moreover, since the location of the receive facility may inform the station's decision to elect must carry or retransmission consent (*e.g.,* if the receive site is in a location to which the station is confident of delivering a good quality signal, it may encourage a mandatory carriage election), a logical reading of the phrase in section 338(b)(1) of ''asserting the right to carriage'' would permit a vote by all must carry eligibles (including those ultimately choosing retransmission consent at the election for the upcoming cycle) prior to the election. In addition, since a station's status as a ''must carry'' or ''retransmission consent'' station may change from election cycle to election cycle, and since there may be only one opportunity to vote on the alternative receive facility, the best reading of the phrase ''asserting the right to carriage'' would cover those stations asserting that they have such a right at the vote, which they may then exercise at the upcoming election cycle, or in future election cycles.

36. We note also that there are practical problems associated with the ALTV suggested rule. It is not known at the inception of the satellite broadcast carriage requirements, when or even if satellite carriers will attempt to use alternative receive facilities. If a satellite carrier proposes an alternative receive facility after the local stations in the affected market have submitted their carriage elections but before the carriage cycle commences (*e.g.,* between July 1 and December 31, 2001), it could be possible to identify stations that have elected mandatory carriage and that satellite carriers have agreed to carry. However, if the alternative receive facility is proposed at any other time, it is not possible to identify which stations have requested mandatory carriage for the relevant cycle. We believe the statute neither contemplates nor dictates station eligibility requirements that vary according to the timing of the satellite carrier's proposal of an alternative receive facility. We believe the statute provides us with the flexibility to adopt rules that will best address the factual circumstances we anticipate and, if warranted, to amend these rules if actions and events in practice prove otherwise.

C. Issues for Clarification

37. Below, we clarify and modify several requirements adopted in the *Report and Order*. We take these actions partly *sua sponte* and partly in response to informal telephonic requests for clarification of our rules from the public.

1. Refusals To Carry

38. The *Report and Order* implemented the terms of section 338 with respect to bases for refusing a local broadcast station's request for mandatory carriage. To the extent the statutory language in section 338 is similar to the language of section 614, we patterned the rules for satellite carriers on the cable must carry rules. Where possible, we endeavored to leave the details of compliance to the affected parties and the marketplace. We expected that the parties would act reasonably and not refuse carriage without a good-faith basis for doing so. As the parties have commenced acting on the carriage procedures set forth in the rules, however, we have seen indications that more specific instruction and parameters may be necessary. We take the opportunity afforded by this *Order on Reconsideration* to clarify our intent and expectations more fully. We continue to hope that specific rule amendments will not be necessary.

39. The rules we adopted to implement section 338 govern carriage elections and describe the information a station must include in its carriage request ''to ensure that a satellite carrier has the base information it needs to commence the carriage of local television stations.'' The rules also require satellite carriers to respond to must carry elections by accepting or denying carriage and providing reasons for denial. We noted, by way of example, that a valid reason for not commencing carriage is ''poor quality television signal.'' In addition, with respect to substantial duplication, we noted that a satellite carrier is not required to carry stations that broadcast programming that duplicates another station carried in the market. However, a broadcast station requesting mandatory carriage is not required to provide evidence with its request to prove that it does not duplicate. Indeed, it would be difficult or impossible for a station to do so because it does not know which other stations in the market have requested carriage. Rather, if the satellite carrier has a reasonable basis for asserting that the station substantially duplicates another station carried in the market, the carrier should describe its basis in sufficient detail to afford the station an opportunity to respond.

40. In the context of carriage elections, we did not require broadcast stations to provide information about signal quality nor did we require each station electing must carry to first prove to the satellite carrier that its signal is of good quality. Rather, we left it to the satellite carrier, in its response to a request for mandatory carriage, to notify the station if the request is rejected and the reason for refusal is a poor quality signal. If a satellite carrier has a reasonable, good-faith basis for believing that a station is not delivering a good quality signal to the designated receive facility, then it may describe its basis for this belief in its response to the station's request for mandatory carriage. We do not require in the satellite context, as we did in the cable context, that satellite carriers must conduct tests or present specific measurements to broadcasters in response to requests for mandatory carriage. However, the absence of this express requirement should not be taken to imply that the satellite carrier is not required to have a reasonable basis for a denial of carriage and to convey that information to the broadcast station affected. With respect to the issue of signal quality, a station should not be rejected for carriage unless, based on a knowledge of the facts and circumstances involved, there are engineering reasons for doubting that a good quality signal is likely to be available. Our expectation was that carriers would generally be able to readily determine whether the signal of a station requesting carriage is being received by the facility's reception equipment. It is implicit in the notification requirement, and indeed it is explicit in the statute itself, that stations are entitled to carriage if they qualify based on the applicable statutory and regulatory provisions. Carriage is not to be avoided by denials where there is no legitimate controversy as to the station's qualifications.

41. In discussing ''disputed'' signal quality, the *Report and Order* concluded that a satellite carrier is not required to carry a station ''until'' the station provides or pays the costs for a good quality signal. We required that ''the signal testing practices in the cable carriage context should be generally applied in the satellite carriage context.'' In the event of a dispute over signal quality, we advised parties to look to cable precedent for guidance,

and we concluded that the broadcast station should pay the cost of signal tests if necessary to prove that the signal is of good quality. If, however, the satellite carrier has no reasonable basis for contending that the broadcast station does not provide a good quality signal, then no test is required. When a carrier has a reasonable basis for asserting that the station is not providing a good quality signal, the station has the opportunity to improve its over-the-air signal or arrange alternative means of delivery. In that case, or if the station responds with a promise to provide or pay to provide a good quality signal in the future, we encourage the parties to arrange a reasonable time frame within which the good quality signal will be provided to avoid long-term uncertainty that ties up the carrier's capacity.

42. We further clarify that rejection of a request for carriage based on a broadcast station's ''failure'' to prove in its initial request for carriage that it delivers a good quality signal to the receive facility is not a valid ground for refusing carriage. Specifically, it has been reported to us that at least one satellite carrier has utilized a form letter that rejected carriage requests solely on the basis of ''failure to prove signal meets legal standard of quality necessary for mandatory carriage.'' This is not a valid reason for rejecting a request for mandatory carriage. Additionally, we are informed that the same carrier's form letter also attempts to shift the burden to the station requesting carriage to prove that it does not substantially duplicate another station that has requested carriage. Such attempts to shift the burden to the station requesting carriage do not comply with the rule or the *Report and Order*. We believe that stations that have received such form letters may appropriately respond by notifying the satellite carrier pursuant to section 76.66(m)(1) that it has failed to meet its obligations under the rules. Such notification by the broadcast station should specify how the satellite carrier's response failed to comply. For example, in response to a carrier's assertion that the station has failed to prove its signal quality, a station could provide information that the receive facility is within the station's Grade A service contours or that the Individual Location Longley-Rice computer model predicts that the station delivers a good quality signal to the receive facility. The satellite carrier would have 30 days to respond, pursuant to section 76.66(m)(2). The carrier could use the response to rescind its initial rejection and agree to carry the station or to provide specific information as to its basis for asserting that the station is not entitled to carriage. This response must state either that the station will be carried (*e.g.*, as of January 1, 2002 for the first election cycle), or provide reasons, including the reasonable basis therefor, for not carrying the station as requested.

43. We also clarify that the 60 days within which a complaint must be filed with the Commission pursuant to section 76.66(m)(6) will commence after the satellite carrier submits a final rejection of a broadcast station's carriage request, as clarified in this *Order on Reconsideration*. If a satellite carrier provides no response to a must carry election, the 60 days commences after the time for responding as required by the rule has elapsed. Or, in the case of a carrier's failure to provide the second response, as described above, the 60 days commences after the 30 days for response pursuant to section 76.66(m)(2) has elapsed. As in the cable context, if the parties are negotiating to resolve carriage disputes (*e.g.*, a station and carrier are planning to conduct a signal quality test or to determine alternative means for signal delivery), the 60 days does not begin to run until resolution efforts have failed, and the satellite carrier has notified the station in writing that it will not be carried. We continue to hope that parties will work together to resolve disputes or to determine that disputes cannot be resolved by negotiation and that Commission action is required. We note, however, that a station that has received an initial rejection letter may file a complaint with the Commission within 60 days of receipt if it believes that the carrier's apparent resolution efforts are not in good faith and are intended primarily to delay or derail legitimate carriage.

44. To summarize, as a general and guiding principle, we take this opportunity to note that the Act requires satellite carriers to carry stations upon request in those markets in which the carrier uses the statutory copyright license to retransmit one or more local stations. If the satellite carrier has a good faith, reasonable basis for refusing carriage, the carrier has the initial responsibility to specify that basis and to provide the station with adequate information and justification for its refusal. This principle applies to any refusal to carry, not only to refusals based upon signal quality. It is not consistent with the SHVIA or our rules to attempt to place the burden on the broadcast station to prove why it is entitled to carriage in the absence of a legitimate reason for questioning its eligibility. It is also inconsistent with the Act and rules to refuse to provide broadcast stations with reasonable and readily available access to the local receive facility to conduct signal strength tests as necessary. As in the cable context, a satellite carrier that fails to comply with the Act and rules, for example by using the notification procedures to frustrate the process or delay carriage without justification is not acting in the public interest and may be subject to further actions. In addition, in the satellite context, a local broadcast station may file a civil action under section 501(f) of the copyright provisions in title 17 to the extent the satellite carrier's actions result in a failure to carry a station entitled to carriage.

2. Consistent Carriage Elections

45. As indicated in the *Report and Order*, television broadcast stations are not required to have the same election requirement—*i.e.*, of either retransmission consent or must carry—between a satellite carrier and a cable operator. This decision was based in part on the lack of statutory language requiring television stations to make consistent retransmission consent/must carry elections for the two types of MVPDs, but also on the service area differences between satellite carriers and cable operators. In this *Order on Reconsideration*, we further clarify that where there is more than one satellite carrier in a local market area, a television station can elect retransmission consent for one satellite carrier and elect must carry for another satellite carrier. We believe that allowing broadcast stations to elect independently is consistent with our goal of promoting competition in the MVPD market.

3. Retransmission Consent Agreements

46. Under our rules, a television station must, during the first election cycle, notify a satellite carrier by July 1, 2001 of its carriage intention if it is located in a market where local-into-local service is provided. Beyond the first election cycle, our rules require television stations to make their retransmission consent-mandatory carriage election by October 1st of the year preceding the new cycle for all election cycles after the first election cycle. Commercial television stations are required to choose between retransmission consent and mandatory carriage by the prescribed date; NCE stations, on the other hand, must simply request carriage. A satellite carrier, in turn, must respond to a television station's carriage request within 30 days

of receiving notice (*e.g.*, for the first election cycle, by August 1, 2001), and state whether it accepts or denies the carriage request. If the satellite carrier denies the request, it must state the reasons why. We clarify that, absent an agreement by the parties to the contrary, if a broadcast station has a retransmission agreement that extends into and terminates during an election cycle, the station—at the end of its contract term with the carrier—will not be entitled to demand must carry if it has not elected must carry by the required date (*i.e.*, by July 1, 2001 for the first election cycle, by October 1, 2005 for the next election cycle, etc.). We believe that this clarification is consistent with the requirements of the statute that, in the absence of a specific request for carriage by the relevant election deadline, a broadcaster is deemed to have elected retransmission consent and cannot assert a demand for carriage until the next election cycle.

4. Amendment of Carriage Request Provisions

47. On our own motion, we take this opportunity to clarify and amend the rule provisions concerning carriage election provisions that apply to satellite carriers. As described in the *Report and Order*, under section 338, satellite carriers are required to carry broadcast stations only ''upon request.'' The *Report and Order* further explains that if an existing station fails to request carriage by the election deadline, it is not entitled to demand carriage for the duration of that cycle. The request for carriage is manifested by the station's election of must carry by the specified deadline. Section 76.66(d)(1)(i) provides that ''a retransmission consent-mandatory carriage election made by a television broadcast station shall be treated as a request for carriage for purposes of this section.'' We are concerned that, as written, this provision could be misconstrued to mean that an election for retransmission consent constitutes a request for carriage that necessitates mandatory carriage under the statute. To avoid confusion or misinterpretation of this language, we revise section 76.66(d)(1)(i), as follows: ''An election for mandatory carriage made by a television broadcast station shall be treated as a request for carriage. For purposes of this subsection concerning carriage procedures, the term ''election request'' includes an election of retransmission consent or mandatory carriage.'' We will also change the reference from ''carriage request'' to ''election request'' in section 76.66(d)(1)(ii) to conform to the revision in section 76.66(d)(1)(i).

48. In addition, on our own motion, we clarify and amend section 76.66(d)(2)(ii), which provides for carriage elections by television broadcast stations in new local-into-local markets. This provision requires local stations to make elections and requests for carriage ''in writing, no more than 30 days after receipt of the satellite carrier's notice.'' We note that this provision does not contain the same requirements that apply to carriage elections for existing local-into-local markets. We believe that certified mail, return receipt requested is the preferred method to ensure that broadcast stations are able to demonstrate that they submitted their elections by the required deadline, and that they were received by the satellite carrier. Therefore, we will amend section 76.66(d)(2)(ii) as follows: ''A local television station shall make its election request, in writing, sent to the satellite carrier's principal place of business by certified mail, return receipt requested, no more than 30 days after the station's receipt of the satellite carrier's notice of intent to provide local-into-local service in a new television market. This written notification shall include the information required by Section 76.66(d)(1)(iii).''

49. We will also amend section 76.66(d)(3)(ii), which provides for elections and carriage requests for new television stations to be consistent with sections 76.66(d)(1) and (2), as amended. The amended language is as follows: ''A new television station shall make its election request, in writing, sent to the satellite carrier's principal place of business by certified mail, return receipt requested, between 60 days prior to commencing broadcasting and 30 days after commencing broadcasting. This written notification shall include the information required by Section 76.66(d)(1)(iii).''

50. For similar reasons of consistency, we amend sections 76.66(d)(2)(iv) and (3)(iv), that set forth the procedures for new local-into-local service and new television stations, respectively. These amendments clarify the requirement that satellite carriers respond to elections for mandatory carriage within 30 days with notification of either agreement to carry or not to carry, along with reasons for the latter decision. These amendments track the requirement in section 76.66(d)(1)(iv). Accordingly, section 76.66(d)(2)(iv) is amended as follows: ''Within 30 days of receiving a local television station's election of mandatory carriage in a new television market, a satellite carrier shall notify in writing: (1) those local television stations it will not carry, along with the reasons for such decision; and (2) those local television stations it intends to carry.'' Also, section 76.66(d)(3)(iv) is amended as follows: ''Within 30 days of receiving a new television station's election of mandatory carriage, a satellite carrier shall notify the station in writing that it will not carry the station, along with the reasons for such decision, or that it intends to carry the station.''

51. In this respect we also note that if a satellite carrier provides notification of intent to provide local-into-local service in a new market, pursuant to section 76.66(d)(2)(i), the satellite carrier must respond to an election of mandatory carriage, requested pursuant to section 76.66(d)(2)(ii), as required by section 76.66(d)(2)(iv), notwithstanding that it has not yet commenced local-into-local service in that market. We clarify that the satellite carrier is not required to carry a local television station that elects mandatory carriage in the new local-into-local market until the satellite carrier has commenced such service. We amend section 76.66(d)(2)(iii) accordingly, as follows: ''A satellite carrier shall commence carriage of a local station by the later of 90 days from receipt of an election of mandatory carriage or upon commencing local-into-local service in the new television market.''

52. We further clarify that, with respect to determining the satellite carrier's principal place of business for purposes of submitting an election or carriage request, we believe it would be appropriate for a local television station to use a satellite carrier's letterhead address or other readily available principal address. If the satellite carrier wishes to designate a particular name or address for purposes of receipt of election notices, the carrier bears the obligation of providing that information to the local television stations no later than 30 days prior to the deadline for election and carriage requests. In addition, as in the cable context, the local television station's election or request for carriage may be signed by any person authorized to make and submit such election on behalf of the station.

53. In response to numerous telephone inquiries, we clarify that election requests must be sent by the relevant election deadline. In the cable context, section 76.64(h) provides that ''on or before each must carry/retransmission consent deadline, each television broadcast station shall * * * send via certified mail to each cable system in the station's defined market a copy of the station's election statement with respect to that operator.'' The rules

implementing satellite carriage requirements do not contain the same language, and we received no comments on this specific question during the rulemaking proceeding. In light of our general goal of making the satellite carriage rules comparable and parallel to the cable carriage rules, and in the absence of arguments demonstrating why the procedures for election notifications should differ, we clarify our intent that the election request should be sent by certified mail, return receipt by the election date to be effective. We hereby amend section 76.66(d) of our rules to clarify this intent, as follows: ''(4) Television broadcast stations must send election requests as provided in Sections 76.66(d)(1), (2), and (3) on or before the relevant deadline.''

5. Allocation of Costs for Reception Equipment at Receive Facility

54. DIRECTV in an ex parte meeting and submission requested a clarification that it would be permissible for a satellite carrier to ''pass through to broadcasters the costs incurred on the broadcaster side of the demarcation point at the local receive facility.'' DIRECTV asserts that section 76.66(g)(2) requires the broadcaster to provide a good quality signal ''at the input terminals of the signal processing equipment.'' DIRECTV contends that, in the satellite context, ''this would mean the input to any signal preamplifiers in the antenna downlead. Thus, the demarcation point for a station to hand off a 'good quality signal' must be at the preamplifier input, which in [DIRECTV's] case is a junction box at the point where the downleads enter the building.'' DIRECTV wants to pass through to broadcasters on a pro rata basis the costs of providing the rooftop equipment and other costs related to signal reception up to the junction box, which DIRECTV refers to as the ''demarcation point.'' DIRECTV further explains that the ''non-recurring costs'' for negotiating roof rights, obtaining local permits, mounting antenna masts and installing conduit range from $1,000 to $45,000 and average $15,000. DIRECTV estimates average monthly costs for maintaining roof rights would be $2,500. DIRECTV proposes to pass these costs on to the broadcasters in the market, both those carried pursuant to retransmission consent and mandatory carriage. In the average case, and assuming ten stations in the market, DIRECTV estimates charging each station ''a one-time, non-recurring charge of $1,500, and a recurring charge of $250 per month.''

55. In response to DIRECTV's views on this issue, NAB and ALTV, in a joint ex parte letter, contend that a station's obligation under the Act is only to deliver a good quality signal, ''and not to build (or rent) a local receive facility for a DBS operator.'' NAB and ALTV assert that ''the roof space on which DIRECTV has erected (or plans to erect) antennas is the relevant part of its local receive facility; and all that a station is required to do is deliver a good quality signal to that location.'' Thus, they argue, DIRECTV's demand that stations pay for DIRECTV's own real estate costs for creation of a local receive facility is ''inconsistent with the division of responsibility established by Congress in the SHVIA.''

56. DIRECTV's proposal and request for clarification raise an issue not mentioned in the original proceeding nor in the Petitions for Reconsideration. We do not have in the record information that would warrant a decision that could potentially impose unexpected expense on broadcast stations. We note that, in the cable context, upon which the satellite carriage rules generally are based, the cable system headends typically include antennas and other receiving and processing equipment necessary to receive a broadcaster's good quality signal. We have required cable operators to employ good engineering practices with respect to receiving and processing the broadcast station's signal. In the *Cable Must Carry Report and Order,* we noted that the television station has the obligation to bear the costs associated with delivering a good quality signal to the system's principal headend. In this context we offered by way of example, ''improved antennas, increased tower height, microwave relay equipment, amplification equipment and tests that may be needed to determine whether the station's signal complies with the signal strength requirements, especially if the cable system's over-the-air reception equipment is already in place and operating properly.'' Cable operators are not, however, required to bear the burden of improving a broadcast station's signal.

57. In the Order clarifying the *Cable Must Carry Report and Order,* the Commission was asked to address whether the broadcaster or the cable system should pay for the purchase, installation, and maintenance of a special antenna if necessary to receive adequate signal strength. The Commission concluded that the statute specifies that a broadcast station must deliver a good quality signal to the principal headend of the cable system in order to be entitled to mandatory carriage, and, for broadcast stations received at the principal headend and carried on the system, the signal quality measurements should be made using the existing equipment at the headend. For stations that were not carried by the cable system prior to the implementation of the carriage rules, the Commission concluded that cable operators should measure the signal quality using ''generally accepted equipment that is currently used to receive signals of similar frequency range, type or distance from the principal headend'' but need not ''employ extraordinary measures or specialized equipment'' for stations not currently carried. The Commission also reiterated what was said in the *Cable Must Carry Report and Order* that broadcasters may provide ''improved antennas'' to deliver a good quality signal, that the cable operator may not refuse to allow the broadcaster to provide such types of equipment, either for measurements or delivery of signals, and that broadcasters ''shall be responsible for the cost of such specialized antennas or equipment. However, cable operators may not shift the costs of *routine reception of broadcast signals to those stations seeking must-carry status.*'' (emphasis added). The Commission concluded: ''Accordingly, we believe that it is appropriate to require a broadcast station to pay only for antennas, equipment and other needed improvements that are directly related to the delivery of its signal and not to contribute to the general maintenance of the cable system's facilities.''

58. We believe that for satellite carriers, like cable operators, it is reasonable to require that the local receive facility include, for example, the roof rights, antennas, towers, and processing equipment necessary to receive and process over-the-air good quality signals from local broadcasters. We do not believe, therefore, that it is consistent with our rules or with the statute to require broadcasters to pay for the basic equipment and property negotiations necessary to operate a receive facility. However, as in the cable context, if a broadcaster would require special or additional equipment so that its signal can be received at the established level of good quality at the receive facility, then the broadcaster is responsible for these additional costs.

III. Paperwork Reduction Act of 1995 Analysis

59. This *Order on Reconsideration* has been analyzed with respect to the Paperwork Reduction Act of 1995 and has been found to contain no new or

modified information collection requirements on the public. The rule revisions we adopt on our own motion are included in the approval we obtained from the Office of Management and Budget (''OMB''). *See* OMB Notice of Action (OMB No. 3060–0980) (June 7, 2001). No further OMB approval is required.

IV. Ordering Clauses

60. *It is ordered,* pursuant to section 405(a) of the Communications Act of 1934, 47 U.S.C. 405(a), and section 1.429 of the Commission's rules, 47 CFR 1.429, that DIRECTV's Petition for Reconsideration and the Association of Local Television Stations' Petition for Reconsideration *are denied.*

61. *It is further ordered,* pursuant to sections 4(i), 4(j), and 303 of the Communications Act of 1934, as amended, 47 U.S.C. 154(i), 154(j), and 303, that the amendments to rule 47 CFR 76.66 discussed in this *Order on Reconsideration* and set forth in Appendix A, and the clarifications of that rule discussed in this *Order on Reconsideration, are adopted,* and shall become effective October 26, 2001.

List of Subjects in 47 CFR Part 76

Cable television, Multichannel video and cable television service.

Federal Communications Commission.

Magalie Roman Salas,

Secretary.

Rule Changes

For the reasons discussed in the preamble, the Federal Communications Commission amends 47 CFR part 76 as follows:

PART 76—MULTICHANNEL VIDEO AND CABLE TELEVISION SERVICE

1. The authority citation for part 76 continues to read as follows:

Authority: 47 U.S.C. 151, 152, 153, 154, 301, 302, 303, 303a, 307, 308, 309, 312, 315, 317, 325, 338, 339, 503, 521, 522, 531, 532, 533, 534, 535, 536, 537, 543, 544, 544a, 545, 548, 549, 552, 554, 556, 558, 560, 561, 571, 572, 573.

2. Section 76.66 is amended by revising paragraph 3(d)(1)(i), (d)(2)(ii), (iii), (iv), (d)(3)(ii), (iv), and (d)(4) to read as follows:

§ 76.66 Satellite broadcast signal carriage.

* * * * *

(d) *Carriage procedures.* (1) *Carriage requests.* (i) An election for mandatory carriage made by a television broadcast station shall be treated as a request for carriage. For purposes of this paragraph concerning carriage procedures, the term election request includes an election of retransmission consent or mandatory carriage.

(ii) An election request made by a television station must be in writing and sent to the satellite carrier's principal place of business, by certified mail, return receipt requested.

* * * * *

(2) * * *

(i) * * *

(ii) A local television station shall make its election request, in writing, sent to the satellite carrier's principal place of business by certified mail, return receipt requested, no more than 30 days after the station's receipt of the satellite carrier's notice of intent to provide local-into-local service in a new television market. This written notification shall include the information required by paragraph (d)(1)(iii) of this section.

(iii) A satellite carrier shall commence carriage of a local station by the later of 90 days from receipt of an election of mandatory carriage or upon commencing local-into-local service in the new television market.

(iv) Within 30 days of receiving a local television station's election of mandatory carriage in a new television market, a satellite carrier shall notify in writing: Those local television stations it will not carry, along with the reasons for such decision, and those local television stations it intends to carry.

(3) * * *

(i) * * *

(ii) A new television station shall make its election request, in writing, sent to the satellite carrier's principal place of business by certified mail, return receipt requested, between 60 days prior to commencing broadcasting and 30 days after commencing broadcasting. This written notification shall include the information required by paragraph (d)(1)(iii) of this section.

* * * * *

(iv) Within 30 days of receiving a new television station's election of mandatory carriage, a satellite carrier shall notify the station in writing that it will not carry the station, along with the reasons for such decision, or that it intends to carry the station.

(4) Television broadcast stations must send election requests as provided in paragraphs (d)(1), (2), and (3) of this section on or before the relevant deadline.

* * * * *

[FR Doc. 01–23970 Filed 9–25–01; 8:45 am]

BILLING CODE 6712–01–P

DEPARTMENT OF COMMERCE

National Oceanic and Atmospheric Administration

50 CFR Part 640

Spiny Lobster Fishery of the Gulf of Mexico and South Atlantic

CFR Correction

In title 50 of the Code of Federal Regulations, part 600 to end, revised as of October 1, 2000, part 640 is corrected by adding Figure 1 as follows:

PART 640—SPINY LOBSTER FISHERY OF THE GULF OF MEXICO AND SOUTH ATLANTIC

* * * * *

Figures—Part 640

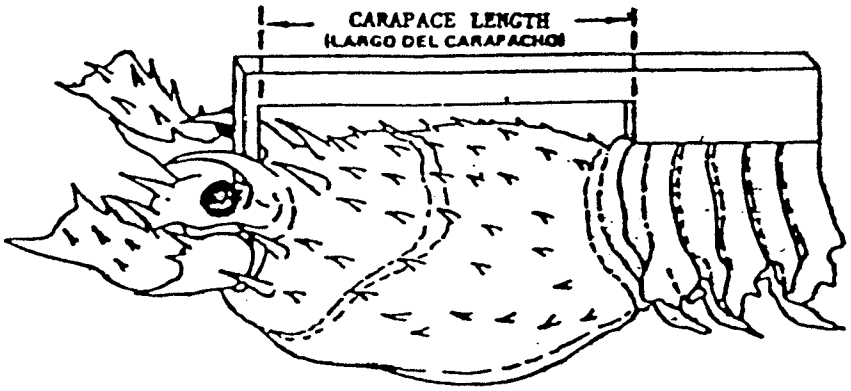

Figure 1

[FR Doc. 01–55529 Filed 9–25–01; 8:45 am]
BILLING CODE 1505–01–D

DEPARTMENT OF COMMERCE

National Oceanic and Atmospheric Administration

50 CFR Part 648

[Docket No. 010319075–1217–02; I.D. 011101A]

RIN 0648–AF87

Fisheries of the Northeastern United States; Fishery Management Plan for Tilefish

AGENCY: National Marine Fisheries Service (NMFS), National Oceanic and Atmospheric Administration (NOAA), Commerce.

ACTION: Final rule.

SUMMARY: NMFS announces the approval of the Fishery Management Plan for Tilefish (FMP) and issues a final rule to implement that FMP. The final rule is designed to eliminate overfishing, as defined in that FMP, and to rebuild the tilefish stock in the northwest Atlantic Ocean by implementing: A stock rebuilding strategy; a limited entry program; a tiered commercial quota; permit and reporting requirements for commercial vessels, operators, and dealers; a prohibition on the use of gear other than longline gear by limited-access tilefish vessels; and an annual specification and framework adjustment process.

DATES: This final rule is effective November 1, 2001.

ADDRESSES: Copies of the FMP, its Regulatory Impact Review (RIR)/Initial Regulatory Flexibility Analysis (IRFA), and the Final Environmental Impact Statement (FEIS) are available from Daniel T. Furlong, Executive Director, Mid-Atlantic Fishery Management Council, Room 2115, Federal Building, 300 South New Street, Dover, DE 19904–6790.

Comments regarding the collection-of-information requirements contained in this final rule should be sent to Patricia A. Kurkul, Regional Administrator, NMFS, Northeast Regional Office, One Blackburn Drive, Gloucester, MA 01930, and to the Office of Information and Regulatory Affairs, Office of Management and Budget, Washington, DC 20503 (Attn: NOAA Desk Officer).

FOR FURTHER INFORMATION CONTACT: Bonnie Van Pelt, Fishery Management Specialist, voice 978–281–9244; fax 978–281–9135; e-mail Bonnie.L.Vanpelt@noaa.gov.

SUPPLEMENTARY INFORMATION:

Background

A Notice of Availability (NOA) of the FMP was published in the **Federal Register** on February 12, 2001 (66 FR 9814), with a comment period ending April 13, 2001. A proposed rule to implement the FMP was published in the **Federal Register** on April 3, 2001 (66 FR 17673), with a comment period ending May 18, 2001. The FMP was approved by NMFS on behalf of the Secretary of Commerce (Secretary) on May 10, 2001.

This final rule is designed to eliminate overfishing as defined in the FMP and to rebuild the tilefish stock in the Northwest Atlantic Ocean by implementing: (1) A stock rebuilding strategy; (2) a limited entry program; (3) tiered commercial quota allocations or total allowable landings (TAL) for limited access and open access permit categories; (4) a prohibition on the use of gear other than longline gear for limited access tilefish vessels; (5) permit and reporting requirements for commercial vessels, operators, and dealers; and (6) an annual specification and framework adjustment process. These items form the basis for management of the stock. Discussions and details pertaining to these items and the justification for the development of the FMP are found in the preamble to the proposed rule and the NOA and are not repeated here.

The annual quota setting process implemented by this final rule differs from that set forth in the FMP in order to incorporate the provisions of the Council's omnibus framework, Framework 1 (covering most of the Council's FMPs), which allow the Council to set aside up to 3 percent of a species' TAL to be used to compensate for research. Framework 1 established the ability to modify quotas through the annual specification process. The background of the framework and the quota modification process are discussed in the preamble to the final rule implementing Framework 1, published August 10, 2001 (66 FR 42156), for other Mid-Atlantic fisheries.

This final rule differs from the proposed rule by providing for an up to 3-percent research set-aside for tilefish and by revising the vessel reporting requirements for the tilefish Interactive Voice Response System (IVR) by requiring that vessel owners/operators report on a trip-by-trip basis, rather than on a weekly basis. Since the average tilefish trip is 10 days, this change from weekly to per trip reporting better reflects fishing practices. Paperwork Reduction Act (PRA) burden estimates for individual vessel reporting through the IVR over the entire fishing year decrease due to this change.

Comments and Responses

NMFS received 306 written comments on the FMP and the proposed rule. Five commenters favored the approval of the FMP and the implementing measures. The remaining commenters were opposed to one or more portions of the FMP and/or its implementing

regulations. Comments focused on the gear impacts portion of the Essential Fish Habitat (EFH) description, the stock rebuilding strategy, the limited access program and related ancillary economic impacts, implementation of the conservation recommendations described in the FEIS, and endangered species interactions.

Comment 1. Numerous commenters stated that the gear impacts portion of the EFH designation should be disapproved since it does not list bottom-tending mobile gear (trawls and dredges) as gear capable of destroying tilefish burrows. One commenter indicated that a conservative approach would have listed bottom-tending gear as having an adverse impact on EFH and supported a prohibition of bottom-tending gear in the Habitat Area of Particular Concern (HAPC).

Response. While bottom-tending mobile gear could potentially impact tilefish habitat by causing, for example, the filling or closing off of tilefish burrow openings, there is no scientific evidence showing that bottom-tending mobile gear adversely affects tilefish habitat. Tilefish burrows are subterranean and, as such, may not be susceptible to impacts from mobile gear as epibenthic (i.e., above the bottom) structures. Based on the adverse economic effects that a prohibition on the use of bottom-tending mobile gear in tilefish HAPC would have upon several other fisheries and on the lack of scientific evidence showing identifiable adverse effects caused by such gear on tilefish EFH and HAPC, the Council did not propose gear prohibitions in the HAPC on other than limited access tilefish vessels. The Council's discussion and rationale supporting its actions satisfy the requirements of 50 CFR 600.815(a)(3) to minimize, to the extent practicable, the adverse effects of fishing on EFH.

Tilefish are harvested primarily (approximately 97 percent) by longline gear; impacts on habitat from this type of gear are not detectable and, if they occur, are probably minimal and temporary. This final rule prohibits limited access tilefish vessels from using gear other than longline gear.

Comment 2. One commenter stated that the issues surrounding the effects of bottom trawling (long and short-term) on tilefish EFH should be resolved, and that the Council and NMFS have an obligation to prevent, mitigate, or minimize adverse effects of fishing on tilefish EFH to the extent practicable, if there is evidence that a fishing practice is having an identifiable adverse effect on EFH.

Response. Initially, the Council determined that bottom trawls adversely impacted EFH by destroying tilefish burrows. The determination was made by inference, using scientific reports on habitat damage caused by trawling. The adverse impact determination was included in the Council's draft Draft Environmental Impact Statement (DEIS) on which the Council held public hearings. A large number of commenters (vessel owners, fish buyers and processors) disagreed with this determination because of the lack of specific scientific evidence to support it. The Council, in response, convened a workshop comprised of tilefish experts to determine whether there was adequate information to make a determination of adverse impacts. Participants in the workshop concluded that nothing is definitively known about tilefish habitat and mobile fishing gear interactions. Based on this, the Council changed its determination in the FEIS/FMP for bottom trawls to ''bottom trawl gear is not adequately identified as having an adverse effect on tilefish EFH.'' NMFS agrees with this determination. NMFS supports mitigative measures to prevent adverse impacts to tilefish EFH to the extent that they are practicable. NMFS and the Council support a cooperative research program to further investigate this issue. In the meantime, in the absence of any specific evidence showing there is an adverse impact on tilefish EFH from trawling, the Council chose not to propose any management measures to address the effects of trawl fishing on tilefish EFH. This final rule implements a framework mechanism to allow for the development and implementation of management measures to minimize impacts from gear on tilefish EFH should they be shown to exist.

Comment 3. One commenter stated that the Council's proposed rebuilding strategy, which has a 50-percent probability of rebuilding the stock within 10 years, should be replaced with a rebuilding program where stocks would have 75-percent probability of being rebuilt in 8 years.

Response. Section 304(e)(4)(A) of the Magnuson-Stevens Fishery Conservation and Management Act (Magnuson-Stevens Act) requires, for a fishery that is overfished, that an FMP specify a time period for ending overfishing and rebuilding the fishery that is as short as possible, taking into account the status and biology of any overfished stocks of fish, the needs of fishing communities, recommendations by international organizations in which the United States participates, and the interaction of the overfished stock of fish with the marine ecosystem, and does not exceed 10 years except in cases where the biology of the stock of fish, or other environmental conditions, or management measures under an international agreement in which the United States participates, dictate otherwise. Based on the factors required by the Magnuson-Stevens Act to be considered and upon the record before the Council, NMFS agrees with the Council that, for the tilefish fishery, a stock rebuilding plan with a 50-percent probability of rebuilding the stock within 10 years is appropriate.

Comment 4. One commenter alleged that a constant-harvest strategy allows overfishing to occur in the near term, which is inconsistent with the requirements of the Sustainable Fisheries Act (SFA) amendments to the Magnuson-Stevens Act.

Response. Although a constant-harvest strategy would allow overfishing to continue in the start-up years of the FMP, this is permissible under the SFA. Section 304(e) of the Magnuson-Stevens Act contemplates Regional Fishery Management Councils to take action to end overfishing. Such action initiates rebuilding of an overfished stock. Section 304(e)(4)(A)(i) of the Magnuson-Stevens Act requires that a Council consider, among other factors, the needs of fishing communities, in specifying a time period for ending overfishing and rebuilding the fishery. Ending overfishing in a fishery that is severely overfished cannot be accomplished in the first few years without severe economic and social impacts on the participants and fishing communities. Such drastic action is not required in this instance. Furthermore, the Council projected potential economic benefits of a constant-harvest strategy, such as ease in quota management and a constant long-term economic planning horizon for industry participants.

Comment 5. One commenter stated that there should be a precautionary backstop in the event that stock recovery does not progress according to the rebuilding schedule, such that NMFS could adopt a reference point at 1/4 Bmsy that, if reached, would trigger the closure of the fishery.

Response. The regulations provide a backstop mechanism. The FMP Monitoring Committee, which is required to meet after the completion of each stock assessment, or at the request of the Council Chairman, reviews landings information and any other relevant available data to determine whether the annual quota requires modification to respond to any changes to the stock's biological reference points

or to insure that the rebuilding schedule is maintained.

Comment 6. Numerous commenters alleged that limited entry Option 2 should not be approved since it is not fair and equitable to all participants in the fishery.

Response. Limited entry Option 2 was not the option adopted by the Council and approved in the FMP. The Council adopted limited entry Option 6, which was approved by NMFS. Option 6 was recommended to the Council by present and historical industry participants in the tilefish fishery. It incorporates Option 2 for full-time vessels and allows for an expansion of the qualifying time frame for part-time vessels. Option 6 also contemplates an amendment to the limited entry program in the FMP at the end of the 10-year rebuilding period, or when the fishery is rebuilt, whichever comes first, to formalize the qualifying period for entry into the tilefish fishery from 1984 though 1998.

Comment 7. Several commenters stated that the tilefish limited access program does not meet the objectives of the FMP.

Response. The objectives of the FMP are to be accomplished through the suite of measures contained therein. It is not necessary that each management measure in an FMP accomplishes every one of the FMP's objectives. In the case of the tilefish limited access program, it will not only reduce overcapitalization, consistent with Objective 2 of the FMP, but it also will prevent overfishing and contribute to the rebuilding of the stock by limiting fishing effort and maintaining the integrity of the annual quota, which meets Objective 1. Further, the data collected through the reporting requirements applied to vessels in the limited access program fulfills the requirements of Objective 4. The identification and description of EFH in Objective 3 are accomplished through other components of the FMP.

Comment 8. Several commenters alleged that the FMP is devoid of discussion on how allocation alternatives further the goals of the FMP.

Response. NMFS disagrees. The overall goal of the FMP is to rebuild tilefish so that Optimum Yield can be obtained. To help achieve this, this rule implements a limited access system with specified amounts of TAL allocated to the various permit categories. Once the allocation or quota for a given limited access permit category is harvested, the Administrator, Northeast Region, NMFS (Regional Administrator) will close the EEZ to fishing for tilefish for that permit category for the remainder of the year. The limitation of fishing effort represented by the limited access categories and these closures will ensure the integrity of the annual quota and facilitate rebuilding of the stock. Specific discussions of the environmental and economic impacts of these alternatives can be found in sections 3.1 and 4.7 of the FMP.

Comment 9. One commenter alleged that Option 6 was brokered between two factions of the industry without regard to Constitutional due process and was not considered by the Tilefish Committee. The commenter asserted that two industry groups, competitors of a current participant in the fishery, came to a compromise that was then adopted by the Council as Option 6, without analysis. The commenter believed the Council's Option 3 was reasonable and would have qualified the present participant concerned into the limited access program.

Response. Option 6 incorporates the same requirements as Option 2 for full-time vessels. In addition, Option 6 expands the time frame for qualifying for the part-time category by allowing for consideration of landings of at least 28,000 lb (12,701 kg) of tilefish in any 1 year from 1984 to 1993, at least one pound of which was landed prior to June 15, 1993, as a qualifying criterion. This alternative was supported by the differing factions in the tilefish fishery. The industry made a presentation to the Council regarding this alternative. After due deliberation, the Council adopted this alternative as Option 6. This alternative was thoroughly analyzed by the Tilefish Technical Committee prior to the Council adoption of the final version of the FMP. The inclusion in Option 6 of historical participants who fished as far back as 1984 was reasonable in the view of the Council, given the factors it has to consider under section 303(b)(6) of the Magnuson-Stevens Act. Option 6 was adopted during a full and open Council process; all interested parties had the opportunity to provide input and comments prior to its adoption. NMFS published a NOA and a proposed rule for further public comment. This is all part of the process of preparation, approval, and implementation of the FMP. NMFS agrees that limited access Option 3, the preferred option in the DEIS, is reasonable. However, no commenters, including the participant that the commenter is referring to, favored Option 3. The Council believed that a rejection of its preferred option of that magnitude by the industry required it to choose an alternative limited access option that would achieve the same conservation goals.

Comment 10. One commenter alleged that the justification for adopting Option 6 was that the Council did not have to conduct any analysis; the Council could simply adopt the agreement reached by the select group who participated in a closed meeting. The commenter also stated that a present participant's landings were not considered in the decision to adopt Option 6 and that the vessel in question will likely be unable to qualify for a full-time tier 1 category permit.

Response. The Council's Tilefish Technical Committee conducted an analysis of Option 6, as summarized in Table 79 in the FMP. Further, the Council's decision to adopt Option 6 was detailed in an open public forum, in which the industry participated. All data considered in analyzing the various options were contained in NMFS' official database. In addition, the Council considered additional data from vessels, which it solicited from the states (only landings from the State of New York were submitted), for the period 1988 through 1998.

Since the limited access tilefish fishery has not yet been implemented, there is no basis to determine specifically which vessels would qualify for the different limited access permit categories. Once these final regulations become effective, vessel owners will have an opportunity to apply for a particular limited access permit category and produce supporting landings information. The Council used a blind analysis, in which vessels were identified only by a random number, to ascertain the number of vessels that would qualify for the different permit categories under the different options. The Council had no information to conclude whether a specific named vessel would qualify for a particular limited access permit category.

Comment 11. One commenter stated that Option 6 was created for the sole purpose of restructuring the top tier of eligible fishers and that there was no biological or ecological basis to exclude a current participant from the fishery. The commenter believed Option 6 was chosen based on economic allocation as its sole purpose, which would be a violation of national standard 5.

Response. Option 6 did not change the tier 1 qualification criteria. It incorporated the criteria from Option 2, without modification, thereby leaving the qualifying criteria for full-time tier 1 category as follows: 250,000 lb (113,398 kg) per year for 3 years between 1993 and 1998. All the management measures are designed to work in concert to meet the overall FMP goals and objectives. It is up to the

Council to exercise discretion in arriving at options to address stock rebuilding and to minimize adverse economic impacts. The Council did not consider economic impacts on individually named vessels in its deliberations; all of the analyses it conducted were done on a blind basis. The tilefish fishery is a very small fishery. The tilefish resource is sensitive to additional fishing effort that could slow or even prevent its rebuilding, depending on the level of effort involved. The annual quota under the constant harvest strategy is 1.995 million lb (904.9 mt). The four vessels that qualify for the tier 1 permit category have the capacity to harvest in excess of this amount. These vessels harvested 2.635 million lb (1195 mt) in 1997. Limiting the number of vessels participating in this fishery will help to decrease fishing mortality and to maintain the integrity of the annual quota. Since there is a biological basis limit entry into the tilefish fishery, the commenter's allegation that such limitation violates national standard 5 is without merit.

Comment 12. One commenter stated that Options 5 and 6 violate national standard 4.

Response. Option 5 was not adopted by the Council or approved by NMFS. Thus, whether it satisfies national standard 4 is irrelevant. The FMP is designed to prevent further overcapitalization by establishing a limited entry scheme. The allegations relating to national standard 4 are that the industry groups set the qualifying criteria for the full-time tier 1 to exclude a current participant from the fishery. However, the industry compromise did not propose to modify the qualifying criteria for tier 1. Indeed, those criteria were adopted by the Council prior to its consideration of Option 6 after much discussion, much of which involved industry input. The category qualifying criteria are simply performance criteria relating to levels of landings during a certain time period to differentiate between vessels that are heavily involved in the fishery (those that landed at least 250,000 lb (113,398 kg) per year for 3 years between 1993–1998) and those that are not (those vessels that landed 90,000 lb (408,233 kg) or less during the same or earlier expanded time frame). These criteria apply evenly across the fishery to all participants and represent a reasonable means to distinguish varying levels of participation in the tilefish fishery.

Comment 13. One commenter alleged that the FMP fails to consider the best data available in establishing the limited access system for tilefish and, therefore, violates national standard 2.

Response. NMFS disagrees. Limited access programs are designed to consider past and present participation and relative degrees of dependence on a fishery. All data used in developing the limited access permit and TAL allocations were based on the best and most recent information contained in the NMFS data base. These data constitute the best scientific information available.

Comment 14. One commenter stated that the tier 1 full-time qualified vessels catch small fish of which a significant majority are juveniles and sexually immature. Because of this, the commenter alleges it will be impossible for the tilefish stock to rebuild without a minimum fish size provision.

Response. It is possible that present participants are currently landing large numbers of small fish. However, there is evidence that, as the stock biomass decreases, a disproportionate number of smaller fish occur in the population. As the stock rebuilds and the age structure of the stock expands, the tendency to harvest small fish will decrease. A minimum fish size and gear restrictions are listed in the FMP as measures the Council could implement in the future through framework adjustment provisions, should data become available demonstrating such measures to be necessary and appropriate.

Comment 15. Several commenters indicated that the regulations and the FMP are not consistent with national standard 1.

Response. The FMP implements a rebuilding program that will prevent overfishing and attain Maximum Sustainable Yield (MSY) through a constant harvest strategy (within a reasonable time). The rebuilding strategy chosen is based on analyses conducted by the NMFS Northeast Fisheries Science Center (NEFSC) and has a 50-percent probability of rebuilding tilefish to the biomass that will support the MSY level within 10 years. The Council considered 13 rebuilding schedules that were either based on constant harvest levels or fishing mortality reduction levels, all of which were designed to rebuild to the biomass that will support MSY. The critical choices that the Council made were the selection of the time frame of 10 years for rebuilding and of the probability of rebuilding within that time frame of 50-percent. In addition, a benchmark stock assessment will be conducted every 3 years through the NEFSC Stock Assessment Review Committee (SARC)/Stock Assessment Workshop (SAW) process, the results of which will be evaluated by the Tilefish FMP Monitoring Committee. The Council will consider any recommendations of the Monitoring Committee and can adjust the annual harvest level in order to assure that the tilefish stock will be rebuilt within 10 years. This management strategy is consistent with national standard 1.

Comment 16. One commenter alleged that the preamble of the proposed regulations is inaccurate with respect to the discussion of the economic impacts of the FMP. The commenter stated that numbers clearly qualify a current vessel participant for a full-time tier 2 permit, yet the vessel is not included in the analysis.

Response. All of the analyses performed by the Council were blind. No individual vessels were identified in these analyses. The analyses employed the best and most recent data available in the NMFS database. The FMP has yet to be implemented. Once these regulations become effective, the participant concerned can apply for the full-time tier 2 category permit by submitting supporting landings information. If the participant's application is denied, the participant has the right to appeal the denial. The FMP and its implementing regulations include a provision for appeal, and individuals will be given an opportunity to document any landings they believe are inaccurate after the FMP is implemented.

Comment 17. One commenter believed that the FMP does not comply with national standard 1, and, notwithstanding data before the Secretary, the Secretary, in violation of national standard 2, failed to consider all the relevant economic impacts, and to use the best scientific and commercial information in approving the FMP.

Response. See the response to Comment 4 related to national standard 1. All data used in developing the FMP and its management measures were based on the best and most recent information contained in the NMFS database. These data constitute the best scientific information available. Thus, the FMP does not violate national standard 2.

Comment 18. One commenter stated that the Magnuson-Stevens Act requires that all the fishery management plans be consistent with other applicable laws. The commenter believes other applicable laws include the antitrust laws, which the commenter believes were violated during the FMP development process.

Response. Under the Noerr-Pennington doctrine, antitrust law does

not prohibit two or more persons from associating together to petition a government body to take a particular action with respect to a law that would produce a restraint of trade or monopoly. Thus, the industry's presentation to the Council of a further option it favored to manage the tilefish fishery did not violate antitrust law.

Comment 19. One commenter suggested that workable, protective measures to protect endangered species are preferable to cooperation between enforcement agencies and tilefish fishermen, as advocated in the FMP, to ensure compliance with the Endangered Species Act (ESA).

Response. NMFS conducted a formal section 7 consultation for the FMP, consistent with ESA guidelines. The biological opinion accompanying the consultation concluded that the tilefish fishery may take a small number of loggerhead and leatherback sea turtles. This small take is not expected to result in jeopardy to either sea turtle species or to other endangered and/or threatened species under NMFS' jurisdiction, including right whales and their critical habitat. Thus, protection measures for these species are not necessary at this time.

Comment 20. Several commenters, including a bait dealer, three crew members, a wharf owner, and a tackle dealer, claimed that the implementation of a limited access program and the commensurate reduction in potential harvest for a particular vessel would have significant negative economic impacts on their businesses and livelihoods.

Response. NMFS recognizes that there may be ancillary economic impacts on small entities, other than dealers and vessels, from actions that reduce fishing activity. Since the number of present participants in the fishery is small (from a total of 215 vessels that landed any tilefish in 1998, the FMP identified 4 full-time tier 1; 4 full-time tier 2; and 42 part-time vessels), it would seem unlikely that they would provide a major share of revenues to dockside businesses. Crew members are not considered to be small businesses under the Regulatory Flexibility Act. Because the limited entry scheme is based in large part on recent participation in the fishery, it is highly likely that tilefish vessels currently patronizing these businesses will continue to do so, possibly in conjunction with participation in other fisheries. Further, the constant harvest strategy adopted in the FMP should provide for a steadier fishery and income for all concerned. However, NMFS recognizes that limited access could yield negative economic impacts for all entities affected by the final rule. Economic impacts on communities affected by the tilefish fishery were considered by the Council and are addressed in the FMP.

Changes From the Proposed Rule

In § 648.2, a definition of the tilefish management unit is added to distinguish management of the northern portion of the tilefish stock under the FMP, from management of the southern portion of the tilefish stock under the NMFS Southeast Region Snapper/Grouper fisheries.

In § 648.4, paragraph (a)(12) is revised to clarify that tilefish fished for, possessed, or landed in or from the EEZ means tilefish in or from the tilefish management unit.

In § 648.4, paragraph (a)(12)(i) is revised to clarify that the vessel must have landed the specified amounts of tilefish under paragraph (a)(12)(i)(A) within the tilefish management unit to qualify for a limited access tilefish permit.

In § 648.4, paragraph (a)(12)(ii), the title and paragraph (a)(12)(ii)(A) are removed, the subsequent paragraphs (a)(12)(ii)(B) through (M) are redesignated as paragraphs (a)(12)(i)(B) through (M),and the removed title and paragraph language are added to the newly redesignated paragraph (a)(12)(i)(I) (previously reserved).

In § 648.4, the newly redesignated paragraph (a)(12)(i)(M)(*3*)(*ii*) is redesignated paragraph (a)(12)(ii) and revised to clarify the description of eligibility and conditions for issuance of tilefish incidental catch permits and to indicate that vessels with tilefish incidental catch permits may only possess or land tilefish in or from the tilefish management unit.

In § 648.4, the newly redesignated paragraph (a)(12)(i)(M)(*3*)(*i*) is redesignated as the text of paragraph (a)(12)(i)(M)(*3*).

In § 648.4, paragraph (b) is revised to clarify that any vessel owner whose vessel is permitted to fish in the tilefish management unit for the species managed under the FMP must comply with the more restrictive of either state, local or Federal regulations.

In § 648.5, paragraph (a) is revised to clarify that any vessel operators who are fishing for or possessing tilefish taken from the tilefish management unit must have a valid operator permit.

In § 648.7, paragraph (a)(2)(i) is corrected to include tilefish as a species of fish that is not required to be reported by federally permitted dealers through the IVR system.

In § 648.7, paragraph (b)(1)(iv) is corrected by removing paragraphs (b)(1)(iv)(A) and (B), and by revising paragraph (b)(1)(iv) to state that IVR reports must be submitted on a per- trip basis, rather than on a weekly basis.

In § 648.12, the introductory text is corrected to show that tilefish has been redesignated from subpart M to subpart N of 50 CFR part 648. Subpart M has been assigned to the Atlantic Deep-Sea Red Crab Fishery; therefore ''Management Measures for the Tilefish Fishery'' will appear as subpart N.

In § 648.14, paragraphs (x)(11) and (cc)(1), (2), (3), (8), and (9) are modified to clarify that the prohibitions apply to activities dealing with tilefish harvested in or from the tilefish management unit.

In § 648.14, the introductory text of paragraph (cc) is modified to exempt vessels participating in a research activity, as described in § 648.290 (previously § 648.250), from the general prohibitions specified at § 600.725.

In § 648.14, paragraph (cc)(4) is removed because there is no processor permit. Subsequent paragraphs in paragraph (cc) have been renumbered and the comments that follow refer to the renumbered paragraphs.

In § 648.14, paragraph (cc)(6) is revised to include the gear restriction related to other than longline gear.

In § 648.14, paragraphs (cc)(7) and (8) are revised to update the reference.

In § 648.14, paragraph (cc)(9) is added to specify that the landing of tilefish harvested by vessels fishing in U.S. waters in excess of the incidental catch limit is prohibited in the tilefish management unit, unless the vessel holds a limited access tilefish permit.

In subpart N, §§ 648.250 through 648.254 have been redesignated as §§ 648.290 through 648.294, respectively, for consecutive numbering.

In § 648.290 (previously § 648.250), paragraphs (b) and (d) are revised and paragraph (e) is added to allow for the set-aside of up to 3-percent of the tilefish TAL for purposes of compensation for research, consistent with Framework 1.

Section 648.294 (previously § 648.254) has been revised to specify the gear stowage requirements for gear other than longline gear.

Classification

NMFS has determined that the FMP that this rule implements is necessary for the conservation and management of the tilefish fishery and is consistent with the Magnuson-Stevens Act and other applicable laws.

This final rule has been determined to be not significant for purposes of Executive Order 12866.

The Council prepared a FEIS for this FMP; a notice of availability was

published on February 12, 2001 (66 FR 9814). NMFS determined, upon review of the FMP/FEIS and public comments, that approval and implementation of the FMP is preferable to the status quo and other considered alternatives. The FMP contains management measures capable of preventing overfishing; providing economic and social benefits to the fishing industry in the long term; and contributing to enhancement of the ecosystem through a rebuilt tilefish resource.

NMFS prepared a final regulatory flexibility analysis (FRFA) for this action, which complies with Section 604 of the Regulatory Flexibility Act. The FRFA includes the IRFA, comments on the IRFA, responses to those comments as contained in this preamble, and a summary of the analyses done in support of this final rule. The preamble to the proposed rule included a detailed summary of the analyses contained in the IRFA, and that discussion is not repeated in its entirety here. A summary of the FRFA follows:

A description of the reasons why action by the agency is being considered and the objectives of the action are explained in the preamble to the proposed rule and are not repeated here. This action contains reporting and recordkeeping requirements that were analyzed in the IRFA. It will not duplicate, overlap, or conflict with any other Federal rules. This action is taken under authority of the Magnuson-Stevens Act and regulations at 50 CFR part 648.

Public Comments

Three hundred and six comments were submitted during the comment periods on the FMP and proposed rule. The majority of comments were not specifically on the IRFA, but several were related to economic impacts on small entities. The comments and responses are contained in the Comments and Responses section of the preamble of this final rule and are not repeated here. Comments 6, 9, 10, 11, 12, 13, 16, and 17 were specifically directed at the economic consequences of the FMP and, particularly, at the limited entry program and its potential impacts on individual vessels, all of which are small entities.

Number of Small Entities

All of the businesses (fishing vessels, dealers and processors) affected by this final rule are considered small entities. In 1998, 215 different vessels landed tilefish along the Atlantic coast. In 1998, 83 federally permitted seafood dealers handled tilefish. Fewer than three permitted processors reported processing tilefish in 1998 for the Northeast and Southeast Regions combined. Tilefish constituted a very small percentage of their total volume and value of processed products.

Cost of Compliance

It is estimated that, in 1998, 215 different vessels landed tilefish along the Atlantic coast. Under this final rule, any vessel fishing commercially for tilefish must obtain a Federal vessel tilefish permit in order to fish for tilefish in the EEZ. From January 1, 1988, to June 15, 1993, 312 vessels landed at least 1 lb (0.45 kg) of tilefish. Assuming that all these vessels would be eligible for a tilefish permit and that they would all apply, there would be 312 permit applications as a result of this final rule. Overhead costs herein are based on an estimated $15.00 per hour. Annual initial costs for vessel permits are estimated to be $106 ($0.34 per vessel x 312 vessels) for postage and $2,340 ($7.50 per vessel x 312 vessels) for clerical costs. Annual initial costs for dealer permits are estimated to be $3.40 ($0.34 x 10 dealers) for postage and $12.50 ($1.25 per dealer x 10 dealers) for clerical costs. It is estimated that 85 of the vessels expected to apply for an initial vessel permit do not presently possess a Northeast fisheries permit; therefore, for operator permits, an annual cost of $29 ($0.34 per operator x 85 vessels) for postage is expected and an annual cost of $1750 ($15.00 per operator x 85 vessels)for clerical costs is expected. Also, a cost of $850 ($10 per vessel x 85 vessels) is expected for obtaining and displaying vessel identification numbers. About 5 percent of the vessels (5 vessels) applying for the initial vessel permit may also incur additional costs associated with Confirmation of permit history, replacement and upgrades, and permit vessel appeals as follows: $1.70 (0.34 per vessel x 5 vessels) for postage, and $225 ($45.00 x 5 vessels) for clerical costs. Eighty-five vessels currently do not report under the system in place for Northeast permit holders; therefore, annual costs of submitting vessel logbooks are expected to be $347 ($4.08 x 85 vessels) for postage and $1,275 ($15.00 per vessel x 85 vessels) for clerical costs. Annual costs of submitting dealer reports are expected to be $177 ($17.70 per dealer x 10 dealers) for postage and $260 ($26.0 x 10 dealers) for clerical costs.

Minimizing Economic Impacts on Small Entities

The 10-year constant harvest rebuilding strategy using a 50-percent probability of meeting the rebuilding target of 10 years will allow greater landings during the initial years of the FMP implementation than any alternative strategy considered by the Council. For example, the highest constant F strategy (F=.168) would have allowed only 1.299 million lb (589.2 mt) to be landed in fishing year 2001, compared to 1.995 million lb (904.9 mt) resulting from the preferred strategy. Landing levels under status quo for 2001 were projected to be 2.3 million lb (1043 mt) for all permit categories, or 305,000 lb (138 mt) more than the quota under the preferred management option. However, the long-term benefits of the preferred management strategy will likely outweigh the short-term negative economic impacts to all vessels, dealers, and other segments of the industry. At an ex-vessel price of $2.00 per lb ($0.90 per kg) revenues of approximately $600,000 will be foregone in 2001 under the preferred management strategy, though the effects will be disproportionately distributed among the limited access permit categories, due to their different quota allocations. Vessels in the tier 1 full-time category (66 percent), assuming equal landings among vessels within the category, have the potential to be affected the most, followed by part-time vessels (19 percent), tier 2 full-time category vessels (15 percent), and vessels in the incidental catch category (5 percent).

Because tilefish are overfished, the Council determined that it was necessary to limit access into the fishery, not only due to the condition of the stock, but the rate at which the present fishery was harvesting tilefish. The Council further recognized that short-term economic losses for the aggregate of vessels and dealers would result from implementation of severe constraints on harvest. Unfortunately, there is no mechanism to mitigate entirely the aggregate negative short-term impacts of these measures on vessels participating in a limited access fishery.

The FMP maintains present participation in the tilefish fishery, while recognizing that not all vessels will qualify for limited access permits. The FMP allows vessel owners who apply for an individual permit category, to furnish proof of landings, and to appeal if a limited access permit application is denied by NMFS. This allows vessels that did not pre-qualify for permits to apply and qualify for a limited access permit category. Vessels that landed tilefish in the 1980s have an opportunity to participate in the fishery under the part-time permit category if they have the requisite level of landings,

even though they did not appear in the NMFS database.

This final rule contains new collection-of-information requirements and also subjects persons to collection-of-information requirements not contained in the rule. For example, persons obtaining vessel permits under this rule automatically become subject to vessel trip reporting requirements, although the later are not mentioned in this rule. Both types of requirements are subject to the PRA and were approved by the Office of Management and Budget (OMB). The OMB control numbers and the estimated time for a response are as follows:

Tilefish vessel permits, OMB control number 0648–0202 (30 minutes/response).

Tilefish vessel permits renewal, OMB control number 0648–0202 (15 minutes/response).

Tilefish vessel permit appeals, OMB control number 0648–0202 (180 minutes/response).

Tilefish vessel confirmations of permit history, OMB control number 0648–0202 (30 minutes/response).

Tilefish vessel replacements or upgrades, OMB control number 0648–0202 (180 minutes/response).

Operator permits, OMB control number 0648–0202 (60 minutes/response).

Dealer permits, OMB control number 0648–0202 (5 minutes/response).

Annual processor reports, OMB control number 0648–0018 (30 minutes/response).

Vessel trip reports, OMB control number 0648–0212 (5 minutes/response).

IVR system vessel reports, OMB control number 0648–0212 (4 minutes/response).

IVR system dealer reports, OMB control number 0648–0229 (4 minutes/response).

Dealer logbook reports, OMB control number 0648–0229 (2 minutes/response).

Vessel Identification, OMB control number 0648–0350 (45 minutes/response).

The aforementioned response estimates include the time for reviewing instructions, searching existing data sources, gathering and maintaining the data needed, and completing and reviewing the collection of information. Send comments regarding these burden estimates, or any other aspect of this data collection, including suggestions for reducing the burden, to NMFS and OMB (see **ADDRESSES**).

Notwithstanding any other provision of the law, no person is required to respond to, nor shall any person be subject to a penalty for failure to comply with, a collection-of-information subject to the requirements of the PRA, unless that collection of information displays a currently valid OMB control number.

List of Subjects in 50 CFR Part 648

Fisheries, Fishing, Reporting and recordkeeping Requirements.

Dated: September 19, 2001.

William T. Hogarth,

Assistant Administrator for Fisheries, National Marine Fisheries Service.

For the reasons set out in the preamble, 50 CFR part 648 is amended as follows:

PART 648—FISHERIES OF THE NORTHEASTERN UNITED STATES

1. The authority citation for part 648 continues to read as follows:

Authority: 16 U.S.C. 1801 *et seq.*

2. In § 648.1, the first sentence of paragraph (a) is revised to read as follows:

§ 648.1 Purpose and scope.

(a) This part implements the fishery management plans (FMPs) for the Atlantic mackerel, squid, and butterfish fisheries (Atlantic Mackerel, Squid, and Butterfish FMP); Atlantic salmon (Atlantic Salmon FMP); the Atlantic sea scallop fishery (Scallop FMP); the Atlantic surf clam and ocean quahog fisheries (Atlantic Surf Clam and Ocean Quahog FMP); the Northeast multispecies fishery (Multispecies FMP); the monkfish fishery (Monkfish FMP); the summer flounder, scup, and black sea bass fisheries (Summer Flounder, Scup, and Black Sea Bass FMP); the Atlantic bluefish fishery (Atlantic Bluefish FMP); the spiny dogfish fishery (Spiny Dogfish FMP); the Atlantic herring fishery (Atlantic Herring FMP); and the tilefish fishery (Tilefish FMP). * * *

* * * * *

3. In § 648.2, the definition of ''Council'' is revised and new definitions for ''Tilefish FMP Monitoring Committee'' and ''Tilefish Management Unit'' are added in alphabetical order to read as follows:

§ 648.2 Definitions.

* * * * *

Council means the New England Fishery Management Council (NEFMC) for the Atlantic herring, Atlantic sea scallop, monkfish, and NE multispecies fisheries; or the Mid-Atlantic Fishery Management Council (MAFMC) for the Atlantic mackerel, squid, and butterfish; Atlantic surf clam and ocean quahog; summer flounder, scup, and black sea bass; spiny dogfish; Atlantic bluefish; and tilefish fisheries.

* * * * *

Tilefish FMP Monitoring Committee means a committee made up of staff representatives of the MAFMC, the NMFS Northeast Regional Office, the Northeast Fisheries Science Center, up to three state representatives (the New England states having one representative and the Mid-Atlantic states having a maximum of two representatives) and one non-voting industry member. The MAFMC Executive Director or his designee chairs the committee.

*Tilefish Management Unit*means an area of the Atlantic Ocean from the latitude of the VA and NC border (36°33.36′ N. Lat.), extending eastward from the shore to the outer boundary of the exclusive economic zone and northward to the United States-Canada border in which the United States exercises exclusive jurisdiction over all golden tilefish (*Lopholatilus chamaeleonticeps*) fished for, possessed, caught or retained in or from such area.

* * * * *

4. In § 648.4, paragraph (a)(12) is added and paragraph (b) is revised to read as follows:

§ 648.4 Vessel permits.

(a) * * *

(12) Tilefish vessels. Any vessel of the United States must have been issued and carry on board a valid tilefish vessel permit to fish for, possess, or land tilefish in or from the tilefish management unit.

(i)*Limited access tilefish permits*—(A) *Eligibility.* A vessel may be issued a limited access tilefish permit if it meets any of the following limited access tilefish permit criteria, provided that the vessel landed the specified amounts of tilefish to meet such criteria within the tilefish management unit:

(*1*) *Full-time tier 1 category.* The vessel landed at least 250,000 lb (113,430 kg) of tilefish per year for any 3 years between 1993 and 1998, at least 1 lb (2.20 kg) of which was landed prior to June 15, 1993.

(*2*) *Full-time tier 2 category.* The vessel landed at least 30,000 lb (13,612 kg) per year for any of 3 years between 1993 and 1998, at least 1 lb (2.20 kg) of which was landed prior to June 15, 1993.

(*3*) *Part-time category.* The vessel landed 10,000 lb (4,537 kg) of tilefish in any 1 year between 1988 and 1993 and 10,000 lb (4,537 kg) in any 1 year between 1994 and 1998, or landed 28,000 lb (12,904 kg) of tilefish in any 1 year between 1984 and 1993, at least

1 lb (2.20 kg) of which was landed prior to June 15, 1993.

(B) *Application/renewal restriction*—(*1*) *Initial application.* A vessel owner must apply for an initial limited access tilefish permit before November 1, 2002, one year from the effective date of the regulations.

(*2*) For fishing years beyond the initial application year, the provisions of paragraph (a)(1)(i)(B) of this section apply.

(C) *Qualification restrictions.* The provisions of paragraph (a)(1)(i)(C) of this section apply.

(D) *Change in ownership.* The provisions of paragraph (a)(1)(i)(D) of this section apply.

(E) *Replacement vessels.* The provisions of paragraph (a)(1)(i)(E) of this section apply.

(F) *Upgraded vessel.* The provisions of paragraph (a)(1)(i)(F) of this section apply.

(G) *Consolidation restriction.* The provisions of paragraph (a)(1)(i)(G) of this section apply.

(H) *Vessel baseline specifications.* The provisions of paragraph (a)(1)(i)(H) of this section apply.

(I) *Limited access permit restrictions.* (*1*) A vessel may be issued a limited access tilefish permit for only one category during a fishing year.

(*2*) A vessel issued a limited access tilefish permit may not be issued an incidental catch tilefish permit during a fishing year.

(J) *Confirmation of permit history.* The provisions of paragraph (a)(1)(i)(J) of this section apply.

(K) Abandonment or voluntary relinquishment of permits. The provisions of paragraph (a)(1)(i)(K) of this section apply.

(L) *Restriction on permit splitting.* The provisions of paragraph (a)(1)(i)(L) of this section apply.

(M) *Appeal of denial of a permit.* (*1*) Any applicant denied a tilefish limited access permit may appeal to the Regional Administrator within 30 days of the notice of denial. Any such appeal shall be in writing. The only ground for appeal is that the Regional Administrator erred in concluding that the vessel did not meet the criteria in paragraphs (a)(12)(i)(A)(*1*),(*2*), or (*3*) of this section. The appeal must set forth the basis for the applicant's belief that the decision of the Regional Administrator was made in error.

(*2*) The appeal may be presented, at the option of the applicant, at a hearing before an officer appointed by the Regional Administrator. The hearing officer shall make a recommendation to the Regional Administrator. The decision on the appeal by the Regional Administrator is the final decision of the Department of Commerce.

(*3*) Status of vessels pending appeal. A vessel denied a limited access tilefish permit may fish, provided that the denial has been appealed, the appeal is pending, and the vessel has on board a letter from the Regional Administrator authorizing the vessel to fish. The Regional Administrator will issue such a letter for the pendency of any appeal. The decision on the appeal is the final administrative action of the Department of Commerce. The letter of authorization must be carried on board the vessel. If the appeal is finally denied, the Regional Administrator shall send a notice of final denial to the vessel owner; the authorizing letter shall become invalid 5 days after receipt of the notice of denial.

(ii) *Tilefish incidental catch permit.* A vessel of the United States that is subject to these regulations and that has not been issued a limited access tilefish permit is eligible for and may be issued a tilefish incidental catch permit to possess or land tilefish in or from the tilefish management unit. Such vessel is subject to the restrictions in § 648.252.

(b) *Permit conditions.* Any person who applies for a fishing permit under this section must agree, as a condition of the permit, that the vessel and the vessel's fishing activity, catch, and pertinent gear (without regard to whether such fishing occurs in the EEZ or landward of the EEZ; and without regard to where such fish or gear are possessed, taken, or landed), are subject to all requirements of this part, unless exempted from such requirements under this part. All such fishing activities, catch, and gear will remain subject to all applicable state requirements. Except as otherwise provided in this part, if a requirement of this part and a management measure required by a state or local law differ, any vessel owner permitted to fish in the EEZ for any species except tilefish managed under this part must comply with the more restrictive requirement. Except as otherwise provided in this part, if a requirement of this part and a management measure required by a state or local law differ, any vessel owner permitted to fish in the tilefish management unit for tilefish managed under this part must comply with the more restrictive requirement. Owners and operators of vessels fishing under the terms of a summer flounder moratorium, scup moratorium, or black sea bass moratorium or a spiny dogfish, or bluefish commercial vessel permit must also agree not to land summer flounder, scup, black sea bass, spiny dogfish, or bluefish, respectively, in any state after NMFS has published a notification in the Federal Register stating that the commercial quota for that state or period has been harvested and that no commercial quota is available for the respective species. A state not receiving an allocation of summer flounder, scup, black sea bass, or bluefish, either directly or through a coast-wide allocation, is deemed to have no commercial quota available. Owners and operators of vessels fishing under the terms of the tilefish limited access permit must agree not to land tilefish after NMFS has published a notification in the Federal Register stating that the quota for the tilefish limited access category under which a vessel is fishing, has been harvested. Owners or operators fishing for surf clams and ocean quahogs within waters under the jurisdiction of any state that requires cage tags are not subject to any conflicting Federal minimum size or tagging requirements. If a surf clam and ocean quahog requirement of this part differs from a surf clam and ocean quahog management measure required by a state that does not require cage tagging, any vessel owners or operators permitted to fish in the EEZ for surf clams and ocean quahogs must comply with the more restrictive requirement while fishing in state waters. However, surrender of a surf clam and ocean quahog vessel permit by the owner by certified mail addressed to the Regional Administrator allows an individual to comply with the less restrictive state minimum size requirement, as long as fishing is conducted exclusively within state waters. If the commercial black sea bass quota for a period is harvested and the coast is closed to the possession of black sea bass north of 35°15.3′ N. lat., any vessel owners who hold valid commercial permits for both the black sea bass and the NMFS Southeast Region Snapper-Grouper fisheries may surrender their moratorium black sea bass permit by certified mail addressed to the Regional Administrator and fish pursuant to their snapper-grouper permit, as long as fishing is conducted exclusively in waters, and landings are made, south of 35°15.3′ N. lat. A moratorium permit for the black sea bass fishery that is voluntarily relinquished or surrendered will be reissued upon receipt of the vessel owner's written request after a minimum period of 6 months from the date of cancellation.

* * * * *

5. In § 648.5, the first sentence in paragraph (a) is revised to read as follows:

§ 648.5 Operator permits.

(a) *General.* Any operator of a vessel fishing for or possessing Atlantic sea scallops in excess of 40 lb (18.1 kg), NE multispecies, spiny dogfish, monkfish, Atlantic herring, Atlantic surf clam, ocean quahog, Atlantic mackerel, squid, butterfish, scup, black sea bass, or bluefish harvested in or from the EEZ, or tilefish harvested in or from the tilefish management unit, or issued a permit, including carrier and processing permits, for these species under this part, must have been issued under this section, and carry on board, a valid operator permit. * * *

* * * * *

6. In § 648.6, paragraph (a)(1) is revised to read as follows:

§ 648.6 Dealer/processor permits.

(a)*General.* (1) All dealers of NE multispecies, monkfish, Atlantic herring, Atlantic sea scallop, spiny dogfish, summer flounder, Atlantic surf clam, ocean quahog, Atlantic mackerel, squid, butterfish, scup, bluefish, tilefish, and black sea bass; Atlantic surf clam and ocean quahog processors; and Atlantic herring processors or dealers, as described in § 648.2; must have been issued under this section, and have in their possession, a valid permit or permits for these species. A person who meets the requirements of both the dealer and processor definitions of any of the aforementioned species' fishery regulations may need to obtain both a dealer and a processor permit, consistent with the requirements of that particular species' fishery regulations. Persons aboard vessels receiving small-mesh multispecies and/or Atlantic herring at sea for their own use exclusively as bait are deemed not to be dealers, and are not required to possess a valid dealer permit under this section, for purposes of receiving such small-mesh multispecies and/or Atlantic herring, provided the vessel complies with the provisions of § 648.13.

* * * * *

7. In 648.7, the first sentence of paragraph (a)(2)(i) is revised and paragraph (b)(1)(iv) is added to read as follows:

§ 648.7 Recordkeeping and reporting requirements.

(a) * * *

(2) * * *

(i) Federally permitted dealers, other than Atlantic herring and tilefish dealers, purchasing quota-managed species not deferred from coverage by the Regional Administrator pursuant to paragraph (a)(2)(ii) of this section must submit, within the time period specified in paragraph (f) of this section, the following information, and any other information required by the Regional Administrator, to the Regional Administrator or to an official designee, via the IVR system established by the Regional Administrator: Dealer permit number; dealer code; pounds purchased, by species, other than Atlantic herring and tilefish; reporting week in which species were purchased; and state of landing for each species purchased. * * *

* * * * *

(b) * * *

(1) * * *

(iv) The owner or operator of any vessel issued a limited access permit for tilefish must submit a tilefish catch report via the IVR system within 24 hours after returning to port and offloading as required by the Regional Administrator. The report shall include at least the following information, and any other information required by the Regional Administrator: Vessel identification, trip during which species are caught, and pounds landed. IVR reporting does not exempt the owner or operator from other applicable reporting requirements of § 648.7.

* * * * *

8. In § 648.11, the first sentence of paragraph (a) and paragraph (e) are revised to read as follows:

§ 648.11 At-sea sampler/observer coverage.

(a) The Regional Administrator may request any vessel holding a permit for Atlantic sea scallops, NE multispecies, monkfish, Atlantic mackerel, squid, butterfish, scup, black sea bass, bluefish, spiny dogfish, Atlantic herring, tilefish; or a moratorium permit for summer flounder; to carry a NMFS-approved sea sampler/observer. * * *

* * * * *

(e) The owner or operator of a vessel issued a summer flounder moratorium permit, a scup moratorium permit, a black sea bass moratorium permit, a bluefish permit, a spiny dogfish permit, an Atlantic herring permit, or a tilefish permit, if requested by the sea sampler/observer, also must:

(1) Notify the sea sampler/observer of any sea turtles, marine mammals, summer flounder, scup, black sea bass, bluefish, spiny dogfish, Atlantic herring, tilefish, or other specimens taken by the vessel.

(2) Provide the sea sampler/observer with sea turtles, marine mammals, summer flounder, scup, black sea bass, bluefish, spiny dogfish, Atlantic herring, tilefish, or other specimens taken by the vessel.

* * * * *

9. In § 648.12, the introductory text is revised to read as follows:

§ 648.12 Experimental fishing.

The Regional Administrator may exempt any person or vessel from the requirements of subparts A (General Provisions), B (Atlantic mackerel, squid, and butterfish), D (sea scallop), E (surf clam and ocean quahog), F (NE multispecies and monkfish), G (summer flounder), H (scup), I (black sea bass), J (bluefish), K (Atlantic herring), L (spiny dogfish), M (deep-sea red crab), and N (tilefish) of this part for the conduct of experimental fishing beneficial to the management of the resources or fishery managed under that subpart. The Regional Administrator shall consult with the Executive Director of the MAFMC regarding such exemptions for the Atlantic mackerel, squid, butterfish, summer flounder, scup, black sea bass, spiny dogfish, bluefish, and tilefish fisheries.

* * * * *

10. In § 648.14, paragraphs (x)(11) and (cc) are added to read as follows:

§ 648.14 Prohibitions.

* * * * *

(x) * * *

(11)*Tilefish.* All tilefish retained or possessed on a vessel issued any permit under § 648.4 are deemed to have been harvested in or from the tilefish management unit, unless the preponderance of all submitted evidence demonstrates that such tilefish were harvested by a vessel fishing exclusively in state waters.

* * * * *

(cc) In addition to the general prohibitions specified in § 600.725 of this chapter, unless participating in a research activity as described in § 648.290(e), it is unlawful for any person owning or operating a vessel to do any of the following:

(1) Fish for, possess, retain or land tilefish, unless:

(i) The tilefish are being fished for or were harvested in or from the tilefish management unit by a vessel holding a valid tilefish permit under this part, and the operator on board such vessel has been issued an operator permit that is on board the vessel; or

(ii) The tilefish were harvested by a vessel not issued a tilefish permit that was fishing exclusively in state waters; or

(iii) The tilefish were harvested in or from the tilefish management unit by a vessel engaged in recreational fishing.

(2) Operate, or act as an operator of, a vessel with a tilefish permit, or a vessel fishing for or possessing tilefish in or from the tilefish management unit, unless the operator has been issued, and is in possession of, a valid operator permit.

(3) Purchase, possess, receive, or attempt to purchase, possess, or receive, as a dealer, or in the capacity of a dealer, tilefish that were harvested in or from the tilefish management unit, without having been issued, and in possession of, a valid tilefish dealer permit.

(4) Sell, barter, trade, or otherwise transfer, or attempt to sell, barter, trade, or otherwise transfer, for a commercial purpose, any tilefish, unless the vessel has been issued a tilefish permit, or unless the tilefish were harvested by a vessel without a tilefish permit that fished exclusively in state waters.

(5) Purchase, possess, or receive, for a commercial purpose, or attempt to purchase, possess, or receive, for a commercial purpose, tilefish caught by a vessel without a tilefish permit, unless the tilefish were harvested by a vessel without a tilefish permit that fished exclusively in state waters.

(6) Fish for tilefish, with any other than longline gear, while in possession of a limited access permit, as specified in § 648.294.

(7) Possess tilefish harvested in or from the tilefish management unit in excess of the trip limit, pursuant to § 648.292, unless issued a limited access tilefish permit.

(8) Land tilefish harvested in or from the tilefish management unit for sale after the effective date of the notification in the **Federal Register**, pursuant to § 648.291, which notifies permit holders in a limited access category that the quota for that category is no longer available.

(9) Land tilefish in or from the tilefish management unit, in excess of the trip limit pursuant to § 648.292, unless the vessel holds a valid limited access tilefish permit.

11. In 50 CFR part 648, subpart N is added to read as follows:

Subpart N—Management Measures for the Tilefish Fishery

Sec.

648.290 Catch quotas and other restrictions.
648.291 Closures.
648.292 Tilefish trip limits.
648.293 Framework specifications.
648.294 Gear restrictions.

Subpart N—Management Measures for the Tilefish Fishery

§ 648.290 Catch quotas and other restrictions.

The fishing year is the 12-month period beginning with November 1, 2001.

(a) *Total allowable landings (TAL).* The TAL for each fishing year will be 1.995 million lb (905,172 kg) unless modified pursuant to paragraph (d) of this section.

(b) *TAL allocation.* For each fishing year, up to 3 percent of the TAL may be set aside for the purpose of funding research. Once a research TAC, if any, is set aside, the TAL will first be reduced by 5 percent to adjust for the incidental catch. The remaining TAL will be allocated as follows: Full-time tier Category 1, 66 percent; Full-time tier Category 2, 15 percent; and Part-time, 19 percent.

(c) *Adjustments to the quota.* Any overages of the quota for any limited access category that occur in a given fishing year will be subtracted from the quota for that category in the following fishing year. If incidental harvest exceeds 5 percent of the TAL for a given fishing year, the trip limit of 300 lb (138 kg) for the incidental category may be reduced in the following year. If an adjustment is required, a notification of adjustment of the quota will be published in the **Federal Register**.

(d) *Annual specification process.* The Tilefish FMP Monitoring Committee (Monitoring Committee) will meet after the completion of each stock assessment or at the request of the Council Chairman. The Monitoring Committee shall review tilefish landings information and any other relevant available data to determine if the annual quota requires modification to respond to any changes to the stock's biological reference points or to ensure that the rebuilding schedule is maintained. The Monitoring Committee will consider whether any additional management measures or revisions to existing measures are necessary to ensure that the TAL will not be exceeded. Based on that review, the Monitoring Committee will provide a recommendation to the Tilefish Committee of the Council. Based on these recommendations and any public comment received, the Tilefish Committee shall recommend to the Council the appropriate quota and management measures for the next fishing year. The Council shall review these recommendations and any public comments received, and recommend to the Regional Administrator, at least 120 days prior to the beginning of the next fishing year, the appropriate TAL for the next fishing year, the percentage of TAL allocated to research quota, and any management measures to assure that the TAL will not be exceeded. The Council's recommendations must include supporting documentation, as appropriate, concerning the environmental and economic impacts of the recommendations. The Regional Administrator shall review these recommendations, and after such review, NMFS will publish a proposed rule in the **Federal Register** specifying the annual TAL and any management measures to assure that the TAL will not be exceeded. After considering public comments, NMFS will publish a final rule in the **Federal Register** to implement a TAL and any management measures. The previous year's specifications will remain effective unless revised through the specification process and/or the research quota process described in paragraph (e) of this section. NMFS will issue notification in the **Federal Register** if the previous year's specifications will not be changed.

(e) *Research quota.* See § 648.21(g).

§ 648.291 Closures.

(a) *EEZ closure.* If the Regional Administrator determines that the quota for a certain limited access category will be exceeded, the Regional Administrator will close the EEZ to fishing for tilefish by those vessels in that category for the remainder of the fishing year and publish notification in the **Federal Register**.

(b) [Reserved]

§ 648.292 Tilefish trip limits.

Any U.S. fishing vessel fishing under a tilefish incidental catch category permit is prohibited from possessing more than 300 lb (138 kg) of tilefish per trip.

§ 648.293 Framework specifications.

(a) *Within-season management action.* The Council may, at any time, initiate action to add or adjust management measures if it finds that action is necessary to meet or be consistent with the goals and objectives of the Tilefish FMP.

(1) *Specific management measures.* The following specific management measures may be implemented or adjusted at any time through the framework process:

(i) Minimum fish size,
(ii) Minimum hook size,
(iii) Closed seasons,
(iv) Closed areas,
(v) Gear restrictions or prohibitions,
(vi) Permitting restrictions,
(vii) Gear limits,

(viii) Trip limits,

(ix) Overfishing definition and related thresholds and targets,

(x) Annual specification quota setting process,

(xi) Tilefish FMP Monitoring Committee composition and process,

(xii) Description and identification of EFH,

(xiii) Fishing gear management measures that impact EFH,

(xiv) Habitat areas of particular concern, and

(xv) Set-aside quotas for scientific research.

(2) *Adjustment process.* If the Council determines that an adjustment to management measures is necessary to meet the goals and objectives of the FMP, it will recommend, develop, and analyze appropriate management actions over the span of at least two Council meetings. The Council will provide the public with advance notice of the availability of the recommendation, appropriate justifications and economic and biological analyses, and opportunity to comment on the proposed adjustments prior to and at the second Council meeting on that framework action. After developing management actions and receiving public comment, the Council will submit the recommendation to the Regional Administrator; the recommendation must include supporting rationale, an analysis of impacts, and a recommendation on whether to publish the management measures as a final rule.

(3) *Council recommendation.* After developing management actions and receiving public testimony, the Council will make a recommendation to the Regional Administrator. The Council's recommendation must include supporting rationale and, if management measures are recommended, an analysis of impacts and a recommendation to the Regional Administrator on whether to issue the management measures as a final rule. If the Council recommends that the management measures should be issued as a final rule, it must consider at least the following factors and provide support and analysis for each factor considered:

(i) Whether the availability of data on which the recommended management measures are based allows for adequate time to publish a proposed rule, and whether regulations have to be in place for an entire harvest/fishing season.

(ii) Whether there has been adequate notice and opportunity for participation by the public and members of the affected industry in the development of the Council's recommended management measures.

(iii) Whether there is an immediate need to protect the resource.

(iv) Whether there will be a continuing evaluation of management measures adopted following their implementation as a final rule.

(4) *Regional Administrator action.* If the Council's recommendation includes adjustments or additions to management measures and, after reviewing the Council's recommendation and supporting information:

(i) If the Regional Administrator concurs with the Council's recommended management measures and determines that the recommended management measures should be issued as a final rule based on the factors specified in paragraph (b)(2) of this section, the measures will be issued as a final rule in the **Federal Register**.

(ii) If the Regional Administrator concurs with the Council's recommendation and determines that the recommended management measures should be published first as a proposed rule, the measures will be published as a proposed rule in the **Federal Register**. After additional public comment, if the Regional Administrator concurs with the Council's recommendation, the measures will be issued as a final rule in the **Federal Register**.

(iii) If the Regional Administrator does not concur with the Council's recommendation, the Council will be notified in writing of the reasons for the non-concurrence.

(b) *Emergency action.* Nothing in this section is meant to derogate from the authority of the Secretary to take emergency action under section 305(e) of the Magnuson-Stevens Act.

§ 648.294 Gear restrictions.

A vessel issued a limited access tilefish permit issued under § 648.4(a)(12)(i) cannot fish for tilefish with any gear other than longline, or possess gear other than longline gear unless properly stowed in accordance with § 648.23.

[FR Doc. 01–24117 Filed 9–25–01; 8:45 am]

BILLING CODE 3510–22–S

DEPARTMENT OF COMMERCE

National Oceanic and Atmospheric Administration

50 CFR Part 679

[Docket No. 010112013-1013-01; I.D. 091701A]

Fisheries of the Exclusive Economic Zone Off Alaska; Reallocation of Pollock

AGENCY: National Marine Fisheries Service (NMFS), National Oceanic and Atmospheric Administration (NOAA), Commerce.

ACTION: Reallocation.

SUMMARY: NMFS is reallocating projected unused amounts of Bering Sea subarea (BS) pollock from the incidental catch account to the directed fisheries. This action is necessary to allow the 2001 total allowable catch (TAC) of pollock to be harvested.

DATES: Effective September 20, 2001 until 2400 hrs, A.l.t., December 31, 2001.

FOR FURTHER INFORMATION CONTACT: Andrew Smoker, 907-586-7228.

SUPPLEMENTARY INFORMATION: NMFS manages the groundfish fishery in the BSAI according to the Fishery Management Plan for the Groundfish Fishery of the Bering Sea and Aleutian Islands Area (FMP) prepared by the North Pacific Fishery Management Council under authority of the Magnuson-Stevens Fishery Conservation and Management Act. Regulations governing fishing by U.S. vessels in accordance with the FMP appear at subpart H of 50 CFR part 600 and 50 CFR part 679.

In accordance with § 679.20(a)(5)(i)(C)(*1*) and the American Fisheries Act (AFA) (Public Law 105-277, Division C, Title II), NMFS specified a pollock incidental catch allowance equal to 4 percent of the pollock TAC after subtraction of the 10 percent Community Development Quota reserve in the Final 2001 Harvest Specifications and Associated Management Measures for the Groundfish Fisheries Off Alaska (66 FR 7276, January 22, 2001,and 66 FR 37167, July 17, 2001).

As of August 25, 2001, the Administrator, Alaska Region, NMFS (Regional Administrator), has determined that approximately 24,910 metric tons (mt) of pollock remain in the incidental catch account. Based on projected harvest rates of other groundfish species and the expected bycatch of pollock in those fisheries, the

Regional Administrator has determined that 12,000 mt of pollock specified in the incidental catch account will not be necessary as incidental catch. Therefore, NMFS is apportioning the projected unused amount, 12,000 mt, of pollock from the incidental catch account to the directed fishing allowances established at § 679.20(a)(5)(i)(C)(*2*). This transfer will increase the allocation to catcher vessels harvesting pollock for processing by the inshore component by 6,000 mt, to catcher/processors and catcher vessels harvesting pollock for processing by catcher processors in the offshore component by 4,800 mt and to catcher vessels harvesting pollock for processing by motherships in the offshore component by 1,200 mt. Pursuant to § 679.20(a)(5)(i)(C)(**2**)(*ii*), no less than 8.5 percent of the 4,800 mt allocated to catcher processors in the offshore component, 408 mt, will be available for harvest only by eligible catcher vessels delivering to listed catcher processors.

Pursuant to § 679.20(a)(5)(i)(C)(*3*), Table 1 revises the final 2001 BS subarea allocations to include the seven inshore catcher vessel pollock cooperatives that have been approved and permitted by NMFS for the 2001 fishing year consistent with this reallocation.

TABLE 1. BERING SEA SUBAREA INSHORE COOPERATIVE ALLOCATIONS

Cooperative name and member vessels	Sum of member vessel's official catch histories[1]	Percentage of inshore sector allocation	Annual co-op allocation
Akutan Catcher Vessel Association ALDEBARAN, ARCTURUS, BLUE FOX, CAPE KIWANDA, COLUMBIA, DOMINATOR, DONA MARTITA, EXODUS, GLADIATOR, GOLDEN DAWN, GOLDEN PISCES, HAZEL LORRAINE, INTREPID EXPLORER, LESLIE LEE, LISA MELINDA, MAJESTY, MARCY J, MARGARET LYN, NORDIC EXPLORER, NORTHERN PATRIOT, NORTHWEST EXPLORER, PACIFIC RAM, PACIFIC VIKING, PEGASUS, PEGGIE JO, PERSEVERANCE, PREDATOR, RAVEN, ROYAL AMERICAN, SEEKER, SOVEREIGNTY, TRAVELER, VIKING EXPLORER	249,800	28.682%	175,187
Arctic Enterprise Association ARCTIC EXPLORER, BRISTOL EXPLORER, OCEAN EXPLORER, PACIFIC EXPLORER	51,022	5.858%	35,782
Northern Victor Fleet Cooperative ANITA J, NORDIC FURY, PACIFIC FURY, GOLDRUSH, EXCALIBUR II, HALF MOON BAY, SUNSET BAY, COMMODORE, STORM PETREL, POSEIDON, ROYAL ATLANTIC, MISS BERDIE	72,517	8.326%	50,857
Peter Pan Fleet Cooperative AMBER DAWN, AMERICAN BEAUTY, ELIZABETH F, MORNING STAR, OCEANIC, OCEAN LEADER, TOPAZ, WALTER N, PROVIDIAN	15,347	1.762%	10,763
Unalaska Cooperative ALASKA ROSE, BERING ROSE, DESTINATION, GREAT PACIFIC, MESSIAH, MORNING STAR, MS AMY, PROGRESS, SEA WOLF, VANGUARD, WESTERN DAWN	106,737	12.255%	74,856
UniSea Fleet Cooperative ALSEA, AMERICAN EAGLE, ARGOSY, AURIGA, AURORA, DEFENDER, GUN-MAR, NORDIC STAR, PACIFIC MONARCH, SEADAWN, STARFISH, STARLITE, STARWARD	212,608	24.411%	149,104
Westward Fleet Cooperative A.J., ALASKAN COMMAND, ALYESKA, ARCTIC WIND, CAITLIN ANN, CHELSEA K, HICKORY WIND, FIERCE ALLEGIANCE, OCEAN HOPE 3, PACIFIC CHALLENGER, PACIFIC KNIGHT, PACIFIC PRINCE, VIKING, WESTWARD I	160,257	18.400%	112,390
Open access AFA vessels	2,652	0.304%	1,861
Total inshore allocation	870,941	100%	610,800

[1]Under § 679.62(e)(1) the individual catch history for each vessel is equal to the vessel's best 2 of 3 years inshore pollock landings from 1995 through 1997 and includes landings to catcher/processors for vessels that made 500 or more mt of landings to catcher/processors from 1995 through 1997.

Classification

This action responds to the best available information recently obtained from the fishery. The Assistant Administrator for Fisheries, NOAA, finds that the need to immediately implement this action in order to allow full utilization of the pollock TAC constitutes good cause to waive the requirement to provide prior notice opportunity for public comment pursuant to the authority set forth at 5 U.S.C. 553(b)(3)(B) and 50 CFR 679.20(b)(3)(iii)(A), as such procedures would be unnecessary and contrary to the public interest. Similarly, the need to implement these measures in a timely fashion in order to allow full utilization of the pollock TAC constitutes good cause to find that the effective date of this action cannot be delayed for 30 days. Accordingly, under 5 U.S.C. 553(d), a delay in the effective date is hereby waived.

This action is taken under 50 CFR 679.20, and is exempt from review under Executive Order 12866.

Authority: 16 U.S.C. 1801 *et seq.*

Dated: September 20, 2001.

Bruce C. Morehead,

Acting Director, office of Sustainable Fisheries, Nationa Marine Fisheries Service.

[FR Doc. 01–23996 Filed 9–20–01; 4:48 pm]

BILLING CODE 3510–22–S

Proposed Rules

Federal Register
Vol. 66, No. 187
Wednesday, September 26, 2001

This section of the FEDERAL REGISTER contains notices to the public of the proposed issuance of rules and regulations. The purpose of these notices is to give interested persons an opportunity to participate in the rule making prior to the adoption of the final rules.

DEPARTMENT OF TRANSPORTATION

Federal Aviation Administration

14 CFR Part 39

[Docket No. 99–CE–85–AD]

RIN 2120–AA64

Airworthiness Directives; EXTRA Flugzeugbau GmbH Models EA–300, EA–300L, and EA–300S Airplanes

AGENCY: Federal Aviation Administration, DOT.

ACTION: Notice of proposed rulemaking (NPRM).

SUMMARY: This document proposes to adopt a new airworthiness directive (AD) that would apply to certain EXTRA Flugzeugbau GmbH (EXTRA) Models EA–300, EA–300L, and EA–300S airplanes. The proposed AD would require (for all affected airplanes) an inspection of the upper longeron at the horizontal stabilizer attachment for cracks using a fluorescent dye check penetrant method, repair of any cracks found, and modification of the horizontal stabilizer. The proposed AD would require a limit on operation to the Normal category until accomplishment of the initial inspection and modification on airplanes with less than 200 hours time-in-service (TIS). The proposed AD is the result of reports of fatigue cracks at the horizontal stabilizer attachment on the affected airplanes. The actions specified by the proposed AD are intended to detect and correct cracks in the horizontal stabilizer attachment, which could result in structural failure of the aft fuselage with consequent loss of control of the airplane.

DATES: The Federal Aviation Administration (FAA) must receive any comments on this proposed rule on or before October 31, 2001.

ADDRESSES: Submit comments to FAA, Central Region, Office of the Regional Counsel, Attention: Rules Docket No. 99–CE–85–AD, 901 Locust, Room 506, Kansas City, Missouri 64106. You may view any comments at this location between 8 a.m. and 4 p.m., Monday through Friday, except Federal holidays.

You may get service information that applies to this proposed AD from EXTRA Flugzeugbau GmbH, Flugplatz Dinslaken, D–46569 Hünxe, Federal Republic of Germany; telephone: (0 28 58) 91 37–00; facsimile: (0 28 58) 91 37–30. You may also view this information at the Rules Docket at the address above.

FOR FURTHER INFORMATION CONTACT: Karl Schletzbaum, Aerospace Engineer, FAA, Small Airplane Directorate, 901 Locust, Room 301, Kansas City, Missouri 64106; telephone: (816) 329–4146; facsimile: (816) 329–4090.

SUPPLEMENTARY INFORMATION:

Comments Invited

How Do I Comment on This Proposed AD?

The FAA invites comments on this proposed rule. You may submit whatever written data, views, or arguments you choose. You need to include the rule's docket number and submit your comments to the address specified under the caption **ADDRESSES.** We will consider all comments received on or before the closing date. We may amend this proposed rule in light of comments received. Factual information that supports your ideas and suggestions is extremely helpful in evaluating the effectiveness of this proposed AD action and determining whether we need to take additional rulemaking action.

Are There Any Specific Portions of This Proposed AD I Should Pay Attention to?

FAA specifically invites comments on the overall regulatory, economic, environmental, and energy aspects of this proposed rule that might suggest a need to modify the rule. You may view all comments we receive before and after the closing date of the rule in the Rules Docket. We will file a report in the Rules Docket that summarizes each contact we have with the public that concerns the substantive parts of this proposed AD.

How Can I Be Sure FAA Receives My Comment?

If you want us to acknowledge the receipt of your comments, you must include a self-addressed, stamped postcard. On the postcard, write ''Comments to Docket No. 99–CE–85–AD.'' We will date stamp and mail the postcard back to you.

Discussion

What Events Have Caused This Proposed AD?

On October 17, 1997, FAA issued a Special Airworthiness Information Bulletin (SAIB) to recommend an inspection of the horizontal stabilizer attachment on EXTRA Models EA–300, EA–300L, and EA–300S airplanes. The SAIB recommended compliance with EXTRA Service Bulletin SB–300–2–95.

The Luftfahrt-Bundesamt (LBA), which is the airworthiness authority for Germany, did not consider the actions of the service bulletin mandatory and consequently did not issue an AD against airplanes on the German register. The FAA also did not issue an AD at this time because the service history did not warrant such action.

Since that time, FAA has received information that indicates fatigue cracks at the horizontal stabilizer attachment are occurring on the above-referenced airplanes. These airplanes are utilized in aerobatic maneuvers and the stress in the area of the horizontal stabilizer can lead to cracks in this area, as well as in the upper longerons and diagonal braces.

What Are the Consequences if the Condition Is Not Corrected?

This condition, if not corrected, could lead to structural failure of the aft fuselage with consequent loss of control of the airplane.

Is There Service Information That Applies to This Subject?

As indicated above, EXTRA Service Bulletin SB–300–2–95 pertains to this subject. EXTRA has since revised Service Bulletin No. 300–2–95 (pages 2–6 at Issue: C, dated July 15, 1998; and pages 1 and 7 through 11 at Issue: D, dated January 30, 2001).

What Action Did LBA Take?

As of the issue date of this NPRM, LBA has not taken AD action on this subject.

The FAA's Determination and an Explanation of the Provisions of the Proposed AD

What Has FAA Decided?

After examining the circumstances and reviewing all available information

related to the incidents described above, including the referenced service information, we have determined that:

—The unsafe condition referenced in this document exists or could develop on other EXTRA Models EA–300, EA–300L, and EA–300S airplanes of the same type design registered in the United States; and

—AD action should be taken in order to detect and correct cracks in the horizontal stabilizer attachment, which could result in structural failure of the aft fuselage with consequent loss of control of the airplane.

What Would the Proposed AD Require?

This proposed AD would require:

—For all affected airplanes: an inspection of the upper longeron at the horizontal stabilizer attachment for cracks using a fluorescent dye check penetrant method, repair of any cracks found, and modification of the horizontal stabilizer; and

—On airplanes with less than 200 hours time-in-service (TIS) as of the effective date of the proposed AD: a limit on operation to the Normal category until accomplishment of the initial inspection and modification.

Accomplishment of the actions specified in the proposed AD would be in accordance with the instructions included in the proposed AD and as specified in the applicable service manual.

Cost Impact

How Many Airplanes Would the Proposed AD Impact?

We estimate that the proposed AD affects 55 airplanes in the U.S. registry.

What Would Be the Cost Impact of the Proposed AD on Owners/Operators of the Affected Airplanes?

We estimate the following costs to accomplish the proposed inspection:

Labor cost	Parts cost	Total cost per airplane	Total cost on U.S. operators
24 workhours × $60 per hour = $1,440 ...	Not Applicable	$1,440 per airplane	$1,440 × 55 airplanes = $79,200.

We estimate the following costs to accomplish the proposed modification:

20 workhours × $60 per hour = $1,200 ...	Provided at no cost	$1,200 per airplane	$1,200 × 55 airplanes = $66,000.

We estimate the following costs to accomplish any necessary repair or replacement that would be required based on the results of the proposed inspection. We have no way of determining the number of airplanes that may need such repair or replacement:

Labor cost	Parts cost	Total cost per airplane
40 workhours × $60 per hour = $2,400	Parts provided at no cost	$2,400 per airplane.

Regulatory Impact

Would This Proposed AD Impact Various Entities?

The regulations proposed herein would not have a substantial direct effect on the States, on the relationship between the national government and the States, or on the distribution of power and responsibilities among the various levels of government. Therefore, it is determined that this proposed rule would not have federalism implications under Executive Order 13132.

Would This Proposed AD Involve a Significant Rule or Regulatory Action?

For the reasons discussed above, I certify that this proposed action (1) is not a ''significant regulatory action'' under Executive Order 12866; (2) is not a ''significant rule'' under DOT Regulatory Policies and Procedures (44 FR 11034, February 26, 1979); and (3) if promulgated, will not have a significant economic impact, positive or negative, on a substantial number of small entities under the criteria of the Regulatory Flexibility Act. A copy of the draft regulatory evaluation prepared for this action has been placed in the Rules Docket. A copy of it may be obtained by contacting the Rules Docket at the location provided under the caption **ADDRESSES**.

List of Subjects in 14 CFR Part 39

Air transportation, Aircraft, Aviation safety, Safety.

The Proposed Amendment

Accordingly, under the authority delegated to me by the Administrator, the Federal Aviation Administration proposes to amend part 39 of the Federal Aviation Regulations (14 CFR part 39) as follows:

PART 39—AIRWORTHINESS DIRECTIVES

1. The authority citation for part 39 continues to read as follows:

Authority: 49 U.S.C. 106(g), 40113, 44701.

§ 39.13 [Amended]

2. FAA amends § 39.13 by adding a new airworthiness directive (AD) to read as follows:

EXTRA Flugzeugbau GMBH: Docket No. 99–CE–85–AD.

(a) *What airplanes are affected by this AD?* This AD applies to the following airplane models and serial numbers that are certificated in any category:

Model	Serial Nos.
EA–300	1 through 62
EA–300L	1 through 5
EA–300S	1 through 29

(b) *Who must comply with this AD?* Anyone who wishes to operate any of the above airplanes must comply with this AD.

(c) *What problem does this AD address?* The actions specified by this AD are intended to detect and correct cracks in the horizontal stabilizer attachment, which could result in structural failure of the aft fuselage with consequent loss of control of the airplane.

(d) *What actions must I accomplish to address this problem?* To address this problem, you must accomplish the following:

Actions	Compliance	Procedures
(1) For all affected airplanes, inspect, using a fluorescent dye penetrant method, the upper longeron at the horizontal stabilizer attachment for cracks in the areas depicted in Figure 1 of this AD.	Upon accumulating 250 hours time-in-service (TIS) or within the next 50 hours TIS after the effective date of this AD, whichever occurs later.	In accordance with Part I of Extra Service Bulletin No. 300–2–95 (pages 2–6 at Issue: C, dated July 15, 1998; and pages 1 and 7 through 11 at Issue: D, dated January 30, 2001). No further action is required by this paragraph if the modification is already accomplished in accordance with Part II of Extra Service Bulletin No. 300–2–95 (all pages at Issue: C, dated July 15, 1998).
(2) For all affected air planes, if no crack(s) is(are) found during the inspection required by this AD, modify the upper longeron at the horizontal stabilizer attachment.	Prior to further flight after the inspection required by paragraph (d)(1) of this AD.	In accordance with Part II of Extra Service Bulletin No. 300–2–95 (pages 2–6 at Issue: C, dated July 15, 1998; and pages 1 and 7 through 11 at Issue: D, dated January 30, 2001). No further action is required by this paragraph if already accomplished in accordance with Part II of Extra Service Bulletin No. 300–2–95 (all pages at Issue: C, dated July 15, 1998).
(3) For all affected airplanes, if any crack is found during the inspection required by this AD and the crack(s) is(are) in Area A or Area B as depicted in Figure 1 of this AD, accomplish the following: (i) Repair and modify the upper longeron at the horizontal stabilizer attachment; and (ii) Weld the cracks tight during repair.	Prior to further flight after the inspection where any crack is found in Area A or Area B as depicted in Figure 1 of this Ad.	In accordance with Part II of Extra Service Bulletin No. 300–2–95, Issue: D, dated January 30, 2001. No further action is required by this paragraph if already accomplished in accordance with Part II of Extra Service Bulletin No. 300–2–95 (all pages at Issue: C, dated July 15, 1998).
(4) For all affected airplanes, if any crack is found during the inspection and the crack(s) is(are) in Area C as depicted in Figure 1 of this AD, accomplish the following: (i) Obtain a repair scheme from the manufacturer; (ii) Incorporate this repair scheme; and (iii) Accomplish any follow-up actions as directed by the FAA.	Prior to further flight after the inspection where any crack is found.	In accordance with a repair scheme obtained from EXTRA Flugzeugbau GmbH, Flugplatz Dinslaken, D–46569 Hünxe, Federal Republic of Germany; telephone: (0 28 58) 91 37–00; facsimile: (0 28 58) 91 37–30. Obtain this repair scheme through FAA at the address specified in paragraph (f) of this and AD.
(5) For airplanes with less than 200 hours TIS as of the effective date of this AD, limit operation to the Normal category by accomplishing the following: (i) Fabricate two placards using letters of at least 1/10-inch in height consisting of the following words: ''OPERATIONS LIMITED TO NORMAL CATEGORY''; (ii) Install these placards on the airplane instrument panels (one on the front panel and one on the rear panel) next to the airspeed indicators within the pilot's clear view; and (iii) Insert a copy of this AD into the Limitations Section of the Airplane Flight Manual (AFM).	Within the next 50 hours TIS after the effective date of this AD until the inspection and the modification required by this AD are accomplished.	Not applicable.
(6) The Owner/operator holding at least a private pilot certificate as authorized by section 43.7 of the Federal Aviation Regulations (14 CFR 43.7) may fabricate and install the placard as required by paragraphs (d)(5)(i) and (d)(5)(ii) of this AD and insert this AD into the Limitations Section of the AFM as required by paragraph (d)(5)(iii) of this AD.	Within the next 50 hours TIS after the effective date of this AD until the first inspection and the modification required by this AD are accomplished.	Make an entry into the aircraft records showing compliance with this AD in accordance with section 43.9 of the Federal Aviation Regulations (14 CFR and the 43.9).
(7) For all affected Model EA–300S airplanes, modify the fuselage frame underneath the stabilizer attachment.	Within the next 200 hours TIS after the effective date of this AD.	In accordance with Part III of Extra Service Bulletin No. 300–2–95 (pages 2–6 at Issue: C, dated July 15, 1998; and pages 1 and 7 through 11 at Issue: D, dated January 30, 2001).

Actions	Compliance	Procedures
(8) For all affected airplanes with less than 200 hours TIS as of the effective date of this AD, the inspection, modification, and repair, as necessary, (as specified in paragraphs (d)(1) through (d0(4) of this AD) may be accomplished instead of the operational limitations of paragraph (d)(5) of this AD.	Upon accumulating 250 hours TIS or within the next 50 hours TIS after the effective date of this AD, whichever occurs later.	Inspect in accordance with Figure 1 of this AD and Part I of Extra Service Bulletin No. 300–2–95 (pages 2–6 at Issue: C, dated July 15, 1998; and pages 1 and 7 through 11 at Issue: D, dated January 30, 2001). Modify in accordance with Part II of the service bulletin. Repair in accordance with the service bulletin or a repair scheme obtained from the manufacturer, as applicable.

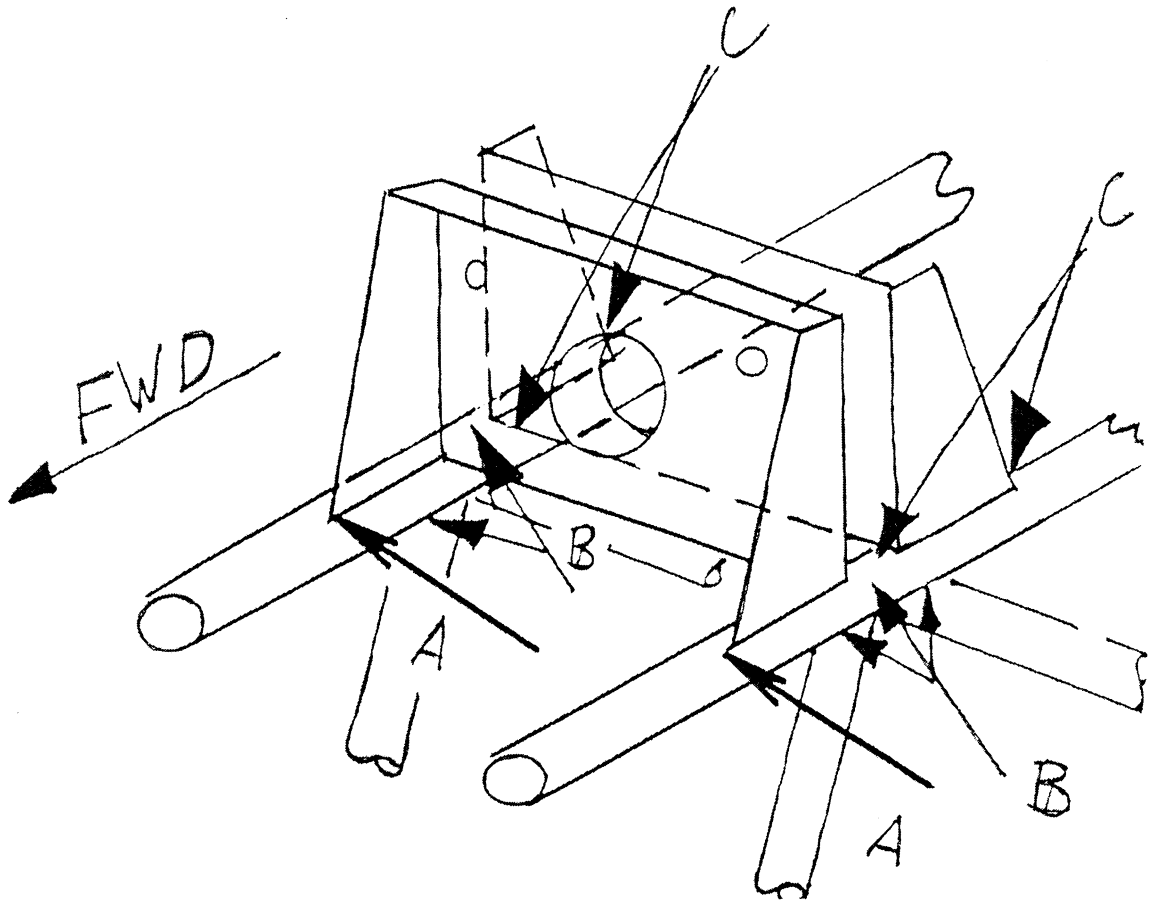

Figure 1

(e) *Can I comply with this AD in any other way?* You may use an alternative method of compliance or adjust the compliance time if:

(1) Your alternative method of compliance provides an equivalent level of safety; and

(2) The Manager, Small Airplane Directorate, approves your alternative. Submit your request through an FAA Principal Maintenance Inspector, who may add comments and then send it to the Manager, Small Airplane Directorate.

Note 1: This AD applies to each airplane identified in paragraph (a) of this AD, regardless of whether it has been modified, altered, or repaired in the area subject to the requirements of this AD. For airplanes that have been modified, altered, or repaired so that the performance of the requirements of this AD is affected, the owner/operator must request approval for an alternative method of compliance in accordance with paragraph (e) of this AD. The request should include an assessment of the effect of the modification, alteration, or repair on the unsafe condition addressed by this AD; and, if you have not eliminated the unsafe condition, specific actions you propose to address it.

(f) *Where can I get information about any already-approved alternative methods of compliance?* Contact Karl Schletzbaum, Aerospace Engineer, FAA, Small Airplane Directorate, 901 Locust, Room 301, Kansas City, Missouri 64106; telephone: (816) 329–4146; facsimile: (816) 329–4090.

(g) *What if I need to fly the airplane to another location to comply with this AD?* The FAA can issue a special flight permit under sections 21.197 and 21.199 of the Federal Aviation Regulations (14 CFR 21.197 and 21.199) to operate your airplane to a location where you can accomplish the requirements of this AD.

(h) *How do I get copies of the documents referenced in this AD?* Direct questions or technical information related to Extra Service Bulletin No. 300–2–95 (pages 2–6 at Issue: C, dated July 15, 1998; and pages 1 and 7 through 11 at Issue: D, dated January 30, 2001) to EXTRA Flugzeugbau GmbH, Flugplatz Dinslaken, D–46569 Hünxe, Federal Republic of Germany; telephone: (0 28 58) 91 37–00; facsimile: (0 28 58) 91 37–30. You may view this service information at FAA, Central Region, Office of the Regional Counsel, 901 Locust, Room 506, Kansas City, Missouri 64106.

Issued in Kansas City, Missouri, on September 18, 2001.

Michael Gallagher,

Manager, Small Airplane Directorate, Aircraft Certification Service.

[FR Doc. 01–24024 Filed 9–25–01; 8:45 am]

BILLING CODE 4910–13–U

DEPARTMENT OF TRANSPORTATION

Federal Highway Administration

23 CFR Part 650

[FHWA Docket No. FHWA–2001–9182]

RIN 2125–AE75

Highway Bridge Replacement and Rehabilitation Program

AGENCY: Federal Highway Administration (FHWA), DOT.

ACTION: Advance notice of proposed rulemaking (ANPRM); request for comments.

SUMMARY: The FHWA is seeking comments regarding improvements that can be made to its regulation outlining the highway bridge replacement and rehabilitation program (HBRRP). In addition, the FHWA is considering the inclusion and/or modification of existing policies so that the States and local governments can better manage their bridge assets. Over the years, the FHWA has established policies in many areas for the proper use of bridge funds. The FHWA may need to eliminate some of these policies and incorporate others into the regulation. The FHWA seeks comments from the public, State and local governments, and other Federal agencies on the best means to improve the program.

DATES: Comments must be received on or before December 26, 2001.

ADDRESSES: Mail or hand deliver comments to the U.S. Department of Transportation, Dockets Management Facility, Room PL–401, 400 Seventh Street, SW., Washington, DC 20590, or submit electronically at http://dmses.dot.gov/submit. All comments should include the docket number that appears in the heading of this document. All comments received will be available for examination and copying at the above address from 9 a.m. to 5 p.m., e.t., Monday through Friday, except Federal holidays. Those desiring notification of receipt of comments must include a self-addressed, stamped postcard or you may print the acknowledgment page that appears after submitting comments electronically.

FOR FURTHER INFORMATION CONTACT: Mr. Raymond McCormick, Office of Bridge Technology, HIBT–30, (202) 366–4675; or Mr. Robert Black, Office of the Chief Counsel, HCC–31, (202) 366–1359, Federal Highway Administration, 400 Seventh Street, SW., Washington, DC 20590–0001. Office hours are from 7:45 a.m. to 4:15 p.m. e.t., Monday through Friday, except Federal holidays.

SUPPLEMENTARY INFORMATION:

Electronic Access and Filing

You may submit or retrieve comments online through the Document Management System (DMS) at: http://dmses.dot.gov/submit. Acceptable formats include: MS Word (versions 95 to 97), MS Word for Mac (versions 6 to 8), Rich Text File (RTF), American Standard Code Information Interchange (ASCII)(TXT), Portable Document Format (PDF), and WordPerfect (versions 7 to 8). The DMS is available 24 hours each day, 365 days each year. Electronic submission and retrieval help and guidelines are available under the help section of the web site.

An electronic copy of this document may also be downloaded by using a computer, modem and suitable communications software from the Government Printing Office's Electronic Bulletin Board Service at (202) 512–1661. Internet users may also reach the Office of the Federal Register's home page at: http://www.nara.gov/fedreg and the Government Printing Office's web page at: http://www.access.gpo.gov/nara.

Background

The Highway Bridge Replacement and Rehabilitation Program (HBRRP) was established in accordance with section 124 of the Surface Transportation Assistance Act of 1978 (Pub. L. 95–599, 92 Stat. 2689, 2702). It was established to assist the States in the replacement and rehabilitation of bridges declared unsafe because of structural deficiencies, physical deterioration, or functional obsolescence. The FHWA published regulations to provide guidance and establish procedures for administering the HBRRP at 44 FR 15665 on March 15, 1979. The regulation for administering the HBRRP is contained in 23 CFR part 650, subpart D. Over the years, the FHWA has incorporated many policy and administrative changes into the HBRRP. In addition, the Intermodal Surface Transportation Efficiency Act of 1991 (ISTEA) (Pub. L. 102–240, 105 Stat. 1914) and the Transportation Equity Act for the 21st Century (TEA–21) (Pub. L. 105–178, 112 Stat. 107 (1998)) provided considerable flexibility to the States with regards to the Federal-aid program. In recognition of these facts, the FHWA is seeking input into the revision of the regulations so that they better meet the needs of the State and local governments while, at the same time, meeting the national goals of improving the condition of the Nation's bridges.

In the National Bridge Inventory (NBI) (see 23 CFR 650.311) there are approximately 587,598 bridges nationwide, of which 170,130 are classified as being either structurally deficient or functionally obsolete. The HBRRP funding is available for replacement or rehabilitation of these deficient structures, with the terms ''replacement'' and ''rehabilitation'' as defined under 23 CFR 650.405(b), and summarized below. There remain an additional 417,468 bridges that would benefit from increased service life with sufficient maintenance and preservation work. The current regulations do not address the use of the HBRRP funds for system preservation activities that would extend the service life of the structures. The status of the Nation's infrastructure is changing. In the past, there was a greater need to construct new bridges on new alignments. In the present, perhaps a more cost-effective approach would be to systematically extend the service life of our structures using data from the bridge management system.

Currently, a bridge is eligible for HBRRP funding if it is undergoing major reconstruction. ''Major reconstruction'' is interpreted to mean rehabilitation or replacement under 23 CFR 650.405(b). To summarize:

1. Rehabilitation

Conduct of major work to restore the structural integrity of a bridge as well as work necessary to correct major safety defects. The bridge needing rehabilitation, both on and off the Federal-aid system, must conform to the provisions of 23 CFR part 625, Design Standards for Federal-aid Highways for the class of highway on which the bridge is a part. The standards that apply for a bridge on the National Highway System (NHS) would be the American Association of State Highway and Transportation Officials (AASHTO) standards, and for a Federal-aid bridge off the NHS, the States' standards.

2. Replacement

Conduct of work to replace a structurally deficient or functionally obsolete bridge with a new facility constructed in the same general traffic corridor. The new structure must meet the current geometric, construction, and structural standards required for the

type and volume of projected traffic on the facility over its design life.

In our effort to facilitate review of the Highway Bridge Replacement and Rehabilitation Program regulations, the FHWA seeks comments on the following questions:

1. A bridge is eligible for HBRRP funding if it is undergoing major reconstruction as defined under § 650.405. Is the current definition for major reconstruction adequate? If not, how should it be modified?

2. Section 309 of National Highway System Designation Act of 1995 (NHS Act) (Pub. L. 104–59, 109 Stat 634, November 28, 1995) added subsection (d) to section 116 of title 23. Subsection (d) now includes preventive maintenance as an activity that shall be eligible for Federal assistance if the State demonstrates that the activity is a cost-effective means of extending the useful life of a Federal-aid highway. In light of the changes made to title 23 by the NHS Act, should the definition of what constitutes rehabilitation be expanded? Work on a bridge that would protect the structural integrity and/or extend its useful service life might be included in the definition of rehabilitation.

3. The FHWA intends to make the HBRRP an effective program, which provides funds for upgrading the Nation's bridges to provide for increasingly safe structures for the traveling public. What flexibility should be provided in this program in order to reach this goal?

4. The standards that govern eligibility for rehabilitation and replacement are the AASHTO or the States' standards depending on the classification of the highway system. Should there be consistency nationwide on the appropriate standard(s) to be followed on all bridges that are insensitive to highway classification? The FHWA requests ideas on how to achieve this and manage it on a national level.

5. The following examples of work are not considered major reconstruction, and are therefore not eligible for HBRRP funds.

- Safety feature replacement or upgrading (bridge rail, approach rail or impact attenuators).
- Overlay of bridge deck if part of a larger highway-surfacing project.
- Utility work.
- Emergency repair to restore structural integrity to the previous status following an accident.
- Retrofitting to correct a deficiency, which does not substantially alter physical geometry or increase the load-carrying capacity.
- Work performed to keep a bridge operational while plans for complete rehabilitation or replacement are under preparation.
- Cost of long approach fills, causeways, connecting roadways, interchanges, ramps and other extensive earth structures, when constructed beyond the attainable touchdown point. (A nominal amount of approach work, sufficient to connect the new facility to the existing roadway or to return the grade line to an attainable touchdown point in accordance with good design practice is eligible).

Should the definition of major reconstruction project include some or all of these types of projects? Should these types of projects be eligible for HBRRP funds?

7. The FHWA uses the sufficiency rating as a basis for establishing eligibility and priority for HBRRP funding. Through this process a list of eligible bridges is established. The States then may choose any bridge project on this list for replacement or rehabilitation. Should this process be changed? If so, what method would be most effective in eliminating deficient bridges?

8. The apportionment factors are based on bridge construction unit costs sent annually by the States to the FHWA. The FHWA uses 3-year averages of these costs as replacement costs. The FHWA is seeking comments on this process and on improving the accuracy of the cost data received.

9. Section 650.411 sets procedures for bridge replacement and rehabilitation projects for submission and approval. Should any of this be modified? If so, how? *Related Rulemakings and Notices:* The FHWA is also in the process of reviewing 23 CFR part 650, subpart C, National Bridge Inspection Standards. The FHWA will soon publish an advanced notice of proposed rulemaking for this program. Additionally, the FHWA will soon publish a notice of proposed rulemaking for 23 CFR part 650, subpart G, Discretionary Bridge Candidate Rating Factor.

Rulemaking Analyses and Notices

All comments received before the close of business on the comment closing date indicated above will be considered and will be available for examination in the docket at the above address. Comments received after the comment closing date will be filed in the docket and will be considered to the extent practicable. In addition to late comments, the FHWA will also continue to file relevant information in the docket as it becomes available after the comment period closing date, and interested persons should continue to examine the docket for new material. An NPRM may be issued at any time after close of the comment period.

Executive Order 12866 (Regulatory Planning and Review) and DOT Regulatory Policies and Procedures

The FHWA has determined preliminarily that the contemplated rule would not be a significant regulatory action within the meaning of Executive Order 12866 and would not be significant within the meaning of U. S. Department of Transportation regulatory policies and procedures. It is anticipated that the economic impact of this action would be minimal. Changes to the HBRRP would increase the number of bridges eligible under the program. However, if the total amount of funding for the program remains the same, the impact on the economy would be minimal. Further, if the FHWA extends eligibility to include maintenance and preservation in the long run this would have a positive impact by increasing the service life of existing bridges, and therefore would offset any initial increase in the number of eligible bridges. Any proposed changes should not likely interfere with any action taken or planned by another agency.

Based upon the information received in response to this ANPRM, the FHWA intends to carefully consider the costs and benefits associated with this rulemaking. Accordingly, comments, information, and data are solicited on the economic impact of any proposed recommendation for changes to the HBRRP.

Regulatory Flexibility Act

In compliance with the Regulatory Flexibility Act (Pub. L. 96–354, 5 U.S.C. 60 l-612), and based upon the information received in response to this ANPRM, the FHWA will evaluate the effects of any action proposed on small entities. The FHWA anticipates that any action proposed would not have a significant economic impact on a substantial number of small entities. The FHWA encourages commenters to evaluate any options addressed here with regard to the potential for impact, and to formulate their comments accordingly.

Unfunded Mandates Reform Act of 1995

The actions being considered under this ANPRM would not impose unfunded mandates as defined by the Unfunded Mandates Reform Act of 1995 (Public. Law. 104–4, March 22, 1995,

109 Stat. 48). The actions being considered under this ANPRM would not result in the expenditure by State, local, and tribal governments, in the aggregate, or by the private sector, of $100 million or more in any one year (2 U.S.C. 1532). Further, in compliance with the Unfunded Mandates Reform Act of 1995, the FHWA will evaluate any regulatory action that might be proposed in subsequent stages of the proceeding to assess the affects on State, local, and tribal governments and the private sector.

Executive Order 13132 (Federalism)

Any action that might be proposed in subsequent stages of this proceeding will be analyzed in accordance with the principles and criteria contained in Executive Order 13132, and the FHWA anticipates that any action contemplated will not have sufficient federalism implications to warrant the preparation of a federalism assessment. The FHWA also anticipates that any action taken will not preempt any State law or State regulation or affect the States' ability to discharge traditional State governmental functions. We encourage commenters to consider these issues, however, as well as matters concerning any costs or burdens that might be imposed on the States as a result of actions considered here.

Executive Order 13175 (Tribal Consultation)

Any action that might be proposed in subsequent stages of this proceeding will be analyzed under Executive Order 13175, dated November 6, 2000. The FHWA believes that any proposal will not have substantial direct effects on one or more Indian tribes; will not impose substantial direct compliance costs on Indian tribal governments; and will not preempt tribal law. Therefore, the FHWA anticipates that a tribal summary impact statement will not be required.

Executive Order 12372 (Intergovernmental Review)

Catalog of Federal Domestic Assistance Program Number 20.205, Highway Planning and Construction. The regulations implementing Executive Order 12372 regarding intergovernmental consultation on Federal programs and activities apply to this program.

Executive Order 12988 (Civil Justice Reform)

This action meets applicable standards in section 3(a) and 3(b)(2) of Executive Order 12988, Civil Justice Reform, to minimize litigation, eliminate ambiguity, and reduce burden.

Executive Order 13045 (Protection of Children)

We have analyzed this action under Executive Order 13045, Protection of Children from Environmental Health Risks and Safety Risks. This rule is not an economically significant rule and does not concern an environmental risk to health or safety that may disproportionately affect children.

Executive Order 12630 (Taking of Private Property)

This rule will not effect taking of private property or otherwise have taking implications under Executive Order 12630, Governmental Actions and Interference with Constitutionally Protected Property Rights.

Paperwork Reduction Act

Under the Paperwork Reduction Act of 1995 (PRA) (44 U.S.C. 3501, *et seq.*), Federal agencies must obtain approval from the Office of Management and Budget (OMB) for each collection of information they conduct, sponsor, or require through regulations. The FHWA has determined that this ANPRM does not contain a collection of information requirement for purposes of the PRA.

National Environmental Policy Act

The agency also will analyze any action that might be proposed for the purpose of the National Environmental Policy Act of 1969 (42 U.S.C. 4321–4347) to assess whether there would be any effect on the quality of the environment.

Regulation Identification Number

A regulation identification number (RIN) is assigned to each regulatory action listed in the Unified Agenda of Federal Regulations. The Regulatory Information Service Center publishes the Unified Agenda in April and October of each year. The RIN contained in the heading of this document can be used to cross-reference this action with the Unified Agenda.

List of Subjects in 23 CFR Part 650

Bridges, Grant programs—transportation, Highways and roads.

Authority: 23 U.S.C. 144 and 315; 49 CFR 1.48.

Issued on: September 19, 2001.

Vincent F. Schimmoller,

Deputy Executive Director.

[FR Doc. 01–24091 Filed 9–25–01; 8:45 am]

BILLING CODE 4910–22–P

DEPARTMENT OF TRANSPORTATION

Federal Highway Administration

23 CFR Part 650

[FHWA Docket No. FHWA–2001–8954]

RIN 2125–AE86

National Bridge Inspection Standards

AGENCY: Federal Highway Administration (FHWA), DOT.

ACTION: Advance notice of proposed rulemaking (ANPRM); request for comments.

SUMMARY: The FHWA is soliciting comments on whether to revise its regulation on National Bridge Inspection Standards (NBIS) to incorporate current, state-of-the-art bridge inspection practices that public authorities may be using. It has been 14 years since the NBIS regulations were updated. The experience, material, and technology changes over time dictate that the FHWA take a fresh look at these regulations. The FHWA has received some unsolicited comments from engineers, inspectors, transportation planners, and others recommending a number of changes to the FHWA's NBIS regulations. In revising these regulations the FHWA is considering incorporating a number of the FHWA policy memorandums and technical advisories into the regulation. In this ANPRM, the FHWA is soliciting comments on whether to amend its NBIS regulations to incorporate changes in technology and enforcement mechanisms. Additionally, the FHWA intends to update the rule to comply with current state-of-the-art bridge inspection techniques.

DATES: Comments must be received on or before December 26, 2001.

ADDRESSES: Mail or hand deliver comments to the U.S. Department of Transportation, Dockets Management Facility, Room PL–401, 400 Seventh Street, SW., Washington, DC 20590, or submit electronically at *http://dmses.dot.gov/submit.* All comments should include the docket number that appears in the heading of this document. All comments received will be available for examination and copying at the above address from 9 a.m. to 5 p.m., e.t., Monday through Friday, except Federal holidays. Those desiring notification of receipt of comments must include a self-addressed, stamped postcard or you may print the acknowledgment page that appears after submitting comments electronically.

FOR FURTHER INFORMATION CONTACT: Mr. Wade F. Casey, P.E., Federal Lands Highway, HFPD–9, (202) 366–9486, or Mr. Robert Black, Office of the Chief Counsel, HHC–30, (202) 366–1359, Federal Highway Administration, 400 Seventh Street, SW., Washington, DC 20590–0001. Office hours are from 7:45 a.m. to 4:15 p.m., e.t., Monday through Friday, except Federal holidays.

SUPPLEMENTARY INFORMATION:

Electronic Access and Filing

You may submit or retrieve comments online through the Document Management System (DMS) at: http://dmses.dot.gov/submit. Acceptable formats include: MS Word (versions 95 to 97), MS Word for Mac (versions 6 to 8), Rich Text File (RTF), American Standard Code Information Interchange (ASCII)(TXT), Portable Document Format (PDF), and WordPerfect (versions 7 to 8). The DMS is available 24 hours each day, 365 days each year. Electronic submission and retrieval help and guidelines are available under the help section of the web site.

An electronic copy of this document may also be downloaded by using a computer, modem and suitable communications software from the Government Printing Office's Electronic Bulletin Board Service at (202) 512–1661. Internet users may also reach the Office of the Federal Register's home page at: *http://www.nara.gov/fedreg* and the Government Printing Office's web page at: *http://www.access.gpo.gov/nara.*

Background

The FHWA bridge inspection program regulations were developed as a result of the Federal-Aid Highway Act of 1968 (sec. 26, Pub. L. 90–495, 82 Stat. 815, at 829) that required the Secretary of Transportation to establish national bridge inspection standards (NBIS). The NBIS was authorized after the 1967 collapse of the Silver Bridge, at Point Pleasant, West Virginia, that resulted in the death of 46 people. The primary purpose of the NBIS is to locate, evaluate, and act on existing bridge deficiencies to ensure the safety of the traveling public (23 U.S.C. 151).

The 1968 Federal-Aid Highway Act directed the States to maintain an inventory of Federal-aid highway system bridges. The Federal-Aid Highway Act of 1970 (sec. 204, Pub. L. 91–605, 84 Stat. 1713, at 1741) limited the NBIS to bridges on the Federal-aid highway system. In the Surface Transportation Assistance Act of 1978 (STAA) (sec. 124, Pub. L. 95–599, 92 Stat. 2689, at 2702), NBIS requirements were extended to bridges greater than 20 feet on all public roads. The Surface Transportation and Uniform Relocation Assistance Act of 1987 (STURRA) (sec.125, Pub. L. 100–17, 101 Stat. 132, at 166) expanded bridge inspection programs to include special inspection procedures for fracture critical members and underwater inspection.

The condition of our nation's bridges is of paramount importance to the FHWA. In revising the NBIS regulations, the FHWA will ensure the ''proper safety inspection and evaluation of all highway bridges'' for the safety of the traveling public. Highway bridges play an important role in achieving the FHWA's strategic goals of safety, mobility, productivity, human and natural environment as well as national security.

Application of Standards

The current FHWA regulation requires that the American Association of State Highway Transportation Officials (AASHTO) definition of a bridge be used when determining which structures are to be inspected and reported. Should the FHWA develop its own definition of a bridge for the purpose of inspection and reporting? Should the FHWA definition change the way the bridge length is determined or what the minimum bridge length should be for reporting purposes? Current AASHTO policy measures bridges from undercopings of the abutments or spring lines of arches, or between extreme ends of openings for multiple boxes. The span opening then must be greater than 20 feet for reporting. What impact will the possible inclusion of more bridges be (1) on public authorities complying with this as an NBIS requirement, (2) or on the FHWA which maintains the inventory, (3) or on the HBRRP funds? A public authority means a Federal, State, county, town, or township, Indian tribe, municipal or other local government instrumentality with the authority to finance, build, operate, or maintain toll or toll-free facilities.

Inspection Procedures

The current FHWA regulation includes the following:

- The AASHTO ''Manual for Maintenance Inspection of Bridges'' [1] will be used for determining load ratings for each bridge;
- If the States' maximum legal load exceeds the load permitted under the operating rating then the bridge must be posted;
- A listing of bridges with fracture critical members along with information on location, description and inspection frequency must be maintained;
- Underwater members must be identified and special inspection performed no longer than every 5 years; and
- Bridges with other unique features must be identified and special safety inspections performed.

The results of underwater inspection of bridge piers since 1978 reveal that both construction materials used and the environment where the bridge is located impact inspection frequency. Also, the results of underwater inspections of bridge pier piling in concrete lined irrigation channels suggest that little, if any, deterioration occurs in the 5 years between inspections. Bridge engineers have commented that it may be more economical to increase the time between inspections, while not impacting safety. Based on comments from bridge engineers, the FHWA is considering changing the 5 year underwater inspection intervals and developing intervals which are tied to pile or foundation materials as well as the environment where the bridge is located. What impact will changing the underwater inspection intervals have on public authorities complying with this as an NBIS requirement?

Scour, the leading cause of bridge failure in the United States, is not addressed directly in the current NBIS regulations, but is covered in a FHWA technical advisory.[2] The FHWA is considering providing guidance within the regulations to address this. Also, the FHWA is seeking comment on whether it should provide guidance for what public authorities should do after major storm events. These storm events can, in some cases, severely undermine bridge piers that may have lost bearing capacity because of localized scour. The FHWA is considering inclusion of the FHWA Technical Advisory T 5140.23 within the NBIS regulations. What, if any, would be the impact on public authorities complying with evaluation of scour at bridges criteria within the NBIS regulation?

[1] The AASHTO Manual referred to in this part as the Manual for Maintenance Inspection of Bridges 1983 has been updated and is now entitled Manual for Condition Evaluation of Bridges, 1994 Second Edition and is available through AASHTO, 444 North Capitol Street, N.W. Suite 249, Washington, DC 20001.

[2] FHWA Technical Advisory T 5140.23, October 28, 1991, ''Evaluating Scour at Bridges,'' is available at web site: *http://www.fhwa.dot.gov/legsregs/directives.* Also, it is available from the docket file for this document at: *http://dms.dot.gov.* Internal directives are available for inspection and copying as provided in 49 CFR part 7.

Frequency of Inspections

The current FHWA regulation requires that bridges be inspected every 2 years. The maximum interval can be increased to 4 years with FHWA approval after meeting certain conditions. Should the 4-year interval be increased so that more bridges would be eligible for the extended inspection cycle? What would be a reasonable interval? What impact would this have on the safety of bridges?

Qualification of Personnel

The current FHWA regulation requires that the individual in charge of the inspection and reporting be a registered professional engineer (PE); or be qualified for registration as a PE; or have a minimum of 10 years experience in bridge inspection in a responsible capacity and have completed certain training requirements. The individual in charge of the inspection team shall either meet the above qualifications or have a minimum of 5 years experience in bridge inspection assignments in a responsible capacity and have completed certain training requirements. Should the individual in charge of the inspection and reporting who is a PE be required to have the same training as bridge inspectors and have additional experience in bridge inspection?

In the current regulations, the registered professional engineer is not required to have specific bridge inspection training. Also, the discipline of the registered professional engineer is not specified. The FHWA is considering requiring that bridge inspections be performed by either a civil or structural engineer who is also a licensed professional engineer. Currently, the regulation permits professional engineers within other engineering disciplines to inspect highway bridges. Experience shows that only those engineers specifically trained to provide bridge inspection services are best equipped to conduct bridge inspections. Should the NBIS regulation be more specific as to the discipline of the professional engineer responsible for these bridge inspections and what impact would this change have on public authorities complying with this?

Bridge engineers have indicated that inspection programs need to include an engineer in training (EIT) component. Bridge engineers feel that a graduate EIT engineer should qualify as a field team leader with appropriate bridge inspector's training and a minimum of 2 years bridge design, inspection or construction experience.

According to the NBIS, a bridge inspector must have a minimum of 10 years experience in bridge inspection assignments in a responsible capacity. Bridge engineers would like clarification of the phrase ''in a responsible capacity.''

Section 151 of title 23, U.S. Code, indicates that a training program for bridge inspectors shall be revised from time to time to take into account new and improved techniques. Bridge engineers have indicated that qualifications for inspectors should be modified to provide more training or experience in proportion to the complexity of the structure being inspected. The FHWA is considering requiring certification training in proportion to the complexity of the bridge structure being inspected, and making this a part of a requirement for inspectors under the national bridge inspection program. What impact would this change have on public authorities complying with this as an NBIS requirement?

Bridge engineers have indicated that the NBIS does not adequately address qualification requirements for those performing underwater inspections. Should those performing underwater inspections be qualified licensed professional engineers? Current regulations do not stipulate that the inspector in the water must also be an engineer. What impact would these proposed changes have on public authorities complying with this?

Inspection Report

The current FHWA regulation states that AASHTO's ''Manual for Maintenance Inspection of Bridges'' be used (see footnote 1). This manual describes the guidelines for organizing the reports, written report requirements, and documentation of defects using photos and sketches.

Bridge inspectors have indicated that those in management have made changes to their reports without having been in the field to view, first hand, the conditions of a particular bridge. The FHWA does not support this practice and believes any change to an inspection report should be made by the inspector who was out in the field. This procedure should be clearly covered in the NBIS. What if any would the impact be on public authorities complying with only allowing the inspector who was out in the field to change the inspection report as an NBIS requirement?

Inventory

The current FHWA regulation requires each State to maintain an inventory of all bridges in its State and submit the inventory to the FHWA annually. The data to be collected is outlined in the ''Recording and Coding Guide for the Structure Inventory and Appraisal of the Nation's Bridges.'' [3] Requirements for entering new or updated data into the State's inventory or placing load restriction signs is set to 90 days for bridges under the States jurisdiction and 180 days for all other bridges.

The FHWA believes that the procedures for bridge inventory are adequately written and require no modification. Should the reporting requirements for the NBIS be changed and what, if any, would the impact be on public authorities complying with this?

Additional General Questions

In our effort to facilitate review of this NBIS regulation, the FHWA seeks comments on the following additional questions:

1. Does the current regulation at 23 CFR part 650, subpart C, correctly address the requirements of 23 U.S.C. 151, national bridge inspection program?
2. What improvements would you recommend to the bridge inspection procedures?
3. What specific procedures would you recommend to enhance the NBIS regulations?

Related Rulemakings and Notices

The FHWA is also in the process of reviewing 23 CFR part 650, subpart D, Highway Bridge Replacement and Rehabilitation Program (HBRRP). The FHWA will soon publish an advanced notice of proposed rulemaking for the HBRRP. Additionally, the FHWA will soon publish a notice of proposed rulemaking, for 23 CFR part 650, subpart G, Discretionary Bridge Candidate Rating Factor.

Rulemaking Analyses and Notices

All comments received before the close of business on the comment closing date indicated above will be considered and will be available for examination in the docket at the above address. Comments received after the comment closing date will be filed in the docket and will be considered to the extent practicable. In addition to late comments, the FHWA will also continue to file relevant information in the docket as it becomes available after

[3] ''Recording and Coding Guide for the Structure Inventory and Appraisal of the Nation's Bridges,'' December 1995, FHWA, Report No. FHWA–PD–96–001, is available at URL: *http://www.fhwa.dot.gov/////bridge/mtguide.pdf* and may be inspected and copied as prescribed at 49 CFR part 7.

the comment period closing date, and interested persons should continue to examine the docket for new material. A notice of proposed rulemaking may be issued at any time after close of the comment period.

Executive Order 12866 (Regulatory Planning and Review) and DOT Regulatory Policies and Procedure

The FHWA has preliminarily determined that this action would be a significant regulatory action within the meaning of Executive Order 12866 and within the meaning of the U.S. Department of Transportation regulatory policies and procedures because the proposed action concerns a matter on which there is substantial public interest. The Office of Management and Budget (OMB) designated this proposed regulation as a significant regulatory action and has reviewed it under E.O. 12866. Because of the preliminary nature of this document and lack of necessary information on costs as well as benefits, the FHWA is unable to evaluate the impact of potential changes to the NBIS.

Based upon the information received in response to this notice, the FHWA intends to carefully consider the costs and benefits associated with this rulemaking. Accordingly, comments, information, and data are solicited on the economic impact of any proposed recommendation for change to the NBIS.

Regulatory Flexibility Act

In compliance with the Regulatory Flexibility Act (Pub. L. 96–354, 5 U.S.C. 601–612), and based upon the information received in response to this ANPRM, the FHWA will evaluate the effects on small entities of any action proposed. This action merely seeks information regarding potential changes to the NBIS. Therefore, the FHWA is unable to certify at this time whether or not any proposed changes to the NBIS will have a significant economic impact on a substantial number of small entities.

Unfunded Mandates Reform Act of 1995

Because of the preliminary nature of this document and lack of necessary information on costs, the FHWA is unable to evaluate the effects of the potential regulatory changes in regards to imposing a Federal mandate involving expenditure by State, local and Indian tribal governments, in the aggregate, or by the private sector, of $100 million or more in any one year (2 U.S.C. 1532). Nevertheless, the FHWA will evaluate any regulatory action that might be proposed in subsequent stages of this rulemaking to assess the affects on State, local, and Indian tribal governments and the private sector.

Executive Order 12988 (Civil Justice Reform)

The FHWA will evaluate any action that may be proposed in response to comments received to ensure that such action meets applicable standards in section 3(a) and 3(b)(2) of Executive Order 12988, Civil Justice Reform, to minimize litigation, eliminate ambiguity, and reduce burden.

Executive Order 13045 (Protection of Children)

The FHWA will evaluate any rule that may be proposed in response to comments received under Executive Order 13045, Protection of Children from Environmental Health Risks and Safety Risks. We do not, however, anticipate that any such rule would be economically significant or would present an environmental risk to health or safety that may disproportionately affect children.

Executive Order 12630 (Taking of Private Property)

The FHWA will evaluate any rule that may be proposed in response to comments received to ensure that any such rule will not effect a taking of private property or otherwise have taking implications under Executive Order 12630, Governmental Actions and Interference with Constitutionally Protected Property Rights.

Executive Order 13132 (Federalism)

Any action that might be proposed in subsequent stages of this proceeding will be analyzed in accordance with the principles and criteria contained in Executive Order 13132, and the FHWA anticipates that any action contemplated will not have sufficient federalism implications to warrant the preparation of a federalism assessment. The FHWA will consult extensively with public authorities regarding any changes to the NBIS regulations. The FHWA also anticipates that any action taken will not preempt any State law or State regulation or affect the States' ability to discharge traditional State governmental functions. We encourage commenters to consider these issues.

Executive Order 13175 (Tribal Consultation)

The FHWA will analyze any proposal under Executive Order 13175, dated November 6, 2000. The FHWA preliminarily believes that any proposal will not have substantial direct effects on one or more Indian tribes; will not impose substantial direct compliance costs on Indian tribal governments; and will not preempt tribal law. Therefore, a tribal summary impact statement may not be required.

Executive Order 12372 (Intergovernmental Review)

Catalog of Federal Domestic Assistance Program Number 20.205, Highway Planning and Construction. The regulations implementing Executive Order 12372 regarding intergovernmental consultation on Federal programs and activities apply to this program.

Paperwork Reduction Act of 1995

Under the Paperwork Reduction Act of 1995 (PRA) (44 U.S.C. 3501, *et. seq.*), Federal agencies must obtain approval from the Office of Management and Budget (OMB) for each collection of information they conduct, sponsor, or require through regulations. The currently-approved information collection entitled Structure Inventory and Appraisal (SI&A) sheet is covered by OMB Approval Number 2125–0501. The current expiration date is April 30, 2004. The SI&A sheets are used by the States to provide the FHWA required information on bridge inspections. The FHWA estimates that a total of 540,000 burden hours are utilized by all of the States to fulfill their current reporting obligations. Any action that might be contemplated in subsequent phases of this proceeding will be analyzed for the purpose of the PRA for its impact to this current information collection. The FHWA would be required to submit any proposed collections of information to OMB for review and approval at the time the NPRM is issued and, accordingly, seeks public comments. Interested parties are invited to send comments regarding any aspect of these information collection requirements, including, but not limited to: (1) Whether the collection of information would be necessary for the performance of the functions of the FHWA, including whether the information would have practical utility; (2) the accuracy of the estimated burden; (3) ways to enhance the quality, utility, and clarity of the collection of information; and (4) ways to minimize the collection burden without reducing the quality of the information collected.

National Environmental Policy Act

The agency will analyze any action that might be proposed for the purpose of the National Environmental Policy Act of 1969 (42 U.S.C. 4321–4347) to assess whether there would be any effect on the quality of the environment.

Regulation Identification Number

A regulation identification number (RIN) is assigned to each regulatory action listed in the Unified Agenda of Federal Regulations. The Regulatory Information Service Center publishes the Unified Agenda in April and October of each year. The RIN contained in the heading of this document can be used to cross reference this action with the Unified Agenda.

List of Subjects in 23 CFR Part 650

Bridges, Grant programs—transportation, Highways and roads, Reporting and recordkeeping requirements.

Authority: 23 U.S.C. 151 and 315; 49 CFR 1.48.

Issued on: September 19, 2001.

Vincent F. Schimmoller,

Deputy Executive Director.

[FR Doc. 01–24092 Filed 9–25–01; 8:45 am]

BILLING CODE 4910–22–P

DEPARTMENT OF THE INTERIOR

Fish and Wildlife Service

50 CFR Part 17

RIN 1018–AH40

Endangered and Threatened Wildlife and Plants; Notice of a Public Hearing and Extension of Comment Period for Proposed Endangered Status for the Sacramento Mountains Checkerspot Butterfly and Proposed Designation of Critical Habitat

AGENCY: Fish and Wildlife Service, Interior.

ACTION: Proposed rule; notice of public hearing and extension of comment period.

SUMMARY: We, the U.S. Fish and Wildlife Service (Service), give notice that we are holding a public hearing for the proposed rule to list the Sacramento Mountains checkerspot butterfly (*Euphydryas anicia cloudcrofti*) as endangered with critical habitat under the authority of the Endangered Species Act (Act) of 1973, as amended (16 U.S.C. 1531 *et seq.*). We also give notice of the extension of the comment period for the proposed rule for the Sacramento Mountains checkerspot butterfly. The extension of the comment period will be for 30 additional days (until December 5, 2001). We invite all interested parties to submit comments on this proposal. The extension of the comment period will allow all interested parties to submit written comments on the proposal. Comments already submitted on the proposed rule need not be resubmitted as they will be fully considered in the final determination.

DATES: We will hold a public hearing at the Alamogordo Civic Center, 800 East First Street, Alamogordo, New Mexico, from 6 to 8 p.m. on Thursday, October 18, 2001, to solicit comments on the proposed rule to list the Sacramento Mountains checkerspot butterfly as endangered with critical habitat. The comment period for this proposal now closes on December 5, 2001. Comments must be received by the closing date. We will consider all comments received at the public hearing or those submitted in writing by December 5, 2001, the closing date of the comment period on this proposal.

ADDRESSES: You may submit written comments and materials concerning the proposal at the hearing or send them directly to Joy Nicholopoulos, Field Supervisor, U.S. Fish and Wildlife Service, New Mexico Ecological Services Field Office, 2105 Osuna NE, Albuquerque, New Mexico, 87113. Written comments may also be sent by facsimile to (505) 346–2542 or through the Internet to *R2FWE_AL@fws.gov*. All comments, including names and addresses, will become part of the administrative record and may be released. You may also hand-deliver written comments to our New Mexico Ecological Services Field Office, at the above address. Comments and materials received, as well as supporting documentation used in the preparation of this proposed rule, will be available for public inspection, by appointment, during normal business hours from 8:00 a.m. to 4:30 p.m., at the above address. You may obtain copies of the proposed rule from the above address, by calling 505/346–2525, ext. 135, or from our website at *http://ifw2es.fws.gov/Library/*.

FOR FURTHER INFORMATION CONTACT: Eric Hein, Endangered Species Biologist, New Mexico Ecological Services Field Office, at the above address (telephone 505/346–2525, ext. 135; facsimile 505/346–2542) or visit our website at *http://ifw2es.fws.gov/*.

SUPPLEMENTARY INFORMATION:

Background

On December 27, 1999, we published a substantial 90-day finding indicating that listing the Sacramento Mountains checkerspot butterfly may be warranted and initiated a status review for the required 12-month finding (64 FR 72300). On September 6, 2001, we published a proposed rule to list the butterfly as endangered with critical habitat under the Endangered Species Act of 1973, as amended (Act) (66 FR 46575). The proposed rule constitutes our 12-month administrative finding. The 60-day public comment period on the proposed rule is extended and now closes on December 5, 2001. In the proposed rule, we determined that much of the remaining suitable habitat, and the long term persistence of the subspecies, is threatened by the direct and indirect effects, or some combination thereof, of commercial and private development, Forest Service projects (*e.g.,* campground reconstruction, powerline construction, road maintenance), fire suppression activities, highway reconstruction, off-highway vehicle use, trampling, and overgrazed range conditions (66 FR 46575). The butterfly is also threatened by encroachment of conifers and non-native vegetation into non-forested openings, over collection, and, due to its limited range, vulnerability to local extirpations from extreme weather events or catastrophic wildfire. We concluded that the extent of known localities and the non-forested suitable habitat, and the quality of the remaining suitable habitat are threatened. We expect the significant amount of habitat conversion from commercial and private development, which has occurred over the last several decades, will increase and continue to further degrade or eliminate the quality and quantity of Sacramento Mountains checkerspot butterfly habitat, placing the animal in danger of extinction throughout all or a significant portion of its range. The butterfly is vulnerable because of its limited range, over collection, and habitat degradation.

If the proposed rule is finalized, section 7(a)(2) of the Act would require that Federal agencies ensure that actions they fund, authorize, or carry out are not likely to result in the ''destruction or adverse modification'' of critical habitat. Section 4 of the Act requires us to consider economic and other relevant impacts that could arise from specifying any particular area as critical habitat. We request data and comments from the public and all interested parties on all aspects of the proposal, including data on economic and other impacts of the proposed designation.

We stated in the proposed rule that should a public hearing be requested, then we would announce the date, time, and place for the hearing in the **Federal Register** and local newspapers at least 15 days prior to the hearing. This notice provides information regarding that hearing and extends the comment period an additional 30 days.

Public hearings are designed to gather relevant information that the public may

have that we should consider in our rule-making. During the hearing, we will present information about the proposed action. We invite the public to submit information and comments either at the hearings or in writing. This notice and public hearing will allow all interested parties to submit comments on the proposed rule and proposed designation. We are seeking comments or suggestions from the public, other concerned governmental agencies, tribes, the scientific community, industry, or any other interested parties concerning the proposal.

We may have to limit the time allotted for oral statements, if the number of people who wish to comment necessitates such a limitation. We encourage persons wishing to comment at the hearings to provide a written copy of their statement at the start of the hearing. There is no limit on the length of written comments. Persons may send written comments to our office (see **ADDRESSES** section) at any time during the open comment period, which is extended and now closes on December 5, 2001. We will give equal consideration to oral and written comments. We are publishing legal notices announcing the date, time, and location of the hearing in newspapers, concurrently with this **Federal Register** notice.

National Environmental Policy Act

It is our position that, outside the Tenth Circuit, we do not need to prepare environmental analyses as defined by the National Environmental Policy Act (NEPA) in connection with designating critical habitat under the Endangered Species Act of 1973, as amended. We published a notice outlining our reasons for this determination in the **Federal Register** on October 25, 1983 (48 FR 49244). This assertion was upheld in the courts of the Ninth Circuit (*Douglas County* v. *Babbitt*, 48 F.3d 1495 (9th Cir. Ore. 1995), cert. denied 116 S. Ct. 698 (1996). However, when the range of the species includes States within the Tenth Circuit, such as that of the Sacramento Mountains checkerspot butterfly, pursuant to the Tenth Circuit ruling in *Catron County Board of Commissioners* v. *U.S. Fish and Wildlife Service*, 75 F.3d 1429 (10th Cir. 1996), we will undertake a NEPA analysis for the critical habitat designation. We will notify the public of the availability of the draft NEPA document for this proposal so that interested and affected parties may participate and contribute to a final decision. The draft NEPA document will be sent out for a minimum 45-day public comment period, during which comments will be solicited.

In addition, we will conduct a robust economic analysis on the effects of the proposed critical habitat designation prior to a final determination. We will conduct an analysis that complies with the ruling by the Tenth Circuit Court of Appeals in *New Mexico Cattle Growers Association, et. al.* v. *U.S. Fish and Wildlife Service*. When the draft economic analysis is completed, we will announce its availability with a notice in the **Federal Register**, and we will reopen the comment period at that time to accept comments on the draft economic analysis, draft NEPA document, or further comment on the proposed rule. We will also transmit the draft documents to all who commented on the proposed rule, and send the documents to anyone who requests a copy. We are particularly interested in comments or suggestions on reasons why any particular area should or should not be designated as critical habitat, information on the distribution and quality of habitat for the Sacramento Mountains checkerspot butterfly, land use practices and current or planned activities in areas that may be affected by a designation of critical habitat, and any other pertinent issues of concern.

Author: The primary author of this notice is Eric Hein (see **ADDRESSES** section).

Authority: The authority for this action is the Endangered Species Act of 1973 (16 U.S.C. 1531 *et seq.*).

Dated: September 17, 2001.

Nancy M. Kaufman,

Regional Director, Region 2.

[FR Doc. 01–24037 Filed 9–25–01; 8:45 am]

BILLING CODE 4310–55–P

Notices

Federal Register

Vol. 66, No. 187

Wednesday, September 26, 2001

This section of the FEDERAL REGISTER contains documents other than rules or proposed rules that are applicable to the public. Notices of hearings and investigations, committee meetings, agency decisions and rulings, delegations of authority, filing of petitions and applications and agency statements of organization and functions are examples of documents appearing in this section.

DEPARTMENT OF AGRICULTURE

Animal and Plant Health Inspection Service

[Docket No. 01–066–1]

Notice of Request for Extension of a Currently Approved Information Collection

AGENCY: Animal and Plant Health Inspection Service, USDA.

ACTION: Extension of approval of an information collection; comment request.

SUMMARY: In accordance with the Paperwork Reduction Act of 1995, this notice announces the Animal and Plant Health Inspection Service's intention to request an extension of approval of a currently approved information collection in support of its imported fire ant regulations.

DATES: We invite you to comment on this docket. We will consider all comments that we receive by November 26, 2001.

ADDRESSES: Please send four copies of your comment (an original and three copies) to: Docket No. 01–066–1, Regulatory Analysis and Development, PPD, APHIS, Suite 3C03, 4700 River Road Unit 118, Riverdale, MD 20737–1238.

Please state that your comment refers to Docket No. 01–066–1.

You may read any comments that we receive on this docket in our reading room. The reading room is located in room 1141 of the USDA South Building, 14th Street and Independence Avenue SW., Washington, DC. Normal reading room hours are 8 a.m. to 4:30 p.m., Monday through Friday, except holidays. To be sure someone is there to help you, please call (202) 690–2817 before coming.

APHIS documents published in the **Federal Register**, and related information, including the names of organizations and individuals who have commented on APHIS dockets, are available on the Internet at http://www.aphis.usda.gov/ppd/rad/webrepor.html.

FOR FURTHER INFORMATION CONTACT: For information on the imported fire ant regulations, contact Mr. Charles L. Brown, Staff Officer, Invasive Species and Pest Management, Plant Health Programs, PPQ, APHIS, 4700 River Road Unit 134, Riverdale, MD 20737–1236, (301) 734–4838. For copies of more detailed information on the information collection, contact Mrs. Celeste Sickles, APHIS' Information Collection Coordinator, at (301) 734–7477.

SUPPLEMENTARY INFORMATION:

Title: Imported Fire Ant.

OMB Number: 0579–0102.

Type of Request: Extension of approval of an information collection.

Abstract: The Animal and Plant Health Inspection Service (APHIS) of the U.S. Department of Agriculture is responsible for preventing the interstate spread of injurious plant pests, such as the imported fire ant, from infested areas of the United States to noninfested areas. Implementing this responsibility requires the use of domestic quarantines to restrict the interstate movement of regulated articles that could carry the plant pest. The Plant Protection Act authorizes the Department to carry out this mission.

Nursery owners who elect to enter our Imported Fire Ant-Free Nursery Program visually inspect their premises for the presence of imported fire ants, record the results in a notebook or log sheet, and record any treatments they perform if fire ants are discovered.

State plant protection officials collect this information by interviewing the nursery owner, reviewing the owner's inspection and treatment records, and inspecting the nursery site. The information obtained is used for issuing the various certificates, permits, and other documents that enable the nursery owner to move regulated items (such as potted nursery plants, sod, or other products) across State lines to markets outside the area under quarantine for imported fire ant.

Without this information collection, we would be unable to collect the information we need to effectively implement our imported fire ant quarantine. Persons who grow, handle, or move regulated nursery articles interstate may also enter into a compliance agreement with APHIS. Compliance agreement candidates must meet all applicable State training and certification standards regarding pesticide application. Any person who enters into a compliance agreement with APHIS must agree to comply with all provisions of the Imported Fire Ant Quarantine and Regulations in 7 CFR 301.81 through 301.81–10.

We are asking the Office of Management and Budget (OMB) to approve our use of this information collection activity for an additional 3 years.

The purpose of this notice is to solicit comments from the public (as well as affected agencies) concerning our information collection. These comments will help us:

(1) Evaluate whether the proposed collection of information is necessary for the proper performance of the Agency functions, including whether the information will have practical utility;

(2) Evaluate the accuracy of our estimate of the burden of the proposed collection of information, including the validity of the methodology and assumptions used;

(3) Enhance the quality, utility, and clarity of the information to be collected; and

(4) Minimize the burden of the collection of information on those who are to respond, through use, as appropriate, of automated, electronic, mechanical, and other collection technologies, e.g., permitting electronic submission of responses.

Estimate of burden: The public reporting burden for this collection of information is estimated to average 0.42371 hours per response.

Respondents: U.S. nursery owners, shippers, and State and county plant health protection authorities.

Estimated annual number of respondents: 4,024.

Estimated annual number of responses per respondent: 2.93836.

Estimated annual number of responses: 11,824.

Estimated total annual burden on respondents: 5,010 hours. (Due to averaging, the total annual burden hours may not equal the product of the annual number of responses multiplied by the reporting burden per response.)

All responses to this notice will be summarized and included in the request

for OMB approval. All comments will also become a matter of public record.

Done in Washington, DC, this 20th day of September 2001.

Bobby R. Acord,

Acting Administrator, Animal and Plant Health Inspection Service.

[FR Doc. 01–24054 Filed 9–25–01; 8:45 am]

BILLING CODE 3410–34–U

DEPARTMENT OF AGRICULTURE

Animal and Plant Health Inspection Service

[Docket No. 01–070–1]

Notice of Request for Extension of a Currently Approved Information Collection

AGENCY: Animal and Plant Health Inspection Service, USDA.

ACTION: Extension of approval of an information collection; comment request.

SUMMARY: In accordance with the Paperwork Reduction Act of 1995, this notice announces the Animal and Plant Health Inspection Service's intention to request an extension of approval of an information collection in support of regulations regarding the issuance of phytosanitary certificates for plants or plant products being shipped to foreign countries.

DATES: We invite you to comment on this docket. We will consider all comments that we receive by November 26, 2001.

ADDRESSES: Please send four copies of your comment (an original and three copies) to: Docket No. 01–070–1, Regulatory Analysis and Development, PPD, APHIS, Suite 3C03, 4700 River Road Unit 118, Riverdale, MD 20737–1238.

Please state that your comment refers to Docket No. 01–070–1.

You may read any comments that we receive on this docket in our reading room. The reading room is located in room 1141 of the USDA South Building, 14th Street and Independence Avenue SW., Washington, DC. Normal reading room hours are 8 a.m. to 4:30 p.m., Monday through Friday, except holidays. To be sure someone is there to help you, please call (202) 690–2817 before coming.

APHIS documents published in the **Federal Register**, and related information, including the names of organizations and individuals who have commented on APHIS dockets, are available on the Internet at http://www.aphis.usda.gov/ppd/rad/webrepor.html.

FOR FURTHER INFORMATION CONTACT: For information regarding phytosanitary export certification, contact Mrs. Parul Patel, Senior Export Specialist, PPQ, APHIS, 4700 River Road Unit 140, Riverdale, MD 20737–1236, (301) 734–5491. For copies of more detailed information on the information collection, contact Mrs. Celeste Sickles, APHIS' Information Collection Coordinator, at (301) 734–7477.

SUPPLEMENTARY INFORMATION:

Title: Phytosanitary Export Certification.

OMB Number: 0579–0052.

Type of Request: Extension of approval of an information collection.

Abstract: The Animal and Plant Health Inspection Service (APHIS), among other things, provides export certification services to assure other countries that the plants and plant products they are receiving from the United States are free of plant pests specified by the receiving country.

It should be noted that our regulations do not require that we engage in export certification activities. We perform this work as a service to exporters who are shipping plants or plant products to countries that require phytosanitary certification as a condition of entry.

To request that we perform a phytosanitary inspection, an exporter must complete and submit an Application for Phytosanitary Inspection and Certification (PPQ Form 572).

After assessing the condition of the plants or plant products intended for export (i.e., after conducting a phytosanitary inspection), an inspector (who may be an APHIS employee or a State or county plant regulatory official) will issue an internationally recognized phytosanitary certificate (PPQ Form 557), a phytosanitary certificate for reexport (PPQ Form 579), or an export certificate for processed plant products (PPQ Form 578).

These forms are critical to our ability to certify plants and plant products for export. Without them, we would be unable to conduct an export certification program.

The purpose of this notice is to solicit comments from the public (as well as affected agencies) concerning our information collection. These comments will help us:

(1) Evaluate whether the collection of information is necessary for the proper performance of the functions of the Agency, including whether the information will have practical utility;

(2) Evaluate the accuracy of our estimate of the burden of the collection of information, including the validity of the methodology and assumptions used;

(3) Enhance the quality, utility, and clarity of the information to be collected; and

(4) Minimize the burden of the collection of information on those who are to respond, through use, as appropriate, of automated, electronic, mechanical, and other collection technologies; *e.g.,* permitting electronic submission of responses.

Estimate of burden: The public reporting burden for this collection of information is estimated to average 0.7095995 hours per response.

Respondents: U.S. growers, shippers, and exporters; State and county plant health protection authorities.

Estimated annual number of respondents: 14,375.

Estimated annual number of responses per respondent: 52.869.

Estimated annual number of responses: 759,992.

Estimated total annual burden on respondents: 539,290 hours. (Due to averaging, the total annual burden hours may not equal the product of the annual number of responses multiplied by the reporting burden per response.)

All responses to this notice will be summarized and included in the request for OMB approval. All comments will also become a matter of public record.

Done in Washington, DC, this 20th day of September 2001.

Bobby R. Acord,

Acting Administrator, Animal and Plant Health Inspection Service.

[FR Doc. 01–24055 Filed 9–25–01; 8:45 am]

BILLING CODE 3410–34–U

DEPARTMENT OF COMMERCE

Foreign-Trade Zones Board

[Docket 38–2001]

Foreign-Trade Zone 72, Indianapolis, IN, Application for Subzone, Rolls Royce Corporation (Gas Turbine Engines), Indianapolis, IN

An application has been submitted to the Foreign-Trade Zones Board (the Board) by the Indianapolis Airport Authority, grantee of FTZ 72, requesting special-purpose subzone status for the gas turbine engine manufacturing plant of Rolls Royce Corporation in Indianapolis, Indiana. The application was submitted pursuant to the provisions of the Foreign-Trade Zones Act, as amended (19 U.S.C. 81a–81u), and the regulations of the Board (15 CFR part 400). It was formally filed on September 18, 2001.

The engine manufacturing facilities of Rolls Royce in Indianapolis included in

this application consist of three sites covering 415 acres with four million square feet of plant space: *Site 1* (203 acres; 2.7 million sq. ft.)—''Plant 5,'' 2355 South Tibbs Ave., Indianapolis; *Site 2* (211 acres; 1 million sq. ft.)—''Plant 8,'' 2001 South Tibbs Ave., Indianapolis; *Site 3* (0.7 acres; 32,000 sq. ft.)—''Single Crystal Site,'' 5601 Fortune Circle South, Indianapolis. The facilities (5,000 employees) produce gas turbine engines and engine parts. The engines are used for aircraft, marine and industrial applications. Foreign-sourced materials account for approximately 17 percent of material value, and include parts of turbojets, parts of turbo-propellers, parts of other gas turbines, cast iron parts for turbojets, fuel/lubrication/cooling pumps, bearings, aircraft parts, fasteners, containers, and paints.

Zone procedures would exempt Rolls Royce from Customs duty payments on foreign materials used in production for export. On domestic sales, the company would be able to choose the duty rates that apply to the finished products (duty-free to 2.5 %) rather than the duty rates that would otherwise apply to the foreign-sourced materials noted above (duty-free to 9 %). The application indicates that the savings from zone procedures will help improve the plant's international competitiveness.

In accordance with the Board's regulations, a member of the FTZ Staff has been designated examiner to investigate the application and report to the Board.

Public comment is invited from interested parties. Submissions (original and 3 copies) shall be addressed to the Board's Executive Secretary at one of the following addresses:

1. Submissions Via Express/Package Delivery Services: Foreign-Trade-Zones Board, U.S. Department of Commerce, Franklin Court Building—Suite 4100W, 1099 14th St. NW., Washington, DC 20005; or

2. Submissions Via the U.S. Postal Service: Foreign-Trade-Zones Board, U.S. Department of Commerce, FCB—Suite 4100W, 1401 Constitution Ave. NW., Washington, DC 20230.

The closing period for their receipt is November 26, 2001. Rebuttal comments in response to material submitted during the foregoing period may be submitted during the subsequent 15-day period (to December 11, 2001).

A copy of the application and accompanying exhibits will be available for public inspection at the Office of the Foreign-Trade Zones Board's Executive Secretary at address Number 1 listed above, and at the U.S. Department of Commerce Export Assistance Center, 11405 North Pennsylvania Street, Suite 106, Carmel, IN 46032.

Dated: September 19, 2001.

Dennis Puccinelli,

Executive Secretary.

[FR Doc. 01–24081 Filed 9–25–01; 8:45 am]

BILLING CODE 3510–DS–P

DEPARTMENT OF COMMERCE

Foreign-Trade Zones Board

[Docket 39–2001]

Foreign-Trade Zone 7—Mayaguez, Puerto Rico, Request for Manufacturing Authority, IPR Pharmaceuticals, Inc. (Pharmaceuticals)

An application has been submitted to the Foreign-Trade Zones Board (the Board) by the Puerto Rico Industrial Development Corporation (PRIDCO), grantee of FTZ 7, on behalf of IPR Pharmaceuticals (IPR), requesting authority to manufacture pharmaceutical products under FTZ procedures within FTZ 7—Site L–164–0–63, in Canovanas, Puerto Rico. The application was formally filed on September 18, 2001.

The application requests authority on behalf of IPR to manufacture pharmaceutical products and their intermediates under zone procedures within FTZ 7—Site L–164–0–63. The IPR facility (up to 800 employees) is located at Carr 188, San Isidro Industrial Park, Canovanas, Puerto Rico (5 bldgs., 209,944 sq. ft., on 25.4 acres).

The facility is currently used for the manufacture of pharmaceutical products and their intermediates. The application requests a scope of authority for manufacturing activity conducted under FTZ procedures at the zone site to include general categories of inputs that have recently been approved by the Board for other pharmaceutical plants. They include chemically pure sugars, empty capsules for pharmaceutical use, protein concentrates, natural magnesium phosphates and carbonates, gypsum, anhydrite and plasters, petroleum jelly, paraffin and waxes, sulfuric acid, other inorganic acids or compounds of nonmetals, ammonia, zinc oxide, titanium oxides, fluorides, chlorates, sulfates, salts of oxometallic acids, radioactive chemical elements, compounds of rare earth metals, acyclic hydrocarbons, derivatives of phenols or peroxides, acetals and hemiacetals, phosphoric esters and their salts, diazo-compounds, glands for therapeutic uses, wadding, gauze and bandages, pharmaceutical glaze, hair preparations, lubricating preparations, albumins, prepared glues and adhesives, catalytic preparations, diagnostic or laboratory reagents, prepared binders, acrylic polymers, self-adhesive plates and sheets, other articles of vulcanized rubber, plastic cases, cartons, boxes, printed books, brochures and similar printed matter, carboys, bottles, and flasks, stoppers, caps, and lids, aluminum foil, tin plates and sheets, taps, cocks and valves, and medical instruments and appliances. Materials sourced from abroad represent some 50%–65% of finished product value.

Zone procedures would exempt IPR from Customs duty payments on foreign materials used in production for export. Some 30–40 percent of the plant's shipments are exported. On domestic shipments, the company would be able to defer Customs duty payments on foreign materials, and to choose the duty rate that applies to finished products (duty free-14.2%) instead of the rates otherwise applicable to the foreign input materials (duty free-20%) (noted above). IPR would also exempt duty payments on foreign merchandise that becomes scrap or waste resulting from the production process. FTZ procedures will also help IPR implement a more efficient and cost-effective system for handling Customs requirements because of direct delivery. The application indicates that the savings from zone procedures would help improve IPR's international competitiveness.

In accordance with the Board's regulations, a member of the FTZ staff has been designated examiner to investigate the application and report to the Board.

Public comment is invited from interested parties. Submissions (original and 3 copies) shall be addressed to the Board's Executive Secretary at one of the following addresses:

1. Submissions Via Express/Package Delivery Services: Foreign-Trade-Zones Board, U.S. Department of Commerce, Franklin Court Building—Suite 4100W, 1099 14th St. NW., Washington, DC 20005; or

2. Submissions Via the U.S. Postal Service: Foreign-Trade-Zones Board, U.S. Department of Commerce, FCB—Suite 4100W, 1401 Constitution Ave. NW., Washington, DC 20230.

The closing period for their receipt is November 13, 2001. Rebuttal comments in response to material submitted during the foregoing period may be submitted during the subsequent 5-day period (to November 19, 2001).

A copy of the application and accompanying exhibits will be available for public inspection at the Office of the

Foreign-Trade Zones Board's Executive Secretary at address Number 1 listed above, and at the U.S. Department of Commerce Export Assistance Center, 525 F.D. Roosevelt Ave., Suite 905, San Juan, PR 00918.

Dated: September 19, 2001.

Dennis Puccinelli,

Executive Secretary.

[FR Doc. 01–24080 Filed 9–25–01; 8:45 am]

BILLING CODE 3510–DS–P

DEPARTMENT OF COMMERCE

Foreign-Trade Zones Board

[Docket 40–2001]

Foreign-Trade Zone 199, Texas City, TX: Expansion of Manufacturing Authority; Subzone 199C, Valero Refining Company—Texas, Texas City, TX

An application has been submitted to the Foreign-Trade Zones Board (the Board) by the Texas City Foreign-Trade Zone Corporation, grantee of FTZ 199, requesting authority on behalf of the Valero Refining Company—Texas (Valero), to expand the scope of manufacturing activity conducted under zone procedures within Subzone 199C at the Valero oil refinery complex in Texas City, Texas. The application was submitted pursuant to the provisions of the Foreign-Trade Zones Act, as amended (19 U.S.C. 81a–81u), and the regulations of the Board (15 CFR part 400). It was formally filed on September 19, 2001.

Subzone 199C (310 acres, 415 employees) was approved by the Board in 1996 and is located at 1301 Loop 197 South, Texas City, Texas. Authority was granted for the manufacture of fuel products and certain petrochemical feedstocks and refinery by-products (Board Order 863, 62 FR 1316, 1/9/97).

The refinery (160,000 barrels per day) is used to produce fuels and petrochemical feedstocks. The expansion request involves several modified and upgraded crude distillation units. Valero has been expanding and modifying three crude units to allow for the processing of high sulfur crude within the existing Site 1. The new facilities will increase the overall capacity of the refinery to 223,000 BPD. The feedstocks used and product slate will remain unchanged. The crude oil will be sourced from abroad.

Zone procedures would exempt the new refinery facilities from Customs duty payments on the foreign products used in its exports. On domestic sales, the company would be able to choose the Customs duty rates for certain petrochemical feedstocks (duty-free) by admitting foreign crude oil in non-privileged foreign status. The application indicates that the additional savings from zone procedures would help improve the refinery's international competitiveness.

In accordance with the Board's regulations, a member of the FTZ staff has been appointed examiner to investigate the application and report to the Board.

Public comment is invited from interested parties. Submissions (original and 3 copies) shall be addressed to the Board's Executive Secretary at one of the following addresses:

1. Submissions Via Express/Package Delivery Services: Foreign-Trade-Zones Board, U.S. Department of Commerce, Franklin Court Building—Suite 4100W, 1099 14th St. NW., Washington, DC 20005; or

2. Submissions Via the U.S. Postal Service: Foreign-Trade-Zones Board, U.S. Department of Commerce, FCB—Suite 4100W, 1401 Constitution Ave. NW., Washington, DC 20230.

The closing period for their receipt is November 26, 2001. Rebuttal comments in response to material submitted during the foregoing period may be submitted during the subsequent 15-day period to December 11, 2001.

A copy of the application and accompanying exhibits will be available for public inspection at the Office of the Foreign-Trade Zones Board's Executive Secretary at the first address listed above, and at the U.S. Department of Commerce Export Assistance Center, 500 Dallas, Suite 1160, Houston, TX 77002.

Dated: September 19, 2001.

Dennis Puccinelli,

Executive Secretary.

[FR Doc. 01–24086 Filed 9–25–01; 8:45 am]

BILLING CODE 3510–DS–P

DEPARTMENT OF COMMERCE

International Trade Administration

[Case Number: A–570–803]

Heavy Forged Hand Tools From the People's Republic of China: Extension of Time Limit for Preliminary Results of Antidumping Duty Administrative Review

AGENCY: Import Administration, International Trade Administration, Department of Commerce

EFFECTIVE DATE: September 26, 2001.

FOR FURTHER INFORMATION CONTACT: Jeff Pedersen at (202) 482–4195 and Esther Chen at (202) 482–0989, AD/CVD Enforcement, Office 4, Group II, Import Administration, International Trade Administration, U.S. Department of Commerce, 14th Street and Constitution Ave, NW., Washington, DC 20230.

TIME LIMITS:

Statutory Time Limits

Section 751(a)(3)(A) of the Tariff Act of 1930, as amended (the Act), requires the Department to make a preliminary determination within 245 days after the last day of the anniversary month of an order/finding for which a review is requested and a final determination within 120 days after the date on which the preliminary determination is published. However, if it is not practicable to complete the review within these time periods, section 751(a)(3)(A) of the Act allows the Department to extend the time limit for the preliminary determination to a maximum of 365 days and for the final determination to 180 days (or 300 days if the Department does not extend the time limit for the preliminary determination) from the date of publication of the preliminary determination.

Background

On March 16, 2001, the Department published a notice of initiation of administrative review of the antidumping duty order on heavy forged hand tools from the People's Republic of China, covering the period February 1, 2000 through January 31, 2001 (66 FR 16037). The preliminary results are currently due no later than October 31, 2001.

Extension of Time Limit for Preliminary Results of Review

We determine that it is not practicable to complete the preliminary results of this review within the original time limit. Therefore the Department is extending the time limit for completion of the preliminary results until no later than February 28, 2002. *See* Decision Memorandum from Holly Kuga to Bernard T. Carreau, dated concurrently with this notice, which is on file in the Central Records Unit, Room B–099 of the main Commerce building. We intend to issue the final results no later than 120 days after the publication of the preliminary results notice.

This extension is in accordance with section 751(a)(3)(A) of the Act.

Dated: September 20, 2001.

Holly A. Kuga,

Acting Deputy Assistant Secretary, Import Administration, Group II.

[FR Doc. 01–24084 Filed 9–24–01; 8:45 am]

BILLING CODE 3510–DS–P

DEPARTMENT OF COMMERCE

International Trade Administration

[A–427–801, A–559–801]

Spherical Plain Bearings and Parts Thereof From France and Ball Bearings and Parts Thereof From Singapore: Rescission of Antidumping Duty Administrative Reviews

AGENCY: Import Administration, International Trade Administration, Department of Commerce.

ACTION: Notice of rescission of antidumping duty administrative reviews.

SUMMARY: On June 19, 2001, the Department of Commerce initiated administrative reviews of the antidumping duty order on ball bearings and parts thereof from Singapore for one manufacturer/exporter of the subject merchandise, NMB Singapore Ltd., Pelmec Industries (Pte.) Ltd., and NMB Technologies Corporation, and the antidumping duty order on spherical plain bearings and parts thereof from France, produced and exported by SKF France S.A., for the period May 1, 2000, through April 30, 2001. The Department is rescinding these reviews after receiving timely withdrawals from the parties requesting these reviews.

EFFECTIVE DATE: September 26, 2001.

FOR FURTHER INFORMATION CONTACT: Dunyako Ahmadu or Richard Rimlinger, AD/CVD Enforcement, Office 3, Import Administration International Trade Administration, U.S Department of Commerce, 14th Street and Constitution Avenue, NW., Washington, DC 20230; telephone (202) 482–0198 or (202) 482–4477, respectively.

The Applicable Statute

Unless otherwise indicated, all citations to the Tariff Act of 1930, as amended (''the Act''), are references to the provisions in effect as of January 1, 1995, the effective date of the Uruguay Round Agreements Act. In addition, unless otherwise indicated, all citations to the Department of Commerce's (the Department's) regulations are to the regulations at 19 CFR part 351 (2001).

Background

On May 31, 1001, NMB Singapore Ltd., Pelmec Industries (Pte) Ltd., and NMB Technologies Corporation (collectively ''NMB/Pelmec'') requested that the Department conduct an administrative review of its shipments of ball bearings for the period May 1, 2000, through April 30, 2001, and SKF USA Inc., SKF France, and Sarma (collectively ''SKF'') also requested that the Department conduct an administrative review of its shipments of spherical plain bearings during the period May 1, 2000, through April 30, 2001. On June 19, 2001, the Department published in the **Federal Register** a notice of initiation of these administrative reviews with respect to NMB/Pelmec and SKF, both for the period of May 1, 2000, through April 30, 2001. See *Initiation of Antidumping and Countervailing Duty Administrative Reviews and Requests for Revocations in Part,* 66 FR 32934–32936 (June 19, 2001).

On August 28, 2001, NMB/Pelmec withdrew its request for a review. Similarly, on September 7, 2001, SKF withdrew its request for a review. Furthermore, both NMB/Pelmec and SKF asked the Department to rescind the administrative reviews.

Rescission of Reviews

Pursuant to 19 CFR 351.213(d)(1), the Department will rescind an administrative review if a party that requested the review withdraws the request within 90 days of the date of publication of the notice of initiation of the requested review. Because NMB/Pelmec and SKF submitted their requests for rescission within the 90-day time limit and there were no requests for review from other interested parties, we are rescinding these reviews. As such, we will issue appropriate appraisement instructions directly to the Customs Service. This notice is an accordance with section 777(i) of the Act and 19 CFR 351.213(d)(4).

Dated: September 19, 2001.

Richard W. Moreland,

Deputy Assistant Secretary, Import Administration.

[FR Doc. 01–24082 Filed 9–25–01; 8:45 am]

BILLING CODE 3510–DS–M

DEPARTMENT OF COMMERCE

International Trade Administration

[A–580–601]

Top-of-the-Stove Stainless Steel Cooking Ware From Korea: Extension of Preliminary Results of Antidumping Duty Administrative Review

AGENCY: Import Administration, International Trade Administration, Department of Commerce.

EFFECTIVE DATE: September 26, 2001.

FOR FURTHER INFORMATION CONTACT: Paige Rivas at (202) 482–0651, AD/CVD Enforcement, Office 4, Group II, Import Administration, International Trade Administration, U.S. Department of Commerce, 14th Street and Constitution Ave, NW., Washington, DC 20230.

TIME LIMITS:

Statutory Time Limits

Section 751(a)(3)(A) of the Tariff Act of 1930, as amended (the Act), requires the Department of Commerce (the Department) to make a preliminary determination within 245 days after the last day of the anniversary month of an order/finding for which a review is requested and a final determination within 120 days after the date on which the preliminary determination is published. However, if it is not practicable to complete the review within the time period, section 751(a)(3)(A) of the Act allows the Department to extend the time limit for the preliminary determination to a maximum of 365 days and for the final determination to 180 days (or 300 days if the Department does not extend the time limit for the preliminary determination) from the date of publication of the preliminary determination.

Background

On February 28, 2001 the Department published a notice of initiation of administrative review of the antidumping duty order on Top-of-the-Stove Stainless Steel Cooking Ware from Korea, covering the period January 1, 2000 through December 31, 2000 (65 FR 12758). The preliminary results are currently due no later than October 3, 2000.

Extension of Preliminary Results of Review

We determine that it is not practicable to complete the preliminary results of this review within the original time limit. Therefore, we are extending the time limit for completion of the preliminary results until no later than

January 30, 2002. *See* Decision Memorandum from Senior Office Director Holly Kuga to Deputy Assistant Secretary Bernard T. Carreau, dated concurrently with this notice, which is on file in the Central Records Unit, Room B–099 of the main Commerce Building. We intend to issue the final determination no later than 120 days after the publication of the preliminary results of review notice.

This extension is in accordance with section 751(a)(3)(A) of the Act.

Dated: September 20, 2001.

Holly A. Kuga,

Acting Deputy Assistant Secretary for Import Administration.

[FR Doc. 01–24083 Filed 9–25–01; 8:45 am]

BILLING CODE 3510–DS–P

DEPARTMENT OF COMMERCE

International Trade Administration

The Research Foundation of State University of New York: Notice of Decision on Application for Duty-Free Entry of Scientific Instrument

This decision is made pursuant to Section 6(c) of the Educational, Scientific, and Cultural Materials Importation Act of 1966 (Pub. L. 89–651, 80 Stat. 897; 15 CFR part 301). Related records can be viewed between 8:30 A.M. and 5 P.M. in Suite 4100W, U.S. Department of Commerce, Franklin Court Building, 1099 14th Street, NW., Washington, D.C.

Docket Number: 01–015. Applicant: The Research Foundation of State University of New York, Albany, NY 12201–0009. Instrument: XY Shifting Table and Accessories. Manufacturer: Luigs & Neumann, Germany. Intended Use: See notice at 66 FR 39490, July 31, 2001.

Comments: None received. Decision: Approved. No instrument of equivalent scientific value to the foreign instrument, for such purposes as it is intended to be used, is being manufactured in the United States. Reasons: The foreign instrument provides: (1) Direct approach of the micropipette to the cell, (2) adjustable advancement speed (from 0.04 to 6 mm/sec.), (3) a temperature controlled bath and (4) a stage customized for use with an Olympus microscope. A university research laboratory advised August 21, 2001 that (1) these capabilities are pertinent to the applicant's intended purpose and (2) it knows of no domestic instrument or apparatus of equivalent scientific value to the foreign instrument for the applicant's intended use.

We know of no other instrument or apparatus of equivalent scientific value to the foreign instrument which is being manufactured in the United States.

Gerald A. Zerdy,

Program Manager, Statutory Import Programs Staff.

[FR Doc. 01–24085 Filed 9–25–01; 8:45 am]

BILLING CODE 3510–DS–P

DEPARTMENT OF COMMERCE

National Oceanic and Atmospheric Administration

[I.D. 071101A]

Small Takes of Marine Mammals Incidental to Specified Activities; Seismic Retrofit of the Richmond-San Rafael Bridge, San Francisco Bay, CA

AGENCY: National Marine Fisheries Service (NMFS), National Oceanic and Atmospheric Administration (NOAA), Commerce.

ACTION: Notice of issuance of an incidental harassment authorization.

SUMMARY: In accordance with provisions of the Marine Mammal Protection Act (MMPA) as amended, notification is hereby given that an Incidental Harassment Authorization (IHA) has been issued to the California Department of Transportation (CALTRANS) to take small numbers of Pacific harbor seals and possibly California sea lions, by harassment, incidental to seismic retrofit construction of the Richmond-San Rafael Bridge (the Bridge), San Francisco Bay, (the Bay) CA.

DATES: This authorization is effective from September 19, 2001, through September 18, 2002.

ADDRESSES: A copy of the application may be obtained by writing to Donna Wieting, Chief, Marine Mammal Conservation Division, Office of Protected Resources, National Marine Fisheries Service, 1315 East-West Highway, Silver Spring, MD 20910-3225, or by telephoning one of the contacts listed here.

FOR FURTHER INFORMATION CONTACT: Kenneth R. Hollingshead, Office of Protected Resources, NMFS, (301) 713-2055, ext 128, or Christina Fahy, Southwest Regional Office, NMFS, (562) 980-4023.

SUPPLEMENTARY INFORMATION:

Background

Sections 101(a)(5)(A) and (D) of the MMPA (16 U.S.C. 1361 et seq.) direct the Secretary of Commerce to allow, upon request, the incidental, but not intentional, taking of marine mammals by U.S. citizens who engage in a specified activity (other than commercial fishing) within a specified geographical region if certain findings are made and either regulations are issued or, if the taking is limited to harassment, a notice of a proposed authorization is provided to the public for review and comment.

Permission may be granted if NMFS finds that the taking will have a negligible impact on the species or stock(s) and will not have an unmitigable adverse impact on the availability of the species or stock(s) for subsistence uses and that the permissible methods of taking and requirements pertaining to the monitoring and reporting of such takings are set forth. NMFS has defined ''negligible impact'' in 50 CFR 216.103 as ''an impact resulting from the specified activity that cannot be reasonably expected to, and is not reasonably likely to, adversely affect the species or stock through effects on annual rates of recruitment or survival.''

Section 101(a)(5)(D) of the MMPA established an expedited process by which citizens of the United States can apply for an authorization to incidentally take small numbers of marine mammals by harassment. The MMPA defines ''harassment'' as:

> any act of pursuit, torment, or annoyance which (i) has the potential to injure a marine mammal or marine mammal stock in the wild; or (ii) has the potential to disturb a marine mammal or marine mammal stock in the wild by causing disruption of behavioral patterns, including, but not limited to, migration, breathing, nursing, breeding, feeding, or sheltering.

Section 101(a)(5)(D) establishes a 45-day time limit for NMFS review of an application followed by a 30-day public notice and comment period on any proposed authorizations for the incidental harassment of small numbers of marine mammals. Within 45 days of the close of the comment period, NMFS must either issue or deny issuance of the authorization.

Summary of Request

On June 8, 2001, NMFS received a letter from CALTRANS, requesting reauthorization of an IHA that was first issued to it on December 16, 1997 (62 FR 6704, December 23, 1997), and renewed on January 8, 2000 (65 FR 2375, January 14, 2000), with an effective date for the IHA beginning on September 1, 2000, and expired on August 31, 2001. The renewed authorization would be for the harassment of small numbers of Pacific harbor seals (*Phoca vitulina*) and possibly California sea lions (*Zalophus*

californianus), incidental to seismic retrofit construction of the Bridge.

The Bridge is being seismically retrofitted to withstand a future severe earthquake. Construction is scheduled to extend until the year 2005. A detailed description of the work planned is contained in the Final Natural Environmental Study/Biological Assessment for the Richmond-San Rafael Bridge Seismic Retrofit Project (CALTRANS, 1996). Among other things, seismic retrofit work will include excavation around pier bases, hydro-jet cleaning, installation of steel casings around the piers with a crane, installation of micro-piles, and installation of precast concrete jackets. Foundation construction will require approximately 2 months per pier, with construction occurring on more than one pier at a time. In addition to pier retrofit, superstructure construction and tower retrofit work will also be carried out. Because seismic retrofit construction between piers 52 and 57 has the potential to disturb harbor seals hauled out on Castro Rocks, an IHA is warranted. The duration for the seismic retrofit of foundation and towers on piers 52 through 57, which has not taken place as of this date, will take approximately 7 to 8 months to complete.

Comments and Responses

A notice of receipt of the application and proposed authorization was published on July 23, 2001 (66 FR 38258), and a 30-day public comment period was provided on the application and proposed authorization. Comments were received only from the Marine Mammal Commission (MMC). The MMC concurs with NMFS' preliminary determination that the short-term impact of conducting the proposed seismic retrofit construction activities will result, at most, in a temporary modification in behavior by harbor seals, and, potentially, California sea lions. The MMC also concurs that the monitoring and mitigation measures proposed by CALTRANS appear to be adequate to ensure that the planned activities will not result in the mortality or serious injury of any marine mammal. As a result, the MMC recommends that the requested IHA be issued, provided NMFS is satisfied that the monitoring and mitigation programs will be carried out as described in the application.

Description of Habitat and Marine Mammals Affected by the Activity

A description of the affected San Francisco Bay ecosystem and its associated marine mammals can be found in the proposed authorization document (July 23, 2001, 66 FR 38258), and in the references provided therein. Additional information can be found in the earlier notice of IHA issuance (62 FR 67045, December 23, 1997). Please refer to these documents for further information.

Potential Effects on Marine Mammals

The impact to the harbor seals and California sea lions is expected to be disturbance by the presence of workers, construction noise, and construction vessel traffic. Disturbance from these activities is expected to have a short-term negligible impact to a small number of harbor seals and sea lions. These disturbances will be reduced to the lowest level practicable by implementation of the proposed work restrictions and mitigation measures (see Mitigation).

During the work period, the incidental harassment of harbor seals and, on rare occasions, California sea lions is expected to occur on a daily basis upon initiation of the retrofit work. If harbor seals no longer perceive construction noise and activity as being threatening, they are likely to resume their regular haulout behavior. The number of seals disturbed will vary daily depending upon tidal elevations. It is expected that disturbance to harbor seals during peak periods of abundance will not occur since construction activities will not take place within the restricted work area during the peak period (see Mitigation).

Whether California sea lions will react to construction noise and move away from the rocks during construction activities is unknown. Sea lions are generally thought to be more tolerant of human activities than harbor seals and are, therefore, less likely to be affected.

Potential Effects on Habitat

Short-term impacts of the activities are expected to result in a temporary reduction in utilization of the Castro Rocks haul-out site while work is in progress or until seals acclimate to the disturbance. This will not likely result in any permanent reduction in the number of seals at Castro Rocks. The abandonment of Castro Rocks as a harbor seal haul-out and rookery is not anticipated since existing traffic noise from the Bridge, commercial activities at the Chevron Long Wharf used for off-loading crude oil, and considerable recreational boating and commercial shipping that currently occur within the area have not caused long-term abandonment. In addition, mitigation measures and proposed work restrictions are designed to preclude abandonment. Therefore, as described in detail in CALTRANS (1996), other than the potential short-term abandonment by harbor seals of part or all of Castro Rocks during retrofit construction, no impact on the habitat or food sources of marine mammals are likely from this construction project.

Mitigation

Several mitigation measures to reduce the potential for general noise will be implemented by CALTRANS as part of their activity. General restrictions include: no piles will be driven (i.e., no repetitive pounding of piles) on the Bridge between 9 p.m. and 7 a.m. with the exception of the Concrete Trestle Section; a noise limit of 86 dBA at 50 ft (15 m) between 9 p.m. and 7 a.m. for construction; and a limitation on construction noise levels for 24 hrs/day in the vicinity of Castro Rocks during the pupping/molting restriction period (February 15 through July 31).

To minimize potential harassment of marine mammals, NMFS is requiring CALTRANS to comply with the following mitigation measures: (1) Restriction on work in the water south of the Bridge center line and retrofit work on the Bridge substructure, towers, superstructure, piers, and pilings from piers 52 through 57 from February 15 through July 31 ; (2) no watercraft will be deployed by CALTRANS employees or contractors, during the year within the exclusion zone located between piers 52 and 57, except for when construction equipment is required for seismic retrofitting of piers 52 through 57; and (3) minimize vessel traffic to the greatest extent practicable in the exclusion zone when conducting construction activities between piers 52 and 57. The boundary of the exclusion zone is rectangular in shape (1700 ft (518 m) by 800 ft (244 m)) and completely encloses Castro Rocks and piers 52 through 57, inclusive. The northern boundary of the exclusion zone will be located 300 ft (91 m) from the most northern tip of Castro Rocks, and the southern boundary will be located 300 ft (91 m) from the most southern tip of Castro Rocks. The eastern boundary will be located 300 ft (91 m) from the most eastern tip of Castro Rocks, and the western boundary will be located 300 ft (91 m) from the most western tip of Castro Rocks. This exclusion zone will be restricted as a controlled access area and will be marked off with buoys and warning signs for the entire year.

Monitoring

NMFS will require CALTRANS to monitor the impact of seismic retrofit

construction activities on harbor seals at Castro Rocks. Monitoring will be conducted by one or more NMFS-approved monitors. CALTRANS is to monitor at least one additional harbor seal haul-out within San Francisco Bay to evaluate whether harbor seals use alternative haulout areas as a result of seismic retrofit disturbance at Castro Rocks.

The monitoring protocol will be divided into the Work Period Phase (August 1 through February 14) and the Closure Period Phase (February 15 through July 31). During the Work Period Phase and Closure Period Phase, the monitor(s) will conduct observations of seal behavior at least 3 days/week for approximately one tidal cycle each day at Castro Rocks. The following data will be recorded: (1) Number of seals and sea lions on site; (2) date; (3) time; (4) tidal height; (5) number of adults, subadults, and pups; (6) number of individuals with red pelage; (7) number of females and males; (8) number of molting seals; and (9) details of any observed disturbances. Concurrently, the monitor(s) will record general construction activity, location, duration, and noise levels. At least 2 nights/week, the monitor will conduct a harbor seal census after midnight at Castro Rocks. In addition, during the Work Period Phase and prior to any construction between piers 52 and 57, inclusive, the monitor(s) will conduct baseline observations of seal behavior at Castro Rocks and at the alternative site(s) once a day for a period of 5 consecutive days immediately before the initiation of construction in the area to establish pre-construction behavioral patterns. During the Work Period and Closure Period Phases, the monitor(s) will conduct observations of seal behavior, and collect appropriate data, at the alternative Bay harbor seal haul-out at least 3 days/week (Work Period) and 2 days/week (Closure Period), during a low tide.

In addition, NMFS will require that immediately following the completion of the seismic retrofit construction of the Bridge, the monitor(s) will conduct observations of seal behavior at Castro Rocks at least 5 days/week for approximately 1 tidal cycle (high tide to high tide) each day and for 1 week/month during the months of April, July, October, and January. At least 2 nights/week during this same period, the monitor will conduct an additional harbor seal census after midnight.

Reporting

CALTRANS will provide weekly reports to the Southwest Regional Administrator (Regional Administrator), NMFS, including a summary of the previous week's monitoring activities and an estimate of the number of harbor seals that may have been disturbed as a result of seismic retrofit construction activities. These reports will provide dates, time, tidal height, maximum number of harbor seals ashore, number of adults, sub-adults and pups, number of females/males, number of harbor seals with a red pelage, and any observed disturbances. A description of retrofit activities at the time of observation and any sound pressure levels measurements made at the haulout will also be provided. A draft interim report must be submitted to NMFS by April 30, 2002.

Because seismic retrofit activities are expected to continue beyond the date of expiration of this IHA (presumably under a new IHA), a draft final report must be submitted to the Regional Administrator within 90 days after the expiration of this IHA. A final report must be submitted to the Regional Administrator within 30 days after receiving comments from the Regional Administrator on the draft final report. If no comments are received from NMFS, the draft final report will be considered to be the final report.

CALTRANS will provide NMFS with a follow-up report on the post-construction monitoring activities within 18 months of project completion in order to evaluate whether haul-out patterns are similar to the pre-retrofit haul-out patterns at Castro Rocks.

National Environmental Policy Act

NMFS prepared an Environmental Assessment (EA) in 1997 that concluded that the impacts of CALTRANS' seismic retrofit construction of the Bridge will not have a significant impact on the human environment. A copy of that EA, which includes the Finding of No Significant Impact, is available upon request (see **ADDRESSES**).

Conclusions

NMFS has determined that the short-term impact of the seismic retrofit construction of the Bridge, as described in this document, should result, at worst, in the temporary modification in behavior by harbor seals and, possibly, by some California sea lions. While behavioral modifications, including temporarily vacating the haulout, may be made by these species to avoid the resultant visual and acoustic disturbance, this action is expected to have a negligible impact on the animals. In addition, no take by injury and/or death is anticipated, and harassment takes will be at the lowest level practicable due to incorporation of the mitigation measures mentioned previously in this document.

Authorization

For the above reasons, NMFS has issued an IHA for a 1-year period effective September 19, 2001, for the incidental harassment of harbor seals and California sea lions by the seismic retrofit of the Richmond-San Rafael Bridge, San Francisco Bay, CA, provided the above mentioned mitigation, monitoring and reporting requirements are incorporated.

Dated: September 19, 2001.

Wanda Cain,

Acting Deputy Director, Office of Protected Resources, National Marine Fisheries Service.

[FR Doc. 01–24116 Filed 9–25–01; 8:45 am]

BILLING CODE 3510–22–S

DEPARTMENT OF COMMERCE

National Oceanic and Atmospheric Administration

[I.D. 091701E]

Gulf of Mexico Fishery Management Council; Public Meetings

AGENCY: National Marine Fisheries Service (NMFS), National Oceanic and Atmospheric Administration (NOAA), Commerce.

ACTION: Notice of public meeting.

SUMMARY: The Gulf of Mexico Fishery Management Council (Council) will convene a public meeting of the Socioeconomic Panel (SEP).

DATES: A meeting of the SEP will be held beginning at 8:30 a.m. on Wednesday, October 10, 2001, and will conclude at 4 p.m. on Friday, October 12, 2001.

ADDRESSES: The meeting will be held at the Tampa Airport Hilton Hotel, 2225 Lois Avenue, Tampa, FL 33607; telephone: 813–877–6688.

Council address: Gulf of Mexico Fishery Management Council, 3018 U.S. Highway 301 North, Suite 1000, Tampa, FL 33619.

A copy of the agenda can be obtained by calling 813–228–2815.

FOR FURTHER INFORMATION CONTACT: Antonio B. Lamberte, Economist, Gulf of Mexico Fishery Management Council; telephone: 813–228–2815.

SUPPLEMENTARY INFORMATION: The SEP will convene to review available social and economic information on gag, vermilion snapper, and gray triggerfish and to determine the social and economic implications of the levels of acceptable biological catch (ABC) recommended by the Council's Reef

Fish Stock Assessment Panel (RFSAP). The SEP may recommend to the Council total allowable catch (TAC) levels for the 2002 fishing year and certain management measures associated with achieving the TACs. The SEP will also review a charterboat/headboat study and hear presentation on recently completed study on fishing communities.

Composing the SEP membership are economists, sociologists, and anthropologists from various universities and state fishery agencies throughout the Gulf. They advise the Council on the social and economic implications of certain fishery management measures.

Although other non-emergency issues not on the agendas may come before the SEP for discussion, in accordance with the Magnuson-Stevens Fishery Conservation and Management Act, those issues may not be the subject of formal action during these meetings. Actions of the SEP will be restricted to those issues specifically identified in the agendas and any issues arising after publication of this notice that require emergency action under Section 305(c) of the Magnuson-Stevens Act, provided the public has been notified of the Council's intent to take action to address the emergency.

Special Accommodations

The meeting is open to the public and is physically accessible to people with disabilities. Requests for sign language interpretation or other auxiliary aids should be directed to the Council office by October 3, 2001.

Dated: September 21, 2001.

Richard W. Surdi,

Acting Director, Office of Sustainable Fisheries, National Marine Fisheries Service.

[FR Doc. 01–24115 Filed 9–25–01; 8:45 am]

BILLING CODE 3510–22–S

DEPARTMENT OF COMMERCE

National Oceanic and Atmospheric Administration

[I.D. 091901B]

New England Fishery Management Council; Public Meetings

AGENCY: National Marine Fisheries Service (NMFS), National Oceanic and Atmospheric Administration (NOAA), Commerce.

ACTION: Notice of public meeting.

SUMMARY: The New England Fishery Management Council (Council) is scheduling a public meeting of its Social Sciences Advisory Committee in October, 2001. Recommendations from the committee will be brought to the full Council for formal consideration and action, if appropriate.

DATES: The meeting will be held on October 10, 2001, at 10 a.m.

ADDRESSES: The meeting will be held at the New England Fishery Management Council Office, 50 Water Street, Mill #2, Newburyport, MA 01950; telephone: (978) 465–0492.

FOR FURTHER INFORMATION CONTACT: Paul J. Howard, Executive Director, New England Fishery Management Council (978) 465–0492.

SUPPLEMENTARY INFORMATION: The committee will review and identify social and economic issues associated with scallop management alternatives.

Although non-emergency issues not contained in this agenda may come before this group for discussion, those issues may not be the subject of formal action during this meeting. Action will be restricted to those issues specifically listed in this notice and any issues arising after publication of this notice that require emergency action under section 305(c) of the Magnuson-Stevens Act, provided the public has been notified of the Council's intent to take final action to address the emergency.

Special Accommodations

This meeting is physically accessible to people with disabilities. Requests for sign language interpretation or other auxiliary aids should be directed to Paul J. Howard (see **ADDRESSES**) at least 5 days prior to the meeting dates.

Dated: September 21, 2001.

Richard W. Surdi,

Acting Director, Office of Sustainable Fisheries, National Marine Fisheries Service.

[FR Doc. 01–24114 Filed 9–25–01; 8:45 am]

BILLING CODE 3510–22–S

COMMITTEE FOR THE IMPLEMENTATION OF TEXTILE AGREEMENTS

Adjustment of Import Limits for Certain Cotton and Man-Made Fiber Textile Products Produced or Manufactured in the Republic of Turkey

September 20, 2001.

AGENCY: Committee for the Implementation of Textile Agreements (CITA).

ACTION: Issuing a directive to the Commissioner of Customs increasing limits.

EFFECTIVE DATE: September 26, 2001.

FOR FURTHER INFORMATION CONTACT: Roy Unger, International Trade Specialist, Office of Textiles and Apparel, U.S. Department of Commerce, (202) 482–4212. For information on the quota status of this limit, refer to the Quota Status Reports posted on the bulletin boards of each Customs port, call (202) 927–5850, or refer to the U.S. Customs website at http://www.customs.gov. For information on embargoes and quota re-openings, refer to the Office of Textiles and Apparel website at http://otexa.ita.doc.gov.

SUPPLEMENTARY INFORMATION:

Authority: Section 204 of the Agricultural Act of 1956, as amended (7 U.S.C. 1854); Executive Order 11651 of March 3, 1972, as amended.

The current limit for Category 604 is being increased for swing and carryover, reducing the limit for the Fabric Group to account for the swing being applied to Category 604.

A description of the textile and apparel categories in terms of HTS numbers is available in the CORRELATION: Textile and Apparel Categories with the Harmonized Tariff Schedule of the United States (see **Federal Register** notice 65 FR 82328, published on December 28, 2000). Also see 65 FR 66730, published on November 7, 2000.

D. Michael Hutchinson,

Acting Chairman, Committee for the Implementation of Textile Agreements.

Committee for the Implementation of Textile Agreements

September 20, 2001.

Commissioner of Customs,
Department of the Treasury, Washington, DC 20229.

Dear Commissioner: This directive amends, but does not cancel, the directive issued to you on October 27, 2000, by the Chairman, Committee for the Implementation of Textile Agreements. That directive concerns imports of certain cotton, wool and man-made fiber textile products, produced or manufactured in the Republic of Turkey and exported during the twelve-month period which began on January 1, 2001 and extends through December 31, 2001.

Effective on September 26, 2001, you are directed to adjust the current limits for the following categories, as provided for under the Uruguay Round Agreement on Textiles and Clothing:

Category	Adjusted limit [1]
Fabric Group	
219, 313–O [2], 314–O [3], 315–O [4], 317–O [5], 326–O [6], 617, 625/626/627/628/629, as a group.	203,639,329 square meters of which not more than 51,611,668 square meters shall be in Category 219; not more than 63,080,926 square meters shall be in Category 313–O; not more than 36,701,630 square meters shall be in Category 314–O; not more than 49,317,818 square meters shall be in Category 315–O; not more than 51,611,668 square meters shall be in Category 317–O; not more than 5,734,628 square meters shall be in Category 326–O, and not more than 34,407,781 square meters shall be in Category 617.
Limits not in a Group	
604	3,223,232 kilograms.

[1] The limits have not been adjusted to account for any imports exported after December 31, 2000.

[2] Category 313–O: all HTS numbers except 5208.52.3035, 5208.52.4035 and 5209.51.6032.

[3] Category 314–O: all HTS numbers except 5209.51.6015.

[4] Category 315–O: all HTS numbers except 5208.52.4055.

[5] Category 317–O: all HTS numbers except 5208.59.2085.

[6] Category 326–O: all HTS numbers except 5208.59.2015, 5209.59.0015 and 5211.59.0015.

The Committee for the Implementation of Textile Agreements has determined that this action falls within the foreign affairs exception of the rulemaking provisions of 5 U.S.C. 553(a)(1).

Sincerely,

D. Michael Hutchinson,

Acting Chairman, Committee for the Implementation of Textile Agreements.

[FR Doc. 01–24004 Filed 9–25–01; 8:45 am]

BILLING CODE 3510–DR–S

COMMITTEE FOR THE IMPLEMENTATION OF TEXTILE AGREEMENTS

Duty and Quota Free Imports of Apparel Articles Assembled From Regional and Other Fabric for Beneficiary Sub-Saharan African Countries

September 21, 2001.

AGENCY: Committee for the Implementation of Textile Agreements (CITA).

ACTION: Publishing the Second 12-Month Cap on Duty and Quota Free Benefits

EFFECTIVE DATE: October 1, 2001.

FOR FURTHER INFORMATION CONTACT: Philip J. Martello, Director, Trade and Data Division, Office of Textiles and Apparel, U.S. Department of Commerce, (202) 482–3400.

SUPPLEMENTARY INFORMATION:

Authority: Title I, Section 112(b)(3) of the Trade and Development Act of 2000, Presidential Proclamation 7350 of October 4, 2000 (65 FR 59321).

Title I of the Trade and Development Act of 2000 provides for duty and quota-free treatment for certain textile and apparel articles imported from designated beneficiary sub-Saharan African countries. Section 112(b)(3) of that Act provides duty and quota-free treatment for certain apparel articles assembled in beneficiary sub-Saharan African countries from fabric formed in one or more beneficiary countries. More specifically, this treatment is for apparel articles wholly assembled in one or more beneficiary sub-Saharan African countries from fabric wholly formed in one or more beneficiary countries from yarn originating in the U.S. or one or more beneficiary countries (including fabrics not formed from yarns, if such fabrics are classifiable under heading 5602 and 5603 of the Harmonized Tariff Schedule of the United States and are wholly formed and cut in one or more beneficiary country).

Moreover, this preferential treatment is also available for apparel articles wholly assembled in one or more lesser-developed beneficiary sub-Saharan African countries, regardless of the country of origin of the fabric used to make such articles. This preferential treatment for lesser-developed countries applies through September 30, 2004.

This preferential tariff treatment is limited to imports of qualifying apparel articles in an amount not to exceed a specified percent of the aggregate square meter equivalents of all apparel articles imported into the United States in the preceding 12-month period for which data are available. For the purpose of this notice, the 12-month period for which data are available is the 12-month period ended July 31, 2001. In Presidential Proclamation 7350 (published in the Federal Register on October 4, 2000, 65 FR 59321), the President directed CITA to publish the aggregate quantity of imports allowed during each 12-month period in the Federal Register.

For the one-year period, beginning on October 1, 2001, and extending through September 30, 2002, the aggregate quantity of imports eligible for preferential tariff treatment under these provisions is 313,303,986 square meters equivalents. This quantity will be recalculated for each subsequent year, under Section 112(b)(3)(A). Apparel articles entered in excess of this quantity shall be subject to otherwise applicable tariffs.

The quantity is calculated using the aggregate square meter equivalents of all apparel articles imported into the United States, derived from the set of Harmonized Tariff Schedule (HTS) lines listed in the Annex to the World Trade Organization Agreement on Textiles and Clothing (ATC), and the conversion factors for units of measure into square meter equivalents used by the United States in implementing the ATC.

D. Michael Hutchinson,

Acting Chairman, Committee for the Implementation of Textile Agreements.

[FR Doc.01–24070 Filed 9–25–01; 8:45 am]

BILLING CODE 3510–DR–S

DEFENSE NUCLEAR FACILITIES SAFETY BOARD

Senior Executive Service (SES) Performance Review Board

AGENCY: Defense Nuclear Facilities Safety Board.

ACTION: Notice of membership.

SUMMARY: This notice is issued to announce the membership of the Defense Nuclear Facilities Safety Board (DNFSB) Senior Executive Service (SES) Performance Review Board and the DNFSB SES members available for service on SES performance review boards for other small, independent Federal commissions, committees and boards.

FOR FURTHER INFORMATION CONTACT: Laureen Manning, Deputy Director, Human Resources, 625 Indiana Avenue, NW, Suite 700, Washington, D.C. 20004–2901, (202) 694–7000.

SUPPLEMENTARY INFORMATION: 5 U.S.C. 4314(c)(1) through (5) requires each

agency to establish, in accordance with regulations prescribed by the Office of Personnel Management, one or more Performance Review Boards. The board shall review and evaluate the initial appraisal by the supervisor of a senior executive's performance, along with any recommendations to the appointing authority relative to the performance of the senior executive. The board also shall make recommendations as to whether the career executive should be re-certified, conditionally re-certified, or not re-certified. The DNFSB is a small, independent Federal agency; therefore, these newly designated members of the DNFSB SES Performance Review Board are being drawn from the SES ranks of other agencies.

The following persons comprise a standing roster to serve as members of the Defense Nuclear Facilities Safety Board SES Performance Review Board:

Arctic Research Commission, Garrett W. Brass, Executive Director
National Mediation Board, Stephen Crable, Chief of Staff
Japan-United States Friendship Commission, Eric J. Gangloff, Executive Director
U.S. Chemical Safety and Hazard Investigation Board, Christopher W. Warner, General Counsel
Committee for Purchase From People Who Are Blind or Severely Disabled, Leon A. Wilson, Jr., Executive Director

The following DNFSB SES members comprise a standing roster to serve on performance review boards for other small, independent Federal commissions, committees and boards:

Richard A. Azzaro, General Counsel
J. Kent Fortenberry, Technical Director
James J. McConnell, Technical Lead for Nuclear Weapons Programs
Joseph R. Neubeiser, Deputy General Manager
Kenneth M. Pusateri, General Manager
Richard E. Tontodonato, Technical Lead for Materials Processing & Environmental Restoration Programs

EFFECTIVE DATE: September 26, 2001.

Dated: September 20, 2001.

Kenneth M. Pusateri,

Chairman, Executive Resources Board.

[FR Doc. 01–23987 Filed 9–25–01; 8:45 am]

BILLING CODE 3670–01–P

DEPARTMENT OF EDUCATION

Notice of Proposed Information Collection Requests

AGENCY: Department of Education.

SUMMARY: The Leader, Regulatory Information Management Group, Office of the Chief Information Officer, invites comments on the proposed information collection requests as required by the Paperwork Reduction Act of 1995.

DATES: Interested persons are invited to submit comments on or before November 26, 2001.

SUPPLEMENTARY INFORMATION: Section 3506 of the Paperwork Reduction Act of 1995 (44 U.S.C. Chapter 35) requires that the Office of Management and Budget (OMB) provide interested Federal agencies and the public an early opportunity to comment on information collection requests. OMB may amend or waive the requirement for public consultation to the extent that public participation in the approval process would defeat the purpose of the information collection, violate State or Federal law, or substantially interfere with any agency's ability to perform its statutory obligations. The Leader, Regulatory Information Management Group, Office of the Chief Information Officer, publishes that notice containing proposed information collection requests prior to submission of these requests to OMB. Each proposed information collection, grouped by office, contains the following: (1) Type of review requested, e.g. new, revision, extension, existing or reinstatement; (2) Title; (3) Summary of the collection; (4) Description of the need for, and proposed use of, the information; (5) Respondents and frequency of collection; and (6) Reporting and/or Recordkeeping burden. OMB invites public comment.

The Department of Education is especially interested in public comment addressing the following issues: (1) Is this collection necessary to the proper functions of the Department; (2) will this information be processed and used in a timely manner; (3) is the estimate of burden accurate; (4) how might the Department enhance the quality, utility, and clarity of the information to be collected; and (5) how might the Department minimize the burden of this collection on the respondents, including through the use of information technology.

Dated: September 20, 2001.

John Tressler,

Leader, Regulatory Information Management, Office of the Chief Information Officer.

Office of the Undersecretary

Type of Review: New.

Title: National Evaluation of Upward Bound and Upward Bound Math Science.

Frequency: On Occasion.

Affected Public: Individuals or households.

Reporting and Recordkeeping Hour Burden:

Responses: 4,728.

Burden Hours: 1,686.

Abstract: This request is continuation of the fourth follow-up study and conducting the fifth follow-up of the regular Upward Bound study. It is also for the contintuation of the first follow-up and conducting the second follow-up to the Math Science Upward Bound study. These data collections are part of the National Evaluation of Upward Bound that has been on-going since 1992. The studies are following a sample of 4,728 participants and control group students through high school and into young adulthood. The study is looking at academic achievement, college participation rates, and employment patterns.

Requests for copies of the proposed information collection request may be accessed from *http://edicsweb.ed.gov*, or should be addressed to Vivian Reese, Department of Education, 400 Maryland Avenue, SW., Room 4050, Regional Office Building 3, Washington, D.C. 20202–4651. Requests may also be electronically mailed to the internet address OCIO_RIMG@ed.gov or faxed to 202–708–9346. Please specify the complete title of the information collection when making your request.

Comments regarding burden and/or the collection activity requirements should be directed to Jacqueline Montague at (202) 708–5359 or via her internet address Jackie.Montague@ed.gov. Individuals who use a telecommunications device for the deaf (TDD) may call the Federal Information Relay Service (FIRS) at 1–800–877–8339.

[FR Doc. 01–24025 Filed 9–25–01; 8:45 am]

BILLING CODE 4000–01–P

DEPARTMENT OF ENERGY

Federal Energy Regulatory Commission

[Docket No. IC01–721–001, FERC–721]

Public Information Collection Approved by the Office of Management and Budget

September 20, 2001.

AGENCY: Federal Energy Regulatory Commission, DOE.

ACTION: Notice.

SUMMARY: The Federal Energy Regulatory Commission (Commission) has received Office of Management and Budget (OMB) approval for the following public information collection

pursuant to the requirements of Section 3507(j)(1)of the Paperwork Reduction Act of 1995 (Pub. L. No.104–13), and 5 CFR 1320.13 of OMB's regulations. An agency may not conduct or sponsor and a person is not required to respond to a collection of information unless it displays a currently valid control number.

FOR FURTHER INFORMATION CONTACT: Jack Silverman, Office of the General Counsel, (legal), (202)208–2078; Joseph Cholka, Office of Markets Tariffs and Rates, (technical), (202)208–2414; Michael Miller, Office of the Chief Information Officer, (information policy), (202)208–1415; Federal Energy Regulatory Commission, 888 First Street NE., Washington, DC 20426.

OMB Control No.: 1902–0187.

Expiration Date: 01/31/2002.

Title: Reporting of Natural Gas Sales to California.

Respondents: Businesses or other for -profit.

Estimated annual burden: 89 Respondents; 208 hours per response (avg.); 534 responses; 19,847 total hours.

Estimated Annual Reporting and/or Recordkeeping cost: $2,2334,570.

Frequency of Response: Monthly.

Obligation to Respond: Mandatory.

SUPPLEMENTARY INFORMATION: On July 25, 2001, (66 FR 40245–81, August 2, 2001) the Commission issued an Order in Docket No. RM01–09–000 imposing reporting requirements for natural gas sales to and in the California market. The reporting requirements are being implemented as a result of comments in response to an earlier order of May 18, 2001 (66 FR29121–24, May 29, 2001) issued after the filing of several complaints with the Commission on the price increases of natural gas in California. The prices in California rose dramatically and exceeded the increases in other markets. FERC–721 is intended to provide the Commission with the necessary information to determine what action if any, it should take within its jurisdiction, with respect to the price of natural gas sold in the California market. The Commission intends to collect information on the volumes, and prices of sales to the California market including transportation rates, the daily operational capacity of pipelines to, and in the California market, and the actual volumes flowing to, and in California, plus gas sales and transportation requirements of local distribution companies.

The information is to assist the Commission in carrying out its regulatory responsibilities. First, it will help the Commission determine what part of the problem, if any, is within the scope of its jurisdiction. The information proposed to be collected will give the Commission an accurate picture of overall average gas costs being incurred by all purchasers of natural gas moving into the California market. The information to be collected will also enable the Commission to determine the extent to which the cost of interstate transportation, which is subject to the Commission's jurisdiction, affects the price for the gas commodity at the California border.

Accordingly, because the Commission requires the information as soon as possible, the Commission will require submission of the information on a monthly basis, to be submitted 30 days after the end of each month, for the six months commencing August 1, 2001 and ending January 31, 2002. The first report will be due October 1, 2001.

As indicated in both the July 25 order and in its request for emergency processing and OMB approval, the Commission stated that it would undertake a separate action to request OMB approval to extend the reporting period to September 30, 2002, to coincide with the termination of the Commission's June 19, 2001 California electric power mitigation order. In its approval of the Commission's request for emergency processing, OMB stated several conditions that would have to be met before a submission was made to extend the reporting requirements. These conditions have been listed below to inform the public. They are as follows:

Terms of Clearance

The FERC Information Collection Request, titled ''Reporting of Natural Gas Sales to the California Market,'' is approved through 1/31/02. Should FERC decide to resubmit the ICR for renewal, it must address the practical utility and burden issues described below. FERC should include an explicit discussion of the way in which it addresses these issues as part of its supporting statement.

(1) Practical Utility: The order requires detailed transaction information on gas sales to California—that is, a daily reporting of price and quantity for each component of gas sold to the California market. Several commenters have reported that they do not maintain the data in a way that allows them to disaggregate price/quantity information in this way. Based on the comments, we are concerned that this data collection would require significant data manipulation by the industry in order to respond to the request. The resulting disaggregation is likely to be artificial—and therefore not reliable for individual transactions—and respondents are likely to vary in their choice of method for disaggregating transactions * * * Given the potential data quality problems associated with disaggregated reporting and the questionable need for the disaggregated data, we are concerned that such data may have little practical utility. Should FERC decide to resubmit the ICR for renewal, it should justify its decision to continue to require reporting at a disaggregated level.

(2) Burden: Commenters also believe FERC has significantly underestimated the burden. In particular, the commenters indicated that they would likely have to hire additional staff in order to respond to the data request because of the significant manipulation required to provide data in the format FERC is requesting. After consulting with respondents, FERC should evaluate its burden estimates for reporting and recordkeeping requirements. FERC should provide a list of the names, affiliations, and phone numbers of the respondents it contacted.

Document Availability

The data templates for FERC–721 are available as Excel spreadsheets on the Commission's website under ''Bulk Power Markets'', ''Order Imposing Reporting Requirements on Natural Gas Sales to California Market, RM01–9, issued 7/25/01'', *http://www.ferc.gov/electric/bulkpower.htm*.

David P. Boergers,

Secretary.

[FR Doc. 01–24016 Filed 9–25–01; 8:45 am]

BILLING CODE 6717–01–P

DEPARTMENT OF ENERGY

Federal Energy Regulatory Commission

[Docket No. RP01–460–002]

Canyon Creek Compression Company; Notice of Compliance Filing

September 20, 2001.

Take notice that on September 17, 2001, Canyon Creek Compression Company (Canyon) tendered for filing certain tariff sheets to be part of its FERC Gas Tariff, Third Revised Volume No. 1 (Tariff), to be effective July 23, 2001.

Canyon states that the purpose of this filing is to comply with the Commission's Letter Order in Docket No. RP01–460–001 issued on September 7, 2001.

Canyon requests waiver of the Commission's Regulations to the extent

necessary to permit the tariff sheets submitted to become effective July 23, 2001.

Canyon further states that copies of the filing have been mailed to each of its customers and interested state commissions.

Any person desiring to protest said filing should file a protest with the Federal Energy Regulatory Commission, 888 First Street, NE., Washington, DC 20426, in accordance with Section 385.211 of the Commission's Rules and Regulations. All such protests must be filed in accordance with Section 154.210 of the Commission's Regulations. Protests will be considered by the Commission in determining the appropriate action to be taken, but will not serve to make protestants parties to the proceedings. Copies of this filing are on file with the Commission and are available for public inspection. This filing may also be viewed on the web at *http://www.ferc.gov* using the ''RIMS'' link, select ''Docket#'' and follow the instructions (call 202–208–2222 for assistance). Comments, protests and interventions may be filed electronically via the Internet in lieu of paper. See, 18 CFR 385.2001(a)(1)(iii) and the instructions on the Commission's web site under the ''e-Filing'' link.

David P. Boergers,

Secretary.

[FR Doc. 01–24010 Filed 9–25–01; 8:45 am]

BILLING CODE 6717–01–P

DEPARTMENT OF ENERGY

Federal Energy Regulatory Commission

[Docket No. RP96–389–031]

Columbia Gulf Transmission Company; Notice of Negotiated Rate Filing

September 20, 2001.

Take notice that on September 14, 2001, Columbia Gulf Transmission Company (''Columbia Gulf'') tendered for filing to the Federal Energy Regulatory Commission (''Commission'') the following contracts for disclosure of recently negotiated rate transactions:

FTS–1 Service Agreement No. 71031 between Columbia Gulf Transmission Company and EnergyUSA–TPC Corp. dated August 20, 2001

and

FTS–1 Service Agreement No. 71206 between Columbia Gulf Transmission Company and Reliant Energy Services, Inc. dated August 28, 2001

Transportation service is to commence November 1, 2001 under the Agreements.

Columbia Gulf states that copies of the filing are being made available for public inspection during regular business hours in Columbia Gulf's offices in Houston, Texas and Washington, DC, and that it has served copies of the filing on all parties identified on the official service list in Docket No. RP96–389.

Any person desiring to be heard or to protest said filing should file a motion to intervene or a protest with the Federal Energy Regulatory Commission, 888 First Street, NE., Washington, DC 20426, in accordance with Sections 385.214 or 385.211 of the Commission's Rules and Regulations. All such motions or protests must be filed in accordance with Section 154.210 of the Commission's Regulations. Protests will be considered by the Commission in determining the appropriate action to be taken, but will not serve to make protestants parties to the proceedings. Any person wishing to become a party must file a motion to intervene. Copies of this filing are on file with the Commission and are available for public inspection. This filing may also be viewed on the web at *http://www.ferc.gov* using the ''RIMS'' link, select ''Docketı'' and follow the instructions (call 202–208–2222 for assistance). Comments, protests and interventions may be filed electronically via the Internet in lieu of paper. See, 18 CFR 385.2001(a)(1)(iii) and the instructions on the Commission's web site under the ''e-Filing'' link.

David P. Boergers,

Secretary.

[FR Doc. 01–24013 Filed 9–25–01; 8:45 am]

BILLING CODE 6717–01–P

DEPARTMENT OF ENERGY

Federal Energy Regulatory Commission

[Docket No. ER01–2656–000]

Credit Suisse First Boston International; Notice of Issuance of Order

September 20, 2001.

Credit Suisse First Boston International (Credit Suisse) submitted for filing a rate schedule under which Credit Suisse will engage in wholesale electric power and energy transactions at market-based rates. Credit Suisse also requested waiver of various Commission regulations. In particular, Credit Suisse requested that the Commission grant blanket approval under 18 CFR Part 34 of all future issuances of securities and assumptions of liability by Credit Suisse.

On September 18, 2001, pursuant to delegated authority, the Director, Division of Corporate Applications, Office of Markets, Tariffs and Rates, granted requests for blanket approval under Part 34, subject to the following:

Within thirty days of the date of the order, any person desiring to be heard or to protest the blanket approval of issuances of securities or assumptions of liability by Credit Suisse should file a motion to intervene or protest with the Federal Energy Regulatory Commission, 888 First Street, NE., Washington, DC 20426, in accordance with Rules 211 and 214 of the Commission's Rules of Practice and Procedure (18 CFR 385.211 and 385.214).

Absent a request to be heard in opposition within this period, Credit Suisse is authorized to issue securities and assume obligations or liabilities as a guarantor, indorser, surety, or otherwise in respect of any security of another person; provided that such issuance or assumption is for some lawful object within the corporate purposes of Credit Suisse and compatible with the public interest, and is reasonably necessary or appropriate for such purposes.

The Commission reserves the right to require a further showing that neither public nor private interests will be adversely affected by continued approval of Credit Suisse's issuances of securities or assumptions of liability.

Notice is hereby given that the deadline for filing motions to intervene or protests, as set forth above, is October 18, 2001.

Copies of the full text of the Order are available from the Commission's Public Reference Branch, 888 First Street, NE., Washington, DC 20426. The Order may also be viewed on the on the web at *http://www.ferc.gov* using the ''RIMS'' link, select ''Docket#'' and follow the instructions (call 202–208–2222 for assistance). Comments, protests and interventions may be filed electronically via the Internet in lieu of paper. See, 18 CFR 385.2001(a)(1)(iii) and the instructions on the Commission's web site under the ''e-Filing'' link.

David P. Boergers,

Secretary.

[FR Doc. 01–24018 Filed 9–25–01; 8:45 am]

BILLING CODE 6717–01–P

DEPARTMENT OF ENERGY

Federal Energy Regulatory Commission

[Docket No. RP00–340–002]

Gulf South Pipeline Company, LP; Notice of Tariff Filing

September 20, 2001.

Take notice that on September 14, 2001, Gulf South Pipeline Company, LP (''Gulf South'') tendered for filing the pro forma tariff sheets listed on Attachment A.

Sixth Revised Volume No. 1
See Attachment

In compliance with Order No. 637, Gulf South is submitting pro forma tariff sheets that, when approved, will implement segmentation on its system. Gulf South, with this filing and the pro forma tariff sheets filed on February 1, 2001, is in full compliance with the requirements of Order No. 637.

The parties have agreed that initial comments to Gulf South's segmentation proposal are due on September 28, 2001. Parties filing comments on the 28th have agreed to provide copies of those comments to Gulf South either electronically or by other means so that they are received by Gulf South on that date. Reply comments are due on October 10, 2001.

Any person desiring to be heard or to protest said filing should file a motion to intervene or a protest with the Federal Energy Regulatory Commission, 888 First Street, NE., Washington, DC 20426, in accordance with Sections 385.214 or 385.211 of the Commission's Rules and Regulations. All such motions or protests must be filed in accordance with Section 154.210 of the Commission's Regulations. Protests will be considered by the Commission in determining the appropriate action to be taken, but will not serve to make protestants parties to the proceedings. Any person wishing to become a party must file a motion to intervene. Copies of this filing are on file with the Commission and are available for public inspection. This filing may also be viewed on the web at *http://www.ferc.gov* using the ''RIMS'' link, select ''Docket#'' and follow the instructions (call 202–208–2222 for assistance). Comments, protests and interventions may be filed electronically via the Internet in lieu of paper. See, 18 CFR 385.2001(a)(1)(iii) and the instructions on the Commission's web site under the ''e-Filing'' link.

David P. Boergers,
Secretary.
[FR Doc. 01–24012 Filed 9–25–01; 8:45 am]
BILLING CODE 6717–01–P

DEPARTMENT OF ENERGY

Federal Energy Regulatory Commission

[Docket No. RP01–606–000]

KO Transmission Company; Notice of Tariff Failing and Annual Charge Adjustment

September 20, 2001.

Take notice that on September 17, 2001, KO Transmission Company (KOT) tendered for filing as part of its FERC Gas Tariff, Original Volume No. 1, the following tariff sheet, bearing a proposed effective date of October 1, 2001:

Tenth Revised Sheet No. 10

KOT states that the purpose of the filing is to reflect the new Annual Charge Adjustment (ACA) surcharge to be applied to rates commencing October 1, 2001 of $0.0021 per dekatherm KOT states that copies of its filing will be mailed to all of its firm and interruptible transportation customers.

KOT states that copies of its filing are being mailed to its customers, state commissions and other interested parties.

Any person desiring to be heard or to protest said filing should file a motion to intervene or a protest with the Federal Energy Regulatory Commission, 888 First Street, NE., Washington, DC 20426, in accordance with Sections 385.214 or 385.211 of the Commission's Rules and Regulations. All such motions or protests must be filed on or before September 27, 2001. Protests will be considered by the Commission in determining the appropriate action to be taken, but will not serve to make protestants parties to the proceedings. Any person wishing to become a party must file a motion to intervene. Copies of this filing are on file with the Commission and are available for public inspection. This filing may also be viewed on the web at *http://www.ferc.gov* using the ''RIMS'' link, select ''Docket#'' and follow the instructions (call 202–208–2222 for assistance). Comments, protests and interventions may be filed electronically via the Internet in lieu of paper. See, 18 CFR 385.2001(a)(1)(iii) and the instructions on the Commission's web site under the ''e-Filing'' link.

David P. Boergers,
Secretary.
[FR Doc. 01–24008 Filed 9–25–01; 8:45 am]
BILLING CODE 6717–01–M

DEPARTMENT OF ENERGY

Federal Energy Regulatory Commission

[Docket No. RP00–402–002]

Paiute Pipeline Company; Notice of Correction Filing

September 20, 2001.

Take notice that on September 17, 2001, Paiute Pipeline Company (Paiute) tendered for filing as part of its FERC Gas Tariff, Second Revised Volume No. 1–A, the following tariff sheets:

Substitute First Revised Sheet No. 80
Substitute Second Revised Sheet No. 113A
Substitute First Revised Sheet No. 126

Paiute indicates that the purpose of the filing is to correct certain tariff sheets submitted with its September 10, 2001, compliance filing in Docket No. RP00–402–001.

Paiute states that copies of the filing are being mailed to its customers, state commissions and other interested parties.

Any person desiring to protest said filing should file a protest with the Federal Energy Regulatory Commission, 888 First Street, NE., Washington, DC 20426, in accordance with Section 385.211 of the Commission's Rules and Regulations. All such protests must be filed in accordance with Section 154.210 of the Commission's Regulations. Protests will be considered by the Commission in determining the appropriate action to be taken, but will not serve to make protestants parties to the proceedings. Copies of this filing are on file with the Commission and are available for public inspection. This filing may also be viewed on the web at *http://www.ferc.gov* using the ''RIMS'' link, select ''Docket#'' and follow the instructions (call 202–208–2222 for assistance). Comments, protests and interventions may be filed electronically via the Internet in lieu of paper. See, 18 CFR 385.2001(a)(1)(iii) and the instructions on the Commission's web site under the ''e-Filing'' link.

David P. Boergers,
Secretary.
[FR Doc. 01–24011 Filed 9–25–01; 8:45 am]
BILLING CODE 6717–01–P

DEPARTMENT OF ENERGY

Federal Energy Regulatory Commission

[Docket No. RP01–607–000]

Questar Pipeline Company; Notice of Tariff Filing

September 20, 2001.

Take notice that on September 17, 2001, pursuant to 18 CFR 154.7, Questar Pipeline Company (Questar) tendered for filing and acceptance, to be effective October 15, 2001, Third Revised Sheet No. 202 and Second Revised Sheet No. 203 to First Revised Volume No. 1 of its FERC Gas Tariff (Questar's tariff).

Questar's Questline Access Agreement form in its FERC Gas Tariff, that provides access to Questar's interactive web site, contains outdated language that applied to transportation contracts before they were converted to open-access contracts. Those contracts were converted to open-access contracts in compliance with the Commission's Order No. 636. This filing deletes the outdated language, which comprises Section 15 and related language on Attachment A in Questar's Questline Access Agreement.

Questar states that a copies of this filing are being mailed to its customers, state commissions and other interested parties.

Any person desiring to be heard or to protest said filing should file a motion to intervene or a protest with the Federal Energy Regulatory Commission, 888 First Street, NE., Washington, DC 20426, in accordance with Sections 385.214 or 385.211 of the Commission's Rules and Regulations. All such motions or protests must be filed in accordance with Section 154.210 of the Commission's Regulations. Protests will be considered by the Commission in determining the appropriate action to be taken, but will not serve to make protestants parties to the proceedings. Any person wishing to become a party must file a motion to intervene. Copies of this filing are on file with the Commission and are available for public inspection. This filing may also be viewed on the web at *http://www.ferc.gov* using the ''RIMS'' link, select ''Docket#'' and follow the instructions (call 202–208–2222 for assistance). Comments protests and interventions may be filed electronically via the Internet in lieu of paper. See, 18 CFR 385.2001(a)(1)(iii) and the instructions on the Commission's web site under the ''e-Filing'' link.

David P. Boergers,

Secretary.

[FR Doc. 01–24009 Filed 9–25–01; 8:45 am]

BILLING CODE 6717–01–M

DEPARTMENT OF ENERGY

Federal Energy Regulatory Commission

[Docket No. GT01–33–000]

Transcontinental Gas Pipe Line Corporation; Notice of Overrun Penalty Refund Report

September 20, 2001.

Take notice that on September 14, 2001 Transcontinental Gas Pipe Line Corporation (Transco) tendered for filing with the Federal Energy Regulatory Commission (Commission) a refund report showing that on August 15, 2001, Transco submitted overrun penalty refunds to the affected shippers. The total refund amount, including interest, was $118,345.82.

In accordance with the provisions of Section 154.2(d) of the Commission's regulations, copies of this filing are available for public inspection, during regular business hours in a convenient form and place at Transco's main offices at 2800 Post Oak Boulevard in Houston, Texas.

Any person desiring to be heard or to protest said filing should file a motion to intervene or a protest with the Federal Energy Regulatory Commission, 888 First Street, NE., Washington, DC 20426, in accordance with Sections 385.214 or 385.211 of the Commission's Rules and Regulations. All such motions or protests must be filed on or before September 27, 2001. Protests will be considered by the Commission in determining the appropriate action to be taken, but will not serve to make protestants parties to the proceedings. Any person wishing to become a party must file a motion to intervene. Copies of this filing are on file with the Commission and are available for public inspection. This filing may also be viewed on the web at *http://www.ferc.gov* using the ''RIMS'' link, select ''Docket#'' and follow the instructions (call 202–208–2222 for assistance). Comments, protests and interventions may be filed electronically via the Internet in lieu of paper. See, 18 CFR 385.2001(a)(1)(iii) and the instructions on the Commission's web site under the ''e-Filing'' link.

David P. Boergers,

Secretary.

[FR Doc. 01–24017 Filed 9–25–01; 8:45 am]

BILLING CODE 6717–01–P

DEPARTMENT OF ENERGY

Federal Energy Regulatory Commission

[Docket No. EG01–316–000, et al.]

Panda Tallmadge Power, L.P., et al.; Electric Rate and Corporate Regulation Filings

September 20, 2001.

Take notice that the following filings have been made with the Commission:

1. Panda Tallmadge Power, L.P.

[Docket No. EG01–316–000]

Take notice that on September 18, 2001, Panda Tallmadge Power, L.P. (Panda), with its principal offices at 4100 Spring Valley Road, Suite 1001, Dallas, Texas 75244, filed with the Federal Energy Regulatory Commission, an application for determination of exempt wholesale generator status pursuant to Section 32 of the Public Utility Holding Company Act of 1935, as amended, and Part 365 of the Commission's regulations.

Panda is a Delaware limited partnership, which will construct, own and operate a nominal 1100 MW natural gas-fired generating facility within the region governed by the Mid-American Interconnected Network, Inc. (''MAIN'') and sell electricity at wholesale.

Comment date: October 11, 2001, in accordance with Standard Paragraph E at the end of this notice. The Commission will limit its consideration of comments to those that concern the adequacy or accuracy of the application.

2. Wisconsin Electric Power Company

[Docket No. ER01–3065–000]

Take notice that on September 17, 2001, Wisconsin Electric Power Company (Wisconsin Electric) tendered for filing an electric service agreement under its Coordination Sales Tariff (FERC Electric Tariff, Second Revised Volume No. 2) between Wisconsin Electric and Southern Illinois Power Cooperative (SIPC).

Wisconsin Electric respectfully requests an effective date August 17, 2001.

Copies of the filing have been served on SIPC, the Michigan Public Service Commission, and the Public Service Commission of Wisconsin.

Comment date: October 9, 2001, in accordance with Standard Paragraph E at the end of this notice.

3. Southern Power Company

[Docket No. ER01–3066–000]

Take notice that on September 17, 2001, Southern Power Company (Southern Power) tendered for filing a market-based Purchased Power Agreement by and between Georgia Power Company (Georgia Power) and Southern Power, dated July 26, 2001, (the Agreement). The Agreement (Rate Schedule No. 4) provides the general terms and conditions for capacity and associated energy sales from Southern Power to Georgia Power commencing June 1, 2002.

Comment date: October 9, 2001, in accordance with Standard Paragraph E at the end of this notice.

4. Southern Power Company

[Docket No. ER01–3067–000]

Take notice that on September 17, 2001, Southern Power Company (Southern Power) tendered for filing a market-based Purchased Power Agreement by and between Savannah Electric and Power Company (Savannah Electric) and Southern Power, dated July 26, 2001, (the Agreement). The Agreement (Rate Schedule No. 5) provides the general terms and conditions for capacity and associated energy sales from Southern Power to Savannah Electric commencing June 1, 2002.

Comment date: October 9, 2001, in accordance with Standard Paragraph E at the end of this notice.

5. PacifiCorp

[Docket No. ER01–3069–000]

Take notice that on September 17, 2001, PacifiCorp tendered for filing with the Federal Energy Regulatory Commission (Commission) in accordance with 18 CFR Part 35 of the Commission's Rules and Regulations, a fully executed Confirmation Agreement (Agreement) executed August 13, 2001 between Bonneville Power Administration (Bonneville) and PacifiCorp.

Copies of this filing were supplied to the Washington Utilities and Transportation Commission and the Public Utility Commission of Oregon.

Comment date: October 9, 2001, in accordance with Standard Paragraph E at the end of this notice.

6. Tampa Electric Company

[Docket No. ER01–3070–000]

Take notice that on September 18, 2001, Tampa Electric Company (Tampa Electric) tendered for filing notices of cancellation of its contracts for the purchase and sale of power and energy with Florida Power & Light Company, South Carolina Electric & Gas Company, The Energy Authority, Inc., LG&E Energy Marketing Inc., Exelon Generation Company, LLC, Entergy-Koch Trading, LP, Tennessee Valley Authority, Mirant Americas Energy Marketing, LP, Tenaska Power Services Co., and Virginia Electric and Power Company.

Tampa Electric proposes that the cancellations be made effective on October 29, 2001.

Copies of the filing have been served on the parties to the affected contracts and the Florida Public Service Commission.

Comment date: October 9, 2001, in accordance with Standard Paragraph E at the end of this notice.

7. PacifiCorp

[Docket No. ER01–3071–000]

Take notice that on September 17, 2001, PacifiCorp tendered for filing with the Federal Energy Regulatory Commission (Commission), in accordance with 18 CFR part 35 of the Commission's Rules and Regulations, a Letter Agreement dated July 20, 2001 between Flathead Electric Cooperative and PacifiCorp.

Copies of this filing were supplied to the Washington Utilities and Transportation Commission and the Public Utility Commission of Oregon.

Comment date: October 9, 2001, in accordance with Standard Paragraph E at the end of this notice.

8. Florida Power Corporation

[Docket No. ER01–3072–000]

Take notice that on September 18, 2001, Florida Power Corporation (FPC) tendered for filing with the Federal Energy Regulatory Commission (Commission) netting agreements between FPC and American Electric Power Service Corporation; Electric Clearinghouse, Inc.; and El Paso Merchant Energy L.P. (collectively the Netting Agreements).

Copies of the filing were served upon FPC's counterparties to the Netting Agreements.

Comment date: October 9, 2001, in accordance with Standard Paragraph E at the end of this notice.

9. Carolina Power and Light Company

[Docket No. ER01–3073–000]

Take notice that on September 18, 2001, Carolina Power and Light Company (CP&L) tendered for filing netting agreements with the following counterparties: Allegheny Energy Supply Company, L.L.C.; American Electric Power Service Corporation; Avista Energy, Inc.; AYP Energy, Inc.; Cargill-Alliant, L.L.C.; Cinergy Services, Inc.; Columbia Energy Services Corporation; Coral Power, L.L.C.; Engage Energy US, L.P.; Dayton Power & Light Company; DTE Energy Trading; Duke Energy Trading and Marketing, L.L.C.; Electric Clearinghouse, Inc.; Citizens Power Sales; El Paso Merchant Energy L.P.; The Energy Authority, Inc.; Enron Power Marketing, Inc.; Koch Energy Trading, Inc.; LG&E Marketing, Inc.; Louisville Gas and Electric Company/Kentucky Utilities Company; Merchant Energy Group of the Americas, Inc.; Southern Company Energy Marketing, L.P.; Morgan Stanley Capital Group Inc.; NGE Generation, Inc.; Northern Indiana Public Service Company; OGE Energy Resources, Inc.; PG&E Energy Trading-Power, L.P.; PP&L., Inc.; Rainbow Energy marketing Corporation; NorAm Energy Services, Inc.; Sempra Energy Trading Corp.; Statoil Energy Trading, Inc.; Tenaska Power Service Co.; Virginia Electric and Power Company; Tractebel Energy Marketing, Inc.; and Vitol Gas & Electric LLC (collectively the Netting Agreements).

Copies of the filing were served upon CP&L's counterparties to the Netting Agreements.

Comment date: October 9, 2001, in accordance with Standard Paragraph E at the end of this notice.

Standard Paragraph

E. Any person desiring to be heard or to protest such filing should file a motion to intervene or protest with the Federal Energy Regulatory Commission, 888 First Street, N.E., Washington, D.C. 20426, in accordance with Rules 211 and 214 of the Commission's Rules of Practice and Procedure (18 CFR 385.211 and 385.214). All such motions or protests should be filed on or before the comment date. Protests will be considered by the Commission in determining the appropriate action to be taken, but will not serve to make protestants parties to the proceeding. Any person wishing to become a party must file a motion to intervene. Copies of this filing are on file with the Commission and are available for public inspection. This filing may also be viewed on the web at *http://www.ferc.gov* using the ''RIMS'' link, select ''Docket#'' and follow the instructions (call 202–208–2222 for assistance). Comments, protests and interventions may be filed electronically via the Internet in lieu of paper. See, 18 CFR 385.2001(a)(1)(iii) and the

instructions on the Commission's web site under the ''e-Filing'' link.

David P. Boergers,

Secretary.

[FR Doc. 01–24041 Filed 9–25–01; 8:45 am]

BILLING CODE 6717–01–P

DEPARTMENT OF ENERGY

Federal Energy Regulatory Commission

[Project No. 2661–012]

Pacific Gas and Electric Company; Notice of Availability of Final Environmental Assessment

September 20, 2001.

In accordance with the National Environmental Policy Act of 1969 and the Federal Energy Regulatory Commission's (Commission) regulations, 18 CFR part 380 (Order No. 486, 52 FR 47897), the Office of Energy Projects staff has reviewed the application for new license for the Hat Creek Hydroelectric Project located on Hat Creek, near the town of Cassel, in Shasta County, California, and has prepared a final Environmental Assessment (EA) for the project. About 6.57 acres of the project occupy federal lands, managed by the U.S. Forest Service as part of the Shasta National Forest. In the final EA, the Commission's staff has analyzed the potential environmental impacts of the existing project and has concluded that approval of the project, with appropriate environmental protection measures, would not constitute a major federal action significantly affecting the quality of the human environment.

On August 29, 2000, the Commission staff issued a draft EA for the project, and requested that comments be filed with the Commission within 45 days. Comments were filed by seven entities and are addressed in this final EA for this project.

Copies of the draft and final EA can be viewed at the Commission's Reference and Information Center, Room 2A, 888 First Street, NE., Washington, DC, 20426, or by calling 202–208–1371. Copies of the EA are on file with the Commission and are available for public inspection. The EA may also be viewed on the web at *http://www.ferc.gov* using the ''RIMS'' link, select ''Docket#'' and follow the instructions (call 202–208–2222 for assistance).

David P. Boergers,

Secretary.

[FR Doc. 01–24015 Filed 9–25–01; 8:45 am]

BILLING CODE 6717–01–P

DEPARTMENT OF ENERGY

Federal Regulatory Energy Commission

[Project Nos. 2942–005, 2931–002, 2941–002, 2932–003, and 2897–003]

S.D. Warren Company; Notice of Public Meeting To Discuss the Draft Environmental Impact Statement for the Proposed Relicensing of the Constructed and Operating Presumpscot River Projects in Cumberland County, ME

September 20, 2001.

a. *Date and time of meeting:* Thursday, October 25, 2001, from 7 p.m. to 10 p.m.

b. *Place:* Main cafeteria at Windham High School, 406 Gray Road, Windham, ME.

c. *Purpose of the meeting:* (1) To enable Commission staff to summarize the findings, conclusions, and recommendations of its Draft Environmental Impact Statement (DEIS) for the five Presumpscot River projects, and to answer questions concerning that document; and (2) to obtain public comments (oral and written) on the DEIS.

All interested individuals, organizations, agencies, and tribes are invited to attend the meeting, which will be recorded by a court reporter; consequently, all meeting statements (oral and written) will become part of the Commission's public record of this proceeding. Further, individuals presenting statements for the public record will be required to sign in before the meeting starts and to identify themselves for the record.

Please note that the time that each speaker is allowed will depend upon the number of persons who indicate their intention to provide oral comments; consequently, persons with extensive comments are encouraged to provide their detailed information in writing to the court reporter and to develop an oral summary of five minutes or less.

d. Comment deadline: Interested parties who are unable to attend the public meeting or to prepare comments for that meeting may subsequently file written comments with the Commission. Any comments should be addressed to David P. Boergers, Secretary, Federal Energy Regulatory Commission, 888 First Street, NE., Washington, DC 20246. The first page of all filings should indicate ''Presumpscot River Projects, Nos. 2942–005, 2931–002, 2941–002, 2932–003, and 2897–003'' at the top of the page. To enable Commission staff to consider such comments in its Final Environmental Impact Statement for the Presumpscot River Projects, any correspondence concerning the subject DEIS must be received by the Commission on or before December 4, 2001. Comments, protests and interventions may be filed electronically via the Internet in lieu of paper. See, 18 CFR 385.2001(a)(1)(iii) and the instructions on the Commission's web site under the ''e-Filing'' link.

Participants in this proceeding are reminded that, if they file comments with the Commission, they should serve a copy of their filing on all parties included in the Commission's service list for the Presumpscot River projects.

e. FERC contact: James Haimes (202) 219–27780; e-mail at *james.haimes@ferc.fed.us*

David P. Boergers,

Secretary.

[FR Doc. 01–24014 Filed 9–25–01; 8:45 am]

BILLING CODE 6717–01–P

ENVIRONMENTAL PROTECTION AGENCY

[FRL–7065–5]

Agency Information Collection Activities: Proposed Collection; Comment Request; Reporting Requirements for BEACH Grants

AGENCY: Environmental Protection Agency (EPA).

ACTION: Notice.

SUMMARY: In compliance with the Paperwork Reduction Act (44 U.S.C. 3501 *et seq.*), this document announces that EPA is planning to submit the following proposed Information Collection Request (ICR) to the Office of Management and Budget (OMB): Reporting Requirements for BEACH Act Grants EPA ICR No. 2048.01. Before submitting the ICR to OMB for review and approval, EPA is soliciting comments on specific aspects of the proposed information collection as described below.

DATES: Comments must be submitted on or before November 26, 2001.

ADDRESSES: Interested persons may obtain a copy of the ICR without charge

by contacting EPA staff listed in the section below. Please send comments concerning this notice to the Standards and Health Protection Division (4305), 1200 Pennsylvania Ave. NW., Washington DC, 20460. Please submit electronic comments to kovatch.charles@epa.gov. Overnight delivery or hand delivery should be delivered to the Standards and Health Protection Division at 401 M Street, SW; Room 509 West Tower; Washington, DC, 20460. Please see **SUPPLEMENTARY INFORMATION** for other information about comments.

FOR FURTHER INFORMATION CONTACT: Mr. Charles Kovtach at EPA, telephone 202–260–3754; email *kovatch.charles@epa.gov;* facsimile 202–260–3754.

SUPPLEMENTARY INFORMATION:

Affected entities: Entities potentially affected by this action are those coastal and Great Lakes state, local, and tribal governments which are eligible for BEACH Act grants. These are governments that develop and implement programs for monitoring and notification of coastal (marine and Great Lakes) recreation waters adjacent to beaches or similar points of access that are used by the public.

Title: Reporting Requirements for BEACH Act Grants, EPA ICR No. 2048.01.

Abstract: Congress passed the Beaches Environmental Assessment and Coastal Health (BEACH) Act October 2000, to amend the Clean Water Act in part by adding section 406 ''Coastal Recreation Water Monitoring and Notification.'' Section 406(b) requires EPA to make grants to States and local governments to develop and implement programs for monitoring and public notification for coastal recreation waters adjacent to beaches or similar points of access that are used by the public, if the State or local government satisfies the requirements of the BEACH Act.

Several of these requirements require a grant awardee to collect and submit information to EPA as a condition for receiving the grant. Section 406(b) requires a grant awardee to provide the factors that the awardees use to prioritize funds and a list of waters for which the grant funds will be used. Section 406(b) also requires that a grant awardee's program is consistent with the performance requirements set by EPA under section 406(a); EPA needs information from the grant awardee to determine if the monitoring and notification programs are consistent with these criteria. On July 31, 2001, EPA published the draft performance criteria for BEACH Act grants (66 FR 39510, July 31, 2001). Section 406(b) also requires that a grant awardee submit a report to EPA that describes the data collected as part of a monitoring and notification program and the actions taken to notify the public when water quality standards are exceeded. Section 406(c) requires a grant awardee to identify lists of coastal recreation waters, processes for States to delegate to local governments the responsibility for implementing a monitoring and notification program, and the content of the monitoring and notification program.

The information covered by this draft ICR is required of States and local governments that seek to obtain BEACH Act funding. It allows EPA to properly review State and local governments' monitoring and notification programs to determine if they are eligible for BEACH Act grant funding. This information also enables EPA to fulfill its obligations to make this information available to the public as required by sections 406(e) and (g).

An agency may not conduct or sponsor, and a person is not required to respond to, a collection of information unless it displays a currently valid OMB control number. The OMB control numbers for EPA's regulations are listed in 40 CFR part 9 and 48 CFR Chapter 15.

The EPA would like to solicit comments to:

(i) Evaluate whether the proposed collection of information is necessary for the proper performance of the functions of the agency, including whether the information will have practical utility;

(ii) evaluate the accuracy of the agency's estimate of the burden of the proposed collection of information, including the validity of the methodology and assumptions used;

(iii) enhance the quality, utility, and clarity of the information to be collected; and

(iv) minimize the burden of the collection of information on those who are to respond, including through the use of appropriate automated electronic, mechanical, or other technological collection techniques or other forms of information technology, e.g., permitting electronic submission of responses.

Burden Statement: The annual public reporting and record keeping burden for this collection of information is estimated to average 408 hours per response for the first year of the implementation grant program, 281 hours per response in the second year, and 274 hours in the third year. This burden represents a report that is submitted once each year. For the first year of the grant program, 34 States and territories will be eligible for the grants. In subsequent years, authorized tribes will become eligible and local governments may become eligible if their State monitoring and notification programs are not consistent with the section 406(a) performance criteria.

Burden means the total time, effort, or financial resources expended by persons to generate, maintain, retain, or disclose or provide information to or for a Federal agency. This includes the time needed to review instructions; develop, acquire, install, and utilize technology and systems for the purposes of collecting, validating, and verifying information, processing and maintaining information, and disclosing and providing information; adjust the existing ways to comply with any previously applicable instructions and requirements; train personnel to be able to respond to a collection of information; search data sources; complete and review the collection of information; and transmit or otherwise disclose the information.

Comments: You may submit comments by mail, e-mail, or delivered by hand to the addresses shown in the **ADDRESSES** section of this notice. EPA will not accept facsimiles (faxes). If you mail or hand deliver comments, please send an original and three copies of your comments and enclosures (including references). If you want receipt of your comments acknowledged, you must include a self-addressed, stamped envelope. You may also submit your comments by sending an e-mail to *kovatch.charles@epa.gov* or by disk. If you do, you must submit electronic comments as an ASCII file, or a WordPerfect 5.1, WordPerfect 6.1, or WordPerfect 8 file avoiding the use of special characters and any form on encryption, and identify these comments by the ICR No. 2048.01 on the subject line. You may file electronic comments on this notice at many Federal Depository Libraries. You should not send confidential business information by e-mail.

Dated: September 17, 2001.

Geoffrey H. Grubbs,

Director, Office of Science and Technology.

[FR Doc. 01–24063 Filed 9–25–01; 8:45 am]

BILLING CODE 6560–50–P

ENVIRONMENTAL PROTECTION AGENCY

[FRL–7065–6]

Notice of Prevention of Significant Deterioration Final Determination for Chehalis Generating Facility

AGENCY: Environmental Protection Agency (''EPA'')

ACTION: Notice of Final Action

SUMMARY: This document announces that on August 20, 2001, the Environmental Appeals Board (''EAB'') of EPA denied a petition for review of a permit issued for the Chehalis Generating Facility by EPA, Region 10 and the State of Washington's Energy Facility Site Evaluation Council (''EFSEC'') pursuant to EPA's Prevention of Significant Deterioration of Air Quality (''PSD'') regulations, under 40 CFR 52.21.

DATES: The effective date for the EAB's decision is August 20, 2001. Judicial review of this permit decision, to the extent it is available pursuant to section 307(b)(1) of the Clean Air Act (''CAA''), may be sought by filing a petition for review in the United States Court of Appeals for the Ninth Circuit within 60 days of September 26, 2001.

ADDRESSES: The documents relevant to the above action are available for public inspection during normal business hours at the following address: EPA, Region 10, 1200 Sixth Avenue, Seattle, Washington 98101. To arrange viewing of these documents, call Daniel Meyer at (206) 553–4150.

FOR FURTHER INFORMATION CONTACT: Daniel Meyer, EPA, Region 10, 1200 Sixth Avenue (OAQ–107), Seattle, Washington, 98101.

SUPPLEMENTARY INFORMATION: This supplemental information is organized as follows:

A. What Action is EPA Taking?
B. What is the Background Information?
C. What did the EAB Decide?

A. What Action Is EPA Taking?

We are notifying the public of a final decision by EPA's EAB on a permit issued by EPA Region 10 and EFSEC (''permitting authorities'') pursuant to the PSD regulations found at 40 CFR 52.21.

B. What Is the Background Information?

In 1997, the permitting authorities jointly issued a PSD permit pursuant to Section 165 of the CAA, 42 U.S.C. 7475, 40 CFR 52.21, and the terms and conditions of EFSEC's delegation of authority from EPA Region 10 under 40 CFR 52.21(u), for what ultimately will be a 520-megawatt electric power generation facility. The facility is subject to PSD for nitrogen oxides (''NO_X''), carbon monoxide (''CO''), volatile organic compounds (''VOC''), and particulate matter (''PM''). The original PSD permit required installation of Best Available Control Technology (''BACT'') which was determined to be advanced dry-low NO_X combuster technology and included a short-term emission limit for NO_X of 9.9 parts per million dry volume (''ppmdv''). In November, 1998, the permitting authorities jointly extended the original PSD permit. The extension authorized Chehalis Power to commence construction by no later than June 18, 2000. On May 18, 2000, EFSEC published a notice informing the public of a proposed permit amendment for the Chehalis Generating Facility. In March, 2001, EPA Region 10 and Chehalis Power signed an administrative order on consent that required Chehalis Power to request additional revisions to its PSD permit, including the installation of select catalytic reduction (''SCR'') to control NO_X emissions, as well as a reduction in both annual and short-term NO_X emissions. The permitting authorities approved an amended PSD permit in April, 2001, reflecting these changes. Subsequent to issuance of the PSD permit amendment, REBOUND (''Petitioner''), which represents the Seattle/King County Building & Construction Trades Council, filed a petition challenging the PSD permit amendment.

C. What Did the EAB Decide?

On August 20, 2001, the EAB denied review of the petition because Petitioner failed to show clear error or other reason for the EAB to grant review with respect to: (1) the permitting authorities' determination that no new BACT analysis was required for NO_X, CO, VOC, or PM, in light of Chehalis Power's agreement to install SCR and to reduce its short-term emission limit for NO_X from 9.9 to 3 ppmdv with 10ppmdv ammonia slip; (2) the permitting authorities' decision not to reopen the public comment period in order to allow for comment on changes made to the amended PSD permit relating to startup and shutdown NO_X emissions and ammonia emissions, because Petitioner had previously commented on startup and shutdown NO_X emissions and ammonia emissions; and (3) EFSEC's failure to include a description of appeal rights in the amended PSD permit as mandated by the 1992 delegation of authority from EPA Region 10 to EFSEC, because Petitioner did not properly preserve this issue for review. The EAB did not address the merits of Petitioner's claim that Chehalis Power had not commenced construction within 18 months of receiving its PSD permit extension because Petitioner did not address any of the specific factors discussed in EFSEC's response to comments explaining its commencement of construction determination.

Pursuant to 40 CFR 124.19(f)(1), for purposes of judicial review, final Agency action occurs when a final PSD permit is issued and Agency review procedures are exhausted. This notice is being published pursuant to 40 CFR 124.19(f)(2), which requires notice of any final agency action regarding a permit to be published in the **Federal Register**. This notice being published today in the **Federal Register** constitutes notice of the final Agency action denying review of the PSD permit and, consequently, notice of the permitting authorities' issuance of an amended PSD permit No. EFSEC/95–02 Amendment 1 to Chehalis Power. If available, judicial review of these determinations under section 307(b)(1) of the CAA may be sought only by the filing of a petition for review in the United States Court of Appeals for the Ninth Circuit, within 60 days from the date on which this notice is published in the **Federal Register**. Under section 307(b)(2) of the Act, this determination shall not be subject to later judicial review in any civil or criminal proceedings for enforcement.

Dated: September 17, 2001.

Ronald A. Kreizenbeck,

Acting Regional Administrator, Region 10.

[FR Doc. 01–24062 Filed 9–25–01; 8:45 am]

BILLING CODE 6560–50–P

ENVIRONMENTAL PROTECTION AGENCY

[FRL–7063–4]

Meeting of the Mobile Sources Technical Review Subcommittee

AGENCY: Environmental Protection Agency (EPA).

ACTION: Notice of meeting.

SUMMARY: Pursuant to the Federal Advisory Committee Act, Public Act, Public Law 92–463, notice is hereby given that the Mobile Sources Technical Review Subcommittee of the Clean Air Act Advisory Committee will meet three times annually. This is an open meeting. The theme will be ''The Energy Plan''

and will include presentations from EPA and other outside organizations. The preliminary agenda for this meeting will be available on the Subcommittee's website in early October. Draft minutes from the previous meetings are available on the Subcommittee's website now at: www.epa.gov/oar/caaac/mobile_sources-caaac.html

DATES: Wednesday, October 24 from 9 am. to 3:30 pm. Registration begins at 8:30 am.

ADDRESSES: The meeting will be held at the Holiday Inn Fairlane-Dearborn, 5801 Southfield Service Drive, Detroit, MI 48228.

FOR FURTHER INFORMATION CONTACT:

For technical information: Ms. Cheryl L. Hogan, Alternate Designated Federal Officer, Certification and Compliance Division, U.S. EPA, 2000 Traverwood Drive, Ann Arbor, MI 48105, Ph: 734/214–4402, FAX: 734/214–4053, email: hogan.cheryl@epa.gov.

For logistical and administrative information: Ms. Mary F. Green, FACA Management Officer, U.S. EPA 2000 Traverwood Drive, Ann Arbor, Michigan, Ph: 734/214–4411, Fax: 734/214–4053, email: green.mary@epa.gov.

Background on the work of the Subcommittee is available at: http://transaq.ce.gatech.edu/epatac.

For more current information: www.epa.gov/oar/caaac/mobile_sources-caaac.html.

Individuals or organizations wishing to provide comments to the Subcommittee should submit them to Ms. Hogan at the address above by October 10, 2001. The Mobile Sources Technical Review Subcommittee expects that public statements presented at its meetings will not be repetitive of previously submitted oral or written statements.

SUPPLEMENTARY INFORMATION: During this meeting, the Subcommittee may also hear progress reports from some of its workgroups as well as updates and announcements on activities of general interest to attendees.

Dated: September 17, 2001.

Lori Stewart,

Acting Director, Office of Transportation and Air Quality.

[FR Doc. 01–23639 Filed 9–25–01; 8:45 am]

BILLING CODE 6560–50–P

ENVIRONMENTAL PROTECTION AGENCY

[OPPTS–00744; FRL–6804–6]

Forum on State and Tribal Toxics Action (FOSTTA); Open Meetings; Notice of Public Meeting

AGENCY: Environmental Protection Agency (EPA).

ACTION: Notice of public meeting.

SUMMARY: The Chemical Information and Management, Pollution Prevention, Tribal Affairs, and Toxics Release Inventory Projects, components of the Forum on State and Tribal Toxics Action (FOSTTA), will hold meetings October 22–23, 2001. This notice announces the location and times for the meetings and sets forth some tentative agenda topics. The National Conference of State Legislatures (NCSL) and the Environmental Protection Agency's (EPA) Office of Pollution Prevention and Toxics (OPPT) are co-sponsoring the meetings. As part of a cooperative agreement, NCSL facilitates ongoing efforts of the states and tribes to identify, discuss, and address toxics-related issues, and to continue the dialogue on how federal environmental programs can best be implemented.

DATES: The four components will meet concurrently October 22, 2001, from 8 a.m. to 5 p.m. and October 23, 2001, from 8 a.m. to noon. A plenary session is being planned for all the participants on Monday, October 22, 2001, from 8 a.m. to 9:30 a.m. The topic of the session has not been determined.

ADDRESSES: The meetings will be held at the Washington Court Hotel, 525 New Jersey Avenue, NW., Washington, DC. The hotel is about two blocks from Union Station.

FOR FURTHER INFORMATION CONTACT: *For general information contact:* Barbara Cunningham, Acting Director, Environmental Assistance Division, Office of Pollution Prevention and Toxics (7408), Environmental Protection Agency, 1200 Pennsylvania Avenue, NW., Washington, DC 20460; telephone number: (202) 260–1761.

For technical information contact: George Hagevik, National Conference of State Legislatures, 1560 Broadway, Suite 700, Denver, CO 80202; telephone: (303) 839–0273 and FAX: (303) 863–8003; e-mail: george.hagevik@ncsl.org or Darlene Harrod, Environmental Assistance Division (7408M), Office of Pollution Prevention and Toxics, Environmental Protection Agency, 1200 Pennsylvania Avenue, NW., Washington, DC 20460; telephone: (202) 564–8814 and FAX: (202) 564–8813; e-mail: harrod.darlene@epamail.epa.gov.

SUPPLEMENTARY INFORMATION:

I. Does This Notice Apply to Me?

This action is directed to the public in general. This action may, however, be of interest to all parties interested in FOSTTA and hearing more about the perspectives of the States and Tribes on EPA programs and the information exchange regarding important issues related to human health and environmental exposure to toxics. Since other entities may also be interested, the Agency has not attempted to describe all the specific entities that may be affected by this action. However, in the interest of time and efficiency, the meetings are structured to provide maximum opportunity for state, tribal, and EPA participants to discuss items on the predetermined agenda. At the discretion of the chair, an effort will be made to accommodate participation by observers attending the proceedings. If you have any questions regarding the applicability of this action to a particular entity, consult the technical people listed under **FOR FURTHER INFORMATION CONTACT.**

II. How Can I Get Additional Information, Including Copies of This Document or Other Related Documents?

1. *Electronically.* You may obtain electronic copies of this document from the EPA Internet Home Page. Go to http://www.epa.gov/fedrgstr/nfs_comm.htm, select ''Laws and Regulations,'' and then look up the entry for this document under ''**Federal Register**—Environmental Documents. You can also go directly to the **Federal Register** at http://www.access.gpo.gov/su_docs/aces/aces140.html. You can obtain certain other related documents that might be available electronically, from the NCSL Web site at http://www.ncsl.org/programs/esnr/fostta/fostta.htm.

2. *Facsimile.* Notify the contacts listed under **FOR FURTHER INFORMATION CONTACT** above if you would like any of the documents sent to you via fax.

III. Purpose of Meeting

As part of FOSTTA, the Chemical Information and Management Project focuses on EPA's Chemical Right-to-Know Program and works to develop a more coordinated effort involving federal, state, and tribal agencies. The Pollution Prevention Project promotes the prevention ethic across society, helping companies incorporate P2 approaches and techniques and integrating P2 into mainstream environmental activities at both the

federal level and among the states. The Tribal Affairs Project concentrates on chemical and prevention issues that are most relevant to the tribes, including lead control and abatement, subsistence lifestyle, and hazard communications and outreach. Under the Emergency Planning and Community Right-to-Know Act, EPA, the states, and tribes share responsibility for handling toxic chemical release information and making it available to the public through the Toxics Release Inventory. Through the Toxics Release Inventory Project, EPA and the state TRI program staff have an opportunity to discuss what works and what does not in their respective programs and to share ideas for the future evolution of the program.

IV. Purpose of Meeting

This unit provides the tentative agenda items identified by NCSL, the states, and the tribes:

1. Update on the High Production Volume Challenge Program and the Voluntary Children's Chemical Evaluation Program (Chemical Information and Management Project)

2. Pollution Prevention Integration Opportunities (Pollution Prevention Project)

3. Lead Workshops/Guidance Documents (Toxics Release Inventory Project)

4. Tribal Risk Assessment and Subsistence Summit (Tribal Affairs Project)

5. Other topics as appropriate.

V. How Can I Participate in This Meeting?

You may submit a request to participate in this meeting in the mail or electronically to the names under the **FOR FURTHER INFORMATION CONTACT.** Do not submit any information in your request that is considered Confidential Business Information. Your request must be received by EPA on or before October 19, 2001.

List of Subjects

Environmental protection.

Dated: September 18, 2001.

Barbara Cunningham,

Acting Director, Environmental Assistance Division, Office of Pollution Prevention and Toxics.

[FR Doc. 01–24059 Filed 9–25–01; 8:45 am]

BILLING CODE 6560–50–P

ENVIRONMENTAL PROTECTION AGENCY

[OPP–34237A; FRL–6782–6]

Atrazine; Availability of Preliminary Risk Assessment

AGENCY: Environmental Protection Agency (EPA).

ACTION: Notice.

SUMMARY: This notice announces the availability of documents that were developed as part of EPA's pilot public participation process for making reregistration eligibility decisions for the organophosphate and certain other, non-organophosphate pesticides and for tolerance reassessments consistent with the Federal Food, Drug, and Cosmetic Act (FFDCA), as amended by the Food Quality Protection Act of 1996 (FQPA). These documents are the preliminary ecological fate and effects risk assessment and related documents for atrazine. This notice also starts a 60–day public comment period for the preliminary risk assessment. Comments are to be limited to issues directly associated with atrazine and raised by the risk assessment or other documents placed in the docket. By allowing access and opportunity for comment on the preliminary risk assessment, EPA is seeking to strengthen stakeholder involvement and help ensure that our decisions under FQPA are transparent and based on the best available information. The tolerance reassessment process will ensure that the United States continues to have the safest and most abundant food supply. The Agency cautions that risk assessments at this stage are preliminary only and that further refinements of the risk assessment may be appropriate for this pesticide. This document reflects only the work and analysis conducted as of the time it was produced and it is appropriate that, as new information becomes available and/or additional analyses are performed, the conclusions it contains may change. Concurrent with the Office of Pesticide Programs' release of the preliminary ecological fate and effects risk assessment for atrazine announced in this notice, EPA's Office of Water is publishing its draft aquatic life criteria document for atrazine elsewhere in this issue of the **Federal Register**.

DATES: Comments, identified by the docket control number OPP–34237A for atrazine, must be received on or before November 26, 2001.

ADDRESSES: Comments may be submitted by mail, electronically, or in person. Please follow the detailed instructions for each method as provided in Unit I. of the **SUPPLEMENTARY INFORMATION**. To ensure proper receipt by EPA, it is imperative that you identify the docket control number for atrazine in the subject line on the first page of your response.

FOR FURTHER INFORMATION CONTACT: Kimberly Lowe, Special Review and Reregistration Division (7508C), Office of Pesticide Programs, Environmental Protection Agency, 1200 Pennsylvania Ave., NW., Washington, DC 20460; telephone number: (703) 308–8059; e-mail address: lowe.kimberly@epa.gov.

SUPPLEMENTARY INFORMATION:

I. General Information

A. Does this Action Apply to Me?

This action is directed to the public in general. This action may, however, be of interest to those persons who are or may be required to conduct testing of chemical substances under the FFDCA, or the Federal Insecticide, Fungicide, and Rodenticide Act (FIFRA). Since other entities may also be interested, the Agency has not attempted to describe all the specific entities that may be affected by this action. If you have any questions regarding the applicability of this action to a particular entity, consult the person listed under **FOR FURTHER INFORMATION CONTACT**.

B. How Can I Get Additional Information, Including Copies of this Document and Other Related Documents?

1. *Electronically*. You may obtain electronic copies of this document, and certain other related documents that might be available electronically, from the EPA Internet Home Page at http://www.epa.gov/. On the Home Page select ''Laws and Regulations,'' ''Regulations and Proposed Rules,'' and then look up the entry for this document under the '' **Federal Register**—Environmental Documents.'' You can also go directly to the **Federal Register** listings at http://www.epa.gov/fedrgstr/. In addition, copies of the preliminary risk assessments for atrazine may also be accessed at http://www.epa.gov/pesticides/reregistration/status.htm.

2. *In person*. The Agency has established an official record for this action under docket control number OPP–34237A. The official record consists of the documents specifically referenced in this action, and other information related to this action, including any information claimed as Confidential Business Information (CBI). This official record includes the documents that are physically located in the docket, as well as the documents

that are referenced in those documents. The public version of the official record does not include any information claimed as CBI. The public version of the official record, which includes printed, paper versions of any electronic comments submitted during an applicable comment period is available for inspection in the Public Information and Records Integrity Branch (PIRIB), Rm. 119, Crystal Mall #2, 1921 Jefferson Davis Hwy., Arlington, VA, from 8:30 a.m. to 4 p.m., Monday through Friday, excluding legal holidays. The PIRIB telephone number is (703) 305–5805.

C. How and to Whom Do I Submit Comments?

You may submit comments through the mail, in person, or electronically. To ensure proper receipt by EPA, it is imperative that you identify the docket control number for atrazine, OPP–34237A, in the subject line on the first page of your response.

1. *By mail*. Submit your comments to: Public Information and Records Integrity Branch (PIRIB), Information Resources and Services Division (7502C), Office of Pesticide Programs (OPP), Environmental Protection Agency, 1200 Pennsylvania Ave., NW., Washington, DC 20460.

2. *In person or by courier*. Deliver your comments to: Public Information and Records Integrity Branch (PIRIB), Information Resources and Services Division (7502C), Office of Pesticide Programs (OPP), Environmental Protection Agency, Rm. 119, Crystal Mall #2, 1921 Jefferson Davis Hwy., Arlington, VA. The PIRIB is open from 8:30 a.m. to 4 p.m., Monday through Friday, excluding legal holidays. The PIRIB telephone number is (703) 305–5805.

3. *Electronically*. You may submit your comments electronically by e-mail to: opp-docket@epa.gov, or you can submit a computer disk as described above. Do not submit any information electronically that you consider to be CBI. Avoid the use of special characters and any form of encryption. Electronic submissions will be accepted in WordPerfect 6.1/8.0 or ASCII file format. All comments in electronic form must be identified by docket control number OPP–34237A. Electronic comments may also be filed online at many Federal Depository Libraries.

D. How Should I Handle CBI that I Want to Submit to the Agency?

Do not submit any information electronically that you consider to be CBI. You may claim information that you submit to EPA in response to this document as CBI by marking any part or all of that information as CBI. Information so marked will not be disclosed except in accordance with procedures set forth in 40 CFR part 2. In addition to one complete version of the comment that includes any information claimed as CBI, a copy of the comment that does not contain the information claimed as CBI must be submitted for inclusion in the public version of the official record. Information not marked confidential will be included in the public version of the official record without prior notice. If you have any questions about CBI or the procedures for claiming CBI, please consult the person listed under **FOR FURTHER INFORMATION CONTACT**.

E. What Should I Consider as I Prepare My Comments for EPA?

You may find the following suggestions helpful for preparing your comments:

1. Explain your views as clearly as possible.
2. Describe any assumptions that you used.
3. Provide copies of any technical information and/or data you used that support your views.
4. If you estimate potential burden or costs, explain how you arrived at the estimate that you provide.
5. Provide specific examples to illustrate your concerns.
6. Offer alternative ways to improve the notice.
7. Make sure to submit your comments by the deadline in this document.
8. To ensure proper receipt by EPA, be sure to identify the docket control number assigned to this action in the subject line on the first page of your response. You may also provide the name, date, and **Federal Register** citation.

II. Background

A. What Action is the Agency Taking?

EPA is making available a preliminary risk assessment that has been developed as part of EPA's process for making reregistration eligibility decisions for the organophosphate and other pesticides and for tolerance reassessments consistent with the FFDCA, as amended by the FQPA. The Agency's preliminary ecological fate and effects risk assessment and other related documents for atrazine are available in the individual pesticide dockets. Earlier, on February 14, 2001 (66 FR 10287) (FRL–6765–3), EPA released the preliminary human health risk assessment and related documents for atrazine through the docket. As additional comments, reviews, and risk assessment modifications become available, these will also be docketed for atrazine.

The Agency cautions that the atrazine risk assessment is preliminary only and that further refinements may be appropriate. This document reflects only the work and analysis conducted as of the time it was produced and it is appropriate that, as new information becomes available and/or additional analyses are performed, the conclusions it contains may change.

Concurrent with the Office of Pesticide Programs release of the preliminary ecological fate and effects risk assessment for atrazine announced in this notice, EPA's Office of Water is publishing its draft aquatic life criteria document for atrazine, elsewhere in this issue of the **Federal Register**. The Offices of Water and Pesticide Programs currently are consulting on their respective ecological risk assessment methodologies. Although there are similarities in the two offices' approaches, differences remain. When the consultation is completed, revisions to the atrazine ecological fate and effects preliminary risk assessment may be necessary. While the consultation is underway, both offices are making their respective ecological risk assessments for atrazine available to the public and requesting comment on their respective methodologies. It would be helpful if comments regarding the methodology that are made to one office are also made to the other.

The Agency is providing an opportunity, through this notice, for interested parties to provide written comments and input to the Agency on the preliminary risk assessment for the chemical specified in this notice. Such comments and input could address, for example, the availability of additional data to further refine the risk assessment, such as percent crop treated information or submission of residue data from food processing studies, or could address the Agency's risk assessment methodologies and assumptions as applied to this specific chemical. Comments should be limited to issues raised within the preliminary risk assessment and associated documents. EPA will provide other opportunities for public comment on other science issues associated with the pesticide tolerance reassessment program. Failure to comment on any such issues as part of this opportunity will in no way prejudice or limit a commenter's opportunity to participate fully in later notice and comment processes. All comments should be submitted by November 26, 2001 using

the methods in Unit I. of the **SUPPLEMENTARY INFORMATION.** Comments will become part of the Agency record for atrazine.

List of Subjects

Environmental protection, Chemicals, Pesticides and pests.

Dated: September 18, 2001.

Lois A. Rossi,

Director, Special Review and Reregistration Division, Office of Pesticide Programs.

[FR Doc. 01–23924 Filed 9–25–01; 8:45 a.m.]

BILLING CODE 6560–50–S

ENVIRONMENTAL PROTECTION AGENCY

[OPP–00742; FRL–6805–5]

Ethion; Receipt of Request for Registration Cancellations

AGENCY: Environmental Protection Agency (EPA).

ACTION: Notice.

SUMMARY: In accordance with section 6(f)(1) of the Federal Insecticide, Fungicide, and Rodenticide Act (FIFRA), as amended, EPA is issuing a notice of receipt of request by Cheminova AGRO A/S, FMC Corporation and Micro-Flo Corporation to cancel the registrations for all of their products containing O,O,O,O-tetaethyl S,S-methylene bis(phosphorodithioate) (ethion). EPA will decide whether to approve the request after consideration of public comment.

DATES: Comments on the requested cancellation of product and use registrations must be submitted to the address provided below by October 26, 2001.

FOR FURTHER INFORMATION CONTACT: Richard Dumas, Special Review and Reregistration Division (7508C), Office of Pesticide Programs, Environmental Protection Agency, 1200 Pennsylvania Ave., NW., Washington, DC 20460; telephone number: (703) 308–8015; fax number: (703) 308–8041; e-mail address: dumas.richard@epa.gov.

SUPPLEMENTARY INFORMATION:

I. General Information

A. Does this Action Apply to Me?

This action is directed to the public in general. Although this action may be of particular interest to persons who produce or use pesticides, the Agency has not attempted to describe all the specific entities that may be affected by this action. If you have any questions regarding the information in this notice, consult the person listed under **FOR FURTHER INFORMATION CONTACT.**

B. How Can I Get Additional Information, Including Copies of this Document and Other Related Documents?

1. *Electronically.* You may obtain electronic copies of this document, and certain other related documents that might be available electronically, from the EPA Internet Home Page at http://www.epa.gov/. To access this document, on the Home Page select ''Laws and Regulations'' and then look up the entry for this document under the ''**Federal Register**—Environmental Documents.'' You can also go directly to the **Federal Register** listings at http://www.epa.gov/fedrgstr/.

2. *In person.* The Agency has established an official record for this action under docket control number OPP–00742. The official record consists of the documents specifically referenced in this action, any public comments received during an applicable comment period, and other information related to this action, including any information claimed as Confidential Business Information (CBI). This official record includes the documents that are physically located in the docket, as well as the documents that are referenced in those documents. The public version of the official record does not include any information claimed as CBI. The public version of the official record, which includes printed, paper versions of any electronic comments submitted during an applicable comment period, is available for inspection in the Public Information and Records Integrity Branch (PIRIB), Rm. 119, Crystal Mall #2, 1921 Jefferson Davis Hwy., Arlington, VA, from 8:30 a.m. to 4 p.m., Monday through Friday, excluding legal holidays. The PIRIB telephone number is (703) 305–5805.

C. How and to Whom Do I Submit Comments?

You may submit comments through the mail, in person, or electronically. To ensure proper receipt by EPA, it is imperative that you identify docket control number OPP–00742 in the subject line on the first page of your response.

1. *By mail.* Submit your comments to: Public Information and Records Integrity Branch (PIRIB), Information Resources and Services Division (7502C), Office of Pesticide Programs (OPP), Environmental Protection Agency, 1200 Pennsylvania Ave., NW., Washington, DC 20460.

2. *In person or by courier.* Deliver your comments to: Public Information and Records Integrity Branch (PIRIB), Information Resources and Services Division (7502C), Office of Pesticide Programs (OPP), Environmental Protection Agency, Rm. 119, Crystal Mall #2, 1921 Jefferson Davis Hwy., Arlington, VA. The PIRIB is open from 8:30 a.m. to 4 p.m., Monday through Friday, excluding legal holidays. The PIRIB telephone number is (703) 305–5805.

3. *Electronically.* You may submit your comments electronically by e-mail to: opp-docket@epa.gov, or you can submit a computer disk as described above. Do not submit any information electronically that you consider to be CBI. Avoid the use of special characters and any form of encryption. Electronic submissions will be accepted in WordPerfect 6.1/8.0 or ASCII file format. All comments in electronic form must be identified by docket control number OPP–00742. Electronic comments may also be filed online at many Federal Depository Libraries.

D. How Should I Handle CBI that I Want to Submit to the Agency?

Do not submit any information electronically that you consider to be CBI. You may claim information that you submit to EPA in response to this document as CBI by marking any part or all of that information as CBI. Information so marked will not be disclosed except in accordance with procedures set forth in 40 CFR part 2. In addition to one complete version of the comment that includes any information claimed as CBI, a copy of the comment that does not contain the information claimed as CBI must be submitted for inclusion in the public version of the official record. Information not marked confidential will be included in the public version of the official record without prior notice. If you have any questions about CBI or the procedures for claiming CBI, please consult the person listed under **FOR FURTHER INFORMATION CONTACT.**

E. What Should I Consider as I Prepare My Comments for EPA?

You may find the following suggestions helpful for preparing your comments:

1. Explain your views as clearly as possible.

2. Describe any assumptions that you used.

3. Provide copies of any technical information and/or data you used that support your views.

4. If you estimate potential burden or costs, explain how you arrived at the estimate that you provide.

5. Provide specific examples to illustrate your concerns.

6. Offer alternative ways to improve the notice or collection activity.

7. Make sure to submit your comments by the deadline in this notice.

8. To ensure proper receipt by EPA, be sure to identify the docket control number assigned to this action in the subject line on the first page of your response. You may also provide the name, date, and **Federal Register** citation.

II. What Action is the Agency Taking

This notice announces receipt by EPA of requests from Cheminova A/S, FMC Corporation, and Micro-Flo Corporation to cancel five pesticide products registered under section 3 of FIFRA. These registrations are listed in Table 1.

A. Background Information

Ethion is an organophosphate insecticide registered for use on citrus in Florida and Texas, and cattle in eartags.

On August 24, August 29, and August 31, 2001, Micro-Flo Corporation, FMC Corporation, and Cheminova A/S, respectively, signed a Memorandum of Agreement with EPA requesting voluntary cancellation pursuant of 6(f) of FIFRA of all their registrations for products containing ethion. The effective cancellation dates are intended to be no earlier than October 1, 2003, for manufacturing use products and December 31, 2003, for end-use products.

B. Requests for Voluntary Cancellation

Under section 6(f)(1)(A) of FIFRA, registrants may request, at any time, that their pesticide registrations be canceled or amended to terminate one or more pesticide uses. Section 6(f)(1)(B) of FIFRA requires that before acting on a request for voluntary cancellation, EPA must provide a 30–day public comment period on the request for voluntary cancellation. In addition, section 6(f)(1)(C) of FIFRA requires that EPA provide a 180–day comment period on a request for voluntary termination of any minor agricultural use before granting the request, unless: (1) The registrants request a waiver of the comment period, or (2) the Administrator determines that continued use of the pesticide would pose an unreasonable adverse effect on the environment. The registrant has requested that EPA waive the 180–day comment period. EPA is granting the registrants' request to waive the 180–day comment period. EPA anticipates granting the cancellation request shortly after considering the comments recieved during the 30–day comment period for this notice. The registrations for which cancellations were requested are identified in Table 1.

TABLE 1.—REGISTRATIONS WITH PENDING REQUESTS FOR CANCELLATION

Company	Registration Number	Product
Cheminova A/S	4787–10	Cheminova Ethion Technical
FMC Corporation	279–2280	Ethion Technical Insecticide
	279–1254	Ethion 4 Miscible
Micro-Flo Corporation	51036–89	Ethion 4 EC
	51036–90	Ethion 8 EC

III. What is the Agency's Authority for Taking this Action?

Section 6(f)(1) of FIFRA provides that a registrant of a pesticide product may at any time request that any of its pesticide registrations be canceled. FIFRA section 6(f)(1) further provides that, before acting on the request, EPA must publish a notice of receipt of any such request in the **Federal Register**, make reasonable efforts to inform persons who rely on the pesticide for minor agricultural uses, and provide a 30–day period in which the public may comment. Thereafter, the Administrator may approve such a request.

IV. Procedures for Withdrawal of Request

Registrants who choose to withdraw a request for cancellation must submit such withdrawal in writing to the person listed under **FOR FURTHER INFORMATION CONTACT**. This written withdrawal of the request for cancellation will apply only to the applicable FIFRA section 6(f)(1) request listed in this notice. A withdrawal shall have no effect on any cancellation that has already been ordered; the effective date of such cancellation and all other provisions of any earlier cancellation action shall remain in effect. The withdrawal request must also include a commitment to pay any reregistration fees due, and to fulfill any applicable unsatisfied data requirements.

V. Provisions for Disposition of Existing Stocks

The Agency intends to prohibit the sale and distribution of existing stocks of ethion manufacturing products on October 1, 2003, and to prohibit the use of manufacturing use products on December 31, 2003. The Agency intends to prohibit the sale and distribution of end-use product on October 1, 2004, and to prohibit the use of end-use product on December 31, 2004. This is in accordance with the Agency's statement of policy as prescribed in the **Federal Register** of June 26, 1991 (56 FR 29362) (FRL–3846–4). Exceptions will be made if EPA determines that a product poses a risk concern, or is in noncompliance with reregistration requirements, or is subject to a Data Call-In. In all cases, product-specific disposition dates will be given in the cancellation orders.

Existing stocks are those stocks of registered pesticide products which are currently in the United States and which have been packaged, labeled, and released for shipment prior to the effective date of the cancellation action. Unless the provisions of an earlier order apply, existing stocks already in the hands of dealers or users can be distributed, sold, or used legally until they are exhausted, provided that such further sale and use comply with the EPA-approved label and labeling of the affected product. Exception to these general rules will be made in specific cases when more stringent restrictions on sale, distribution, or use of the products or their ingredients have already been imposed, as in a Special Review action, or where the Agency has identified significant potential risk concerns associated with a particular chemical.

VI. Future Tolerance Revocations

EPA anticipates drafting a future **Federal Register** notice proposing revocation of tolerances on commodities on which there has been no registered uses of ethion. With this present proposal, EPA seeks comment as to whether any individuals or groups want to support continuation of these tolerances.

List of Subjects

Environmental protection, Pesticides and pests.

Dated: September 17, 2001.

Lois A. Rossi,

Director, Special Review and Reregistration Division, Office ofPesticide Programs.

[FR Doc. 01–24060 Filed 9–25–01; 8:45 am]

BILLING CODE 6560–50–S

ENVIRONMENTAL PROTECTION AGENCY

[OPP–66294; FRL–6802–1]

Notice of Receipt of Requests to Voluntarily Cancel Certain Pesticide Registrations

AGENCY: Environmental Protection Agency (EPA).

ACTION: Notice.

SUMMARY: In accordance with section 6(f)(1) of the Federal Insecticide, Fungicide and Rodenticide Act (FIFRA), as amended, EPA is issuing a notice of receipt of requests by registrants to voluntarily cancel certain pesticide registrations.

DATES: Unless a request is withdrawn by, March 25, 2002, unless indicated otherwise, orders will be issued canceling all of these registrations.

FOR FURTHER INFORMATION CONTACT: By mail: James A. Hollins, Office of Pesticide Programs (7502C), Environmental Protection Agency, Ariel Rios Building, 1200 Pennsylvania Avenue, N.W., Washington, DC 20460. Office location for commercial courier delivery, telephone number and e-mail address: Rm. 232, Crystal Mall #2, 1921 Jefferson Davis Highway, Arlington, VA 22202, (703) 305–5761; e-mail address: hollins.james@epa.gov.

SUPPLEMENTARY INFORMATION:

I. General Information

A. Does this Action Apply to Me?

This action is directed to the public in general. Although this action may be of particular interest to persons who produce or use pesticides, the Agency has not attempted to describe all the specific entities that may be affected by this action. If you have any questions regarding the information in this notice, consult the person listed under **FOR FURTHER INFORMATION CONTACT**.

B. How Can I Get Additional Information or Copies of Support Documents?

1. *Electronically.* You may obtain electronic copies of this document, and certain other related documents that might be available electronically, from the EPA Internet Home Page at http://www.epa.gov/. To access this document, on the Home Page select ''Laws and Regulations,'' ''Regulations and Proposed Rules,'' and then look up the entry for this document under the ''**Federal Register** —Environmental Documents.'' You can also go directly to the **Federal Register** listings at http://www.epa.gov/fedrgstr/.

2. *In person.* Contact James A. Hollins at 1921 Jefferson Davis Highway, Crystal Mall #2, Rm. 224, Arlington, VA, telephone number (703) 305–5761. Available from 7:30 a.m. to 4:45 p.m., Monday thru Friday, excluding legal holidays.

II. What Action is the Agency Taking?

This notice announces receipt by the Agency of applications from registrants to cancel some 33 pesticide products registered under section 3 or 24(c) of FIFRA. These registrations are listed in sequence by registration number (or company number and 24(c) number) in the following Table 1.

TABLE 1. — REGISTRATIONS WITH PENDING REQUESTS FOR CANCELLATION

Registration No.	Product Name	Chemical Name
000100 WA–94–0020	Supracide 25WP Insecticide-Miticide	*O,O*-Dimethyl phosphorodithioate, *S*-ester with 4-(mercaptomethyl)-2-
000241–00328	Pursuit/Dual Herbicide	2-Chloro-*N*-(2-ethyl-6-methylphenyl)-*N*-(2-methoxy-1-methylphenyl)acetamide (9CI)
		(+/-)-2-(4,5-Dihydro-4-methyl-4-(1-methylethyl)-5-oxo-1*H*-imadazol-2-
000264–00464	Mocap Plus 4–2 EC Nematicide - Insecticide	*O,O*-Diethyl *S*-(2-(ethylthio)ethyl) phosphorodithioate
		O-Ethyl *S,S*-dipropyl phosphorodithioate
000264–00475	Mocap Pcnb 3–10 Granular Nematicide - Insecticide	*O*-Ethyl *S,S*-dipropyl phosphorodithioate
		Pentachloronitrobenzene
000264–00521	Holdem Brand Granular Nematicide Insecticide	*O*-Ethyl *S,S*-dipropyl phosphorodithioate
		O,O-Diethyl *S*-((ethylthio)methyl) phosphorodithioate
000264–00541	Mocap Gel Nematicide-Insecticide	*O*-Ethyl *S,S*-dipropyl phosphorodithioate
000279 LA–98–0010	Firstline GT Plus Termite Bait Station	1-Octanesulfonamide, *N*-ethyl-1,1,2,2,3,3,4,4,5,5,6,6,7,7,8,8,8-heptadecafluoro-
000279 WA–90–0023	Thiodan 3 E.C.	6,7,8,9,10-Hexachloro-1,5,5a,6,9,9a-hexahydro-6,9-methano-2,4,3-benzodioxathiepin-3-oxide
000499–00460	Pro-Control Roach Bait	1-Octanesulfonamide, *N*-ethyl-1,1,2,2,3,3,4,4,5,5,6,6,7,7,8,8,8-heptadecafluoro-
000572–00224	Rockland Residual Fly Spray D	*O,O*-Dimethyl *S*-((methylcarbamoyl)methyl) phosphorodithioate
000769–00874	Pratt Benomyl 50W Systemic Fungicide	Methyl 1-(butylcarbamoyl)-2-benzimidazolecarbamate
000769–00921	Science Benomyl 50W Systemic Fungicide	Methyl 1-(butylcarbamoyl)-2-benzimidazolecarbamate
000802–00352	Lilly/Miller Granular Noxall Vegetation Killer	Sodium metaborate (NaB_{O2})
		3-(3,4-Dichlorophenyl)-1,1-dimethylurea
		Sodium chlorate
001812–00284	Griffin Fluometuron Technical	1,1-Dimethyl-3-(α,α,α-trifluoro-m-tolyl)urea (Note: α=alpha)
001812–00327	GX–071 Technical	1-Octanesulfonamide, *N*-ethyl-1,1,2,2,3,3,4,4,5,5,6,6,7,7,8,8,8-heptadecafluoro-
004822–00355	Raid Max Roach Bait	1-Octanesulfonamide, *N*-ethyl-1,1,2,2,3,3,4,4,5,5,6,6,7,7,8,8,8-heptadecafluoro-

TABLE 1. — REGISTRATIONS WITH PENDING REQUESTS FOR CANCELLATION—Continued

Registration No.	Product Name	Chemical Name
004822–00457	Sulfotine	Lithium (perfluorooctane)sulfonate
004822–00458	Raid TVK	Lithium (perfluorooctane)sulfonate
008660–00022	Vertagreen Crabgrass Preventer	Dimethyl tetrachloroterephthalate
008660–00033	Vertagreen Professional Use with Dacthal	Dimethyl tetrachloroterephthalate
008660–00035	Concentrated Ronstar for Turf	2-tert-Butyl-4-(2,4-dichloro-5-isopropoxyphenyl-delta2-1,3,4-oxadiazoline-5-one
008660–00062	Garden Weed Preventer (Contains Dacthal)	Dimethyl tetrachloroterephthalate
008660–00098	Turf Pro Dacthal 5G	Dimethyl tetrachloroterephthalate
008660–00100	Turf Pro Dacthal 5G Plus	Dimethyl tetrachloroterephthalate
008660–00189	Holiday Crabgrass Preventer Pre-Emergence	Dimethyl tetrachloroterephthalate
009086–00009	Revenge Bug Strip	2,2-Dichlorovinyl dimethyl phosphate
009086–00011	Roxide DDVP Technical	2,2-Dichlorovinyl dimethyl phosphate
009367–00050	Residual Insecticide	*o*-Isopropoxyphenyl methylcarbamate
051036 ND–98–0006	Chlorpyrifos 4E-Wheat	*O,O*-Diethyl *O*-(3,5,6-trichloro-2-pyridyl) phosphorothioate
062719–00082	Tandem	2-(3,5-Dichlorophenyl)-2-(2,2,2-trichloroethyl)oxirane
062719 FL–92–0010	Lorsban 50W Insecticide In Water Soluble Packets	*O,O*-Diethyl *O*-(3,5,6-trichloro-2-pyridyl) phosphorothioate
063935 FL–91–0003	Ortho Bolero 8EC	*S*-((4-Chlorophenyl)methyl) *N,N*-diethylthiocarbamate
064864–00036	Last-Bite Snail & Slug Killer Pellets	2,4,6,8-Tetramethyl-1,3,5,7-tetroxocane

Unless a request is withdrawn by the registrant within 180 days (unless indicated otherwise) of publication of this notice, orders will be issued canceling all of these registrations. Users of these pesticides or anyone else desiring the retention of a registration should contact the applicable registrant during this comment period. Registrations 009086–00011, Roxide Technical DDVP and 009086–00009, Roxide Revenge Bug Strip are registrations for which the items and conditions for cancellation and disposition of existing stocks were previously agreed to between EPA and Roxide International, Inc., in the May 31, 2001, Consent Agreement and Final Order (Docket No. FIFRA–HQ–2001–0003). Thus, EPA intends to grant Roxide's request for voluntary cancellation of these registrations 30 days after publication of this notice. After the registrations are cancelled EPA will permit Roxide to sell and distribute their products until December 31, 2001.

The following Table 2, includes the names and addresses of record for all registrants of the products in Table 1, in sequence by EPA company number.

TABLE 2. — REGISTRANTS REQUESTING VOLUNTARY CANCELLATION

EPA Company No.	Company Name and Address
000100	Syngenta Crop Protection, Inc., Box 18300, Greensboro, NC 27419.
000241	BASF Corp., Box 400, Princeton, NJ 08543.
000264	Aventis Cropscience USA LP, 2 T.W. Alexander Drive, Box 12014, Research Triangle Park, NC 27709.
000279	FMC Corp., Agricultural Products Group, 1735 Market St, Philadelphia, PA 19103.
000499	Whitmire Micro-Gen Research Laboratories Inc., 3568 Tree Ct Industrial Blvd, St Louis, MO 63122.
000572	Rockland Corp., 686 Passaic Ave., Box 809, West Caldwell, NJ 07007.
000769	The Platinum Group, Agent For: Verdant Brands, Inc., 9855 W. 78th St, Eden Prairie, MN 55344.
000802	Lilly Miller Brands, Agent For: Central Garden & Pet, 16201 SE 98th, Clackamas, OR 97015.
001812	Griffin L.L.C., Box 1847, Valdosta, GA 31603.

TABLE 2. — REGISTRANTS REQUESTING VOLUNTARY CANCELLATION—Continued

EPA Company No.	Company Name and Address
004822	S.C. Johnson & Son Inc., 1525 Howe Street, Racine, WI 53403.
008660	Pursell Industries, Inc., 1500 Urban Center Parkway, Suite 520, Birmingham, AL 35242.
009086	Roxide International Inc., Box 249, New Rochelle, NY 10802.
009367	Theochem Laboratories, Inc., 7373 Rowlett Park Drive, Tampa, FL 33610.
051036	Micro-Flo Co., LLC, Box 772099, Memphis, TN 38117.
062719	Dow Agrosciences LLC, 9330 Zionsville Rd., 308/2E225, Indianapolis, IN 46268.
063935	Third Party Registrations, Inc., Box 140097, Orlando, FL 32814.
064864	Pace International LLC, 1011 Western Ave., Suite 505, Seattle, WA 98104.

EPA has requested a 30–day comment period for registration 008660–00035.

III. What is the Agency's Authority for Taking this Action?

Section 6(f)(1) of FIFRA provides that a registrant of a pesticide product may at any time request that any of its pesticide registrations be amended to delete one or more uses. The Act further provides that, before acting on the request, EPA must publish a notice of receipt of any such request in the **Federal Register**. Thereafter, the Administrator may approve such a request.

IV. Loss of Active Ingredients

Unless the requests for cancellations are withdrawn, two pesticide active ingredients will no longer appear in any registered products. Those who are concerned about the potential loss of these active ingredients for pesticidal use are encouraged to work directly with the registrant(s) to explore the possibility of their withdrawing the request for cancellation. The active ingredients are listed in the following Table 3, with the EPA company and CAS number.

TABLE 3. — ACTIVE INGREDIENT DISAPPEARING AS A RESULT OF REGISTRANTS' REQUEST TO CANCEL

CAS No.	Chemical Name	EPA Company No.
29457–72–5	Lithium (Perfluorooctane sulfonate)	004822
58138–08–2	Dichlorophenyl-2-(2,2,2-trichloroethy-l)oxirane	062719

V. Procedures for Withdrawal of Request

Registrants who choose to withdraw a request for cancellation must submit such withdrawal in writing to James A. Hollins, at the address given above, postmarked before March 25, 2002, unless indicated otherwise. This written withdrawal of the request for cancellation will apply only to the applicable 6(f)(1) request listed in this notice. If the product(s) have been subject to a previous cancellation action, the effective date of cancellation and all other provisions of any earlier cancellation action are controlling. The withdrawal request must also include a commitment to pay any reregistration fees due, and to fulfill any applicable unsatisfied data requirements.

VI. Provisions for Disposition of Existing Stocks

The effective date of cancellation will be the date of the cancellation order. The orders effecting these requested cancellations will generally permit a registrant to sell or distribute existing stocks for 1–year after the date the cancellation request was received by the Agency. This policy is in accordance with the Agency's statement of policy as prescribed in **Federal Register** of June 26, 1991 (56 FR 29362) (FRL–3846–4). Exception to this general rule will be made if a product poses a risk concern, or is in noncompliance with reregistration requirements, or is subject to a data call-in. In all cases, product-specific disposition dates will be given in the cancellation orders.

Existing stocks are those stocks of registered pesticide products which are currently in the United States and which have been packaged, labeled, and released for shipment prior to the effective date of the cancellation action. Unless the provisions of an earlier order apply, existing stocks already in the hands of dealers or users can be distributed, sold or used legally until they are exhausted, provided that such further sale and use comply with the EPA-approved label and labeling of the affected product(s). Exceptions to these general rules will be made in specific cases when more stringent restrictions on sale, distribution, or use of the products or their ingredients have already been imposed, as in Special Review actions, or where the Agency has identified significant potential risk concerns associated with a particular chemical.

List of Subjects

Environmental protection, Agricultural commodities, Pesticides and pests.

Dated: September 10, 2001.

Richard D. Schmitt,

Associate Director, Information Resources and Services Division, Office of Pesticide Programs.

[FR Doc. 01–24058 Filed 9–25–01; 8:45 a.m.]

BILLING CODE 6560–50–S

ENVIRONMENTAL PROTECTION AGENCY

[FRL–OW–7063–7]

Notice of Availability of Draft Aquatic Life Criteria Document for Atrazine

AGENCY: Environmental Protection Agency (EPA).

ACTION: Notice of availability of draft aquatic life criteria document for atrazine.

SUMMARY: Section 304(a)(1) of the Clean Water Act (CWA) requires the Environmental Protection Agency (EPA) to develop and publish, and from time to time revise, criteria for water accurately reflecting the latest scientific knowledge. These criteria provide EPA's recommendations to states and authorized tribes as guidance in establishing their water quality standards as state or tribal law or regulation. Today, EPA is notifying the public about the availability of the draft aquatic life criteria document for atrazine.

EPA is notifying the public about the availability of this draft document in accordance with the Agency's process for developing or revising criteria (63 FR 68354, December 10, 1998). As indicated in the December 10, 1998 FR notice, the Agency believes it is important to provide the public with an opportunity to submit scientific information on draft criteria. EPA is soliciting views from the public on issues of science pertaining to the information used in deriving the draft criteria. EPA is also soliciting input from the public on harmonizing risk assesssment methods used by the Office of Water (OW) in its draft aquatic life criteria document for atrazine and by the Office of Pesticide Programs (OPP) in its Preliminary Ecological Fate and Effects Risk Assessment for Atrazine, published elsewhere in this issue of the **Federal Register**.

DATES: All significant scientific information must be submitted to the Agency under docket number W–01–10. All significant scientific information submissions are requested to be submitted within 60 days after publication of this notice. The Administrative Record supporting this draft guidance document is available at the Water Docket, Room EB 57, Environmental Protection Agency, 401 M Street SW, Washington, DC 20460 on Monday through Friday, excluding Federal holidays, between 9 a.m. and 4 p.m. For access to docket materials call (202) 260–3027 for an appointment. A reasonable fee will be charged for photocopies.

ADDRESSES: Send an original and three copies of any written significant scientific information to W–01–10 Comment Clerk, Water Docket (MC4101), USEPA, 1200 Pennsylvania Ave., NW., Washington, DC 20460. Information may be hand-delivered to the Water Docket, USEPA, Room EB 57,

401 M Street, SW, Washington, D.C. 20460. Information may also be submitted electronically to *OW-Docket@epa.gov.* Information should be submitted as a WP5.1, 6.1 and/or 8.0 or an ASCII file with no form of encryption.

Copies of the criteria document entitled, Ambient Aquatic Life Water Quality Criteria for Atrazine may be obtained from EPA's Water Resource Center by phone at (202) 260–7786, or by e-mail to *center.water-resource@epa.gov* or by conventional mail to EPA Water Resource Center, RC–4100, 1200 Pennsylvania Ave., Washington, DC 20460. Alternatively, consult *www.epa.gov/OST/standards* for download availability.

FOR FURTHER INFORMATION CONTACT:

Frank Gostomski, Health and Ecological Criteria Division (4304), US EPA, 1200 Pennsylvania Avenue NW, Washington, D.C. 20460; (202) 260–1321; *gostomski.frank@epa.gov*

SUPPLEMENTARY INFORMATION:

What Are Recommended Water Quality Criteria?

Recommended water quality criteria are the concentrations of a chemical in water at or below which aquatic life are protected from acute and chronic adverse effects of the chemical. Section 304(a)(1) of the Clean Water Act requires EPA to develop and publish, and from time to time revise, criteria for water accurately reflecting the latest scientific knowledge. Water quality criteria developed under section 304(a) are based solely on data and scientific judgments. They do not consider economic impacts or the technological feasibility of meeting the criteria in ambient water. Section 304(a) criteria provide guidance to States and Tribes in adopting water quality standards and provide a scientific basis for them to develop controls of discharges or releases of pollutants. The criteria also provide a scientific basis for EPA to develop Federally promulgated water quality standards under section 303(c).

What Is Atrazine and Why Are We Concerned About It?

Atrazine is an organic chemical used as an herbicide throughout the U.S. for control of weeds in agricultural crops. Environmental exposure occurs mainly from its application as an herbicide but may also occur from industrial manufacture, distribution releases, precipitation, field runoff, and drift. Atrazine is moderately volatile and soluble in water, and resistant to natural degradation in water. Because of atrazine's chemical properties and widespread use as an herbicide, concerns have been raised over the potential risks posed by exposure of aquatic organisms to it. For these reasons, EPA has developed the following water quality criteria:

Freshwater

Aquatic life should not be affected unacceptably if the:

One-hour average concentration of atrazine does not exceed 350 ug/l more than once every three years on the average (Acute Criterion); and

Four-day average concentration of atrazine does not exceed 12 ug/l more than once every three years on the average (Chronic Criterion).

Saltwater

Aquatic life should not be affected unacceptably if the:

One hour average concentration of atrazine does not exceed 760 ug/l more than once every three years on the average (Acute Criterion); and

Four-day average concentration of atrazine does not exceed 26 ug/l more than once every three years on the average (Chronic Criterion).

Definitions of Criteria Terminology

One hour average: the average of all samples taken during a one hour period by either continuous sampling or periodic grab samples.

Four day average: the average of all samples taken during four consecutive days by either continuous sampling or periodic grab samples. Also known as a 96-hour average.

Acute Criterion: A chemical concentration protective of aquatic organisms from short term exposure to fast acting chemicals or spikes in concentrations. For example exposure of a fish moving through an area for foraging but not residing in the area.

Chronic Criterion: A chemical concentration protective of aquatic organisms from longer term exposure to slower acting chemicals or relatively steady concentrations. For example, exposure of a fish that resides in an area.

How Has EPA Coordinated Development of Ecological Risk Assessments on Atrazine Between the Office of Water (OW) and the Office of Pesticide Programs (OPP)?

Concurrent with OW's release of the Draft Aquatic Life Criteria Document for Atrazine, OPP is releasing its Preliminary Ecological Fate and Effects Risk Assessment for Atrazine. Both offices shared their aquatic toxicity data bases for atrazine in the development of their risk assessment documents. OW and OPP are currently consulting on their respective ecological risk assessment methodologies. Although there are similarities in the approaches, differences remain. When the consultation is completed, there may be revisions to this assessment. While the consultation is underway, both offices are making their respective ecological risk assessments for atrazine available to the public and requesting comment on their respective methodologies. It would be helpful if comments regarding a methodology that are made to one office are also made available to the other. OW and OPP will share comments received on their respective risk assessment methodologies and will coordinate review of those comments.

Why Is EPA Notifying the Public About the Draft Atrazine Criteria Document?

Today, EPA is notifying the public about the availability of the draft aquatic life criteria document for atrazine to expand the public's involvement in the criteria development process. EPA notified the public of its intent to develop aquatic life criteria for atrazine in the **Federal Register** on October 29, 1999 (64 FR 58409). At that time EPA made available to the public all references identified by a recent literature review and solicited any additional pertinent data or scientific views that would be useful in developing the aquatic life criteria for atrazine. EPA is now making the draft aquatic life criteria document for atrazine available for public review.

As indicated in the December 10, 1998 FR notice, the Agency believes it is important to provide the public with an opportunity to submit scientific information on draft criteria. EPA is soliciting views from the public on issues of science pertaining to the information used to derive the draft criteria. EPA will review and consider significant scientific information submitted by the public that might not have otherwise been identified during development of these criteria.

Where Can I Find More Information on EPA's Revised Process for Developing New or Revised Criteria?

The Agency published detailed information about its revised process for developing and revising criteria in the **Federal Register** on December 10, 1998 (63 FR 68354) and in the EPA document entitled, National Recommended Water Quality—Correction (EPA 822–Z–99–001, April 1999). The purpose of the revised process is to provide expanded opportunities for public input, and to make the criteria development process more efficient.

Dated: August 8, 2001.

Geoffrey H. Grubbs,

Director, Office of Science and Technology.

[FR Doc. 01–23753 Filed 9–25–01; 8:45 am]

BILLING CODE 6560–50–P

FARM CREDIT ADMINISTRATION

Farm Credit Administration Board; Special Meeting

AGENCY: Farm Credit Administration.

SUMMARY: Notice is hereby given, pursuant to the Government in the Sunshine Act (5 U.S.C. 552b(e)(3)), of the forthcoming special meeting of the Farm Credit Administration Board (Board).

DATE AND TIME: The special meeting of the Board will be held at the offices of the Farm Credit Administration in McLean, Virginia, on September 27, 2001, from 9 a.m. until such time as the Board concludes its business.

FOR FURTHER INFORMATION CONTACT: Kelly Mikel Williams, Secretary to the Farm Credit Administration Board, (703) 883–4025, TDD (703) 883–4444.

ADDRESS: Farm Credit Administration, 1501 Farm Credit Drive, McLean, Virginia 22102–5090.

SUPPLEMENTARY INFORMATION: This meeting of the Board will be open to the public (limited space available). In order to increase the accessibility to Board meetings, persons requiring assistance should make arrangements in advance. The matters to be considered at the meeting are:

Open Session

New Business—Other

—FY 2002 Revised Budget and FY 2003 Proposed Budget

Dated: September 24, 2001.

Kelly Mikel Williams,

Secretary, Farm Credit Administration Board.

[FR Doc. 01–24259 Filed 9–24–01; 2:55 pm]

BILLING CODE 6705–01–P

FEDERAL COMMUNICATIONS COMMISSION

[CC Docket No. 01–138; FCC 01–269]

Application by Verizon Pennsylvania Inc., Verizon Long Distance, Verizon Enterprise Solutions, Verizon Global Networks Inc., and Verizon Select Services Inc., Pursuant to Section 271 of the Telecommunications Act of 1996, for Authorization To Provide In-Region, InterLATA Services in Pennsylvania

AGENCY: Federal Communications Commission.

ACTION: Notice.

SUMMARY: In this document the Federal Communications Commission grants the section 271 application of Verizon Pennsylvania Inc., *et al.* (Verizon) for authority to enter the interLATA telecommunications market in the state of Pennsylvania. The Commission grants Verizon's application based on our conclusion that Verizon has satisfied all of the statutory requirements for entry, and opened its local exchange markets to full competition.

DATES: Effective date September 26, 2001.

FOR FURTHER INFORMATION CONTACT: Robert Tanner, Attorney-Advisor, Policy and Program Planning Division, Common Carrier Bureau, (202) 418–1580.

SUPPLEMENTARY INFORMATION: This is a summary of the Commission's *Memorandum Opinion and Order* in CC Docket No. 01–138, FCC 01–269, released September 19, 2001. The complete text of this document is available for inspection and copying during normal business hours in the FCC Reference Information Center, Courtyard Level, 445 12th Street, SW., Washington, DC, and also may be purchased from the Commission's duplicating contractor, Qualex International, Portals II, 445 12th Street, SW., Room CY–B402, Washington, DC 20554. It is also available on the Commission's website at *http://www.fcc.gov/ccb/ppp/2001ord.html*.

Synopsis of the Order

1. On June 21, 2001, Verizon filed an application, pursuant to section 271 of the Communications Act of 1934, as amended, for authority to provide in-region, interLATA service in the state of Pennsylvania.

2. *The State Commission's Evaluation.* The Pennsylvania Public Utilities Commission (Pennsylvania Commission) advised the Commission, following months of extensive review, that Verizon met the checklist requirements of section 271(c) and has taken the statutorily required steps to open its local markets to competition. Consequently, the Pennsylvania Commission recommended that the Commission approve Verizon's in-region, interLATA entry in its June 25, 2001 evaluation of the application.

3. *The Department of Justice's Evaluation.* The Department of Justice does not oppose Verizon's section 271 application for Pennsylvania, but states that it is unable fully to endorse it due to concerns about Verizon's wholesale billing systems. The Department of Justice also states, however, that local markets in Pennsylvania show a substantial amount of competitive entry, and does not foreclose the possibility that the Commission may be able to approve Verizon's application.

Primary Issues in Dispute

4. *Checklist Item 2—Unbundled Network Elements.* Based on the record, the Commission finds that Verizon has provided ''[n]ondiscriminatory access to network elements in accordance with the requirements of sections 251(c)(3) and 252(d)(1)'' of the Act in compliance with checklist item 2. The Commission addresses herein those aspects of this checklist item that raised significant issues concerning whether Verizon's performance demonstrated compliance with the Act: (1) Operations Support Systems (OSS), particularly billing; (2) UNE pricing; and (3) provisioning of UNE combinations.

5. *Access to Operations Support Systems (OSS).* The Commission concludes that Verizon provides nondiscriminatory access to its OSS. Our decision focuses only on issues of controversy, particularly Verizon's wholesale billing functions. The Commission finds that, despite some historical problems in producing a readable, auditable and accurate wholesale bill, Verizon provides a wholesale bill that gives competitive LECs a meaningful opportunity to compete. Verizon demonstrates that recent data show significantly improved performance in delivering timely and accurate bills. Similarly, performance data indicate that any delay associated with BOS BDT bills was temporary, associated with on-going improvements to the billing process and not indicative of a larger, systemic problem with delivering timely bills. In addition, the Commission finds that third-party studies of Verizon's billing systems, processes and performance support Verizon's recent commercial data both for retail-formatted bills and BOS BDT

formatted bills. The Commission therefore ultimately finds that Verizon's billing performance is minimally sufficient to demonstrate checklist compliance, especially in light of the showing Verizon has made for providing timely and accurate service usage information to competitive LECs.

6. *Checklist Item 4—Unbundled Local Loops.* Verizon has adequately demonstrated that it provides unbundled local loops in accordance with the requirements of section 271 and our rules. This conclusion is based on review of Verizon's performance for all loop types, which include, as in past section 271 orders, voice grade loops, hot cuts, xDSL-capable loops, digital loops, and high capacity loops, and our review of Verizon's processes for line sharing and line splitting. Upon review, the Commission finds that Verizon provides nondiscriminatory access to all loop types. It also finds that Verizon has demonstrated that it adequately provisions line-sharing and line-splitting. Furthermore, the Commission finds that Verizon provides access to loop makeup information in compliance with our rules.

7. *Checklist Item 14—Resale.* Section 271(c)(2)(B)(xiv) of the Act requires that a BOC make ''telecommunications services * * * available for resale in accordance with the requirements of section 251(c)(4) and section 252 (d)(3).'' Based on the record in this proceeding, the Commission concludes that Verizon satisfies the requirements of this checklist item in Pennsylvania. Verizon has a concrete and specific legal obligation in its interconnection agreements and tariffs to make its retail services available for resale to competing carriers at wholesale rates. Also, Verizon demonstrates current compliance with the checklist requirements with regard to DSL resale.

Other Checklist Items

8. *Checklist Item 1—Interconnection.* Section 271(c)(2)(B)(i) requires the BOC to provide equal-in-quality interconnection on terms and conditions that are just, reasonable and nondiscriminatory in accordance with the requirements of sections 251 and 252. Based on evidence in the record, the Commission concludes that Verizon demonstrates that it is in compliance with the requirements of this checklist item. The Commission also notes that the Pennsylvania Commission found that Verizon satisfied this checklist item and that no commenters raised any issues concerning Verizon's performance for the provisioning of interconnection.

9. *Pricing.* The Commission's pricing rules require, among other things, that in order to comply with its collocation obligations, an incumbent LEC provide collocation based on TELRIC. Based on the record, the Commission finds that Verizon offers interconnection in Pennsylvania to other telecommunications carriers at just, reasonable and nondiscriminatory rates and is therefore in compliance with checklist item

10. *Checklist Item 8—White Pages Directory Listings.* Section 271(c)(2)(B)(viii) of the competitive checklist requires a BOC to provide ''[w]hite page directory listings for customers of the other carrier's telephone exchange service.'' Based on the evidence in the record, we conclude that Verizon satisfies the requirements of checklist item 8.

11. *Checklist Item 13—Reciprocal Compensation.* Section 271(c)(2)(B)(xiii) of the Act requires that a BOC enter into ''[r]eciprocal compensation arrangements in accordance with the requirements of section 252(d)(2).'' In turn, section 252(d)(2)(A) specifies when a state commission may consider the terms and conditions for reciprocal compensation to be just and reasonable. Based on the record, we conclude that Verizon demonstrates that it provides reciprocal compensation as required by checklist item 13.

12. *Remaining Checklist Items (3, 6, 7, and 9–12).* An applicant under section 271 must demonstrate that it complies with checklist item 3 (access to poles, ducts, and conduits), item 6 (unbundled local switching), item 7 (911/E911 access and directory assistance/operator services), item 9 (numbering administration), item 10 (databases and associated signaling), item 11 (number portability), and item 12 (local dialing parity). Based on the evidence in the record, the Commission concludes that Verizon demonstrates that it is in compliance with checklist items 3, 6, 7, 9, 10, 11, and 12 in Pennsylvania. The Commission also notes that the Pennsylvania Commission concluded that Verizon complies with the requirements of each of these checklist items.

13. *Compliance with Section 271(c)(1)(A).* In order for the Commission to approve a BOC's application to provide in-region, interLATA services, a BOC must first demonstrate that it satisfies the requirements of either section 271(c)(1)(A) (Track A) or section 271(c)(1)(B) (Track B). To qualify for Track A, a BOC must have interconnection agreements with one or more competing providers of ''telephone exchange service * * * to residential and business subscribers.'' We conclude, as the Pennsylvania Commission did, that Verizon demonstrates that it satisfies the requirements of Track A based on the interconnection agreements it has implemented with competing carriers in Pennsylvania.

14. *Section 272 Compliance.* Based on the record, the Commission concludes that Verizon has demonstrated that it will comply with the requirements of section 272. Significantly, Verizon provides evidence that it maintains the same structural separation and nondiscrimination safeguards in Pennsylvania, as it does in Connecticut, New York and Massachusetts, states in which Verizon has already received section 271 authority.

15. *Public Interest Analysis.* The Commission concludes that approval of this application is consistent with the public interest. From extensive review of the competitive checklist, which embodies the critical elements of market entry under the Act, we find that barriers to competitive entry in the local exchange markets have been removed and the local exchange markets today are open to competition. The Commission further finds that the record confirms our view, as noted in prior section 271 orders, that BOC entry into the long distance market will benefit consumers and competition if the relevant local exchange market is open to competition consistent with the competitive checklist. The Commission also finds that the existing performance assurance plan (''PAP'') currently in place for Pennsylvania, in combination with other factors, provides assurance that the local market will remain open after Verizon receives section 271 authorization.

16. *Section 271(d)(6) Enforcement Authority.* The Commission has a responsibility not only to ensure that Verizon is in compliance with section 271 today, but also that it remains in compliance in the future. Working with the Pennsylvania Commission, the Commission intends to monitor closely post-entry compliance and to enforce the provisions of section 271 using the various enforcement tools Congress provided us in the Communications Act.

Federal Communications Commission.

Magalie Roman Salas,

Secretary.

[FR Doc. 01–24042 Filed 9–25–01; 8:45 am]

BILLING CODE 6712–01–P

FEDERAL MARITIME COMMISSION

Notice of Agreement(s) Filed

The Commission hereby gives notice of the filing of the following agreement(s) under the Shipping Act of 1984. Interested parties can review or obtain copies of agreements at the Washington, DC offices of the Commission, 800 North Capitol Street, NW., Room 940. Interested parties may submit comments on an agreement to the Secretary, Federal Maritime Commission, Washington, DC 20573, within 10 days of the date this notice appears in the **Federal Register**.

Agreement No.: 010776–120

Title: Asia North America Eastbound Rate Agreement.

Parties:

A.P. Moller-Maersk Sealand

Hapag-Lloyd Container Linie GmbH

American President Lines, Ltd.

Mitsui O.S.K. Lines, Ltd.

Orient Overseas Container Line Limited

P&O Nedlloyd Limited

Kawasaki Kisen Kaisha, Ltd.

Nippon Yusen Kaisha

P&O Nedlloyd B.V.

APL Co. Pte Ltd.

Synopsis: The proposed agreement modification extends the current suspension of the conference for an additional six months, through May 1, 2002.

Agreement No.: 011745–002.

Title: Evergreen Lloyd Triestino Alliance Agreement.

Parties:

Evergreen Marine Corporation

Lloyd Triestino Di Navigazione S.P.A.

Synopsis: The proposed modification would allow the parties to charter space from each other on all vessels owned or controlled by the parties or on affiliates or subsidiaries of the parties when the party in question has been allocated space on its affiliate, the charter to be charged against that allocation. It also modifies the vessel commitment of each party to the arrangement. Expedited review has been requested.

Dated: September 21, 2001.

By Order of the Federal Maritime Commission.

Bryant L. VanBrakle,

Secretary.

[FR Doc. 01–24105 Filed 9–25–01; 8:45 am]

BILLING CODE 6730–01–P

FEDERAL MARITIME COMMISSION

Ocean Transportation Intermediary License; Applicant

Notice is hereby given that the following applicant has filed with the Federal Maritime Commission an application for license as Non-Vessel Operating Common Carrier and Ocean Freight Forwarder—Ocean Transportation Intermediary pursuant to section 19 of the Shipping Act of 1984 as amended (46 U.S.C. app. 1718 and 46 CFR 515).

Persons knowing of any reason why the following applicant should not receive a license are requested to contact the Office of Transportation Intermediaries, Federal Maritime Commission, Washington, DC 20573.

Non-Vessel-Operating Common Carrier Ocean Transportation Intermediary Applicant: Al G. Wichterich dba Worldwide Express, 9327 Tranquil Park Dr., Spring, TX 77379, Officers: Albert G. Wichterich, Jr., President, (Qualifying Individual), Kathleen D. Wichterich, Secretary.

Dated: September 21, 2001.

Bryant L. VanBrakle,

Secretary.

[FR Doc. 01–24107 Filed 9–25–01; 8:45 am]

BILLING CODE 6730–01–P

FEDERAL RETIREMENT THRIFT INVESTMENT BOARD

Sunshine Act Notice

TIME AND DATE: 10 a.m. (EDT), October 9, 2001.

PLACE: 4th Floor, Conference Room 4506, 1250 H Street, NW., Washington, DC.

STATUS: Open.

MATTERS TO BE CONSIDERED:

1. Approval of the minutes of the September 10, 2001, Board member meeting.
2. Thrift Savings plan activity report by the Executive Director.
3. Review of KPMG LLP audit reports:

(a) Backup, Recovery, and Contingency Planning of the Thrift Savings Plan at the U.S. Department of Agriculture, National Finance Center.

(b) Computer Access Controls and Security of the Thrift Savings Plan at the U.S. Department of Agriculture, National Finance Center.

(c) Systems Infrastructure Controls of the Thrift Savings Plan at the U.S. Department of Agriculture, National Finance Center.

Contact Person for More Information: Thomas J. Trabucco, Director, Office of External Affairs, (202) 942–1640.

Dated: September 24, 2001.

Elizabeth S. Woodruff,

Secretary to the Board, Federal Retirement Thrift Investment Board.

[FR Doc. 01–24252 Filed 9–24–01; 2:47 pm]

BILLING CODE 6760–01–M

DEPARTMENT OF HEALTH AND HUMAN SERVICES

Centers for Disease Control and Prevention

[60Day–01–62]

Proposed Data Collections Submitted for Public Comment and Recommendations

In compliance with the requirement of Section 3506(c)(2)(A) of the Paperwork Reduction Act of 1995 for opportunity for public comment on proposed data collection projects, the Centers for Disease Control and Prevention (CDC) will publish periodic summaries of proposed projects. To request more information on the proposed projects or to obtain a copy of the data collection plans and instruments, call the CDC Reports Clearance Officer on (404) 639–7090.

Comments are invited on: (a) Whether the proposed collection of information is necessary for the proper performance of the functions of the agency, including whether the information shall have practical utility; (b) the accuracy of the agency's estimate of the burden of the proposed collection of information; (c) ways to enhance the quality, utility, and clarity of the information to be collected; and (d) ways to minimize the burden of the collection of information on respondents, including through the use of automated collection techniques or other forms of information technology. Send comments to Anne O'Connor, CDC Assistant Reports Clearance Officer, 1600 Clifton Road, MS–D24, Atlanta, GA 30333. Written comments should be received within 60 days of this notice.

Proposed Project: HIV Prevention Capacity-Building Assistance Information Collection—Reporting Forms—To be used from 2001 to 2005—New—National Center for HIV, STD, and TB Prevention (NCHSTP), Centers for Disease Control and Prevention (CDC). The purpose of this request is to obtain OMB clearance to collect information to monitor the capacity-building activities and training of capacity-building assistance (CBA) providers funded by the Centers for Disease Control and Prevention NCHSTP to support community-based

organizations (CBOs) to deliver HIV prevention services.

In FY 1999, the Department of Health and Human Services announced a special initiative to reduce the disproportionate impact of HIV/AIDS on African Americans and other communities of color. The CDC announced the availability of funds for cooperative agreements for HIV prevention CBA to develop and implement regionally structured, integrated capacity-building systems. Thirty CBA provider organizations were funded to implement this strategy. These grantees provide HIV prevention CBA services to CBOs serving racial/ethnic minority populations at risk for HIV. The CBA program has expanded from $9 million to approximately $25 million in FY 2001.

CDC is responsible for monitoring and evaluating HIV prevention activities conducted under the CBA cooperative agreements. Enhancing and assuring quality programming requires that CDC have current information regarding the progress of CBA activities and services supported through the cooperative agreements. Therefore, forms such as the CBA Notification Form, CBA Completion Form, and CBA Progress Report are considered critical components of the monitoring and evaluation process. Because this program encompasses 30 CBA provider organizations, there is a need for a standardized system for reporting individual instances of CBA delivered by all CBA provider grantees.

As a steward of government funds, CDC needs information to monitor CBA and accurately document CBA activities that occur among CBA provider grantees. The information collected from the CBA Notification and CBA Completion forms, and CBA Progress Report will allow CDC to further identify problems and address technical assistance needs of CBOs in a timely fashion and subsequently improve the effectiveness of CBA program activities and progress toward national goals of HIV prevention. The forms would also assist CDC, in the aggregate, by discerning and refining national goals and objectives in the prevention of HIV. This information collection process will be a potentially valuable management tool for grantees to routinely examine CBA program performance by assessing strengths and weaknesses with the CBA program and national objectives.

To effectively track and monitor all requests for CBA assistance, CBA providers will be required to complete three reporting forms. The first is the CBA Notification Form (form A) that will require CBA providers to submit after each contact with a non-CDC funded CBO or HIV prevention stakeholder for CBA services. The purpose of this form is to track all requests for services from non-CDC funded CBOs and stakeholders. CBA requests from these CBOs and stakeholders are received by CBA providers on an on-going basis. CBA providers will be required to submit a CBA Completion Form (form B) following each episode of CBA service delivered to all CBOs and stakeholders. The purpose of this form is to provide feedback and follow-up information to CDC Project Officers on the types and quality of CBA services delivered to all CBOs by CBA providers. CBA Requests from these CBOs are received by CBA providers on an on-going basis. Information collection will be on-going throughout the duration of the cooperative agreements. CBA providers will be required to submit a third form, CBA Progress Reports (form C) on a quarterly basis to CDC. The purpose of this report is to describe the HIV prevention activities conducted during the last quarter. The CBA Progress Report will include information on the program successes and barriers, collaborative and cooperative activities with other organizations, and plans for future activities.

It is estimated that Form A (CBA Notification Form) will require 15 minutes of preparation by the respondent, Form B (CBA Completion Form) will require 30 minutes of preparation by the respondent, and Form C (CBA Progress Report) will require 2 hours of preparation by the respondent. In aggregate, report preparation requires approximately 990 burden hours by each respondent. There are no costs to respondents.

Respondents	Number of respondents	Number of responses/respondents	Average burden/response (in hours)	Response burden in hours
Form A: CBA Notification	30	50	15/60	375
Form B: CBA Completion	30	25	30/60	375
Form C: CBA Progress Report	30	4	2	240
Total				990

Dated: September 17, 2001.

Nancy E. Cheal,

Acting Associate Director for Policy, Planning and Evaluation, Centers for Disease Control and Prevention.

[FR Doc. 01–24021 Filed 9–25–01; 8:45 am]

BILLING CODE 4163–18–P

DEPARTMENT OF HEALTH AND HUMAN SERVICES

Centers for Disease Control and Prevention

[60Day–01–63]

Proposed Data Collections Submitted for Public Comment and Recommendations

In compliance with the requirement of Section 3506(c)(2)(A) of the Paperwork Reduction Act of 1995 for opportunity for public comment on proposed data collection projects, the Centers for Disease Control and Prevention (CDC) will publish periodic summaries of proposed projects. To request more information on the proposed projects or to obtain a copy of the data collection plans and instruments, call the CDC Reports Clearance Officer on (404) 639–7090.

Comments are invited on: (a) Whether the proposed collection of information is necessary for the proper performance of the functions of the agency, including whether the information shall have practical utility; (b) the accuracy of the agency's estimate of the burden of the proposed collection of information; (c) ways to enhance the quality, utility, and clarity of the information to be collected; and (d) ways to minimize the burden of the collection of information on respondents, including through the

use of automated collection techniques or other forms of information technology. Send comments to Seleda Perryman, CDC Assistant Reports Clearance Officer, 1600 Clifton Road, MS–D24, Atlanta, GA 30333. Written comments should be received within 60 days of this notice.

Proposed Project: Statement in Support of Application For Waiver of Inadmissibility OMB No. 0920–0006—Extension—National Center for Infectious Diseases (NCID), Centers for Disease Control and Prevention (CDC).

Section 212(a)(1) of the Immigration and Nationality Act states that aliens with specific health-related conditions are ineligible to receive visas and ineligible for admission into the United States. The Attorney General may waive application of this inadmissibility on health-related grounds if an application for waiver is filed and approved by the consular office considering the application for a visa. The Division of Migration and Quarantine, NCID uses this application primarily to collect information to establish and maintain records of waiver applicants in order to notify the Immigration and Naturalization Service when terms, conditions and controls imposed by waiver are not met. NCID is requesting the extension of this data for 3 years. There are no costs to respondents.

Respondents	Number of respondents	Number of responses/respondents	Avg. burden/response (in hrs.)	Total burden (in hrs.)
Businesses or organizations	200	1	10/60	33
Total				33

Dated: September 18, 2001.

Nancy E. Cheal,

Acting Associate Director for Policy, Planning and Evaluation, Centers for Disease Control and Prevention.

[FR Doc. 01–24022 Filed 9–25–01; 8:45 am]

BILLING CODE 4163–18–P

DEPARTMENT OF HEALTH AND HUMAN SERVICES

Centers for Disease Control and Prevention

[30DAY–49–01]

Agency Forms Undergoing Paperwork Reduction Act Review

The Centers for Disease Control and Prevention (CDC) publishes a list of information collection requests under review by the Office of Management and Budget (OMB) in compliance with the Paperwork Reduction Act (44 U.S.C. Chapter 35). To request a copy of these requests, call the CDC Reports Clearance Officer at (404) 639–7090. Send written comments to CDC, Desk Officer, Human Resources and Housing Branch, New Executive Office Building, Room 10235, Washington, DC 20503. Written comments should be received within 30 days of this notice.

Proposed Project: Hazardous Substances Emergency Events Surveillance—Extension—OMB No. 0923–0008 Agency for Toxic Substances and Disease Registry (ATSDR). ATSDR is mandated pursuant to the 1980 Comprehensive Environmental Response Compensation and Liability Act (CERCLA) and its 1986 Amendments, The Superfund Amendments and Reauthorization Act (SARA), to prevent or mitigate adverse human health effects and diminished quality of life resulting from the exposure to hazardous substances into the environment. The primary purpose of this activity, which ATSDR has supported since 1992, is to develop, implement, and maintain a state-based surveillance system for hazardous substances emergency events which can be used to (1) describe the distribution of the hazardous substances releases; (2) describe the public health consequences (morbidity, mortality, and evacuations) associated with the events; (3) identify risk factors associated with the public health consequences; and (4) develop strategies to reduce future public health consequences. The study population will consist of all hazardous substance non-permitted acute releases within the 16 states (Alabama, Colorado, Iowa, Louisiana, Minnesota, Mississippi, Missouri, New Jersey, New York, North Carolina, Oregon, Rhode Island, Texas, Utah, Washington, and Wisconsin) participating in the surveillance system.

Until this system was developed and implemented, there was no national public health-based surveillance system to coordinate the collation, analysis, and distribution of hazardous substances emergency release data to public health practitioners. It was necessary to establish this national surveillance system which describes the public health impact of hazardous substances emergencies on the health of the population of the United States. The data collection form will be completed by the state health department Hazardous Substances Emergency Events Surveillance (HSEES) coordinator using a variety of sources including written and oral reports from environmental protection agencies, police, firefighters, emergency response personnel; or researched by the HSEES coordinator using census data, material safety data sheets, and chemical handbooks. The total estimated annualized burden is 7,356 hours.

Respondents	Number of respondents	Number of responses/respondents	Avg. burden/response (in hrs.)
State Health Deparatments	16	613	45/60

Dated: September 17, 2001.

Nancy E. Cheal,

Acting Associate Director for Policy, Planning and Evaluation, Centers for Disease Control and Prevention.

[FR Doc. 01–24019 Filed 9–25–01; 8:45 am]

BILLING CODE 4163–18–P

DEPARTMENT OF HEALTH AND HUMAN SERVICES

Centers for Disease Control and Prevention

[30Day–48–01]

Agency Forms Undergoing Paperwork Reduction Act Review

The Centers for Disease Control and Prevention (CDC) publishes a list of information collection requests under review by the Office of Management and Budget (OMB) in compliance with the Paperwork Reduction Act (44 U.S.C. Chapter 35). To request a copy of these requests, call the CDC Reports Clearance Officer at (404) 639–7090. Send written comments to CDC, Desk Officer, Human Resources and Housing Branch, New Executive Office Building, Room 10235, Washington, DC 20503. Written comments should be received within 30 days of this notice.

Proposed Project

The National Death Index (NDI)—Extension—OMB No. 0920–213 National Center for Health Statistics (NCHS), Centers for Disease Control and Prevention (CDC). The National Death Index (NDI) is a service of the National Center for Health Statistics that assists health and medical researchers determine the vital status of their study subjects. The NDI is a national data base containing identifying death record information submitted annually to NCHS by all the state vital statistics offices, beginning with deaths in 1979. Searches against the NDI file provide the states and dates of death and the death certificate numbers of deceased study subjects. With the recent implementation of the NDI Plus service, researchers now have the option of also receiving cause of death information for deceased subjects, thus reducing the need to request copies of death certificates from the states. The NDI Plus option currently provides the ICD codes for the underlying and multiple causes of death for the years 1979–1999. The five administrative forms are completed by health researchers in government, universities, and private industry in order to apply for NDI services and to submit records of study subjects for computer matching against the NDI file. The total burdens for this data collection is 227 hours.

Form	Number of respondents	Number of responses/respondents	Avg. burden/response (in hrs.)
Form A	50	1	2 30/60
Form B	70	1	18/60
Form C	120	1	18/60
Form D	10	50	3/60
Form E	40	1	30/60

Dated: September 17, 2001.

Nancy E. Cheal,

Acting Associate Director for Policy, Planning, and Evaluation Centers for Disease Control and Prevention (CDC).

[FR Doc. 01–24020 Filed 9–25–01; 8:45 am]

BILLING CODE 4163–18–P

DEPARTMENT OF HEALTH AND HUMAN SERVICES

Food and Drug Administration

[Docket No. 01P–0245]

Determination That Disulfiram Tablets, 250 and 500 Milligrams, Were Not Withdrawn From Sale for Reasons of Safety or Effectiveness

AGENCY: Food and Drug Administration, HHS.

ACTION: Notice.

SUMMARY: The Food and Drug Administration (FDA) has determined that disulfiram (Antabuse) 250- and 500-milligram (mg) tablets, formerly marketed by Wyeth Ayerst Pharmaceuticals (Wyeth Ayerst), were not withdrawn from sale for reasons of safety or effectiveness. This determination means that FDA will not begin procedures to withdraw approval of abbreviated new drug applications (ANDAs) for disulfiram drug products, and it will allow FDA to continue to approve ANDAs for disulfiram 250- and 500-mg tablets.

FOR FURTHER INFORMATION CONTACT: Mary E. Catchings, Center for Drug Evaluation and Research (HFD–7), Food and Drug Administration, 5600 Fishers Lane, Rockville, MD 20855, 301–594–2041.

SUPPLEMENTARY INFORMATION: In 1984, Congress enacted the Drug Price Competition and Patent Term Restoration Act of 1984 (the 1984 amendments) (Public Law 98–417), which authorized the approval of duplicate versions of drug products approved under an ANDA procedure. ANDA sponsors must, with certain exceptions, show that the drug for which they are seeking approval contains the same active ingredient in the same strength and dosage form as the ''listed drug,'' which is a drug selected by the agency as the reference standard for bioequivalence testing. Sponsors of ANDAs do not have to repeat the extensive clinical testing otherwise necessary to gain approval of a new drug application (NDA). The only clinical data required in an ANDA are data to show that the drug that is the subject of the ANDA is bioequivalent to the listed drug to which the ANDA refers.

The 1984 amendments include what is now section 505(j)(7) of the Federal Food, Drug, and Cosmetic Act (21 U.S.C. 355(j)(7)), which requires FDA to publish a list of all approved drugs. FDA publishes this list as part of the ''Approved Drug Products With Therapeutic Equivalence Evaluations,'' generally known as the ''Orange Book.'' Under FDA regulations, drugs are withdrawn from the list if the agency withdraws or suspends approval of the drug's NDA or ANDA for reasons of safety or effectiveness, or if FDA determines that the listed drug was withdrawn from sale for reasons of safety or effectiveness (21 CFR 314.162).

Under § 314.161(a)(2) (21 CFR 314.161(a)(2)), the agency must make a determination as to whether a listed drug was withdrawn from sale for reasons of safety or effectiveness if ANDAs that refer to the drug that was withdrawn are approved. Section 314.161(d) provides that if FDA determines that the listed drug was removed from sale for safety or effectiveness reasons, the agency will

begin proceedings to withdraw approval of the ANDAs that refer to the drug that was withdrawn from sale.

On May 4, 2001, Sidmak Laboratories, Inc. (Sidmak), submitted a citizen petition (Docket No. 01P–0245/CP1) under 21 CFR 10.25(a) and 10.30 to FDA. Sidmak requested that the agency determine whether disulfiram tablets were withdrawn from the market for reasons other than safety or effectiveness. Disulfiram 250- and 500-mg tablets are the subject of approved NDA 7–883, formerly held by Wyeth Ayerst under the tradename Antabuse. In its petition, Sidmak stated that it acquired all rights to NDA 7–883 from Wyeth Ayerst in December 2000 and that ''concurrent with negotiations for this sale, Wyeth Ayerst discontinued the marketing of its disulfiram product.''

FDA has reviewed its records and, under § 314.161, has determined that disulfiram 250- and 500-mg tablets approved under NDA 7–883 were not withdrawn from sale for reasons of safety or effectiveness. Accordingly, the agency will maintain the listing for these products in the ''Discontinued Drug Product List'' section of the Orange Book. The ''Discontinued Drug Product List'' identifies, among other items, drug products that have been discontinued from marketing for reasons other than safety or effectiveness. The approval status of the approved ANDAs that refer to disulfiram 250- and 500-mg tablets is unaffected. Additional ANDAs for dilsulfiram 250- and 500-mg tablets may also be approved by the agency.

Dated: September 18, 2001.

Margaret M. Dotzel,

Associate Commissioner for Policy.

[FR Doc. 01–24039 Filed 9–25–01; 8:45 am]

BILLING CODE 4160–01–S

DEPARTMENT OF HEALTH AND HUMAN SERVICES

National Institutes of Health

Submission for OMB Review; Comment Request; Agricultural Health Study–A Prospective Cohort Study of Cancer and Other Diseases Among Men and Women in Agriculture

SUMMARY: Under the provisions of Section 3507(a)(1)(D) of the Paperwork Reduction Act of 1995, the National Cancer Institute (NCI), the National Institutes of Health (NIH) has submitted to the Office of Management and Budget (OMB) a request for review and approval of the information collection listed below. This proposed information collection was previously published in the **Federal Register** on June 12, 2001, page 31679 and allowed 60 days for public comment. No public comments were received. The purpose of this notice is allow an additional 30 days for public comment. The National Institutes of Health may not conduct or sponsor, and the respondent is not required to respond to, an information collection that has been extended, revised, or implemented on or after October 1, 1995, unless it displays a currently valid OMB control number.

PROPOSED COLLECTION: *Title:* Agricultural Health Study—A Prospective Cohort Study of Cancer and Other Diseases Among Men and Women in Agriculture. *Type of Information Collection Request:* Revision (OMB 0925–0406, expiration 11/30/01). *Need and Use of Information Collection:* The Agricultural Health Study is in its third year of follow-up data collection on a prospective cohort of 89,189 farmers, their spouses, and commercial applicators of pesticides from Iowa and North Carolina. Follow-up is not yet complete; an additional two years of follow-up is being requested. *Frequency of Response:* One time. *Affected Public:* Individuals or households, Farms. *Type of Respondents:* Private pesticide applicators and their spouses. The annual reporting burden is as follows: Estimated Number of Respondents: 11,000; *Estimated Number of Responses per Respondent:* 2.2; *Average Burden Hours Per Response:* 1,196; and *Estimated Total Annual Burden Hours Requested:* 13,156. The annualized cost to respondents is estimated at $131, 554. There are no Capital Costs to report. There are no Operating or Maintenance Costs to report.

REQUEST FOR COMMENTS: Written comments and/or suggestions from the public and affected agencies are invited on one or more of the following points: (1) Whether the proposed collection of information is necessary for the proper performance of the function of the agency, including whether the information will have practical utility; (2) The accuracy of the agency's estimate of the burden of the proposed collection of information, including the validity of the methodology and assumptions used; (3) Ways to enhance the quality, utility, and clarity of the information to be collected; and (4) Ways to minimize the burden of the collection of information on those who are to respond, including the use of appropriate automated, electronic, mechanical, or other technological collection techniques or other forms of information technology.

DIRECT COMMENTS TO OMB: Written comments and/or suggestions regarding the items(s) contained in this notice, especially regarding the estimated public burden and associated response time, should be directed to the: Office of Management and Budget, Office of Regulatory Affairs, New Executive Office Building, Room 10235, Washington, DC 20503, Attention: Desk Officer for NIH. To request more information on the proposed project or to obtain a copy of the data collection plans and instruments, contact: Michael C.R. Alavanja, Dr. P.H., Division of Epidemiology and Genetics, National Cancer Institute, Executive Plaza South, Suite 8000, 6120 Executive Boulevard, Rockville, MD 20852, or call non-toll free (301)435–4720, or E-mail your request, including your address to *alavanjam@mail.nih.gov*

COMMENTS DUE DATE: GComments regarding this information collection are best assured of having their full effect if received on or before October 26, 2001.

Dated: September 14, 2001.

Reesa Nichols,

NCI Project Clearance Liaison.

[FR Doc. 01–24033 Filed 9–25–01; 8:45 am]

BILLING CODE 4140–01–M

DEPARTMENT OF HEALTH AND HUMAN SERVICES

National Institutes of Health

Fogarty International Center; Amended Notice of Meeting

Notice is hereby given of a change in the meeting of the Fogarty International Center Advisory Board, September 18, 2001, 8:30 am to September 18, 2001, 5 pm, Lawton Chiles International House, 16 Center Drive, (Building 16), Bethesda, MD, 20892 which was published in the **Federal Register** on September 11, 2001, 66 FR 47234.

The meeting will be held via teleconference on September 18, 2001 at 12 p.m. The meeting is closed to the public.

Dated: September 17, 2001.

LaVerne Y. Stringfield,

Director, Office of Federal Advisory Committee Policy.

[FR Doc. 01–24029 Filed 9–25–01; 8:45 am]

BILLING CODE 4140–01–M

DEPARTMENT OF HEALTH AND HUMAN SERVICES

National Institutes of Health

National Heart, Lung, and Blood Institute; Notice of Closed Meeting

Pursuant to section 19(d) of the Federal Advisory Committee Act, as amended (5 U.S.C. Appendix 2), notice is hereby given of the following meeting.

The meeting will be closed to the public in accordance with the provisions set forth in sections 552b(c)(4) and 552b(c)(6), Title 5 U.S.C., as amended. The grant applications and the discussions could disclose confidential trade secrets or commercial property such as patentable material, and personal information concerning individuals associated with the grant applications the disclosure of which would constitute a clearly unwarranted invasion of personal privacy.

Name of Committee: National Heart, Lung, and Blood Institute Special Emphasis Panel, SCOR Molecular Medicine and Atherosclerosis.

Date: October 24–26, 2001.

Time: 7 pm to 5 pm.

Agenda: To review and evaluate grant applications.

Place: Holiday Inn—Chevy Chase, 5520 Wisconsin Avenue, Bethesda, MD 20815.

Contact Person: William J. Johnson, PhD, NIH/NHLBI/DEA/Review Branch, 6701 Rockledge Drive, Room 7184, Bethesda, MD 20892–9692, 301–435–0277.

(Catalogue of Federal Domestic Assistance Program Nos. 93.233, National Center for Sleep Disorders Research; 93.837, Heart and Vascular Diseases Research; 93.838, Lung Diseases Research; 93.839, Blood Diseases and Resources Research, National Institutes of Health, HHS)

Dated: September 18, 2001.

LaVerne Y. Stringfield,

Director, Office of Federal Advisory Committee Policy.

[FR Doc. 01–24030 Filed 9–25–01; 8:45 am]

BILLING CODE 4140–01–M

DEPARTMENT OF HEALTH AND HUMAN SERVICES

National Institutes of Health

National Heart, Lung, and Blood Institute; Notice of Closed Meeting

Pursuant to section 10(d) of the Federal Advisory Committee Act, as amended (5 U.S.C. Appendix 2), notice is hereby given of the following meeting.

The meeting will be closed to the public in accordance with the provisions set forth in sections 552b(c)(4) and 552b(c)(6), Title 5 U.S.C., as amended. The grant applications and the discussions could disclose confidential trade secrets or commercial property such as patentable material, and personal information concerning individuals associated with the grant applications, the disclosure of which would constitute a clearly unwarranted invasion of personal privacy.

Name of Committee: National Heart, Lung, and Blood Institute Special Emphasis Panel, Mentored Scientist Development Award.

Date: October 4–5, 2001.

Time: 7:30 pm to 4 pm.

Agenda: To review and evaluate grant applications.

Place: Holiday Inn-Chevy Chase, 5520 Wisconsin Avenue, Bethesda, MD 20815.

Contact Person: Roy L. White, PhD, Review Branch, NIH, NHLBI, Rockledge Building II, 6701 Rockledge Drive, Room 7196, Bethesda, MD 20892, 301–435–0291.

This notice is being published less than 15 days prior to the meeting due to the timing limitations imposed by the review and funding cycle.

(Catalogue of Federal Domestic Assistance Program, Nos. 93.233, National Center for Sleep Disorders Research; 93.837, Heart and Vascular Diseases Research; 93.838, Lung Diseases Research; 93.839, Blood Diseases and Resources Research, National Institutes of Health, HHS).

Dated: September 18, 2001.

LaVerne Y. Stringfield,

Director, Office of Federal Advisory Committee Policy.

[FR Doc. 01–24031 Filed 9–25–01; 8:45 am]

BILLING CODE 4140–01–M

DEPARTMENT OF HEALTH AND HUMAN SERVICES

National Institute of Health

National Institute of Diabetes and Digestive and Kidney Diseases; Notice of Meetings

Pursuant to section 10(d) of the Federal Advisory Committee Act, as amended (5 U.S.C. Appendix 2), notice is hereby given of the following meetings.

The meetings will be open to the public as indicated below, with attendance limited to space available. Individuals who plan to attend and need special assistance, such as sign language interpretation or other reasonable accommodations, should notify the Contact Person listed below in advance of the meeting.

The meetings will be closed to the public in accordance with the provisions set forth in sections 552b(c)(4) and 552b(c)(6), Title 5 U.S.C., as amended. The grant applications and the discussions could disclose confidential trade secrets or commercial property such as patentable material, and personal information concerning individuals associated with the grant applications, the disclosure of which would constitute a clearly unwarranted invasion of personal privacy.

Name of Committee: National Institute of Diabetes and Digestive and Kidney Diseases Initial Review Group, Digestive Diseases and Nutrition C Subcommittee.

Date: October 18–19, 2001.

Closed: October 18, 2001, 1 pm to 5 pm.

Agenda: To review and evaluate grant applications.

Place: Double Tree Hotel, 1750 Rockville Pike, Rockville, MD 20852.

Open: October 18, 2001, 5:30 pm to 7 pm.

Agenda: To review procedure and discuss policies.

Place: Double Tree Hotel, 1750 Rockville Pike, Rockville, MD 20852.

Closed: October 19, 2001, 8 am to adjournment.

Agenda: To review and evaluate grant applications.

Place: Double Tree Hotel, 1750 Rockville Pike, Rockville, MD 20852.

Contact Person: Carolyn Miles, PhD, Scientific Research Administrator, Review Branch, DEA, NIDDK, Room 755, 6707 Democracy Boulevard, National Institutes of Health, Bethesda, MD 20892, (301)594–7791.

Name of Committee: National Institute of Diabetes and Digestive and Kidney Diseases Initial Review Group, Kidney, Urologic and Hematologic Diseases D Subcommittee.

Date: October 18–19, 2001.

Open: October 18, 2001, 5:30 pm to 7 pm.

Agenda: To review procedures and discuss policies.

Place: Double Tree Hotel, 1750 Rockville Pike, Rockville, MD 20852.

Closed: October 19, 2001, 8 am to adjournment.

Agenda: To review and evaluate grant applications.

Place: Double Tree Hotel, 1750 Rockville Pike, Rockville, MD 20852.

Contact Person: Neal A. Musto, Phd, Scientific Review Administrator, Review Branch, DEA, NIDDK, Room 750, 6707 Democracy Boulevard, National Institutes of Health, Bethesda, MD 20892–6600, (301)594–7798, muston@extra.niddk.nih.gov

Name of Committee: National Institute of Diabetes and Digestive and Kidney Diseases Initial Review Group, Diabetes, Endocrinology and Metabolic Diseases B Subcommittee.

Date: October 18–19, 2001.

Open: October 18, 2001, 5:30 pm to 7 pm.

Agenda: To review procedures and discuss policies.

Place: Double Tree Hotel, 1750 Rockville Pike, Rockville, MD 20852.

October 19, 2001, 8 am to adjournment.

Agenda: To review and evaluate grant applications.

Place: Double Tree Hotel, 1750 Rockville Pike, Rockville, MD 20852.

Contact Person: Michele L. Barnard, PhD, Scientific Review Administrator, Scientific

Review Administrator, Review Branch, DEA, NIDDK, National Institutes of Health, Room 657, 6707 Democracy Boulevard, Bethesda, MD 20892, 301/594–889.

(Catalogue of Federal Domestic Assistance Program Nos, 93.847, Diabetes, Endocrinology and Metabolic Research; 93.848, Digestive Diseases and Nutrition Research; 93.849, Kidney Diseases, Urology and Hematology Research, National Institutes of Health, HHS)

Dated: September 17, 2001.

LaVerne Y. Stringfield,

Director, Office of Federal Advisory Committee Policy.

[FR Doc. 01–24028 Filed 9–25–01; 8:45 am]

BILLING CODE 4140–01–M

DEPARTMENT OF HEALTH AND HUMAN SERVICES

National Institutes of Health

National Institute on Alcohol Abuse and Alcoholism; Notice of Closed Meeting

Pursuant to section 10(d) of the Federal Advisory Committee Act, as amended (5 U.S.C. Appendix 2), notice is hereby given of the following meeting.

The meeting will be closed to the public in accordance with the provisions set forth in sections 552b(c)(4) and 552b(c)(6), Title 5 U.S.C., as amended. The grant applications and the discussions could disclose confidential trade secrets or commercial property such as patentable material, and personal information concerning individuals associated with the grant applications, the disclosure of which would constitute a clearly unwarranted invasion of personal privacy.

Name of Committee: National Institute of Alcohol Abuse and Alcoholism Special Emphasis Panel.

Date: October 18, 2001.

Time: 7:30 am to 8:30 am.

Agenda: To review and evaluate grant applications.

Place: Bethesda Marriott Hotel, 5151 Pooks Hill Road, Bethesda, MD 20814.

Contact Person: L. Tony Beck, Phd. Scientific Review Administrator, National Institute of Alcohol Abuse and Alcoholism, National Institutes of Health, Suite 409, 6000 Executive Blvd., MSC 7003, Bethesda, MD 20892–7003, 301–443–0913, *lbeck@mail.nih.gov.*

Catalogue of Federal Domestic Assistance Program Nos. 93.271, Alcohol Research Career Development Awards for Scientists and Clinicians; 93.272, Alcohol National Research Service Awards for Research Training; 93.272, Alcohol Research Programs; 93.891, Alcohol Research Center Grants, National Institutes of Health, HHS)

Dated: September 18, 2001.

Laverne Y. Stringfield,

Director, Office of Federal Advisory Committee Policy.

[FR Doc. 01–24032 Filed 9–25–01; 8:45 am]

BILLING CODE 4140–01–M

DEPARTMENT OF HEALTH AND HUMAN SERVICES

Public Health Service

National Toxicology Program; Amended Notice of Meeting

Notice is hereby given of the cancellation of the meeting of the National Toxicology Program (NTP) Advisory Committee on Alternative Toxicological Methods. The meeting was originally scheduled for September 25, 2001, 9 am to adjournment, in the Rodbell Auditorium, Rall Building, South Campus, National Institute of Environmental Health Sciences (NIEHS), 111 T.W. Alexander Drive, Research Triangle Park, North Carolina. A notice of this meeting was published in the **Federal Register** (August 31, 2001: Vol. 66, No. 170, pages 46020–46021). Further inquiry can be directed to the NTP Executive Secretary, Dr. Mary S. Wolfe (NTP, P.O. Box 12233, 111 T.W. Alexander Drive, A3–07, NIEHS, Research Triangle Park, North Carolina 27709, telephone: 919–541–3971 and FAX: 919–541–0295).

Dated: September 18, 2001.

Samuel H. Wilson,

Deputy Director, National Institute of Environmental Health Sciences.

[FR Doc. 01–24034 Filed 9–25–01; 8:45 am]

BILLING CODE 4140–01–M

DEPARTMENT OF HEALTH AND HUMAN SERVICES

Substance Abuse and Mental Health Services Administration

Center for Substance Abuse Treatment; Notice of Meeting

Pursuant to Pub. L. 92–463, notice is hereby given of a Teleconference Meeting of the Center for Substance Abuse Treatment (CSAT) National Advisory Council to be held in September 2001.

The meeting will include the review, discussion and evaluation of grant applications reviewed by the IRG. Therefore, the meeting will be closed to the public as determined by the SAMHSA Administrator, in accordance with Title 5 U.S.C. 552b(c)(6) and 5 U.S.C. App. 2, § 10(d).

Substantive program information, a summary of the meeting and roster of Council members may be obtained from the contact listed below.

If special accommodations are needed for persons with disabilities, please notify the Contact listed below.

Committee Name: Center for Substance Abuse Treatment, National Advisory Council.

Meeting Date: September 21, 2001.

Place: Center for Substance Abuse Treatment, 5515 Security Lane, 6th Floor Conference Room, Suite 615, Rockville, MD 20852.

Type: Closed: September 21, 2001—10–11 a.m.

Contact: Cynthia Graham, 5600 Fishers Lane, RW II, Ste 618, Rockville, MD 20857, Telephone: (301) 443–8923; FAX: (301) 480–6077. E-mail: *cgraham@samhsa.gov*

This notice is being published less than fifteen days prior to the meeting date, due to urgent needs to meet the timing limitation imposed by the review and funding cycle.

Dated: September 20, 2001.

Toian Vaughn,

Committee Management Officer, Substance Abuse and Mental Health Services Administration.

[FR Doc. 01–24036 Filed 9–25–01; 8:45 am]

BILLING CODE 4162–20–P

DEPARTMENT OF HOUSING AND URBAN DEVELOPMENT

[Docket No. FR–4655–N–22]

Notice of Proposed Information Collection: Comment Request; Housing Counseling Program

AGENCY: Office of the Assistant Secretary for Housing, HUD.

ACTION: Notice.

SUMMARY: The proposed information collection requirement described below will be submitted to the Office of Management and Budget (OMB) for review, as required by the Paperwork Reduction Act. The Department is soliciting public comments on the subject proposal.

DATES: *Comments Due Date:* November 26, 2001.

ADDRESSES: Interested persons are invited to submit comments regarding this proposal. Comments should refer to the proposal by name and/or OMB Control Number and should be sent to: Wayne Eddins, Reports Management Officer, Department of Housing and Urban Development, 451 7th Street, SW, L'Enfant Plaza Building, Room 8001, Washington, DC 20410.

FOR FURTHER INFORMATION CONTACT: Meg Burns, Director, Program Support Division, Department of Housing and

Urban Development, 451 7th Street SW, Washington, DC 20410, telephone (202) 708–0317 x3989 (this is not a toll free number) for copies of the proposed forms and other available information.

SUPPLEMENTARY INFORMATION: The Department is submitting the proposed information collection to OMB for review, as required by the Paperwork Reduction Act of 1995 (44 U.S.C. Chapter 35, as amended).

This Notice is soliciting comments from members of the public and affected agencies concerning the proposed collection of information to: (1) Evaluate whether the proposed information collection will serve as an appropriate measure of the activities and the performance of housing counseling agencies; (2) Evaluate the accuracy of the agency's estimate of the burden of the proposed collection of information; (3) Enhance the quality, utility, and clarity of the information to be collected; and (4) Minimize the burden of the collection of information on those who are to respond, including the use of appropriate automated collection techniques or other forms of information technology, e.g., permitting electronic submission of responses.

The Department is especially interested in learning whether the proposed information collection changes are sufficient to determine and measure performance in the Housing Counseling Program.

This Notice also lists the following information:

Title of Proposal: Housing Counseling Program.

OMB Control Number, if applicable: 2502–0261.

Description of the need for the information and proposed use: Section 106 of the Housing and Community Development Act of 1974 authorizes HUD to contract with organizations to provide counseling to tenants and homeowners to assist them in improving their housing conditions and in meeting the responsibilities of tenancy and home ownership. Counseling agencies are required to submit their qualifications to provide such services. HUD-approved agencies can compete for program funds. Successful grant applicants are required to submit performance data to enable HUD to evaluate the effectiveness of the program.

Agency form numbers, if applicable: HUD–9900, HUD–9902, and HUD–9908.

Estimation of the total numbers of hours needed to prepare the information collection including number of respondents, frequency of response, and hours of response: The total number of responses is 2,675. Frequency of reporting is annual for each of the three forms. Total response hours are 1,940: HUD–9900, 8 hours; HUD–9902, 1 hour; and HUD–9908, 10 minutes. The HUD–9900 consolidates and replaces the HUD–9900–A, HUD–9900–B, and HUD–9900–C. Two forms approved under the previous information collection request, HUD–9903 and HUD–9921, are deleted.

Status of the proposed information collection: Revision of currently approved collection.

Authority: The Paperwork Reduction Act of 1995, 44 U.S.C., Chapter 35, as amended.

Dated: September 19, 2001.

Sean Cassidy,

General Deputy Assistant Secretary for Housing.

[FR Doc. 01–24006 Filed 9–25–01; 8:45 am]

BILLING CODE 4210–27–M

DEPARTMENT OF THE INTERIOR

Fish and Wildlife Service

Receipt of Application for Endangered Species Permit

AGENCY: Fish and Wildlife Service, Interior

ACTION: Notice of receipt of application for endangered species permit.

SUMMARY: The following applicants have applied for permits to conduct certain activities with endangered species. This notice is provided pursuant to Section 10(c) of the Endangered Species Act of 1973, as amended (16 U.S.C. 1531 *et seq.*).

If you wish to comment, you may submit comments by any one of several methods. You may mail comments to the Service's Regional Office (see **ADDRESSES**). You may also comment via the internet to *victoria—davis@fws.gov*. Please submit comments over the internet as an ASCII file avoiding the use of special characters and any form of encryption. Please also include your name and return address in your internet message. If you do not receive a confirmation from the Service that we have received your internet message, contact us directly at either telephone number listed below (see **FURTHER INFORMATION**). Finally, you may hand deliver comments to either Service office listed below (see **ADDRESSES**). Our practice is to make comments, including names and home addresses of respondents, available for public review during regular business hours. Individual respondents may request that we withhold their home address from the administrative record. We will honor such requests to the extent allowable by law. There may also be other circumstances in which we would withhold from the administrative record a respondent's identity, as allowable by law. If you wish us to withhold your name and address, you must state this prominently at the beginning of your comments. However, we will not consider anonymous comments. We will make all submissions from organizations or businesses, and from individuals identifying themselves as representatives or officials of organizations or businesses, available for public inspection in their entirety.

DATES: Written data or comments on these applications must be received, at the address given below, by October 26, 2001.

ADDRESSES: Documents and other information submitted with these applications are available for review, *subject to the requirements of the Privacy Act and Freedom of Information Act*, by any party who submits a written request for a copy of such documents to the following office within 30 days of the date of publication of this notice: U.S. Fish and Wildlife Service, 1875 Century Boulevard, Suite 200, Atlanta, Georgia 30345 (Attn: Victoria Davis, Permit Biologist). Telephone: 404/679–4176; Facsimile: 404/679–7081.

FOR FURTHER INFORMATION CONTACT: Victoria Davis, Telephone: 404/679–4176; Facsimile: 404/679–7081.

SUPPLEMENTARY INFORMATION: *Applicant:* Jack Kilgore, U.S. Army Corps of Engineers, Vicksburg, Mississippi, TE045109–0

The applicant requests authorization to take (capture, hold temporarily, identify, anesthetize, take the two most anterior pectoral fin rays and associated tissue, floy tag, PIT tag, and stomach flush) the pallid sturgeon (*Scaphirhynchus albus*) from the Lower Mississippi River (from the mouth of the Missouri River to the mouth of the Mississippi River). Little information exists on pallid sturgeons in the Lower Mississippi River, which hampers recovery efforts and river management decisions. Consequently, a multi-year field study in the Lower Mississippi River is being developed by the Corps of Engineers, in cooperation with the U.S. Fish and Wildlife Service, to quantify habitat preferences and life history characteristics of the pallid sturgeon. The objectives of the study are to evaluate habitat preferences by life stage and season; quantify mortality, density, age, and growth; and to evaluate diet and food preferences.

Applicant: Heather Garland, The Nature Conservancy of Tennessee, TE045107–0

The applicant requests authorization to take (survey, capture, identify, measure, and release) gray bat (*Myotis grisescens*), Indiana bat (*Myotis sodalis*), and Virginia big-eared bat (*Corynorhinus townsendii virginianus*) to survey and determine significant summer bat roost caves, to survey protected summer roost sites in order to determine population numbers as well as confirm colony type (maternity or bachelor, in the case of the gray bat), and to survey forested areas and bottomland hardwood areas for bat species usage. The proposed activities will take place at cave sites and forests across Tennessee and in bottomland hardwood forests around the Hatchie River.

Applicant: James E. Pilgreen, Carrollton, Mississippi, TE047127–0

The applicant requests authorization to take (survey, capture, band nestlings, mark nests) the Alabama beach mouse (*Peromyscus polionotus ammobates*) and the Perdido Key beach mouse (*Peromyscus polionotus trissylepsis*) to conduct surveys to determine the presence of beach mice on areas with existing incidental take permits. The activities will take place in Baldwin County, Alabama.

Applicant: Michelle Caviness, Ozark National Forest Service, Boston Mountain District, Fayetteville, Arkansas, TE047123–0

The applicant requests authorization to take (survey, capture, identify, measure, band, and release) the gray bat (*Myotis grisescens*), Indiana bat (*Myotis sodalis*), and Ozark big-eared bat (*Corynorhinus townsendii ingens*) to determine the presence and the diversity of the population. The proposed activities will take place over water sources on the Ozark-Saint Francis National Forests and the Ouachita National Forest in Arkansas.

Applicant: Rex Roberg, Roberg Environmental Consulting Services, Inc., Cabot, Arkansas, TE047483–0

The applicant requests authorization to take (survey, capture, clip elytron, relocate, and release) the American burying beetle (*Nicrophorus americanus*) to determine presence and to relocate any found during the construction phase of the municipal Class I Solid Waste Landfill facilities for the City of Fort Smith. The proposed activities will take place in Crawford and Sebastian Counties, Arkansas.

Dated: September 13, 2001.

Sam D. Hamilton,

Regional Director.

[FR Doc. 01–24038 Filed 9–25–01; 8:45 am]

BILLING CODE 4310–55–P

DEPARTMENT OF THE INTERIOR

Fish and Wildlife Service

Aquatic Nuisance Species Task Force Ruffe Control Committee Meeting

AGENCY: Fish and Wildlife Service, Interior.

ACTION: Notice of meeting.

SUMMARY: This notice announces a meeting of the Aquatic Nuisance Species (ANS) Task Force Ruffe Control Committee. The meeting topics are identified in the **SUPPLEMENTARY INFORMATION.**

DATES: The Ruffe Control Committee will meet from 1 p.m. to 5 p.m., Tuesday, October 16, 2001, and from 8 a.m. to noon, Wednesday, October 17, 2001.

ADDRESSES: The Ruffe Control Committee Meeting will be held in the Days Inn, 2403 U.S. Highway 41, Marquette, Michigan.

FOR FURTHER INFORMATION CONTACT: Sharon Gross, Executive Secretary, Aquatic Nuisance Species Task Force, at 703–358–2308 or by e-mail at sharon_gross@fws.gov or Mark Dryer, Ruffe Control Committee Chair, at 715–682–6185 ext. 201.

SUPPLEMENTARY INFORMATION: Pursuant to section 10(a)(2) of the Federal Advisory Committee Act (5 U.S.C. App. I), this notice announces a meeting of the Aquatic Nuisance Species Task Force Ruffe Control Committee. The ANS Task Force was established by the Nonindigenous Aquatic Nuisance Prevention and Control Act of 1990.

Topics to be covered during the Ruffe Control Committee meeting include: an update of the current status of ruffe based on recent field investigations; a discussion to implement the Ruffe Control Program; and a review of actions for the upcoming year.

Minutes of the meeting will be maintained by the Executive Secretary, Aquatic Nuisance Species Task Force, Suite 810, 4401 North Fairfax Drive, Arlington, Virginia 22203–1622, and will be available for public inspection during regular business hours, Monday through Friday.

Dated: September 14, 2001.

Everett Wilson,

Acting Co-Chair, Aquatic Nuisance Species Task Force, Assistant Director—Fisheries and Habitat Restoration.

[FR Doc. 01–24056 Filed 9–25–01; 8:45 am]

BILLING CODE 4310–55–M

DEPARTMENT OF THE INTERIOR

Bureau of Indian Affairs

Paperwork Reduction Act Requests, Submission to OMB

AGENCY: Bureau of Indian Affairs, Interior.

ACTION: Notice.

SUMMARY: This notice announces that the Information Collection Requests for the Bureau of Indian Affairs Higher Education Grant Program Annual Report Form, OMB No. 1076–0106, and the Higher Education Grant Program Application, OMB No. 1076–0101 require reinstatement. The information collection requirements, with no appreciable changes, described below are being submitted to the Office of Management and Budget (OMB) for review as required by the Paperwork Reduction Act of 1995.

DATES: Submit your comments and suggestions on or before October 26, 2001.

ADDRESSES: Written comments should be sent directly to Office of Information and Regulatory Affairs, Office of Management and Budget, 725 17th Street, NW., Washington, DC 20503, Attention: Desk Officer for Department of the Interior. Please submit copies of any comments to Garry R. Martin, Bureau of Indian Affairs, Office of Indian Education Programs, 1849 C Street NW., Washington, DC 20240–0001, or hand deliver to Room 3526–MIB at the above address.

FOR FURTHER INFORMATION CONTACT: Copies of the information collection may be obtained by contacting Garry R. Martin, 202–208–3478. Comments can be reviewed at the location listed in the **ADDRESSES** section between the hours of 8 a.m. to 4:30 p.m. Monday through Friday.

SUPPLEMENTARY INFORMATION:

Abstract

The information collection is necessary to request applications for this program and to assess the need for this program as required by 25 CFR 40. One comment was received during the comment period for the 60-day **Federal Register** notice (66 FR 21174). The commenter believes that this documentation is critical to support their future requests for increased funding of student grants.

Comments

Comments are invited on:

(a) Whether these information collections are necessary for the proper

performance of the functions of the agency, including whether the information will have practical utility;

(b) The accuracy of the agency's estimate of the burden (hours and cost) of the collection of information, including the validity of the methodology and assumptions used;

(c) Ways to enhance the quality, utility and clarity of the information to be collected; and

(d) Ways to minimize the burden of the collection of the information on the respondents, including through the use of automated collection techniques or other forms of information technology.

Please note that an agency may not conduct or sponsor, and a person is not required to respond to, a collection of information unless it displays a currently valid OMB control number. Each proposed information collection contains the following: Type of Review requested, e.g., new, revision, extension, reinstatement, existing; Title; Summary of collection; Description of the need for, and proposed use of, the information; respondents and frequency of collection; Reporting and/or Recordkeeping burden.

Type of Review: Reinstatement.

Title: Higher Education Grant Program Annual Report Form.

This is a compilation of data from tribes, tribal organizations that participate in the Bureau of Indian Affairs Higher Education Grant Program. The information is used to account for the funds appropriated for this program.

OMB approval number: 1076–0106.

Frequency: Annually.

Description of respondents: Tribes, Tribal Organizations.

Estimated completion time: 3 hours.

Number of Annual responses: 125.

Annual Burden hours: 375 hours.

Type of Review: Reinstatement.

Title: Higher Education Grant Program Application.

The information is used by the tribe or tribal organization to determine the eligibility of the respondents for this program.

OMB approval number: 1076–0101.

Frequency: Annually.

Description of respondents: Eligible American Indian and Alaska Native students.

Estimated completion time: 1 hour.

Number of Annual responses: 14,000.

Annual Burden hours: 14,000 total hours.

Dated: September 4, 2001.

Neal A. McCaleb,

Assistant Secretary—Indian Affairs.

[FR Doc. 01–24035 Filed 9–25–01; 8:45 am]

BILLING CODE 4310–02–P

DEPARTMENT OF JUSTICE

Notice of Lodging of Consent Decree Pursuant to the Comprehensive Environmental Response, Compensation and Liability Act

In accordance with 28 CFR 50.7 and Section 122 of the Comprehensive Environmental Response, Compensation and Liability Act (''CERCLA''), 42 U.S.C. 9622, the Department of Justice gives notice that a proposed consent decree in *United States* v. *Norrell Dearing, et al.* v. *First Nationwide Financial Corp., et al.,* Civil No. 4:89–CV–2002 (N.D. Ohio), was lodged with the United States District Court for the Northern District of Ohio on September 14, 2001, pertaining to the Old Mill Superfund Site (the ''Site''), located in the Village of Rock Creek, Ashtabula County, Ohio. The proposed consent decree would resolve the United States' civil claims under Sections 106 and 107 of CERCLA, 42 U.S.C. 9606 and 9607, and Section 7003 of the Solid Waste Disposal Act, as amended (''RCRA''), 42 U.S.C. 6973, against seven defendants, and claims asserted against four third-party defendants, named in this action.

Under the proposed consent decree, five Settling Performing Parties (Lord Corp., Meritor Automotive, Inc., Molded Fiberglass Cos., Premix, Inc., and The Stackpole Corp.) would be obligated to finance and perform certain changes to the remedy, and operation and maintenance (''O&M'') of the remedial action, at the Site as specified in the U.S. Environmental Protection Agency's (''EPA's'') Record of Decision (''ROD''), issued August 7, 1985, at an estimated net present value cost of $1.8 million. the Settling Performing Parties would be required to reimburse the Superfund $7.325 million toward the United States' past costs at the Site. The Settling Performing Parties would also be required to reimburse the State of Ohio (the ''State'') $0.76 million toward the State's past costs at the Site. In addition, the Settling Performing Parties would be required to reimburse EPA's and the State's future response costs at the Site, as well as document O&M costs incurred by the State after August 1, 2001, through the date of assumption of the O&M by the Settling Performing Parties. The remaining six Settling Non-Performing Parties (Aardvark Associates, Inc.; Combustion Engineering, Inc.; First Nationwide National Bank; Formica Corporation; Jack Webb; and Millenium Holdings, Inc.) will make payments to the Settling Performing Parties to help finance the Settling Performing Parties' obligations under the proposed consent decree.

The Department of Justice will receive, for a period of thirty (30) days from the date of this publication, comments relating to the proposed consent decree. Comments should be addressed to the Assistant Attorney General, Environment and Natural Resources Division, United States Department of Justice, Washington, D.C. 20530, and should refer to *United States* v. *Norell Dearing, et al.* v. *First Nationwide Financial Corp., et al.,* Civil No. 4:89–CV–2002 (N.D. Ohio), and DOJ Reference No. 90–11–2–63A. Commenters may request an opportunity for a public meeting in the affected area, in accordance with Section 7003(d) of RCRA, 42 U.S.C. § 6973(d).

The proposed consent decree may be examined at: (1) the Office of the United States Attorney for the Northern District of Ohio, 1800 Bank One Center, 600 Superior Avenue East, Cleveland, Ohio 44114–2600 (216–622–3600); and (2) the United States Environmental Protection Agency (Region 5), 77 West Jackson Boulevard, Chicago, Illinois 60604–3590 (contact: Nola M. Hicks (312–886–7949)). A copy of the proposed consent decree may be obtained by mail from the Consent Decree Library, U.S. Department of Justice, P.O. Box 7611, Washington, D.C. 20044–7611. In requesting a copy, please refer to the referenced case and DOJ Reference Number and enclose a check in the amount of $29.00 for the consent decree only (116 pages, at 25 cents per page reproduction costs), or $45.75 for the consent decree and all appendices (183 pages), made payable to the Consent Decree Library.

William D. Brighton,

Assistant Chief, Environmental Enforcement Section, Environmental and Natural Resources Division.

[FR Doc. 01–23998 Filed 9–25–01; 8:45 am]

BILLING CODE 4410–15–M

DEPARTMENT OF JUSTICE

Notice of Lodging of Consent Decree Under the Comprehensive Environmental Response, Compensation, and Liability Act

Notice is hereby given that on September 14, 2001 a proposed Consent Decree (''Decree'') in *United States* v. *RSO, Inc.*, Civil Action No. 01–WM–1801, was lodged with the United States District Court for the District of Colorado. The United States filed this action pursuant to Section 107(a)(4) of the Comprehensive Environmental Response, Compensation, and Liability Act (''CERCLA''), 42 U.S.C. 9607(a)(4),

for costs EPA incurred in responding to the release or threatened release of hazardous substances at or from the RAMP Industries Site in Denver, Colorado. Under the terms of the Decree RSO, Inc. will pay the United States $200,000. This payment amount is based on an analysis of defendant's financial resources.

The Department of Justice will receive for a period of thirty (30) days from the date of this publication comments relating to the Decree. Comments should be addressed to the Assistant Attorney General, Environment and Natural Resources Division, P.O. Box 7611, U.S. Department of Justice, Washington, DC 20044–7611, and should refer to *United States* v. *RSO, Inc.*, D.J. Ref. 90–11–2–1290/3.

The Decree may be examined at the offices of EPA Region VIII, 999 18th Street, Suite 500 South Tower, Denver, Colorado. A copy of the Decree may also be obtained by mail from the Consent Decree Library, P.O. Box 7611, U.S. Department of Justice, Washington, D.C. 20044–7611. In requesting a copy of the Decree, please enclose a check payable to the Consent Decree Library for $4.25 for a complete copy of the decree (25 cents per page reproduction cost).

Robert Brook,

Assistant Section Chief, Environmental Enforcement Section, Environment and Natural Resources Division.

[FR Doc. 01–23997 Filed 9–25–01; 8:45 am]

BILLING CODE 4410–15–M

DEPARTMENT OF JUSTICE

Antitrust Division

United States v. 3D Systems Corporation and DTM Corporation; Proposed Final Judgment and Competitive Impact Statement

Notice is hereby given pursuant to the Antitrust Procedures and Penalties Act, 15 U.S.C. Section 16(b) through (h), that a proposed Final Judgment, Stipulation and Competitive Impact Statement have been filed with the United States District Court for the District of Columbia in *United States of America* v. *3D Systems Corporation and DTM Corporation*, Civil Action No. No. 1:01CV01237. On June 6, 2001, the United States filed a Complaint alleging that 3D Systems Corporation's proposed acquisition of DTM Corporation would violate Section 7 of the Clayton Act, as amended, 15 U.S.C. 18. The proposed Final Judgment, filed on August 16, 2001, requires the defendants to license their rapid prototyping patents to a company that will compete in the U.S. market. Copies of the Complaint, proposed Final Judgment and Competitive Impact Statement are available for inspection at the Department of Justice in Washington, DC in Room 215, 325 Seventh Street, NW., and at the Office of the Clerk of the United States District Court for the District of Columbia, 333 Constitution Avenue, NW., Washington, DC.

Public comment is invited within 60 days of the date of this notice. Such comments, and responses thereto, will be published in the **Federal Register** and filed with the Court. Comments should be directed to J. Robert Kramer II, Chief, Litigation II Section, Antitrust Division, Department of Justice, 1401 H Street, NW., Suite 3000, Washington, DC, 20530, (telephone: (202) 307–0924).

Mary Jean Moltenbrey,

Director of Civil Nonmerger Enforcement.

In The United States District Court for the District of Columbia

[Civil No: 1.01CV01237 (GK)]

United States of America, Plaintiff, v. 3D Systems Corporation and DTM Corporation, Defendants

Filed: August 16, 2001.

Stipulation and Order

It is stipulated by and between the undersigned parties, by their respective attorneys, as follows:

(1) The Court has jurisdiction over the subject matter of this action and, for purposes of this case only, over each of the parties hereto, and venue of this action is proper in the United States District Court for the District of Columbia.

(2) The parties stipulate that a Final Judgment in the form hereto attached may be filed and entered by the Court, upon the motion of any party or upon the Court's own motion, at any time after compliance with the requirements of the Antitrust Procedures and Penalties Act (15 U.S.C. 16), and without further notice to any party or other proceedings, provided that the United States of America (hereinafter ''United States'') has not withdrawn its consent, which it may do at any time before the entry of the proposed Final Judgment by serving notice thereof on the parties and by filing that notice with the Court.

(3) Defendants shall abide by and comply with the provisions of the proposed Final Judgment, pending the Judgment's entry by the Court, or until expiration of time for all appeals of any Court ruling declining entry of the proposed Final Judgment, and shall, from the date of the signing of this Stipulation by the parties, comply with all the terms and provisions of the proposed Final Judgment as though the same were in full force and effect as an order of the Court.

(4) Defendants shall not consummate the transaction sought to be enjoined by the Complaint herein before the Court has signed this Stipulation and Order.

(5) This Stipulation shall apply with equal force and effect to any amended proposed Final Judgment agreed upon in writing by the parties and submitted to the Court.

(6) In the event (a) the United States has withdrawn its consent, as provided in paragraph (2) above, or (b) the proposed Final Judgment is not entered pursuant to this Stipulation, the time has expired for all appeals of any Court ruling declining entry of the proposed Final Judgment, and the Court has not otherwise ordered continued compliance with the terms and provisions of the proposed Final Judgment, then the parties are released from all further obligations under this Stipulation, and the making of this Stipulation shall be without prejudice to any party in this or any other proceeding.

(7) The defendants represent that the divestiture ordered in the proposed Final Judgment can and will be made, and that the defendants will later raise no claims of mistake, hardship or difficulty of noncompliance as grounds for asking the Court to modify any of the divestiture or termination provisions contained therein.

(8) The parties stipulate that Appendices IIA. and IV of the proposed Final Judgment, relating to defendants' patent applications, shall be filed under seal.

For plaintiff United States of America.
Dando B. Cellini, Esq.
Paul A. Moore III, Esq.
U.S. Department of Justice, Antitrust Division, Litigation II, 1401 H Street, NW, Suite 4000, Washington, DC 20005, (202) 307–0829.

For defendant DTM Corporation.
Charles F. Rule, Esq. (#370818)
Fried Frank Harris Shriver and Jacobson, 1001 Pennsylvania Ave, N.W., Suite 800, Washington, D.C. 20004, (202) 639–7300

For defendant 3D Systems Corporation.
John A. Herfort, Esq.
Gibson, Dunn & Crutcher LLP, 200 Park Avenue, New York, NY 10166, (212) 351–3832.

For defendant 3D Systems Corporation.
Charles E. Biggio, Esq.
Akin, Gump, Strauss, Hauer & Feld LLP, 590 Madison Avenue, New York, NY 10022, (212) 872–1010.

For defendant 3D Systems Corporation.
David Donohoe, Esq. (#3426);

Akin, Gump, Strauss, Hauer & Feld LLP, 1333 New Hampshire Avenue, NW, Washington, DC 20036, (202) 887–4000.

Order

It is so ordered by the Court, this 16th day of August, 2001.

In the United States District Court for the District of Columbia

[Civil No: 1:01CV01237 (GK)]

United States of America, Plaintiff, v. 3D Systems Corporation and DTM Corporation, Defendants.

Filed: August 16, 2001.

Final Judgment

Whereas, plaintiff, United States of America, filed its Complaint on June 6, 2001, plaintiff and defendants, 3D Systems Corporation (''3D'') and DTM Corporation (''DTM''), by their respective attorneys, have consented to the entry of this Final Judgment without trial or adjudication of any issue of fact or law, and without this Final Judgment constituting any evidence against or admission by any party regarding any issue of fact or law;

And Whereas, defendants agree to be bound by the provisions of this Final Judgment pending its approval by the Court;

And Whereas, the essence of this Final Judgment is the prompt and certain divestiture of certain rights or assets by the defendants to assure that competition is not substantially lessened;

And Whereas, plaintiff requires defendants to make certain divestitures for the purpose of remedying the loss of competition alleged in the Complaint;

And Whereas, defendants have represented to the United States that the divestitures required below can and will be made and that defendants will later raise no claim of hardship or difficulty as grounds for asking the Court to modify any of the divestiture provisions contained below;

Now Therefore, before any testimony is taken, without trial or adjudication of any issue of fact or law, and upon consent of the parties, it is Ordered, Adjudged and Decreed:

I. Jurisdiction

This Court has jurisdiction over the subject matter of and, for purposes of this case only, each of the parties to this action. The Complaint states a claim upon which relief may be granted against defendants under Section 7 of the Clayton Act, as amended (15 U.S.C. 18).

II. Definitions

As used in this Final Judgment:

A. ''Acquirer'' means the entity to whom defendants divest the Divestiture Assets.

B. ''3D'' means defendant 3D Systems Corporation, a Delaware corporation with its headquarters in Valencia, California, its successors and assigns, and its subsidiaries, divisions, groups, affiliates, partnerships and joint ventures, including 3D Systems, Inc., and their directors, officers, managers, agents, and employees.

C. ''DTM'' means defendant DTM Corporation, a Texas corporation with its headquarters in Austin, Texas, its successors and assigns, and its subsidiaries, divisions, groups, affiliates, partnerships and joint ventures, and their directors, officers, managers, agents, and employees.

D. ''Defendants'' means, collectively or individually as the context requires, DTM and/or 3D.

E. ''Divestiture Assets'' means (1) a perpetual, assignable, transferable, fully paid-up (except as permitted by Section IV(E) below), non-exclusive license (without the right to sublicense, except for establishing distribution and contracting out manufacturing) under the RP Patents to develop, test, produce, market, sell, or distribute, or to supply any support or maintenance services for, products for use only in the field of either (but not both) the SL Technology or the LS Technology, which technology shall be the technology currently used by the Acquirer to manufacture RP Industrial Equipment (the ''Selected Technology''); and (2) the RP Assets.

F. ''North America'' means Canada, Mexico and the United States.

G. ''RP Assets'' means (1) a list of all North American purchasers of RP Industrial Equipment from 3D, if the Selected Technology is SL Technology, or from DTM, if the Selected Technology is LS Technology; (2) all software copyright licenses needed by Acquirer to purchase and resell both defendants' used RP Industrial Equipment in North America; and (3) at the option of the Acquirer, DTM's plant located at 1611 Headway Circle, Bldg. 1, Austin, Texas (''Plant'').

H. ''RP Patents'' means all North American patents owned by or licensed to defendants (including patents relating to materials and software), as of the date of filing of this Final Judgment, including all subsequent continuations, continuation-in-part, divisions, reexaminations or reissues thereof, if any, as well as any patents that have been applied for as of the date of filing of this Final Judgment but have not been issued covering technology marketed by defendants as of the date of filing of this Final Judgment, specifically including but not limited to the parents listed in Appendix I and applied for parents listed in Appendix IIA. annexed hereto, but specifically excluding those Inkjet Technology patents listed in Appendix III and applied for Inkjet Technology patents listed in Appendix IV annexed hereto and those licenses granted to 3D and DTM listed in Appendix V annexed hereto.

I. ''LS Technology'' means technology (other than Inkjet Technology) that uses data to form, by heat, a three-dimensional object, layer-by-layer, from a sinterable powder material.

J. ''SL Technology'' means technology (other than Inkjet Technology) that uses data to form, by radiation, a three-dimensional object, layer-by-layer, from a liquid, photocurable material.

K. ''Inkjet Technology'' shall mean and include equipment, systems, supplies, software, processess or other technology utilized in the fabrication of three-dimensional objects from jettable materials.

L. ''RP Industrial Equipment'' means products or processes incorporating LS Technology or SL Technology, but not the other, and not Inkjet Technology.

M. ''Selected Technology'' means whichever one of the LS Technology or the SL Technology is currently used by the Acquirer to manufacture RP Industrial Equipment.

III. Applicability

A. This Final Judgment applies to 3D and DTM, as defined above, and all other persons in active concert or participation with either of them who receive actual notice of this Final Judgment by personal service or otherwise.

B. Defendants shall require, as a condition of the sale or other disposition of all or substantially all of their assets or of lesser business units that include the Divestiture Assets, that the purchaser of the Divestiture Assets agrees to be bound by the provisions of this Final Judgment, provided, however, that defendants need not obtain such an agreement from the Acquirer.

IV. Divestitures

A. Defendants are ordered and directed, within one hundred twenty (120) calendar days after the filing of this Final Judgment, or five (5) days after notice of entry of this Final Judgment by the Court, whichever is later, to divest the Divestiture Assets in a manner consistent with this Final Judgment to an Acquirer acceptable to the United States in its sole discretion. The United States, in its sole discretion, may agree to extensions of this time period of up to sixty (60) days, and shall

notify the Court in such circumstances. Defendants agree to use their best efforts to divest the Divestiture Assets as expeditiously as possible.

B. Defendants shall provide Acquirer with all software copyright licenses needed by Acquirer to purchase and resell defendants' used RP Industrial Equipment in North America, which licenses shall be on terms no less favorable than defendants offer to other purchased and resellers of their used RP Industrial Equipment.

C. The Acquirer shall be a firm that currently manufactures RP Industrial Equipment in the Selected Technology, and shall be approved by plaintiff in its sole discretion. If plaintiff does not approve a purchaser of the Divestiture Assets under this Final Judgment, any grant by defendants of a license to that purchaser shall not satisfy the requirements of this Judgment.

D. Defendants warrant that they have the authority to convey all intellectual property included in the Divestiture Assets free and clear of any encumbrances, contractual commitments or obligations, except for the licenses granted to 3D and DTM which are identified in Appendix V annexed hereto.

E. To the extent that any rights to the RP Patents require defendants to sublicense rights from a third party to the Acquirer, such sublicense(s) must either be fully paid-up or granted on terms no less favorable than the terms applicable to defendants. Any sublicense granted pursuant to this Final Judgment must include provisions acceptable to plaintiff that will guard against the monitoring of the Acquirer's sales or production by defendants.

F. Nothing in this Final Judgment shall be construed to require the Acquirer, as a condition of any license granted by defendants pursuant to Sections IV(A) or (B), to extend to the defendants the right to use the Acquirer's improvements to any of the Divestiture Assets.

G. Defendants shall not assert against Acquirer any claims (1) for patent or copyright infringement in North America for products made, sold or used pursuant to the licenses granted in accordance with Section IV(A) and (B) of this Final Judgment; (2) for patent infringement in North America of the patents listed in Appendix V; or (3) that any equipment, systems, supplies, software, processes, or other technology sold by the Acquirer outside of North America prior to filing of this Final Judgment infringes in North America any patent or copyright issued or licensed to defendants in North America prior to the date of filing of this Final Judgment.

H. In accomplishing the divestiture ordered by this Final Judgment, defendants promptly shall make known, by usual and customary means, the availability of the Divestiture Assets. Defendants shall inform any eligible person making inquiry regarding a possible license or purchase of the Divestiture Assets that they are being divested pursuant to this Final Judgment and provide that person with a copy of this Final Judgment except those parts filed under seal. Defendants shall offer to furnish to all prospective Acquirers, subject to customary confidentiality assurances, all information and documents relating to the Divestiture Assets customarily provided in a due diligence process except such information or documents subject to the attorney-client or work-product privileges and except customer lists and information regarding patent applications. Defendants shall make available such information to the United States at the same time that such information is made available to any other person.

I. Defendants shall waive any non-compete clause(s) in any employment agreement(s), whether written or oral with any of defendants' present or former employees that are currently in effect, and shall not include non-compete clauses in any future employment agreements with respect to such present or former employees for a period of two (2) years from the date of filing of this Final Judgment. Defendants shall provide the Acquirer and the United States information relating to the personnel involved in the sales, marketing and manufacturing of RP Industrial Equipment in the Selected Technology to enable the Acquirer to make offers of employment, which does not preclude defendants from seeking to retain such personnel as employees. Defendants will not interfere with any negotiations by the Acquirer to employ any of defendants' present or former employees for a period of two (2) years from the date of filing of this Final Judgment.

J. Defendants shall permit prospective Acquirers of the Divestiture Assets to have reasonable access to personnel and to make inspections of the Divestiture Assets, other than customer lists or patent applications; access to any and all environmental, zoning, and other permit documents and information; and access to any and all financial, operational, or other documents and information customarily provided as part of a due diligence process.

K. Defendants shall warrant to the Acquirer of the Divestiture Assets that each tangible asset will be operational on the date of sale.

L. Defendants shall not take any action that will impede, jeopardize, or delay in any way the permitting, operation, or divestiture of any of the Divestiture Assets.

M. Defendants shall warrant to the Acquirer of the Divestiture Assets that there are no material defects in the environmental, zoning or other permits pertaining to the operation of any tangible asset, and that following the sale of the Divestiture Assets, defendants will not undertake, directly or indirectly, any challenges to the environmental, zoning, or other permits relating to the operation of any of the tangible Divestiture Assets.

N. Unless the United States otherwise consents in writing, the divestiture pursuant to Section IV, or by trustee appointed to Section V, of this Final Judgment, shall include the entire Divestiture Assets and shall be accomplished in such a way as to satisfy the United States, in its sole discretion, that the Divestiture Assets can and will be used by the Acquirer as part of a viable, ongoing commercial enterprise engaged in the sale of RP Industrial Equipment in North America, and that the divestiture will remedy the competitive harm alleged in the Complaint. The divestitures, whether pursuant to Section IV or Section V of this Final Judgment,

(1) Shall be made to an Acquirer that, in the United States' sole judgment, has the intent and capability (including the necessary managerial, operational, technical and financial capability) of competing effectively in the business of servicing and selling RP Industrial Equipment in the United States; and

(2) Shall be accomplished so as to satisfy the United States, in its sole discretion, that none of the terms of any agreement between an Acquirer and defendants give defendants the ability unreasonably to raise the Acquirer's costs, to lower the Acquirer's efficiency, or otherwise to interfere in the ability of the Acquirer to compete effectively.

V. Appointment of Sales Trustee

A. If defendants have not divested the Divestiture Assets within the time period specified in Section IV(A), defendants shall notify the United States of that fact in writing. Upon application of the United States, the Court shall appoint a trustee selected by the United States and approved by the Court to effect the divestiture of the Divestiture Assets.

B. After the appointment of a trustee becomes effective, only the trustee shall have the right to sell the Divestiture Assets. The trustee shall have the power and authority to accomplish the divestiture to an Acquirer acceptable to the United States at such price and on such terms as are then obtainable upon reasonable effort by the trustee, subject to the provisions of Sections IV, V, and VI of this Final Judgment, and shall have such other powers as this Court deems appropriate. Subject to Section V (D) of this Final Judgment, the trustee may hire at the cost and expense of defendants any investment bankers, attorneys, or other agents, who shall be solely accountable to the trustee, reasonably necessary in the trustee's judgment to assist in the divestiture.

C. Defendants shall not object to a sale by the trustee on any ground other than the trustee's malfeasance. Any such objections by defendants must be conveyed in writing to the United States and the trustee within ten (10) calendar days after the trustee has provided the notice required under Section VI.

D. The trustee shall serve at the cost and expense of defendants, on such terms and conditions as the plaintiff approves, and shall account for all monies derived from the sale of the assets sold by the trustee and all costs and expenses so incurred. After approval by the Court of the trustee's accounting, including fees for its services and those of any professionals and agents retained by the trustee, all remaining money shall be paid to defendants and the trust shall then be terminated. The compensation of the trustee and any professionals and agents retained by the trustee shall be reasonable in light of the value of the Divestiture Assets and based on a fee arrangement providing the trustee with an incentive based on the price and terms of the divestiture and the speed with which it is accomplished, but timeliness is paramount.

E. Defendants shall use their best efforts to assist the trustee in accomplishing the required divestiture. The trustee and any consultants, accountants, attorneys, and other persons retained by the trustee shall have full and complete access to the personnel, books, records, and facilities of the business to be divested, and defendants shall develop financial and other information relevant to such business as the trustee may reasonably request, subject to reasonable protection for trade secret or other confidential research, development, or commercial information, customer lists and information relating to patent applications. Defendants shall take no action to interfere with or to impede the trustee's accomplishment of the divestiture.

F. After its appointment, the trustee shall file monthly reports with the United States and the Court setting forth the trustee's efforts to accomplish the divestiture ordered under this Final Judgment. To the extent such reports contain information that the trustee deems confidential or that would be deemed confidential under Section V(E), such reports shall not be filed in the public docket of the Court. Such reports shall include the name, address, and telephone number of each person who, during the preceding month, made an offer to acquire, expressed an interest in acquiring, entered into negotiations to acquire, or was contracted or made an inquiry about acquiring, any interest in the Divestiture Assets, and shall describe in detail each contact with any such person. The trustee shall maintain full records of all efforts made to divest the Divestiture Assets.

G. If the trustee has not accomplished such divestiture within six months after its appointment, the trustee shall promptly file with the Court a report setting forth (1) the trustee's efforts to accomplish the required divestiture, (2) the reasons, in the trustee's judgment, why the require divestiture has not been accomplished, and (3) the trustee's recommendations. To the extent such reports contain information that the trustees deems confidential or that would be deemed confidential under Section V(E), such reports shall not be filed in the public docket of the Court. The trustee shall at the same time furnish such reports to the plaintiff who shall have the right to make additional recommendations consistent with the purpose of the trust. The Court thereafter shall enter such orders as it shall deem appropriate to carry out the purpose of the Final Judgment, which may, if necessary, include extending the trust and the term of the trustee's appointment by a period requested by the United States.

VI. Notice of Proposed Divestiture

A. Within two (2) business days following execution of a definitive divestiture agreement, defendants or the trustee, whichever is then responsible for effecting the divestiture required herein, shall notify the United States of any proposed divestiture required by Section IV or V of this Final Judgment. If the trustee is responsible, it shall similarly notify defendants. The notice shall set forth the details of the proposed divestiture and list the name, address, and telephone number of each person not previously identified who offered or expressed an interest in or desire to acquire any ownership interest in the Divestiture Assets, together with full details of the same.

B. Within fifteen (15) calendar days of receipt by the United States of such notice, the United States may request from defendants, the proposed Acquirer, any other third party, or the trustee if applicable, additional information concerning the proposed divestiture, the proposed Acquirer, and any other potential Acquirer. Defendants and the trustee shall furnish any additional information requested within fifteen (15) calendar days of the receipt of the request, unless the parties shall otherwise agree.

C. Within thirty (30) calendar days after receipt of the notice or within twenty (20) calendar days after the United States has been provided the additional information requested from defendants, the proposed Acquirer, any third party, and the trustee, whichever is later, the United States shall provide written notice to defendants and the trustee, if there is one, stating whether or not it objects to the proposed divestiture. If the United States provides written notice that it does not object, the divestiture may be consummated, subject only to defendants' limited right to object to the sale under Section V(C) of this Final Judgment. Absent written notice that the United States does not object to the proposed Acquirer or upon objection by the United States, a divestiture proposed under Section IV or Section V shall not be consummated. Upon objection by defendants under Section V(C), a divestiture proposed under Section V shall not be consummated unless approved by the Court.

VII. Financing

Defendants shall not finance all or any part of any purchase made pursuant to Section IV of V of this Final Judgment.

VIII. Preservation of Assets

Until the divestiture required by this Final Judgment has been accomplished:

A. Defendants shall provide sufficient working capital and lines and sources of credit to continue to maintain the Plant as an economically viable facility.

B. Defendants shall not, except as part of a divestiture approved by the United Stases, remove, sell, lease, assign, transfer, pledge or otherwise dispose of any of the Divestiture Assets.

C. Defendants shall take no action that would interfere with the ability of any trustee appointed pursuant to the Final Judgment to complete the divestiture to

an Acquirer acceptable to the United States.

IX. Affidavits

A. Within twenty (20) calendar days of the filing of the proposed Final Judgment in this matter, and every thirty (30) calendar days thereafter until the divestiture has been completed under Section IV or V, defendants shall deliver to the United States an affidavit as to the fact and manner of its compliance with Section IV or V of this Final Judgment. Each such affidavit shall include the name, address, and telephone number of each person who, during the preceding thirty days, made an offer to acquire, expressed an interest in acquiring, entered into negotiations to acquire, or was contacted or made an inquiry about acquiring, any interest in the Divestiture Assets, and shall describe in detail each contact with any such person during that period. Each such affidavit shall also include a description of the efforts defendants have taken to solicit buyers for the Divestiture Assets, and to provide required information to prospective purchasers, including the limitations, if any, on such information. Assuming the information set forth in the affidavit is true and complete, any objection by the United States to information provided by defendants, including limitation on information, shall be made within fourteen (14) days of receipt of such affidavit.

B. Within twenty (20) calendar days of the filing of the proposed Final Judgment in this matter, defendants shall deliver to the United States an affidavit that describes in reasonable detail all actions defendants have taken and all steps defendants have implemented on an ongoing basis to comply with Section VIII of this Final Judgment. Defendants shall deliver to the United States an affidavit describing any changes to the efforts and actions outlined in defendants' earlier affidavits filed pursuant to this section within fifteen (15) calendar days after the change is implemented.

C. Defendants shall keep all records of all efforts made to preserve and divest the Divestiture Assets until one year after such divestiture has been completed.

X. Compliance Inspection

A. For the purposes of determining or securing compliance with this Final Judgment, or of determining whether the Final Judgment should be modified or vacated, and subject to any legally recognized privilege, from time to time duly authorized representatives of the United States Department of Justice, including consultants and other persons retained by the United States, shall, upon written request of a duly authorized representative of the Assistant Attorney General in charge of the Antitrust Division, and on reasonable notice to defendants, be permitted:

(1) Access during defendants' office hours to inspect and copy, or at plaintiff's option, to require defendants to provide copies of, all books, ledgers, accounts, records and documents in the possession, custody, or control of defendants, relating to any matters contained in this Final Judgment; and

(2) To interview, either informally or on the record, defendants' officers, employees, or agents, who may have their individual counsel present, regarding such matters. The interviews shall be subject to the reasonable convenience of the interviewee and without restraint or interference by defendants.

B. Upon the written request of a duly authorized representative of the Assistant Attorney General in charge of the Antitrust Division, defendants shall submit written reports, under oath if requested, relating to any of the matters contained in this Final Judgment as may be requested.

C. No information or documents obtained by the means provided in this section or Section IX shall be divulged by the United States of any person other than an authorized representative of the executive branch of the United States, except as required by this Court, or in the course of legal proceedings to which the United States is a party (including grand jury proceedings), or for the purpose of securing compliance with this Final Judgment, or as otherwise required by law.

D. If at the time information or documents are furnished by defendants to the United States, defendants represent and identify in writing the material in any such information or documents to which a claim of protection may be asserted under Rule 26(c)(7) of the Federal Rules of Civil Procedure, and defendants mark each pertinent page of such material, ''Subject to claim of protection under Rule 26(c)(7) of the Federal Rules of Civil Procedure,'' then the United States shall give defendants ten (10) calendar days notice prior to divulging such material in any legal proceeding (other than a grand jury proceeding).

XI. No Reacquisition

Defendants may not reacquire any part of the Divestiture Assets during the term of this Final Judgment.

XII. Retention of Jurisdiction

This Court retains jurisdiction to enable any party to this Final Judgment to apply to this Court at any time for further orders and directions as may be necessary or appropriate to carry out or construe this Final Judgment, to modify any of its provisions, to enforce compliance, and to punish violations of its provisions.

XIII. Expiration of Final Judgment

Unless this Court grants an extension, this Final Judgment shall expire ten years from the date of its entry.

XIV. Public Interest Determination

Entry of this Final Judgment is in the public interest.

Court approval subject to procedures of Antitrust Procedures and Penalties Act, 15 U.S.C. 16.

Appendix I

UNITED STATES PATENTS ISSUED, ASSIGNED OR LICENSED TO 3D SYSTEMS

Patent No.	Patent title
4,469,654	EDM Electrodes.
4,491,558	Austenitic Manganese Steel-Containing Composite Article.
4,575,330	Apparatus for production of three-dimensional objects by stereolithography.
4,929,402	Method for production of three dimensional objects by stereolithography.
4,961,154	Three dimensional modelling apparatus.
4,996,010	Methods and apparatus for production of three-dimensional objects by stereolithography.
4,999,143	Methods and apparatus for production of three-dimensional objects by stereolithography.
5,015,424	Methods and apparatus for production of three-dimensional objects by stereolithography.
5,058,988	Apparatus and method for profiling a beam.
5,059,021	Apparatus and method for correcting for drift in production of objects by stereolithography.
5,059,359	Methods and apparatus for production of three-dimensional objects by stereolithography.

UNITED STATES PATENTS ISSUED, ASSIGNED OR LICENSED TO 3D SYSTEMS—Continued

Patent No.	Patent title
5,071,337	Apparatus for forming a solid three-dimensional object from a liquid medium.
5,076,974	Methods of curing partially polymerized parts.
5,096,530	Resin film recoating method and apparatus.
5,104,592	Method of and apparatus for production of three-dimensional objects by stereolithography with reduced curl.
5,123,734	Apparatus and method for calibrating and normalizing a stereolithography apparatus.
5,130,064	Method of making a three dimensional object by stereolithography.
5,137,662	Methods and apparatus for production of three-dimensional objects by stereolithography.
5,143,663	Stereolithography method and apparatus.
5,164,128	Methods for curing partially polymerized parts.
5,174,931	Method of and apparatus for making a three-dimensional product by stereolithography.
5,182,055	Method of making a three dimensional object by stereolithography.
5,182,056	Stereolithography method and apparatus employing various penetration depths.
5,182,715	Rapid and Accurate production of stereolithographic parts.
5,184,307	Method and apparatus for production of high resolution three-dimensional objects by stereolithography.
5,192,469	Simultaneous multiple layer curing in stereolithography.
5,192,559	Apparatus for building three-dimensional objects with sheets.
5,209,878	Surface resolution in three-dimensional objects by inclusion of thin fill layers.
5,234,636	Method of coating stereolithographic parts.
5,236,637	Method of and apparatus for production of three-dimensional objects by stereolithography.
5,238,639	Method and apparatus for stereolithographic curl balancing.
5,248,456	Method and apparatus for cleaning stereolithographically produced objects.
5,256,340	Method of making a three-dimensional object by stereolithography.
5,258,146	Method of and apparatus for measuring and controlling fluid level in stereolithography.
5,267,013	Apparatus and Method of profiling a beam.
5,273,691	Stereolithographic curl reduction.
5,321,622	Boolean layer comparison slice.
5,345,391	Method and apparatus for production of high resolution three-dimensional objects by stereolithography.
5,358,673	Applicator device and method for dispensing a liquid medium in a laser modeling machine.
5,447,822	Apparatus and related method for forming a substantially flat stereolithographic working surface.
5,460,758	Method and apparatus for production of a three-dimensional object.
5,481,470	Boolean layer comparison slice.
5,495,328	Apparatus and method for calibrating and normalizing a stereolithographic apparatus.
5,534,104	Method and apparatus for production of three-dimensional objects.
5,536,467	Method and apparatus for producing a three-dimensional object.
5,554,336	Method and apparatus for production of three-dimensional objects by stereolithography.
5,569,431	Method and apparatus for production of three-dimensional objects by stereolithography.
5,571,471	Method of production of three-dimensional objects by stereolithography.
5,573,722	Method and apparatus for production of three-dimensional objects by stereolithography.
5,582,876	Stereographic apparatus and method.
5,597,520	Simultaneous multiple layer curing in stereolithography.
5,609,812	Method of making a three-dimensional object by stereolithography.
5,609,813	Method of making a three-dimensional object by stereolithography.
5,610,824	Rapid and accurate production of stereolithographic parts.
5,630,981	Method for production of three-dimensional objects by stereolithography.
5,637,169	Method of building three-dimensional objects with sheets.
5,651,934	Recoating of stereolithographic layers.
5,665,401	Apparatus for producing an object using stereolithography.
5,667,820	Apparatus for making solid three-dimensional article from a liquid medium.
5,688,464	Vibrationally enhanced stereolithographic recoating.
5,693,144	Vibrationally enhanced stereolithographic recoating.
5,711,911	Methods and apparatus for making a three-dimensional object by stereolithography.
5,745,834	Free Form Fabrication of Metallic Components.
5,753,171	Method and apparatus for producing a three-dimensional object.
5,762,856	Method for production of three-dimensional objects by stereolithography.
5,772,947	Stereolithographic curl reduction.
5,779,967	Method and apparatus for production of three-dimensional objects by stereolithography.
5,785,918	Method and apparatus for production of three-dimensional objects by stereolithography.
5,814,265	Method and apparatus for production of three-dimensional objects by stereolithography.
5,832,415	Method and apparatus for calibrating a control apparatus for deflecting a laser beam.
5,840,239	Apparatus and method for forming three-dimensional objects in stereolithography utilizing a laser exposure system having a diode pumped frequency quadrupled solid state laser.
5,854,748	Boolean layer comparison slice.
5,855,718	Method and apparatus for making partially solidified three-dimensional objects on a layer-by-layer basis from a solidifiable medium.
5,870,307	Method and apparatus for production of high resolution three-dimensional objects by stereolithography.
5,885,511	Method of making a solid three-dimensional article from a liquid medium.
5,891,382	Recoating of stereolithographic layers.

UNITED STATES PATENTS ISSUED, ASSIGNED OR LICENSED TO 3D SYSTEMS—Continued

Patent No.	Patent title
5,897,825	Method for producing a three-dimensional object.
5,902,537	Rapid recoating of three-dimensional objects formed on a cross-sectional basis.
5,902,538	Simplified stereolithographic object formation methods of overcoming minimum recoating depth limitations.
5,904,89	Apparatus and method for producing an object using stereolithography.
5,932,055	Direct Metal fabrication Using a Carbon Precursor to Bind the ''Green Form'' Part and Catalyze a Eutectic Reducing Element in a Supersolidus Liquid Phase Sintering Process.
5,932,059	Method for producing a three-dimensional object.
5,940,890	Apparatus and method for producing three-dimensional objects.
5,945,058	Method and apparatus for identifying surface features associated with selected lamina of a three-dimensional object being stereographically formed.
5,965,079	Method and apparatus for making a three-dimensional object by stereolithography.
5,989,476	Process of making a molded refractory article.
5,999,184	Simultaneous multiple layer curing in stereolithography.
6,001,297	Method for controlling exposure of a solidifiable medium using a pulsed radiation source in building a three-dimensional object using stereolithography.
6,027,324	Apparatus for production of three-dimensional objects by stereolithography.
6,029,096	Method and apparatus for identifying surface features associated with selected lamina of a three-dimensional object being stereolithographically formed.
6,036,911	Method of making a three-dimensional object by stereolithography.
6,048,188	Stereolithographic curl reduction.
6,048,487	Recoating stereolithographic layers.
6,084,980	Method of and apparatus for deriving data intermediate to cross-sectional data descriptive of a three-dimensional object.
6,103,176	Stereolithographic method and apparatus for production of three dimensional objects using recoating parameters for groups of layers.
6,110,409	Rapid prototyping process and apparatus.
6,110,602	Method of making a three-dimensional object.
6,126,884	Stereolithographic method and apparatus with enhanced control of prescribed stimulation production and application.
6,129,884	Stereolithographic method and apparatus with enhanced control of prescribed stimulation production and application.
6,132,667	Stereolithographic method and apparatus with enhanced control of prescribed stimulation production and application.
6,153,142	Stereolithographic method and apparatus for production of three dimensional objects with enhanced control of the build environment.
6,157,663	Laser with optimized coupling of pump light to gain medium in a side-pumped geometry.
6,159,411	Rapid prototyping method and apparatus with simplified build preparation for production of three dimensional objects.
6,172,996	Apparatus and method for forming three-dimensional objects in stereolithography utilizing a laser exposure system with a diode pumped frequency-multiplied solid state laser.
6,179,601	Simplified stereolithographic object formation methods of overcoming minimum recoating depth limitations.
6,215,095	Apparatus and method for controlling exposure of a solidifiable medium using a pulsed radiation source in building a three-dimensional object using stereolithography.
6,224,816	Molding method, apparatus and device including use of powder metal technology for forming a molding tool with thermal control elements.
6,241,934	Stereolithographic method and apparatus with enhanced control of prescribed stimulation production and application.
6,261,077	Rapid prototyping apparatus with enhanced thermal and/or vibrational stability for production of three dimensional objects
6,261,506	Method of making a three dimensional object,
6,261.507	Method of and apparatus for making a three dimensional object by stereolithography.
6,264,873	Method of making a three-dimensional object by stereolithograph.

CANADIAN PATENTS ISSUED TO 3D SYSTEMS

Serial No.	Topic	Patent No.
596827	Curl Reduction	1339750
596825	Slice	1338521
596826	Beam Profiling	1334052
596838	Off-Peak Post Cure	1338954
596850	Stress Reliefs	1338628
596847	Supports	1339751
612990	Doctor Blade/Liquid Leveling	1337955
616962	Beam Profiling Div	1340501
617113	SL Beam Profiling	1341214
617087	SL Curl Reduction	1340890

MEXICAN PATENTS ISSUED TO 3D SYSTEMS

Serial No.	Topic	Patent No.
975844	Rapid Recoating	195669

UNITED STATES PATENTS ISSUED, ASSIGNED OR LICENSED TO DTM CORPORATION

Patent No.	Patent title
4,863,538	Method and apparatus for producing parts by selective sintering.
4,938,816	Selective laser sintering with assisted powder handling.
4,944,817	Multiple material systems for selective beam sintering.
5,017,753	Method and apparatus for producing parts by selective sintering (Deckard).
5,076,869	Multiple material systems for selective beam sintering.
5,132,143	Method for producing parts (Deckard).
5,147,587	Method of producing parts and molds using composite ceramic powders.
5,155,321	Radiant heating apparatus for providing uniform surface temperature useful in selective laser sintering.
5,156,697	Selective laser sintering of parts by compound formation of precursor powders.
5,252,264	Apparatus and method for producing parts with multi-directional powder delivery.
5,296,062	Multiple material systems for selective beam sintering.
5,304,329	Method of recovering recyclable unsintered powder from the part bed of selective laser sintering machine.
5,316,580	Method and apparatus for producing parts by selective sintering.
5,342,919	Sinterable Semi-Crystalline Powder and Near-Fully Dense Article Formed Therewith.
5,352,405	Thermal control of selective laser sintering via control of the laser scan.
5,382,308	Multiple material systems for selective beam sintering.
5,527,887	Sinterable semi-crystalline power and near-fully dense article formed therewith.
5,597,589	Apparatus for producing parts by selective sintering.
5,616,294	Method for producing parts by infiltration of porous intermediate parts.
5,639,070	Method for producing parts by selective sintering.
5,640,667	Laser-directed fabrication of full-density metal articles using hot isostatic processing.
5,648,450	Sinterable semi-crystalline powder and near-fully dense article formed therein.
5,733,497	Selective laser sintering with composite plastic material.
5,749,041	Method of forming three-dimensional articles using thermosetting materials.
5,817,206	Selective laser sintering of polymer powder of controlled particle size distribution.
5,990,268	Sinterable semi-crystalline powder and near fully dense article formed therewith.
6,085,122	End-of-vector laser power control in a selective laser sintering system.
6,136,948	Sinterable semi-crystalline powder and near-fully dense article formed therewith.
6,151,345	Laser power control with stretched initial pulses.

Appendix II

A. Filed Under Seal Pursuant to Court Order

Appendix II

B. Canadian Patents Applied for by 3D Systems

Serial No.	Topic
2072136	Skintinuous/Weave.
2095225	Layer Comparison.
2186613	SMLC/Quickcast.

Appendix III

3D SYSTEMS' UNITED STATES INKJET PATENTS

Patent No.	Title
4,992,806	Method of jetting phase change ink.
5,141,680	Thermal Stereolithography.
5,174,943	Method for production of three-dimensional objects by stereolithography.
5,313,232	Method of jetting phase change ink.
5,344,298	Apparatus for making three-dimensional objects by stereolithography.
5,501,824	Thermal stereolithography.
5,569,349	Thermal stereolithography.
5,672,312	Thermal stereolithography.
5,676,904	Thermal stereolithography.

3D SYSTEMS' UNITED STATES INKJET PATENTS—Continued

Patent No.	Title
5,695,707	Thermal stereolithography.
5,776,409	Thermal stereolithography using slice techniques.
5,855,836	Method for selective deposition modeling.
5,943,235	Rapid prototyping system and method with support region data processing.
5,997,291	Hot-melt material for heating plate.
6,027,682	Thermal stereolithograph using slice techniques.
6,132,665	Compositions and methods for selective deposition modeling.
6,133,353	Phase change solid imaging material.
6,133,355	Selective deposition modeling materials and method.
6,136,252	Apparatus for electro-chemical deposition with thermal anneal chamber.
6,162,378	Method and apparatus for variably controlling the temperature in a selective deposition modeling environment.
6,193,923	Selective deposition modeling method and apparatus for forming three-dimensional objects and supports.
6,270,335	Selective Deposition Modeling Method and Apparatus for Forming Three-Dimensional Objects and Supports.
Des. 420,371	Rapid prototype machine.
Des. 422,609	Container for material loading.
Des. 423,023	Rapid prototype machine.

Appendix IV

Filed Under Seal Pursuant to Court Order

Appendix V

PATENTS LICENSED TO 3D SYSTEMS WITH NO RIGHT TO SUBLICENSE

Patent No.	Assignee
4,704,503	Patlex Corporation.
4,746,201	Patlex Corporation.
5,253,177	NTT Data/CMET Inc.
5,415,820	NTT Data/CMET Inc.

PATENTS LICENSED TO DTM CORPORATION WITH NO RIGHT TO SUBLICENSE

Patent No.	Assignee
5,745,834	Rockwell Science.
5,932,055	Rockwell Science.

In The United States District Court for the District of Columbia

[Civil No.: 1:01CV01237 (GK)]

United States of America, Plaintiff, v. 3D Systems Corporation and DTM Corporation, Defendants

Competitive Impact Statement

The United States, pursuant to Section 2(b) of the Antitrust Procedures and Penalties Act (''APPA''), 15 U.S.C. 16(b)–(h), files this Competitive Impact Statement relating to the proposed Final Judgment submitted for entry in this civil antitrust proceeding.

I. Nature and Purpose of the Proceeding

The United States filed a civil antitrust Complaint on June 6, 2001, alleging that the proposed acquisition of DTM Corporation (''DTM'') by 3D Systems Corporation (''3D'') would substantially lessen competition in violation of Section 7 of the Clayton Act, 15 U.S.C. 18.

The Complaint alleges that 3D and DTM are two of only three firms that produce industrial rapid prototyping (''RP'') systems in the United States. Both 3D and DTM hold extensive patent portfolio related to RP systems production. These patents have limited the number of firms in the U.S. market by preventing firms that sell RP systems abroad from competing in the United States. The Complaint alleges that the transaction will substantially lessen competition in the development, production and sale of industrial RP systems sold in the United States, thereby harming consumers. Accordingly, the Complaint asks the Court to issue (1) a judgment that the proposed acquisition of DTM by 3D would violate of Section 7 of the Clayton Act, 15 U.S.C. 18; and (2) permanent injunctive relief that would prevent defendants from carrying out the acquisition or otherwise combining their operations.

After this suit was filed, the United States and defendants reached a proposed settlement that permits 3D to complete its acquisition of DTM, while preserving competition in the market for industrial RP systems by requiring defendants to license their RP-related patent portfolios. A Stipulation and proposed Final Judgment embodying the settlement were filed with the Court on August 17, 2001.

The proposed Final Judgment orders 3D and DTM to grant a license to develop manufacture and sell, and to supply any support or maintenance services for, products under the defendants' RP patent portfolios within a limited field of use matching either 3D's or DTM's technology. The licensee, to be approved by the United States, must be a firm that currently manufacturers industrial RP systems. The defendants must complete the divestiture within one hundred twenty (120) calendar days after the filing of the proposed Final Judgment, or five (5) days after notice of entry of the Final Judgment by the Court, whichever is later. The United States may extend the time period for divestiture for up to sixty (60) days. If the defendants do not complete the divestiture within the prescribed period, the Court will appoint a trustee to achieve the divestiture.

The United States and the defendants have stipulated that the proposed Final Judgment may be entered after compliance with the APPA. Entry of the proposed Final Judgment would terminate this action, except that the Court would retain jurisdiction to construe, modify, or enforce the provisions of the proposed Final Judgment, and to punish violations thereof.

II. Description of the Events Giving Rise to the Alleged Violation of the Antitrust Laws

A. The Defendants

Defendant 3D is a Delaware corporation with its principal place of business in Valencia, California. 3D is a manufacturer and supplier of RP systems and related equipment, proprietary materials used in RP systems, and associated services. For the year ending December 31, 2000, 3D reported sales of $110 million.

Defendant DTM is a Texas Corporation with its principal place of business in Austin, Texas. DTM designs, manufactures, markets and supports RP systems and related materials used in RP systems. For the year ending December 31, 2000, DTM reported sales of $40 million.

B. The Proposed Acquisition

On April 2, 2001, 3D and DTM entered into an agreement and plan of merger, pursuant to which 3D intended to acquire DTM in a cash tender offer. The defendants valued the transaction at an estimated $45 million. This proposed transaction, which would have reduced the number of competitors in the U.S. industrial RP systems market from three to two, precipitated the United States' antitrust suit on June 6, 2001. Following the filing of the suit, the defendants postponed closing the proposed transaction pending the outcome of settlement negotiations. On August 16, 2001, the Stipulation and proposed Final Judgment to resolve the suit were filed with the Court.

C. The Competitive Effects of the Acquisition

1. Industrial RP Systems. Rapid prototyping is a process by which a machine transforms a computer design into a three-dimensional prototype or model. Rapid prototyping is significantly faster and less expensive than traditional methods of creating a prototype, such as machining, milling or grinding. Competing technologies are used in industrial RP systems to create prototypes. Stereolithography (''SL'') technology, utilized by 3D, forms a three-dimensional object through radiation from a liquid, photocurable material. DTM's RP systems use laser sintering (''LS'') technology to heat and form a sinterable powder into a three-dimensional form.

There are two types of RP systems: industrial and professional. Industrial RP systems are large, cost hundreds of thousands of dollars and are able to create functional prototypes, tooling inserts, and low volume production quantities of parts. Professional RP systems are smaller and less expensive, use ''inkjet'' printing technology, and are geared toward the creation of concept models in an office setting. Sales of industrial RP systems and associated materials represent the largest and most profitable segment of the U.S. RP industry, accounting for approximately 85% of the total RP-related sales last year. Because of limited capabilities, professional RP systems are not good substitutes for industrial RP systems.

There is a broad range of uses for the technology employed in an industrial RP system. Industrial RP systems can be used to create prototypes, running the gamut from a non-functional model of a hand-held calculator, used for visual inspection in early design phases, to a sophisticated exhaust manifold for an automobile, which can be bolted in place and tested. The Complaint alleges that the development, manufacture and sale of industrial RP systems is a line of commerce or relevant product market within the meaning of Section 7 of the Clayton Act. In other words, in the event of a small but significant increase in the price of industrial RP systems, customers would not switch to less capable professional RP systems or to traditional technologies, such as machining, milling or grinding.

The Complaint alleges that the relevant geographic market within the meaning of Section 7 of the Clayton Act is the United States. There are no imports of industrial RP systems into the United States. Although there are producers of industrial RP systems in other countries, such as Japan and Germany, patents that cover the technology owned by 3D and DTM have prevented importation and sale in the United States. Accordingly, U.S. customers are unable to turn to foreign producers of industrial RP systems. Therefore, a small but significant price increase of industrial RP systems would not cause any purchasers to switch to industrial RP systems manufactured outside the United States, let alone a sufficient number to make the price increase unprofitable.

2. Anticompetitive Consequences of the Proposed Transaction. 3D and DTM are two of only three suppliers of industrial RP systems in the United States. In this highly concentrated market, 3D has approximately a 60% market share and DTM has approximately a 20% market share. Currently, 3D and DTM offer the most sophisticated systems in the industry and compete directly against each other in the development, manufacture and sale of industrial RP systems. Competition for innovations and improvements is evidenced by the many RP-related patents obtained by the defendants. This competition has been the driving force behind the development of innovative industrial RP system technology, which has enabled the industry to develop a less costly method of creating prototypes.

The proposed acquisition would substantially increase concentration in an already highly concentrated market. The proposed acquisition would raise the combined firm's share of industry sales to the level where it would have the ability profitably to raise prices. 3D and DTM's customers would not switch to the one remaining industrial RP systems producer in sufficient numbers to make unprofitable a significant price increase imposed by the combined firm.

Entry into the industrial RP systems market is difficult, time consuming, and expensive and would not deter the exercise of market power caused by 3D's acquisition of DTM. It would take well over two years, and substantial costs, for a new entrant to create the sophisticated and advanced technological capabilities needed to develop and manufacture industrial RP systems.

3D and DTM each hold an extensive array of patents to the prevailing technology used in industrial RP systems. The patent positions of 3D and DTM prevent other industrial RP systems producers from competing in the United States. In combination, the acquisition would enhance 3D's already strong patent portfolio.

The competition between 3D and DTM has benefitted users of industrial RP systems through lower prices for systems, lower prices for materials, and improved products. For these reasons, the United States concluded that 3D's acquisition of DTM, as originally structured, would substantially lessen competition in the development, manufacture and sale of industrial RP systems in violation of Section 7 of the Clayton Act.

III. Explanation of the Proposed Final Judgment

The proposed Final Judgment is designed to ensure that competition that would have otherwise been eliminated as a result of the proposed acquisition will be preserved. To maintain competition in the industrial RP systems market, the proposed Final Judgment lifts the patent entry barriers for a firm that is currently prevented from selling its industrial RP systems in the United States. Licensing an acquirer that currently manufactures industrial RP systems and enabling it to compete in the U.S. market will restore the competition that would otherwise be lost by reason of the merger of 3D and DTM. Outside of the United States, defendants face vigorous competition from companies such as Electro Optical Systems, based in Germany, and Teijin Seiki, based in Japan. Under the proposed Final Judgment, defendants must grant a license to one such firm so that it will be able to compete in the U.S. market. Thus, after the merger, there will still be three competitors in the U.S. market for industrial RP systems.

Specifically, the proposed Final Judgment requires defendants to grant the acquirer a perpetual, assignable, transferable, non-exclusive license to develop, test, product, market, sell, or distribute, and to supply any support or maintenance services for, products under both firms' RP patent portfolios. Defendants must license both 3D's and DTM's full industrial RP-related patent portfolios to ensure that the acquirer has the full range of necessary technology to produce and sell RP systems in the United States. This license will be limited to a specific field of RP technology to match the RP technology employed by the acquirer. The proposed Final Judgment also requires defendants to provide the acquirer with a list of all North American purchasers that utilize the acquirer's technology and field of use under the license. In addition, the acquirer will have the option to purchase DTM's assembly plant, located in Austin, Texas.

Under the proposed Final Judgment, defendants must provide the acquirer with all software copyright licenses needed to purchase and resell both defendants' used industrial RP systems in North America. The acquirer will therefore be able to offer to take the defendants' systems as ''trade-ins'' on its own equipment, and then resell defendants' systems as used equipment.

The proposed Final Judgment bars the defendants from asserting against the acquirer any claims for patent or copyright infringement in North America for products under the licenses granted, or any claims that any equipment, systems, supplies, software, processes or other technology currently sold by the acquirer outside of North America infringe any of defendants' patents or copyrights in North America. These provisions ensure that the acquirer will be able to import its current RP systems into the U.S. market, without the threat of patent or copyright litigation from the defendants.

In order to ensure a capable competitor, defendants must license their RP patents portfolios to a company that currently manufactures RP systems. The divestiture required by the proposed Final Judgment must be to an acquirer acceptable to the United States in its sole discretion. Specifically, in the United States' sole judgment, the acquirer must have the intent and capability of competing effectively in the business of servicing and selling industrial RP systems in the United States.

The defendants must use their best efforts to complete the divestiture required by the proposed Final Judgment as expeditiously as possible. Unless the United States grants an extension of time, the divestiture must be completed within one hundred twenty (120) calendar days after the filing of the proposed Final Judgment, or five (5) days after notice of entry of the Final Judgment by the Court, whichever is later. If the defendants fail to accomplish the divestiture within this time period, then the proposed Final Judgment calls for the Court, upon the United States' application, to appoint a trustee nominated by the United States to effect the divestiture. If a trustee is appointed, the defendants are to cooperate fully with the trustee and pay all costs and expenses of the trustee and any persons retained by the trustee. The compensation paid to the trustee and any persons retained by the trustee shall be both reasonable in light of the value of the divestiture assets, and based on a fee arrangement providing the trustee with an incentive based on the price and terms of the divestiture and the speed with which it is accomplished. After appointment, the trustee will file monthly reports with the United States, defendants and the Court, setting forth the trustee's efforts to accomplish the divestiture ordered under the proposed Final Judgment. If the trustee has not accomplished the divestiture within six (6) months after its appointment, the trustee shall promptly file with the Court a report setting forth (1) the trustee's efforts to accomplish the required divestiture, (2) the reasons, in the trustee's judgment, why the required divestiture has not been accomplished, and (3) the trustee's recommendations. At the same time the trustee will furnish this report to the United States and defendants, who will each have the right to be heard and to make additional recommendations.

IV. Remedies Available to Potential Private Litigants

Section 4 of the Clayton Act, 15 U.S.C. 15, provides that any person who has been injured as a result of conduct prohibited by the antitrust laws may bring suit in federal district court to recover three times the damages the person has suffered, as well as the costs of bringing a lawsuit and reasonable attorneys' fees. Entry of the proposed Final Judgment will neither impair nor assist the bringing of any private antitrust damage action. Under the provisions of Section 5(a) of the Clayton Act, 15 U.S.C. 16(a), the proposed Final Judgment has no effect as prima facie evidence in any subsequent private lawsuit that may be brought against defendants.

V. Procedures Available for Modification of the Proposed Final Judgment

The United States and the defendants have stipulated that the proposed Final Judgment may be entered by this Court after compliance with the provisions of the APPA, provided that the United States has not withdrawn its consent. The APPA conditions entry of the decree upon this Court's determination that the proposed Final Judgment is in the public interest.

The APPA provides a period of at least sixty (60) days preceding the effective date of the proposed Final Judgment within which any person may submit to the United States written comments regarding the proposed Final Judgment. Any person who wishes to comment should do so within sixty (60) days of the date of publication of this Competitive Impact Statement in the **Federal Register**. The United States will evaluate and respond to the comments. All comments will be given due consideration by the Department of Justice, which remains free to withdraw its consent to the proposed Final Judgment at any time prior to entry. The comments and the response of the United States will be filed with this Court and published in the **Federal Register**. Written comments should be submitted to: J. Robert Kramer, II, Chief, Litigation II Section, Antitrust Division, United States Department of Justice, 1401 H Street, NW., Suite 3000, Washington, DC 20530.

The proposed Final Judgment provides that this Court retains jurisdiction over this action, and the parties may apply to this Court for any order necessary or appropriate for the modification, interpretation, or enforcement of the Final Judgment.

VI. Alternatives to the Proposed Final Judgment

The United States considered, as an alternative to the proposed Final Judgment, a full trial on the merits against defendants. The United States is satisfied, however, that the removal of existing patent entry barriers through the required license to allow a firm that currently manufactures industrial RP systems to compete in the U.S. market, and other relief contained in the proposed Final Judgment, will establish, preserve and ensure a viable competitor in the development, manufacture and sale of industrial RP systems. Thus, the United States is convinced that the proposed Final Judgment, once implemented by the Court, will prevent 3D's acquisition of DTM from having adverse competitive effects.

VII. Standard of Review Under the APPA for Proposed Final Judgment

The APPA requires that proposed consent judgments in antitrust cases brought by the United States be subject to a sixty (60) day comment period, after which the court shall determine whether entry of the proposed Final Judgment is ''in the public interest.'' In making that determination, the court may consider—

(1) the competitive impact of such judgment, including termination of alleged violations, provisions for enforcement and modification, duration or relief sought, anticipated effects of alternative remedies actually considered, and any other considerations bearing upon the adequacy of such judgment;

(2) the impact of entry of such judgment upon the public generally and individuals alleging specific injury from the violations set forth in the complaint including consideration of the public benefit, if any, to be derived from a determination of the issues at trial.

15 U.S.C. 16(e) (emphasis added). As the Court of Appeals for the District of Columbia has held, the APPA permits a court to consider, among other things, the relationship between the remedy secured and the specific allegations set forth in the government's complaint, whether the decree is sufficiently clear, whether enforcement mechanisms are sufficient, and whether the decree may positively harm third parties. *See United States* v. *Microsoft Corp.,* 56 F.3d 1448, 1458–62 (D.C. Cir. 1995).

In conducting this inquiry, ''the Court is nowhere compelled to go to trial or to engage in extended proceedings which might have the effect of vitiating the benefits of prompt and less costly settlement through the consent decree process.'' [1] Rather,

absent a showing of corrupt failure of the government to discharge its duty, the Court, in making its public interest finding, should * * * carefully consider the explanations of the government in the competitive impact statement and its responses to comments in order to determine whether those explanations are reasonable under the circumstances.[2]

Accordingly, with respect to the adequacy of the relief secured by the decree, a court may not ''engage in an unrestricted evaluation of what relief would best serve the public.'' *United States* v. *BNS, Inc.,* 858 F.2d 456, 462–63 (9th Cir. 1988), quoting *United States* v. *Bechtel Corp.,* 648 F.2d 660, 666 (9th Cir.), cert. denied, 454 U.S. 1083 (1981); see also Microsoft, 56 F.3d at 1458. Precedent requires that

[t]he balancing of competing social and political interest affected by a proposed antitrust consent decree must be left, in the first instance, to the discretion of the Attorney General. The court's role in protecting the public interest is one of insuring that the government has not breached its duty to the public in consenting tot he decree. The court is required to determine not whether a particular decree is the one that will best serve society, but whether the settlement is ''within the reaches of the public interest.'' More elaborate requirements might undermine the effectiveness of antitrust enforcement by consent decree.[3]

The proposed Final Judgment, therefore, should not be reviewed under a standard of whether it is certain to eliminate every anticompetitive effect of a particular practice or whether it mandates certainty of free competition in the future. Court approval of a final judgment requires a standard more flexible and less strict than the standard required for a finding of liability. A ''proposed decree must be approved even if it falls short of the remedy the court would impose on its own, as long as it falls within the range of acceptability or is 'within the reaches of public interest.' '' [4]

Moreover, the court's role under the APPA is limited to reviewing the remedy in relationship to the violations that the United States alleges in its Complaint, and does not authorize the court to ''construct [its] own hypothetical case and then the decree against that case.'' Microsoft, 56 F.3d at 1459. Because the ''court's authority to review the decree depends entirely on the government's exercising its prosecutorial discretion by bringing a case in the first place,'' it follows that the court ''is only authorized to review the decree itself,'' and not to ''effectively redraft the complaint'' to inquire into other matters that the United States might have but did not pursue. Id.

VIII. Determinative Documents

There are no determinative materials or documents within the meaning of the APPA that were considered by the United States in formulating the proposed Final Judgment.

Dated: September 4, 2001. Washington DC.

Respectfully submitted,

Dando B. Cellini,

Stephen A. Harris,

U.S. Department of Justice, Antitrust Division, Litigation II Section, 1401 H Street, NW, Suite 3000, Washington, DC 20530, 202–307–0729.

Certificate of Service

I hereby certify that I caused a copy of the foregoing Competitive Impact Statement to be served on all parties to this proceeding, by facsimile transmission or by mail, on this 4th day of September 2001.

Stephen A. Harris,

[FR Doc. 01–23999 Filed 9–25–01; 8:45 am]

BILLING CODE 4410–11–M

[1] 119 Cong. Rec. 24,598 (1973). *See United States* v. *Gillette Co.,* 406 F. Supp. 713, 715 (D. Mass. 1975). A ''public interest'' determination can be made properly on the basis of the Competitive Impact Statement and Response to Comments filed pursuant to the APPA. Although the APPA authorizes the use of additional procedures, those procedures are discretionary (15 U.S.C. 16(f)). A court need not invoke any of them unless it believes that the comments have raised significant issues and that further proceedings would aid the court in resolving those issues. See H.R. Rep. No. 93–1463, 93rd Cong. 2d Sess. 8–9 (1974), reprinted in 1974 U.S.C.C.A.N. 6535, 6538.

[2] *United States* v. *Mid-America Dairymen, Inc.,* 1977–1 Trade Cas. (CCH) ¶ 61,508, at 71,980 (W.D. Mo. 1977); *see also United States* v. *Loew's Inc.,* 783 F. Supp. 21, 214 (S.D.N.Y. 1992); *United States* v. *Columbia Artists Mgmt., Inc.,* 662 F. Supp. 865, 870 (S.D.N.Y. 1987).

[3] *United States* v. *Bechtel Corp.,* 648 F.2d at 666 (citations omitted) (emphasis added); *see United States* v. *BNS, Inc.,* 858 F.2d at 463; *United States* v. *National Broadcasting Co.,* 449 F. Supp. 1127, 1143 (C.D. Cal. 1978); *United States* v. *Gillette Co.,* 406 F. Supp. at 716. *See also United States* v. *American Cyanamid Co.,* 719 F.2d 558, 565 (2d Cir. 1983), cert. denied, 465 U.S. 1101 (1984).

[4] *United States* v. *American Tel. & Tel. Co.,* 552 F. Supp. 131, 151 (D.D.C. 1982) (quoting Gillette, 406 F. Supp. at 716), aff'd sub nom. *Maryland* v. *United States,* 460 U.S. 1001 (1983); *United States* v. *Alcan Aluminum, Ltd.,* 605 F. Supp. 619, 622 (W.D. Ky. 1985); *United States* v. *Carrols Dev.* Corp., 454 F. Supp. 1215, 1222 (N.D.N.Y. 1978).

DEPARTMENT OF LABOR

Occupational Safety and Health Administration

[Docket No. NRTL1–88]

MET Laboratories, Inc., Expansion of Recognition

AGENCY: Occupational Safety and Health Administration (OSHA), Labor.

ACTION: Notice.

SUMMARY: This notice announces the Agency's final decision on the application of MET Laboratories, Inc., for expansion of its recognition as a Nationally Recognized Testing Laboratory (NRTL). MET's expansion covers the use of additional standards.

EFFECTIVE DATE: The expansion becomes effective on September 26, 2001 and continues in effect while OSHA recognizes MET as an NRTL under 29 CFR 1910.7.

FOR FURTHER INFORMATION CONTACT: Bernard Pasquet, Office of Technical Programs and Coordination Activities, NRTL Program, Occupational Safety and Health Administration, U.S. Department of Labor, 200 Constitution Avenue,

NW., Room N3653, Washington, DC 20210, or phone (202) 693–2110.

SUPPLEMENTARY INFORMATION:

Notice of Final Decision

The Occupational Safety and Health Administration (OSHA) hereby gives notice of the expansion of recognition of MET Laboratories, Inc., (MET) as a Nationally Recognized Testing Laboratory (NRTL). MET's expansion covers the use of additional test standards. The NRTL's current scope of recognition may be found in OSHA's informational web page for the NRTL (http://www.osha-slc.gov/dts/otpca/nrtl/met.html).

OSHA recognition of an NRTL signifies that the organization has met the legal requirements in § 1910.7 of Title 29, Code of Federal Regulations (29 CFR 1910.7). Recognition is an acknowledgment that the organization can perform independent safety testing and certification of the specific products covered within its scope of recognition and is not a delegation or grant of government authority. As a result of recognition, employers may use products ''properly certified'' by the NRTL to meet OSHA standards that require testing and certification.

The Agency processes applications by an NRTL for initial recognition or for expansion or renewal of this recognition following requirements in Appendix A to 29 CFR 1910.7. This appendix requires that the Agency publish two notices in the **Federal Register** in processing an application. In the first notice, OSHA announces the application and provides its preliminary finding and, in the second notice, the Agency provides its final decision on the application. These notices set forth the NRTL's scope of recognition or modifications of that scope.

MET submitted a request, dated January 16, 2001 (see Exhibit 24), to expand its recognition as an NRTL to include 32 additional test standards. OSHA published the required notice in the **Federal Register** on July 11, 2001 (66 FR 36333), to announce MET's expansion request. This notice included a preliminary finding that MET could meet the requirements in 29 CFR 1910.7 for expansion of its recognition and invited public comment by July 26, 2001. OSHA received no comments concerning this notice.

In processing this request, OSHA did not perform an on-site review of MET's NRTL testing facilities. However, NRTL Program assessment staff reviewed information pertinent to the request and, in a memo dated February 28, 2001 (see Exhibit 25), recommended the expansion of MET's recognition to include the additional test standards listed below.

The most recent notices published by OSHA for MET's recognition, prior to the July 11 preliminary notice, covered an expansion of recognition, which OSHA announced on November 10, 1998 (63 FR 63085), and granted on March 9, 1999 (64 FR 11502).

You may obtain or review copies of all public documents pertaining to the MET application by contacting the Docket Office, Occupational Safety and Health Administration, U.S. Department of Labor, 200 Constitution Avenue, NW., Room N2625, Washington, DC 20210. You should refer to Docket No. NRTL1–88, the permanent record of public information on the MET recognition.

The current address of the MET testing facilities already recognized by OSHA is: MET Laboratories, Inc., 914 West Patapsco Avenue, Baltimore, Maryland 21230.

Final Decision and Order

The NRTL Program staff has examined the application, the assessor's memo, and other pertinent information. Based upon this examination and the assessor's recommendation, OSHA finds that MET Laboratories, Inc., has met the requirements of 29 CFR 1910.7 for expansion of its NRTL recognition. The expansion covers the test standards listed below, and it is subject to the limitations and conditions, also listed below. Pursuant to the authority in 29 CFR 1910.7, OSHA hereby expands the recognition of MET, subject to these limitations and conditions.

Limitations

OSHA limits the expansion of recognition of MET to testing and certification of products for demonstration of conformance to the following 32 additional test standards. OSHA has determined that each standard meets the requirements for an appropriate test standard, within the meaning of 29 CFR 1910.7(c). The NRTL Program staff makes such determinations in processing applications from any NRTL.

UL 45 Portable Electric Tools
UL 506 Specialty Transformers
UL 745–1 Portable Electric Tools
UL 745–2–1 Particular Requirements of Drills
UL 745–2–2 Particular Requirements for Screwdrivers and Impact Wrenches
UL 745–2–3 Particular Requirements for Grinders, Polishers, and Disk-Type Sanders
UL 745–2–4 Particular Requirements for Sanders
UL 745–2–5 Particular Requirements for Circular Saws and Circular Knives
UL 745–2–6 Particular Requirements for Hammers
UL 745–2–8 Particular Requirements for Shears and Nibblers
UL 745–2–9 Particular Requirements for Tappers
UL 745–2–11 Particular Requirements for Reciprocating Saws
UL 745–2–12 Particular Requirements for Concrete Vibrators
UL 745–2–14 Particular Requirements for Planers
UL 745–2–17 Particular Requirements for Routers and Trimmers
UL 745–2–30 Particular Requirements for Staplers
UL 745–2–31 Particular Requirements for Diamond Core Drills
UL 745–2–32 Particular Requirements for Magnetic Drill Presses
UL 745–2–33 Particular Requirements for Portable Bandsaws
UL 745–2–34 Particular Requirements for Strapping Tools
UL 745–2–35 Particular Requirements for Drain Cleaners
UL 745–2–36 Particular Requirements for Hand Motor Tools
UL 745–2–37 Particular Requirements for Plate Jointers
UL 935 Fluorescent-Lamp Ballasts
UL 1026 Electric Household Cooking and Food Serving Appliances
UL 1028 Hair Clipping and Shaving Appliances
UL 1083 Household Electric Skillets and Frying-Type Appliances
UL 1236 Battery Chargers for Charging Engine-Starter Batteries
UL 1431 Personal Hygiene and Health Care Appliances
UL 1585 Class 2 and Class 3 Transformers
UL 1786 Nightlights
UL 1993 Self-Ballasted Lamps and Lamp Adapters

The designations and titles of the above test standards were current at the time of the preparation of the notice of the preliminary finding.

Many of the test standards listed above are approved as American National Standards by the American National Standards Institute (ANSI). However, for convenience in compiling the list, we show the designation of the standards developing organization (e.g., UL 1028) for the standard, as opposed to the ANSI designation (e.g., ANSI/UL 1028). Under our procedures, an NRTL recognized for an ANSI-approved test standard may use either the latest proprietary version of the test standard or the latest ANSI version of that standard, regardless of which version appears in the list of test

standards found in OSHA's informational web page for the NRTL. Contact ANSI or the ANSI web site (*www.ansi.org*) and click ''NSSN'' to find out whether or not a standard is currently ANSI-approved.

Conditions

MET Laboratories, Inc., must also abide by the following conditions of the recognition, in addition to those already required by 29 CFR 1910.7:

OSHA must be allowed access to the MET facility and records for purposes of ascertaining continuing compliance with the terms of its recognition and to investigate as OSHA deems necessary;

If MET has reason to doubt the efficacy of any test standard it is using under this program, it must promptly inform the organization that developed the test standard of this fact and provide that organization with appropriate relevant information upon which its concerns are based;

MET must not engage in or permit others to engage in any misrepresentation of the scope or conditions of its recognition. As part of this condition, MET agrees that it will allow no representation that it is either a recognized or an accredited Nationally Recognized Testing Laboratory (NRTL) without clearly indicating the specific equipment or material to which this recognition is tied, or that its recognition is limited to certain products;

MET must inform OSHA as soon as possible, in writing, of any change of ownership, facilities, or key personnel, and of any major changes in its operations as an NRTL, including details;

MET will continue to meet all the terms of its recognition and will always comply with all OSHA policies pertaining to this recognition; and

MET will continue to meet the requirements for recognition in all areas where it has been recognized.

Signed at Washington, DC this 18th day of September, 2001.

John L. Henshaw,

Assistant Secretary.

[FR Doc. 01–24026 Filed 9–25–01; 8:45 am]

BILLING CODE 4510–26–P

MERIT SYSTEMS PROTECTION BOARD

Variation From Normal Procedures—Effects of Attacks on World Trade Center and Pentagon

AGENCY: Merit Systems Protection Board.

ACTION: Notice.

SUMMARY: Notice is hereby given of variations from the Board's normal case processing procedures as a result of the September 11, 2001, attacks on the World Trade Center in New York and the Pentagon.

DATES: September 26, 2001.

FOR FURTHER INFORMATION CONTACT: Robert E. Taylor, Clerk of the Board, 1615 M Street, NW., Washington, DC 20419; telephone (202) 653–7200; facsimile (202) 653–7130; e-mail to mspb@mspb.gov.

SUPPLEMENTARY INFORMATION: The Merit Systems Protection Board is providing notice of the variations in its normal case processing procedures that have been placed into effect as a result of the September 11, 2001, attacks on the World Trade Center in New York and the Pentagon.

The Board's adjudicatory regulations contain numerous time limits for filing documents in Federal employee appeals of agency personnel actions and other matters within the Board's jurisdiction. In addition, MSPB judges issue various orders in the course of an adjudicatory proceeding that set a time limit for responses by the parties. The Board's regulations permit four methods of filing and serving documents—regular mail, commercial overnight delivery, facsimile, and personal delivery to the appropriate MSPB office. The date of filing by regular mail is determined by the postmark date. For filing by commercial overnight delivery, it is the date the document is delivered to the commercial overnight delivery service. For filing by facsimile, it is the date recorded on the facsimile transmission. For filing by personal delivery, it is the date the MSPB office receives the document.

At the time of the attacks on September 11, 2001, there were approximately 1,800 cases pending in MSPB regional and field offices and almost 800 cases pending at the Board's headquarters in Washington (data as of August 31, 2001). It is reasonable to assume, therefore, that a number of filings due to a MSPB office on September 11, 2001, could not be made on that date. An unknown number of filings of new cases subject to a filing deadline of September 11, 2001, also may have been affected by the events of that date.

The following circumstances may have affected filings due on September 11, 2001:

- The Board's New York Field Office, located in the vicinity of the World Trade Center, was evacuated following the attack there and remains closed until further notice.
- The Board's Washington, DC, headquarters office and its Washington Regional Office in Alexandria, Virginia, closed shortly after the attack on the Pentagon.
- Other MSPB regional and field offices throughout the country closed early on September 11, 2001.
- U.S. post offices closed throughout the country following the attacks, and many scheduled mail pickups on September 11, 2001, were not made. Certain scheduled mail pickups on September 12, 2001, also may not have been made.
- Facsimile transmissions to the New York Field Office could not be received because of communications failures in the area.
- Facsimile transmissions to the Board's headquarters may have been unable to get through because of the overload of telephone circuits in the Washington, DC, area.

In addition to the effect of the attacks on the ability of parties to make timely filings that were due on September 11, 2001, MSPB case files of Federal agencies located in the World Trade Center were destroyed in the attacks. Case files in the Pentagon may have been destroyed as well.

Accordingly, the Board has placed into effect the following variations from its normal case processing procedures:

1. Until further notice, filings due to the New York Field Office are to be made with the Northeastern Regional Office. The address, telephone and facsimile numbers, and e-mail address of the Northeastern Regional Office are: U.S. Customhouse, Room 501, Second & Chestnut Streets, Philadelphia, PA 19106; telephone (215) 597–9960; facsimile (215) 597–3456; e-mail to philadelphia@mspb.gov. Questions regarding cases in the New York Field Office should be directed to the Northeastern Regional Office.

2. In MSPB regional and field offices, judges will exercise discretion in accepting filings due on September 11, 2001, that were made (by any filing method) after that date.

3. At Board headquarters, the Clerk of the Board will exercise discretion in accepting filings due on September 11, 2001, that were sent by regular mail and postmarked after that date. Normally, a show cause order is issued when a late filing is received, but the Clerk of the Board may accept certain filings, particularly from the New York City area, without issuing a show cause order.

4. At Board headquarters, the Clerk of the Board will accept as timely filings

due on September 11, 2001, that were sent by facsimile if the date recorded on the facsimile transmission is September 12, 2001.

5. Where MSPB case files of parties located in the World Trade Center or the Pentagon were destroyed by the attacks, MSPB judges may grant appropriate continuances until the case files can be reconstructed or dismiss cases without prejudice to their later refiling. MSPB offices will also assist the parties in reconstructing case files.

The Board and its employees throughout the country intend to accommodate parties to MSPB cases whose ability to pursue those cases was affected by the attacks on September 11, 2001. Where the variations from normal case processing procedures set forth above do not cover the circumstances in an individual case, the individual circumstances will be considered on a case-by-case basis. The Board and MSPB judges may waive any Board regulation the application of which is not required by law.

Dated: September 20, 2001.

Robert E. Taylor,

Clerk of the Board.

[FR Doc. 01–23986 Filed 9–25–01; 8:45 am]

BILLING CODE 7400–01–M

NATIONAL ARCHIVES AND RECORDS ADMINISTRATION

National Historical Publications and Records Commission; Services for Persons With Limited English Proficiency; Comment Request

AGENCY: National Archives and Records Administration.

ACTION: Notice.

SUMMARY: The National Archives and Records Administration (NARA) is publishing policy guidance on Title VI's prohibition against national origin discrimination under any program or activity that receives NARA financial assistance through the National Historical Publication and Records Commission (NHPRC) as such policy affects persons with limited English proficiency (LEP). The public is invited to comment on NHPRC-assisted programs and activities available to persons with LEP and on steps that NHPRC could take to ensure that persons with LEP have meaningful access to such services. NHPRC will use the information gathered from this notice and other outreach efforts to improve its plan to improve access to these programs and activities by eligible LEP persons.

DATES: This guidance is effective immediately. Written comments must be submitted on or before November 26, 2001. NARA will review all comments and determine whether modifications to the policy guidance are necessary.

ADDRESSES: Interested persons should submit written comments to: Comments on Services for Persons with Limited English Proficiency, ATTN: Diane Dimkoff (NWCC), Room 2400, National Archives and Records Administration, 8601 Adelphi Road, College Park, MD 20740–6001; or faxed to 301–713–7482. You may also comment via the Internet to [*comments@nara.gov*]. Please submit Internet comments within the body of your email message or attach comments as an ASCII file avoiding the use of special characters and any form of encryption. Please also include ''Attn: Limited English Proficiency'' and your name and return address in your Internet message. If you do not receive a confirmation from the system that we have received your Internet message, contact Diane Dimkoff at 301–713–6107.

FOR FURTHER INFORMATION CONTACT: Requests for additional information should be directed to Diane Dimkoff by telephone, or by fax at 301–713–7482. Arrangements to receive the policy in an alternative format may be made by contacting the named individual.

SUPPLEMENTARY INFORMATION: Title VI of the Civil Rights Act of 1964, 42 U.S.C. 2000d, *et seq.* and its implementing regulations provide that no person shall, on the basis of race, color, or national origin, be denied the benefits of, be excluded from participation in, or be subject to discrimination under any program or activity that receives federal financial assistance.

The purposes of this policy guidance are to clarify the responsibilities of recipients of federal financial assistance from NARA's National Historical Publications and Records Commission, and to assist them in fulfilling their responsibilities to persons with limited English proficiency, pursuant to Title VI of the Civil Rights Act of 1964 and its implementing regulations.

Dated: September 18, 2001.

John W. Carlin,

Archivist of the United States.

Guidance to Recipients of the National Historical Publications and Records Commission Federal Financial Assistance: Providing Meaningful Access to Individuals With Limited English Proficiency (''LEP Guidance For NHPRC Recipients'')

I. Introduction

This guidance is based on Title VI of the Civil Rights Act of 1964, 42 U.S.C. 2000d, *et seq.*, and regulations that implement Title VI. Title VI was intended to eliminate barriers based on race, color, and national origin in Federally-assisted programs or activities. In certain circumstances, failing to ensure that persons with LEP can effectively participate in or benefit from Federally-assisted programs and activities or imposing additional burdens on persons with LEP constitutes national origin discrimination.

In August, 2000, the President signed Executive Order 13166, Improving Access to Services for Persons with Limited English Proficiency. Under that Executive Order, every Federal agency that provides financial assistance to non-Federal entities must issue guidance on how their recipients can, consistent with long-standing obligations under Title VI and their fundamental mission, provide reasonable, yet meaningful access to persons with LEP.

The essence of the meaningful access requirement is ''reasonableness.'' In some circumstances, a NHPRC recipient directly serving significant numbers of LEP persons may be obligated to provide language assistance services, including, as appropriate, written translations of documents, procedures and/or forms critical to accessing NHPRC-supported archives. In many other circumstances, however, NHPRC recipients will have little or no obligation to provide language services beyond those many already provide.

This does not mean, however, that the four-factor analysis set out in this Guidance should be read as limiting recipient discretion to provide language assistance services in an effort to broaden its services to the communities it serves. Recipients are encouraged to exercise their flexibility under this Guidance to beyond mere minimal compliance and to create model programs for LEP access.

As required under Executive Order 13166 and the companion DOJ LEP Guidance issued in August, 2000,

recipients should apply a four-factor test to decide what steps are necessary and reasonable to provide meaningful access to their programs and activities for persons with LEP. Once the recipient has identified what language services, if any, are reasonable, the recipient should prepare a written policy on language assistance for persons with LEP (an ''LEP policy''). This plan need not be intricate. It may be as simple as being prepared to use one of the commercially available language lines to obtain interpreter services.

II. The Four-Factor Analysis

''Reasonable steps to ensure meaningful access'' will vary depending on a number of factors. NHPRC recipients should apply the following four factors to the various contacts that they have with the public to decide what reasonable steps they should take to ensure meaningful access for persons with LEP. This balancing test preserves recipient management discretion and flexibility in determining how to best address the language needs of the LEP communities when deciding what documents to translate, and when oral translation is necessary.

A. The Number or Proportion of LEP Persons Served or Encountered in the Eligible Service Population

One factor in determining what language services recipients should provide is the number or proportion of persons with LEP eligible to be served or encountered by the recipient in carrying out its operations. *The greater the number or proportion of persons with LEP, the more likely language services are needed.*

B. The Frequency With Which LEP Individuals Come in Contact With the Program

Recipients should assess, in some fashion, the frequency with which they have contact with LEP language groups. The more frequent the contact, the more likely that language services are needed. The steps that are reasonable for a recipient that serves one person with LEP a year may be very different from those expected from a recipient that serves several persons with LEP each day. For instance, a NHPRC-supported project to arrange and describe a collection consisting primarily of documents originally created in the Spanish language could provide finding aids that are linguistically accessible for Spanish persons with LEP.

C. The Nature and Importance of the Program, Activity, or Service Provided by the Program

The more important the activity, information, service, or program, or the greater the possible consequences of the contact to the LEP individuals, the more likely language services are needed. A recipient should determine if a denial or delay of access to services or information could have serious implications for the LEP individual. This factor weighs heavily in favor of providing language services in situations where the failure to provide such services could have an adverse effect on health, safety, economic security, and other critical areas. Typically, recipients of NHPRC funds provide significant cultural and societal services but such services do not rise to the same level of importance as do the previously mentioned critical areas. In such circumstances, the resources available to the recipient and the cost of providing the services will weigh more heavily in considering what, if any, language services to provide to frequently encountered LEP language groups.

D. The Resources Available to the Recipient

A recipient's level of resources may have an impact on the nature of the steps it should take. Smaller recipient entities with more limited budgets are not expected to provide the same level of language services as larger recipient entities with larger budgets. However, such small recipients should still consider what language services are needed and what they are able to provide. Resource issues can sometimes be minimized by technological advances and sharing of resources and translations.

III. Application of the Four Factors to NHPRC Recipients

NHPRC recipients include, but are not limited to state, county, and local historical societies and archives; universities; colleges; and libraries. All aspects of a program or activity that receives NHPRC assistance are covered by Title VI. Thus, recipient activities vary widely and the results of the application of the four factors varies as well.

NHPRC recipients' Title VI obligations in many cases will be satisfied by making available oral language assistance or commissioning translations on an as-needed basis. There are many circumstances where, after an application and balancing of the four factors noted above, Title VI would not require translation at all. For instance, based on a typical application of the nature and importance of the activity to persons with LEP and the resources available, Title VI does not require an archivist to translate archived collections, but it does require the implementation of appropriate language assistance measures to permit a person with LEP to have access to publicly accessible archives.

IV. Legal Background

Further legal background for this guidance can be found in the Department of Justice Policy Guidance document, titled ''Enforcement of Title VI of the Civil Rights Act of 1964—National Origin Discrimination Against Persons With Limited English Proficiency Policy Guidance'', reprinted at 65 FR 50123 (August 16, 2000).

[FR Doc. 01–23991 Filed 9–25–01; 8:45 am]

BILLING CODE 7515–01–P

NUCLEAR REGULATORY COMMISSION

[IA–01–021]

In the Matter of Mr. Virgil J. Hood, Sr.; Order Prohibiting Involvement in NRC-Licensed Activities (Effective Immediately)

I

Mr. Virgil J. Hood, Sr. was the President and Radiation Safety Officer (RSO) of Moisture Protection Systems Analysts, Inc. (MPSA or the Licensee) formerly located at 1350 Beverly Road, Suite 223, McLean, Virginia 22101. The Licensee was the holder of Byproduct Materials License No. 45–24851–02 (the license), which was issued by the Nuclear Regulatory Commission (NRC or Commission) pursuant to 10 CFR Part 30 on June 19, 1986 and renewed on January 30, 1992. The license authorized MPSA to possess byproduct material, i.e., a Seaman Nuclear Corporation Model R–50 portable roofing gauge containing a nominal 40 millicuries (mCi) of Americium-241, for use in measuring moisture density of roof surfaces in accordance with the conditions specified in the license. On April 20, 1998, the Licensee's license was revoked.

II

Between December 31, 1997 and January 31, 2001, the NRC Office of Investigations (OI) conducted an investigation to determine the location of a moisture density gauge containing licensed material after the Licensee failed to pay the NRC annual license fee

for fiscal year 1996, and had vacated the premises listed on its license without prior notice to the NRC. These actions by the Licensee had resulted in the NRC issuing an Order Suspending License (Effective Immediately) to MPSA (Order Suspending License) on May 15, 1997. The Order Suspending License imposed certain requirements upon the Licensee and required a response from the Licensee. Subsequently, after the Licensee failed to submit the required answer to the Order Suspending License, a Notice of Violation and Proposed Imposition of Civil Penalty—$5,500, and Order Modifying Order Suspending License (Effective Immediately) and Order Revoking License (Order Revoking License) were issued to MPSA revoking its license on April 20, 1998. The Order Revoking License required that the Licensee maintain licensed material in safe storage, immediately notify the NRC of its current business location and status of licensed material, test the gauge for leak tightness, and transfer all licensed material to an authorized recipient within 30 days of the Order Revoking License. To date, the Licensee has failed to respond to the Order Revoking License. On May 5, 2000, the NRC was notified that a portable moisture density gauge containing licensed material had been received at a landfill. The gauge was a Seaman Nuclear Corporation Model No. R–50 portable moisture density gauge, and was labeled as belonging to MPSA.

The Licensee's license dated June 19, 1986, provides that the Licensee shall conduct its program in accordance with the statements, representations, and procedures contained in its application dated June 10, 1986. Mr. Virgil J. Hood, Sr. is identified as the MPSA President and as being chiefly responsible for the Radiation Safety Program in the MPSA Application for Material License dated June 10, 1986. As President and the individual responsible for the Radiation Safety Program, Mr. Hood was responsible for the safe handling of licensed material and for ensuring that licensed activities were conducted in accordance with NRC requirements. In addition, in signing as the Certifying Officer on the 1986 application and the application for license renewal dated January 23, 1992, Mr. Hood attested that the moisture density gauge would be stored at one location (1350 Beverly Road, Suite 223, McLean VA 22101 in the renewal), that he was responsible for the radiation safety program, that the gauge was being stored in a locked enclosure that does not allow access by unauthorized persons, that leak tests would be performed, and, if there was need to dispose of the meter, that it would be returned to Seaman Nuclear Corporation. In signing the application for license, Mr. Hood certified that the MPSA program would conform with 10 CFR parts 30, 32, 33, 34, 35, 40, and all information in the application.

The Orders described above were sent to Mr. Virgil J. Hood, Sr. as President of MPSA. As President and the only user of the gauge identified in the application and license, Mr. Hood was required to respond to the Orders. This response should have included immediately notifying the NRC of its current business location and the status of the licensed material, submitting the results of testing the gauge for leak tightness, and confirming the transfer of all licensed material to an authorized recipient.

The NRC's investigation and review of this matter has determined that Mr. Hood engaged in deliberate misconduct that caused MPSA to be in violation of the Order Revoking License dated April 28, 1998, and 10 CFR 20.2201(a)(1)(i). Specifically, 10 CFR 30.34(a) requires, in part, that each license issued pursuant to the regulations in this part shall be subject to all the provisions of the Atomic Energy Act, now or hereafter in effect, and to all valid rules, regulations and orders of the Commission. As President and RSO for the Licensee, Mr. Hood did not respond in any manner to, or comply with, the requirements of the Order Revoking License to maintain the licensed material in safe storage, immediately notify the NRC of the Licensee's current business location and the status of the licensed material, test the sealed source for leak tightness, transfer the licensed material to an authorized recipient within 30 days of the date of the Order Revoking License, or respond to the violations outlined in the Notice.

Although during the investigation, numerous additional attempts were made to contact Mr. Hood, including the issuance of two subpoenas for compelled interviews at NRC headquarters on September 16, 1998, and December 3, 1999, Mr. Hood failed to appear for the interviews and did not attempt to communicate with the NRC or respond to the Order Suspending License or Order Revoking License.

In addition, 10 CFR 20.2201(a)(1)(i) requires, in part, that each licensee report by telephone immediately after its occurrence becomes known to the licensee, any lost, stolen, or missing licensed material in an aggregate quantity equal to or greater than 1,000 times the quantity specified in Appendix C to part 20 under such circumstances that it appears to the licensee that an exposure could result to persons in unrestricted areas. The NRC concluded that Mr. Hood's activities caused the Licensee to be in violation of 10 CFR 20.2201(a)(1)(i) in that, since May 10, 2000, as President and RSO, Mr. Hood failed to report by telephone that 40 mCi of Americium-241, a quantity greater than 1,000 times the quantity specified in Appendix C to 10 CFR Part 20, contained in a Seaman Nuclear Corporation Model No. R–50 portable moisture density gauge, Serial Number 8064, was lost, stolen, or missing. In May 2000, a Seaman Nuclear Corporation Model No. R–50 portable moisture density gauge, bearing Serial Number 8064, was found in a landfill.

In addition, the Licensee vacated the premises listed on the license (1350 Beverly Road, Suite 223, McLean, Virginia 22101) without prior notice in mid-December 1996, and a forwarding address was provided by one of the Licensee's clients as Atlas Contractors, Inc., 2811 12th Street, NE., Washington, DC 20017–2402. The most recent business address for Atlas Contractors, Inc., is 6224 Georgia Ave NW, Washington, DC 20011–5112. As described above, the NRC has made numerous attempts to contact Mr. Hood at each of these addresses and issued two subpoenas for him to appear at compelled interviews at NRC headquarters. Most recently, on March 23, 2001, the NRC attempted to contact Mr. Hood, by certified mail to provide him with results of the investigation and review of this matter, and to provide him an opportunity to respond to the apparent violation and/or request a predecisional enforcement conference. The NRC's March 23, 2001, letter was sent to MPSA, care of Atlas Contractors, Inc., 6224 Georgia Avenue, NW, Washington, DC 20011 and was returned unopened. On May 18, 2001, the NRC re-sent this letter to Mr. Hood, at 1715 Leighton Wood Lane, Silver Spring, MD, and it was not returned, indicating that the letter was received.

III

Based on the above, the NRC has concluded that Mr. Hood, President and RSO of the Licensee, engaged in deliberate misconduct that has caused the Licensee to be in violation of the Order Suspending License, Order Revoking License, and 10 CFR 20.2201(a)(1)(i). These actions constitute a violation of 10 CFR 30.10, which prohibits an individual from engaging in deliberate misconduct that causes a licensee to be in violation of any rule, regulation, or order or any term, condition or limitation of any license

issued by the Commission. As defined by 10 CFR 30.10(c)(2), deliberate misconduct means an intentional act or omission that the person knows constitutes a violation of a requirement, procedure, or instruction of a licensee.

Mr. Hood's action in causing the Licensee to violate the Order Revoking License, and 10 CFR 20.2201(a)(1)(i), and his unresponsiveness to the NRC, have raised serious doubt as to whether he can be relied upon to comply with NRC requirements.

Consequently, I lack the requisite reasonable assurance that licensed activities can be conducted in compliance with the Commission's requirements and that the health and safety of the public will be protected if Mr. Hood were permitted at this time to be involved in NRC licensed activities. Therefore, the public health, safety and interest require that Mr. Hood be prohibited from any involvement in NRC-licensed activities for a period of five years from the date of this Order. Additionally, Mr. Hood is required to notify the NRC of his first employment in NRC-licensed activities at any time following the prohibition period. Furthermore, pursuant to 10 CFR 2.202, I find that the deliberate nature of Mr. Virgil J. Hood Sr.'s conduct described above is such that the public health, safety and interest require that this Order be immediately effective.

IV

Accordingly, pursuant to Sections 81, 161b, 161i, 161o, 182 and 186 of the Atomic Energy Act of 1954, as amended, and the Commission's regulations in 10 CFR 2.202, 10 CFR 30.10, and 10 CFR 150.20, it is hereby ordered, effective immediately, that:

1. Mr. Virgil J. Hood, Sr. is prohibited for five years from the date of this Order from engaging in NRC-licensed activities. NRC-licensed activities are those activities that are conducted pursuant to a specific or general license issued by the NRC, including, but not limited to, those activities of Agreement State licensees conducted pursuant to the authority granted by 10 CFR 150.20.

2. If Mr. Virgil J. Hood, Sr. is currently involved with another licensee in NRC-licensed activities, he must immediately cease those activities, and inform the NRC of the name, address and telephone number of the employer, and provide a copy of this order to the employer.

3. At any time after the five year period of prohibition has expired, Mr. Virgil J. Hood, Sr. shall, within 20 days of acceptance of his first employment offer involving NRC-licensed activities or his becoming involved in NRC-licensed activities, as defined in Paragraph IV.1 above, provide notice to the Director, Office of Enforcement, U. S. Nuclear Regulatory Commission, Washington, DC 20555, of the name, address, and telephone number of the employer or the entity where he is, or will be, involved in the NRC-licensed activities. In the notification, Mr. Virgil J. Hood, Sr. shall include a statement of his commitment to compliance with regulatory requirements and the basis why the Commission should have confidence that he will now comply with applicable NRC requirements.

The Director, Office of Enforcement, may, in writing, relax or rescind any of the above conditions upon demonstration by Mr. Virgil J. Hood, Sr. of good cause.

V

In accordance with 10 CFR 2.202, Mr. Virgil J. Hood, Sr. must, and any other person adversely affected by this Order may, submit an answer to this Order, and may request a hearing on this Order, within 20 days of the date of this Order. Where good cause is shown, consideration will be given to extending the time to request a hearing. A request for extension of time must be made in writing to the Director, Office of Enforcement, U.S. Nuclear Regulatory Commission, Washington, DC 20555, and include a statement of good cause for the extension. The answer may consent to this Order. Unless the answer consents to this Order, the answer shall, in writing and under oath or affirmation, specifically admit or deny each allegation or charge made in this Order and shall set forth the matters of fact and law on which Mr. Virgil J. Hood, Sr. or other person adversely affected relies and the reasons as to why the Order should not have been issued. Any answer or request for a hearing shall be submitted to the Secretary, U.S. Nuclear Regulatory Commission, Attn: Rulemakings and Adjudications Staff, Washington, DC 20555. Copies also shall be sent to the Director, Office of Enforcement, U.S. Nuclear Regulatory Commission, Washington, DC 20555, to the Assistant General Counsel for Materials Litigation and Enforcement at the same address, to the Regional Administrator, NRC Region II, 61 Forsyth St. SW, Suite 23T85, Atlanta, GA 30303–8931, and to Mr. Virgil J. Hood, Sr. if the answer or hearing request is by a person other than Mr. Virgil J. Hood, Sr. If a person other than Mr. Virgil J. Hood, Sr. requests a hearing, that person shall set forth with particularity the manner in which his or her interest is adversely affected by this Order and shall address the criteria set forth in 10 CFR 2.714(d).

If a hearing is requested by Mr. Virgil J. Hood, Sr. or a person whose interest is adversely affected, the Commission will issue an Order designating the time and place of any hearing. If a hearing is held, the issue to be considered at such hearing shall be whether this Order should be sustained.

In the absence of any request for hearing, or written approval of an extension of time in which to request a hearing, the provisions specified in Section IV above shall be effective and final 20 days from the date of this Order without further order or proceedings. If an extension of time for requesting a hearing has been approved, the provisions specified in Section IV shall be final when the extension expires if a hearing request has not been received. An Answer or a Request for Hearing Shall Not Stay the Immediate Effectiveness of This Order.

Dated this 12th day of September 2001.

For the Nuclear Regulatory Commission.

Carl J. Paperiello,

Deputy Executive Director for Materials, Research and State Programs.

[FR Doc. 01–24048 Filed 9–25–01; 8:45 am]

BILLING CODE 7590–01–P

NUCLEAR REGULATORY COMMISSION

[Docket Nos. 50–220 and 50–410, License Nos. DPR–63 and NPF–69]

In the Matter of Niagara Mohawk Power Corporation, et al., Nine Mile Point Nuclear Station, Unit Nos. 1 and 2, Correction of Order Approving Transfer of Licenses and Conforming Amendments

I

On June 29, 2001 (66 FR 34723), the NRC staff published an Order approving the direct transfer of Facility Operating Licenses Nos. DPR–63 and NPF–69, for the Nine Mile Point Nuclear Station, Unit Nos. 1 and 2 (NMP1 and NMP2), to Nine Mile Point Nuclear Station, LLC (NMP LLC), indirect transfers pertaining to the associated corporate structure changes of NMP LLC's corporate parent, and conforming amendments. Subsequently, the NRC staff noted that the Order contains an inadvertent error, in that the wording ''as required under 10 CFR 50.75(f)(1), unless otherwise approved by the NRC'' should not have been included in condition (2). Accordingly, the staff has corrected this error. The corrected condition (2) now reads: ''On the closing date of the transfer of NMP1 and NMP2 to it, NMP LLC shall: (1) obtain from the transferors all of their accumulated

decommissioning trust funds for NMP1 and NMP2, respectively, and (2) receive [a] parent company guarantee[s] pursuant to 10 CFR 50.75(e)(1)(iii)(B) (to be updated annually) in a form acceptable to the NRC and in [an] amount[s] which, when combined with the decommissioning trust funds for NMP1 and NMP2, equals or exceeds the total amounts required for NMP1 and NMP2, respectively, pursuant to 10 CFR 50.75(b) and (c).''

For further details with respect to this Order, see the initial application dated February 1, 2001, the supplemental submittals dated March 1, March 16, March 29, April 5, April 27, May 30 and June 7, 2001, and the safety evaluation dated June 22, 2001, which are available for public inspection at the Commission's Public Document Room, located at One White Flint North, 11555 Rockville Pike (first floor), Rockville, Maryland, and accessible electronically through the ADAMS Public Electronic Reading Room link at the NRC Web site (*http://www.nrc.gov*).

Dated at Rockville, Maryland this 18th day of September 2001.

For the Nuclear Regulatory Commission.

Peter S. Tam,

Senior Project Manager, Section 1, Project Directorate I, Division of Licensing Project Management, Office of Nuclear Reactor Regulation.

[FR Doc. 01–24049 Filed 9–25–01; 8:45 am]

BILLING CODE 7590–01–P

NUCLEAR REGULATORY COMMISSION

[Docket Nos. 50–254 and 50–265]

Exelon Generation Company, LLC, Quad Cities Nuclear Power Station, Units 1 and 2, Environmental Assessment and Finding of No Significant Impact

The U.S. Nuclear Regulatory Commission (NRC) is considering issuance of revocation of exemptions from 10 CFR part 50, Appendix R, for Facility Operating License Nos. DPR–29 and DPR–30, issued to Exelon Generation Company, LLC (ECG, or the licensee), for operation of the Quad Cities Nuclear Power Station, Units 1 and 2, located in Rock Island County, IL. Therefore, as required by 10 CFR 51.21, the NRC is issuing this environmental assessment and finding of no significant impact.

Environmental Assessment

Identification of the Proposed Action

The proposed exemption revocations would remove (1) an exemption which allows fuse pulling to preclude operation of the reactor relief valves; (2) an exemption which allows for a lack of emergency lighting for suppression pool level instrumentation; (3) an exemption which allows a lack of suppression in the vicinity of electrical equipment; (4) an exemption which allows a lack of 3-hour fire barriers in fire zones 1.1.1.1 (Unit 1) and 1.1.2.1 (Unit 2); (5) an exemption which allows a lack of 3-hour fire barriers between redundant residual heat removal trains in the reactor building and turbine building (Units 1 and 2); (6) an exemption which allows for a lack of 3-hour fire barriers between equivalent fire area 23–1 (8.2.8.D) and the northern and central zone groups; (7) an exemption which allows for a lack of 3-hour fire barriers for certain 4-kV bus duct penetrations; (8) an exemption which allows a lack of 3-hour-rated dampers in certain standby gas treatment and reactor building ventilation ducts; and (9) an exemption which allows a lack of complete detection and suppression throughout the reactor building (Units 1 and 2).

The proposed action is in accordance with the licensee's applications dated June 2 and August 3, 2000, as supplemented by letter dated September 18, 2001. Additional information was provided by letter dated May 23, 2001. The original applications were submitted by the Commonwealth Edison Company (ComEd), which merged to form EGC. By letter dated February 7, 2001, EGC assumed responsibility for all pending NRC actions that were requested by ComEd.

The Need for the Proposed Action

The proposed action will eliminate unnecessary exemptions to Appendix R of 10 CFR part 50.

Environmental Impacts of the Proposed Action

The NRC has completed its evaluation of the proposed action and concludes that the proposed revocation of exemptions is appropriate. The revocation of the exemptions reflects analyses performed by the licensee to bring plant configuration into compliance with Appendix R, thereby eliminating the need for the subject exemptions.

With regard to potential non-radiological impacts, the proposed action does involve features located entirely within the restricted area as defined in 10 CFR part 20.

The proposed action will not significantly increase the probability or consequences of accidents, no changes are being made in the types of effluents that may be released off site, and there is no significant increase in occupational or public radiation exposure. Therefore, there are no significant radiological environmental impacts associated with the proposed action.

With regard to potential non-radiological impacts, the proposed action does not have a potential to affect any historic sites. It does not affect non-radiological plant effluents and has no other environmental impact. Therefore, there are no significant non-radiological environmental impacts associated with the proposed action.

Accordingly, the NRC concludes that there are no significant environmental impacts associated with the proposed action.

Environmental Impacts of the Alternatives to the Proposed Action

As an alternative to the proposed action, the staff considered denial of the proposed action (i.e., the ''no-action'' alternative). Denial of the application would result in no change in current environmental impacts. The environmental impacts of the proposed action and the alternative action are similar.

Alternative Use of Resources

The action does not involve the use of any different resource than those previously considered in the Final Environmental Statement for the Quad Cities Nuclear Power Station, Units 1 and 2, dated September 1972.

Agencies and Persons Consulted

On September 17, 2001, the staff consulted with the Illinois State official, Frank Niziolek of the Illinois Department of Nuclear Safety, regarding the environmental impact of the proposed action. The State official had no comments.

Finding of No Significant Impact

On the basis of the environmental assessment, the NRC concludes that the proposed action will not have a significant effect on the quality of the human environment. Accordingly, the NRC has determined not to prepare an environmental impact statement for the proposed action.

For further details with respect to the proposed action, see the licensee's letters dated June 2, 2000, August 3, 2000, May 23, 2001 and September 18, 2001. Documents may be examined, and/or copied for a fee, at the NRC's Public Document Room (PDR), located at One White Flint North, 11555 Rockville Pike (first floor), Rockville, Maryland. Publicly available records will be accessible electronically from

the ADAMS Public Library component on the NRC Web site, *http://www.nrc.gov* (the Public Electronic Reading Room). If you do not have access to ADAMS or if there are problems in accessing the documents located in ADAMS, contact the NRC PDR Reference staff at 1–800–397–4209, or 301–415–4737, or by e-mail at *pdr@nrc.gov.*

Dated at Rockville, Maryland, this 20th day of September 2001.

For the Nuclear Regulatory Commission.

Anthony J. Mendiola,

Chief, Section 2, Project Directorate III, Division of Licensing Project Management, Office of Nuclear Reactor Regulation.

[FR Doc. 01–24046 Filed 9–25–01; 8:45 am]

BILLING CODE 7590–01–P

NUCLEAR REGULATORY COMMISSION

[Docket No. 50–73]

General Electric Company; The General Electric Nuclear Test Reactor Environmental Assessment and Finding of No Significant Impact

The U.S. Nuclear Regulatory Commission (NRC) is considering issuance of an amendment for Facility Operating License No. R–33, issued to the General Electric Company (the licensee), for operation of the General Electric Nuclear Test Reactor, located in Sunol, California. Therefore, as required by 10 CFR 51.21, the NRC is issuing this environmental assessment and finding of no significant impact.

Environmental Assessment

Identification of the Proposed Action

The proposed action would correct typographical errors in section numbers referenced in the Technical Specifications.

The proposed action is in accordance with the licensee's application dated July 3, 2001.

Need for the Proposed Action

The proposed action would make the Technical Specifications accurate.

Environmental Impacts of the Proposed Action

The NRC has completed its evaluation of the proposed action and concludes that the proposed action is administrative in nature and will have no significant environmental impacts.

The proposed action will not significantly increase the probability or consequences of accidents, no changes are being made in the types of effluents that may be released off site, and there is no significant increase in occupational or public radiation exposure. Therefore, there are no significant radiological environmental impacts associated with the proposed action.

With regard to potential non-radiological impacts, the proposed action does not have a potential to affect any historic sites. It does not affect non-radiological plant effluents and has no other environmental impact. Therefore, there are no significant non-radiological environmental impacts associated with the proposed action.

Accordingly, the NRC concludes that there are no significant environmental impacts associated with the proposed action.

Environmental Impacts of the Alternatives to the Proposed Action

As an alternative to the proposed action, the staff considered denial of the proposed action (i.e., the ''no-action'' alternative). Denial of the application would result in no change in current environmental impacts. The environmental impacts of the proposed action and the alternative action are similar.

Alternative Use of Resources

The action does not involve the use of any different resource than those previously considered in the Environmental Assessment for the General Electric Nuclear Test Reactor dated April 13, 2001.

Agencies and Persons Consulted

On August 10, 2001, the staff consulted with the California Department of Health official, Steve Hsu, regarding the environmental impact of the proposed action. The State official had no comments.

Finding of No Significant Impact

On the basis of the environmental assessment, the NRC concludes that the proposed action will not have a significant effect on the quality of the human environment. Accordingly, the NRC has determined not to prepare an environmental impact statement for the proposed action.

For further details with respect to the proposed action, see the licensee's letter dated July 3, 2001. Documents may be examined, and/or copied for a fee, at the NRC's Public Document Room, located at One White Flint North, 11555 Rockville Pike (first floor), Rockville, Maryland. Publically available records will be accessible electronically from the ADAMS Public Library component on the NRC Web site, *http://www.nrc.gov* (the Public Electronic Reading Room). If you do not have access to ADAMS or if there are problems in accessing the documents located in ADAMS, contact the NRC Public Document Room (PDR) Reference staff at 1–800–397–4209, or 301–415–4737, or by e-mail at *pdr@nrc.gov.*

Dated at Rockville, Maryland, this 18th day of September, 2001.

For the Nuclear Regulatory Commission.

Patrick M. Madden,

Chief, Non-Power Reactors Section, Operational Experience and Non-Power Reactors Branch, Division of Regulatory Improvement Programs, Office of Nuclear Reactor Regulation.

[FR Doc. 01–24047 Filed 9–25–01; 8:45 am]

BILLING CODE 7590–01–P

OFFICE OF MANAGEMENT AND BUDGET

Public Availability of Year 2001 Agency Inventories Under the Federal Activities Inventory Reform Act of 1998 (Public Law 105–270) (''FAIR Act'')

AGENCY: Office of Management and Budget Executive Office of the President.

ACTION: Notice of public availability of Agency Inventories of Activities that are not Inherently Governmental.

SUMMARY: Agency Inventories of Activities that are not Inherently Governmental are now available to the public from the agencies listed below, in accordance with the ''Federal Activities Inventory Reform Act of 1998'' (Public Law 105–270) (''FAIR Act''). This is the first release of the 2001 FAIR Act inventories. In addition, the Office of Federal Procurement Policy has prepared and has made available a summary FAIR Act User's Guide through its Internet site: *http://www.whitehouse.gov/OMB/procurement/index.html.* This User's Guide will help interested parties review 2001 FAIR Act inventories, and will also include the web-site addresses to access agency inventories.

The FAIR Act requires that OMB publish an announcement of public availability of agency Inventories of Activities that are not Inherently Governmental upon completion of OMB's review and consultation process concerning the content of the agencies' inventory submissions. OMB has now completed this process for the year 2001.

The attached Inventories of Activities that are not Inherently Governmental are now available.

Mitchell E. Daniels, Jr.,
Director.
Attachment

ATTACHMENT

Agency	Contact
Advisory Council on Historic Preservation	Carol McLain, 202–606–8511 Website: *www.achp.gov/fairact.html*
African Development Foundation	Tom Coogan, 202–673–3916 Website: *www.adf.gov*
American Battle Monuments Commission	Anthony Corea, 703–696–6898 Website: *www.usabmc.com*
Appalachian Regional Commission	Richard Kodl, 202–884–7666 Website: *www.arc.gov/infopubs/infomain.html*
Architectural and Transportation Barriers Compliance Board	Lawrence W. Roffee, 202–272–5434, ext. 113, Website: *www.access-board.gov*
Arlington National Cemetery	Rory Smith, 703–614–5060 Website: *www.arlingtoncemetery.org/*
Broadcasting Board of Governors	Dennis Sokol, 202–619–3988 Website: *www.ibb.gov/fairact*
Commission on Fine Arts	Jeff Carson, 202–504–2200 Website: *www.whitehouse.gov/OMB/procurement*
Defense Nuclear Facilities Safety Board	Andrew Thibadeau, 202–694–7000 Website: *www.dnfsb.gov*
Defense (Office of Inspector General)	Wayne Berry, 703–604–8789 Website: *www.dodig.osd.mil*
Energy	Mark R. Hively, 202–586–5655 Website: *www.pr.doe.gov/a76.html*
Federal Housing Finance Board	John Waters, 202–408–2860 Website: *www.fhfb.gov*
Federal Election Commission	John O'Brien, 202–694–1215 Website: *www.fec.gov*
Federal Trade Commission	Elliott Davis, 202–326–2022 Website: *www.ftc.gov*
Federal Mediation and Conciliation Service	George Buckingham, 202–606–8100 Website: *www.fmcs.gov*
Federal Communications Commission (Office of Inspector General)	Charles Willoughby, 202–418–0472 Website: *www.fcc.gov*
Federal Housing Enterprise Oversight	Jill Weide, 202–414–3813 Website: *www.ofheo.gov*
Federal Emergency Management Agency	Margaret Chan, 202–646–2988 Website: *www.fema.gov*
Harry S. Truman Scholarship Foundation	Louis H. Blair, 202–395–4831 Website: *www.truman.gov*
Holocaust Museum	Jay Gaglione, 202–314–0336 Website: *www.ushmm.org*
Housing and Urban Development (Office of Inspector General)	Stanley McLeod, 202–708–3444, ext. 156 Website: *www.hud.gov/oig/oigindex.html*
Institute of Museum and Library Services	Linda Bell, 202–606–8637 Website: *www.imls.gov*
Inter-American Foundation	Carolyn Karr, 703–306–4350 Website: *www.iaf.gov*
International Trade Commission	Judith Gwynn, 202–205–2202 Website: *www.usitc.gov*
James Madison Memorial Fellowship Foundation	Steve Weiss, 202–653–6109 Website: *www.jamesmadison.com*
Kennedy Center	Jared Barlage, 202–416–8721 Website: *www.kennedy-center.org*
Merit Systems Protection Board	Douglas Wade, 202–653–6772 ext. 1118 Website: *www.mspb.gov*
National Gallery of Art	Bill Roache, 202–842–6329 Website: *www.nga.gov*
Office of Navaho and Hopi Indian Relocation	Michael J. McAlister, 520–779–2721 Website: *www.whitehouse.gov/OMB/procurement*
National Credit Union Administration	Michael McNeill, 703–518–6574 Website: *www.ncua.gov*
National Council on Disability	Ethel D. Briggs, 202–272–2004 Website: *www.ncd.gov*
National Archives and Records Administration (Office of Inspector General).	James Springs, 301–713–7300, ext. 224 Website: *www.nara.gov*
National Archives and Records Administration	Lori Lisowski, 301–713–7360, ext. 257 Website: *www.nara.gov*
National Endowment for the Humanities	Barry Maynes, 202–606–8233 Website: *www.neh.gov*
National Aeronautics and Space Administration	Timothy Sullivan, 202–358–2215 Website: *www.HQ.NASA.gov/fair*
National Transportation Safety Board	Pamela Pearson, 202–314–6231 Website: *www.ntsb.gov*
National Science Foundation	Gary Scavongelli, 703–292–8102 Website: *www.nsf.gov*
National Labor Relations Board	Harding Darden, 202–273–3970 Website: *www.nlrb.gov*
Nuclear Regulatory Commission (Office of Inspector General)	David Lee, 301–415–5930 Website: *www.nrc.gov*
Nuclear Regulatory Commission	Ronald Thompson, 301–415–6732 Website: *www.nrc.gov*
Nuclear Waste Technical Review Board	Dr. William Barnard, 703–235–4473 Website: *www.nwtrb.gov*
Occupational Safety and Health Review Commission	Ledia Bernal, 202–606–5390 Website: *www.oshrc.gov*
Office of Management and Budget	Trish Haney, 202–395–7250 Website: *www.whitehouse.gov/OMB/procurement*
Office of National Drug Control Policy	Tilman Dean, 202–395–6722 Website: *www.whitehousedrugpolicy.org*
Office of the Special Counsel	Jane McFarland, 202–653–9001 Website: *www.osc.gov*
Office of the US Trade Representative	John Hopkins, 202–395–5799 Website: *www.ustr.gov*
Peace Corps	Susan Hancks, 202–692–1612 Website: *www.peacecorps.gov*
Selective Service System	Calvin Montgomery, 703–605–4038 Website: *www.sss.gov*
Small Business Administration	Tom Dumaresq, 202–205–6630 Website: *www.sba.gov*
Small Business Administration (Office of Inspector General)	Bridget Bean, 202–205–6580 Website: *www.sba.gov/ig*
State	Robert McFadden, 202–647–7780 Website: *www.state.gov/www/dept/fmp/related_sites*
Transportation (Office of Inspector General)	Sam Davis, 202–366–1444 Website: *www.oig.dot.gov*
US Chemical Safety Board	Christopher Warner, 202–261–7624 Website: *www.csb.gov*
US Agency for International Development (Office of Inspector General)	Deborah Lewis, 202–712–0936 Website: *www.usaid.gov/procurement_bus_opp*
US Trade and Development Agency	Steven Berry, 703–875–5016 Website: *www.tda.gov*

ATTACHMENT—Continued

Agency	Contact
Veterans Affairs	Curtis Marshall, 202–273–7522 Website: *www.va.gov*

[FR Doc. 01–23990 Filed 9–25–01; 8:45 am]

BILLING CODE 3110–01–P

OFFICE OF PERSONNEL MANAGEMENT

Submission for OMB Review: Comment Request for Clearance of a New Information Collection; Standard Form 86 Certification (SF 86C)

AGENCY: Office of Personnel Management.

ACTION: Notice.

SUMMARY: In accordance with the Paperwork Reduction Act of 1995 (Public Law 104–13, May 22, 1995) and 5 CFR 1320.5(a)(1)(iv), this notice announces that the U.S. Office of Personnel Management (OPM) has submitted to the Office of Management and Budget (OMB) a request for clearance of a new information collection.

The Standard Form 86, Questionnaire for National Security Positions, is completed by persons performing or seeking to perform national security duties for the Federal government. That form is used by OPM and by other Federal agencies to initiate the background investigation required to determine placement in national security positions in accordance with 42 U.S.C. 2165, 22 U.S.C. 2585, E.O. 10450, Security Requirements for Government Employment, issued April 27, 1953, and E.O. 12968, Access to Classified Information, issued August 2, 1995.

There are many situations where individuals are required to fill out an SF 86 when the sole purpose is to determine if any information on a previously executed SF 86 has changed. This requires extensive execution even if nothing has changed.

The information collection being proposed is a certification device (tentatively numbered SF 86C) that allows reporting of changes in previously reported information on the SF 86. Certification will be in lieu of executing a new SF 86, and will allow the individual to indicate that there have been no changes in the data provided on the most recently filed SF 86, or, where there are changes, to provide the new changed information. No investigation will be initiated based solely on the execution of this form. However, information provided on this form may provide cause to require execution of a new SF 86 in order for an investigation to be scheduled. This is no different than if an SF 86 had been used in the first place to ''update'' information. This certification device will ask for nothing more or less than is asked for on the current SF 86.

OPM published a request for comments on this information device in the **Federal Register** on November 19, 1999 (Vol. 64, No. 223, Page 63349). A total of 51 responses were received; 42 from private citizens and 9 from Federal agencies. Although a few were neutral (e.g., made a suggestion), the vast majority were very supportive of this form. Many citizen responses were from individuals in private industry who have to undergo periodic screening for security clearances at their job. Some were from Facility Security Officers in industry who spoke on behalf of their employer in supporting the form. We have considered all the comments and revised the form accordingly.

It was estimated that upwards of one and one-quarter (1.25) hours would be saved by individuals filling out this form versus executing a complete Standard Form 86. Representatives of private industry who are very involved in working on classified projects were asked to comment on the number of individuals who would be favorably affected by using this form. Industry estimated that over 10,000 people would benefit from this form. We opine that that estimate is conservative. Federal employees and employers would benefit equally, and the number would be greater than the estimate of private industry. OPM estimates at least 50,000 respondents would complete only the SF 86C, taking 15 minutes to do so, involving an annual burden of 12,500 hours, but saving 62,500 hours of burden for those who no longer need to complete a SF 86.

For copies of this request, please contact Mary Beth Smith-Toomey at (202) 606–8358, FAX (202) 418–3251 or by E-Mail at *mbtoomey@opm.gov*. Please include a mailing address with your request.

DATES: Comments on this proposal should be received no later than October 26, 2001.

ADDRESSES: Send or deliver written comments to:

Richard A. Ferris, Associate Director, Investigations Service, Office of Personnel Management, Room 5416, 1900 E Street, NW., Washington, DC 20415–4000

or

Joseph Lackey, OPM Desk Officer, Office of Information and Regulatory Affairs, Office of Management and Budget, Room 10235, 17th Street and Pennsylvania Avenue, NW., Washington, DC 20503.

FOR FURTHER INFORMATION, CONTACT: John H. Crandell, Chief, Oversight and Technical Assistance Division, Investigations Service, OPM, (202) 606–2084 or fax (202) 606–2390.

Office of Personnel Management.

Kay Coles James,

Director.

[FR Doc. 01–24102 Filed 9–25–01; 8:45 am]

BILLING CODE 3206–40–P

OFFICE OF PERSONNEL MANAGEMENT

Excepted Service; Consolidated Listing of Schedules A, B, and C Exceptions

AGENCY: Office of Personnel Management.

ACTION: Notice.

SUMMARY: This gives a consolidated notice of all positions excepted under Schedules A, B, and C as of June 30, 2001, as required by Civil Service Rule VI, Exceptions from the Competitive Service.

SUPPLEMENTARY INFORMATION: Civil Service Rule VI (5 CFR 6.1) requires the Office of Personnel Management (OPM) to publish notice of all exceptions granted under Schedules A, B, and C. Title 5, Code of Federal Regulations, § 213.103(c), further requires that a consolidated listing, current as of June 30 of each year, be published annually as a notice in the **Federal Register**. That notice follows. OPM maintains continuing information on the status of all Schedule A, B, and C excepted appointing authorities. Interested parties needing information about specific authorities during the year may obtain information by writing to the Office of Employment Policy, Staffing and Restructuring Policy Division, Room 6500, Office of Personnel

Management, 1900 E Street, NW., Washington, DC 20415, or by calling (202) 606–0960.

The following exceptions were current on June 30, 2001:

Schedule A

Section 213.3102 Entire Executive Civil Service

(a) Positions of Chaplain and Chaplain's Assistant.

(b) (Reserved).

(c) Positions to which appointments are made by the President without confirmation by the Senate.

(d) Attorneys.

(e) Law clerk trainee positions. Appointments under this paragraph shall be confined to graduates of recognized law schools or persons having equivalent experience and shall be for periods not to exceed 14 months pending admission to the bar. No person shall be given more than one appointment under this paragraph. However, an appointment that was initially made for less than 14 months may be extended for not to exceed 14 months in total duration.

(f) Chinese, Japanese, and Hindu interpreters.

(g) Any nontemporary position the duties of which are part-time or intermittent in which the appointee will receive compensation during his or her service year that aggregates not more than 40 percent of the annual salary rate for the first step of grade GS–3. This limited compensation includes any premium pay such as for overtime, night, Sunday, or holiday work. It does not, however, include any mandatory within-grade salary increases to which the employee becomes entitled subsequent to appointment under this authority. Appointments under this authority may not be for temporary project employment.

(h) Reserved.

(i) Temporary and less-than-full time positions for which examining is impracticable. These are:

(1) Positions in remote/isolated locations where examination is impracticable. A remote/isolated location is outside of the local commuting area of a population center from which an employee can reasonably be expected to travel on short notice under adverse weather and/or road conditions which are normal for the area. For this purpose, a population center is a town with housing, schools, health care, stores and other businesses in which the servicing examining office can schedule tests and/or reasonably expect to attract applicants. An individual appointed under this authority may not be employed in the same agency under a combination of this and any other appointment to positions involving related duties and requiring the same qualifications for more than 1,040 working hours in a service year. Temporary appointments under this authority may be extended in 1-year increments, with no limit on the number of such extensions, as an exception to the service limits in § 213.104.

(2) Positions for which a critical hiring needs exists. This includes both short-term positions and continuing positions that an agency must fill on an interim basis pending completion of competitive examining, clearances, or other procedures required for a longer appointment. Appointments under this authority may not exceed 30 days and may be extended up to an additional 30 days if continued employment is essential to the agency's operations. The appointments may not be used to extend the service limit of any other appointing authority. An agency may not employ the same individual under this authority for more than 60 days in any 12-month period.

(3) Other positions for which OPM determines that examining is impracticable.

(j) Positions filled by current or former Federal employees eligible for placement under special statutory provisions. Appointments under this authority are subject to the following conditions:

(1) *Eligible employees.* (i) Persons previously employed as National Guard Technicians under 32 U.S.C. 709(a) who are entitled to placement under § 353.110 of this chapter, or who are applying for or receiving an annuity under the provisions of 5 U.S.C. 8337(h) or 5 U.S.C. 8456 by reason of a disability that disqualifies them from membership in the National Guard or from holding the military grade required as a condition of their National Guard employment;

(ii) Executive branch employees (other than employees of intelligence agencies) who are entitled to placement under § 353.110 but who are not eligible for reinstatement or noncompetitive appointment under the provisions of part 315 of this chapter.

(iii) Legislative and judicial branch employees and employees of the intelligence agencies defined in 5 U.S.C. 2302(a)(2)(C)(ii) who are entitled to placement assistance under § 353.110.

(2) *Employees excluded.* Employees who were last employed in Schedule C or under a statutory authority that specified the employee served at the discretion, will, or pleasure of the agency are not eligible for appointment under this authority.

(3) *Position to which appointed.* Employees who are entitled to placement under § 353.110 will be appointed to a position that OPM determines is equivalent in pay and grade to the one the individual left, unless the individual elects to be placed in a position of lower grade or pay. National Guard Technicians whose eligibility is based upon a disability may be appointed at the same grade, or equivalent, as their National Guard Technician position or at any lower grade for which they are available.

(4) *Conditions of appointment.* (i) Individuals whose placement eligibility is based on an appointment without time limit will receive appointments without time limit under this authority. These appointees may be reassigned, promoted, or demoted to any position within the same agency for which they qualify.

(ii) Individuals who are eligible for placement under § 353.110 based on a time-limited appointment will be given appointments for a time period equal to the unexpired portion of their previous appointment.

(k) Positions without compensation provided appointments thereto meet the requirements of applicable laws relating to compensation.

(l) Positions requiring the temporary or intermittent employment of professional, scientific, and technical experts for consultation purposes.

(m) (Reserved).

(n) Any local physician, surgeon, or dentist employed under contract or on a part-time or fee basis.

(o) Positions of a scientific, professional or analytical nature when filled by bona fide members of the faculty of an accredited college or university who have special qualifications for the positions to which appointed. Employment under this provision shall not exceed 130 working days a year.

(p)–(q) (Reserved).

(r) Positions established in support of fellowship and similar programs that are filled from limited applicant pools and operate under specific criteria developed by the employing agency and/or a non-Federal organization. These programs may include: internship or fellowship programs that provide developmental or professional experiences to individuals who have completed their formal education; training and associateship programs designed to increase the pool of qualified candidates in a particular occupational specialty; professional/industry exchange programs that

provide for a cross-fertilization between the agency and the private sector to foster mutual understanding, an exchange of ideas, or to bring experienced practitioners to the agency; residency programs through which participants gain experience in a Federal clinical environment; and programs that require a period of Government service in exchange for educational, financial or other assistance. Appointment under this authority may not exceed 4 years.

(s) Positions with compensation fixed under 5 U.S.C. 5351–5356 when filled by student-employees assigned or attached to Government hospitals, clinics or medical or dental laboratories. Employment under this authority may not exceed 4 years.

(t) Positions when filled by mentally retarded persons in accordance with the guidance in Federal Personnel Manual chapter 306. Upon completion of 2 years of satisfactory service under this authority, the employee may qualify for conversion to competitive status under the provisions of Executive Order 12125 and implementing regulations issued by OPM.

(u) Positions when filled by severely physically handicapped persons who: (1) under a temporary appointment have demonstrated their ability to perform the duties satisfactorily; or (2) have been certified by counselors of State vocational rehabilitation agencies or the Veterans Administration as likely to succeed in the performance of the duties. Upon completion of 2 years of satisfactory service under this authority, the employee may qualify for conversion to competitive status under the provisions of Executive Order 12125 and implementing regulations issued by OPM.

(v)–(w) (Reserved).

(x) Positions for which a local recruiting shortage exists when filled by inmates of Federal, District of Columbia, and State (including the Commonwealth of Puerto Rico, the Virgin Islands, Guam, American Samoa, and the Trust Territory of the Pacific Islands) penal and correctional institutions under work-release programs authorized by the Prisoner Rehabilitation Act of 1965, the District of Columbia Work Release Act, or under work-release programs authorized by the States. Initial appointments under this authority may not exceed 1 year. An initial appointment may be extended for one or more periods not to exceed 1 additional year each upon a finding that the inmate is still in a work-release status and that a local recruiting shortage still exists. No person may serve under this authority longer than 1 year beyond the date of that person's release from custody.

(y) (Reserved).

(z) Not to exceed 30 positions of assistants to top-level Federal officials when filled by persons designated by the President as White House Fellows.

(aa) Scientific and professional research associate positions at GS–11 and above when filled on a temporary basis by persons having a doctoral degree in an appropriate field of study for research activities of mutual interest to appointees and their agencies. Appointments are limited to persons referred by the National Research Council under its post-doctoral research associate program, may not exceed 2 years, and are subject to satisfactory outcome of evaluation of the associate's research during the first year.

(bb) Positions when filled by aliens in the absence of qualified citizens. Appointments under this authority are subject to prior approval of OPM except when the authority is specifically included in a delegated examining agreement with OPM.

(cc)–(ee) (Reserved).

(ff) Not to exceed 25 positions when filled in accordance with an agreement between OPM and the Department of Justice by persons in programs administered by the Attorney General of the United States under Public Law 91–452 and related statutes. A person appointed under this authority may continue to be employed under it after he/she ceases to be in a qualifying program only as long as he/she remains in the same agency without a break in service.

(gg) Positions when filled by persons with psychiatric disabilities who have demonstrated their ability to perform satisfactorily under a temporary appointment [such as one authorized in 213.3102(i)(3)] or who are certified as likely to be able to perform the essential functions of the job, with or without reasonable accommodation, by a State vocational rehabilitation counselor, a U.S. Department of Veterans Affairs, Veterans Benefits Administration, or Veterans Health Administration psychologist, vocational rehabilitation counselor, or psychiatrist. Upon completion of 2 years of satisfactory service under this authority, the employee can be converted, at the discretion of the agency, to competitive status under the provisions of Executive Order 12125 as amended by Executive Order 13124.

(hh) (Reserved).

(ii) Positions of Presidential Intern, GS–9 and 11, in the Presidential Management Intern Program. Initial appointments must be made at the GS–9 level. No one may serve under this authority for more than 2 years, unless extended with OPM approval for up to 1 additional year. Upon completion of 2 years of satisfactory service under this authority, the employee may qualify for conversion to competitive appointment under the provisions of Executive order 12364, in accordance with requirements published in the Federal Personnel Manual.

(jj)–(kk) (Reserved).

(ll) Positions as needed of readers for blind employees, interpreters for deaf employees and personal assistants for handicapped employees, filled on a full time, part-time, or intermittent basis.

Section 213.3103 Executive Office of the President

(a) *Office of Administration.* (1) Not to exceed 75 positions to provide administrative services and support to the White House office.

(b) *Office of Management and Budget.* (1) Not to exceed 15 positions at grades GS–5/15.

(c) *Council on Environmental Quality.* (1) Professional and technical positions in grades GS–9 through 15 on the staff of the Council.

(d)–(f) (Reserved).

(g) *National Security Council.* (1) All positions on the staff of the Council.

(h) *Office of Science and Technology Policy.* (1) Thirty positions of Senior Policy Analyst, GS–15; Policy Analyst, GS–11/14; and Policy Research Assistant, GS–9, for employment of anyone not to exceed 5 years on projects of a high priority nature.

(i) *Office of National Drug Control Policy.* (1) Not to exceed 15 positions, GS–15 and below, of senior policy analysts and other personnel with expertise in drug-related issues and/or technical knowledge to aid in anti-drug abuse efforts.

Section 213.3104 Department of State

(a) *Office of the Secretary.* (1) All positions, GS–15 and below, on the staff of the Family Liaison Office, Director General of the Foreign Service and the Director of Personnel, Office of the Under Secretary for Management.

(2) One position of Museum Curator (Arts), in the Office of the Under Secretary for Management, whose incumbent will serve as Director, Diplomatic Reception Rooms. No new appointments may be made after February 28, 1997.

(b) *American Embassy, Paris, France.* (1) Chief, Travel and Visitor Unit. No new appointments may be made under this authority after August 10, 1981.

(c)–(f) (Reserved).

(g) *Bureau of Population, Refugees, and Migration.* (1) Not to exceed 10

positions at grades GS–5 through 11 on the staff of the Bureau.

(h) *Bureau of Administration.* (1) One Presidential Travel Officer. No new appointments may be made under this authority after June 11, 1981.

(2) One position of the Director, Art in Embassies Program, GM–1001–15.

Section 213.3105 Department of the Treasury

Office of the Secretary. (1) Not to exceed 20 positions at the equivalent of GS–13 through GS–17 to supplement permanent staff in the study of complex problems relating to international financial, economic, trade, and energy policies and programs of the Government, when filled by individuals with special qualifications for the particular study being undertaken. Employment under this authority may not exceed 4 years.

(2) Not to exceed 20 positions, which will supplement permanent staff involved in the study and analysis of complex problems in the area of domestic economic and financial policy. Employment under this authority may not exceed 4 years.

(3) Not to exceed 20 positions in the Office of the Under Secretary (Enforcement). Employment under this authority may not exceed 4 years, and no new appointments may be made after July 31, 2001.

(b) *U.S. Customs Service.* (1) Positions in foreign countries designated as ''interpreter-translator'' and ''special employees,'' when filled by appointment of persons who are not citizens of the United States; and positions in foreign countries of messenger and janitor.

(2)–(5) (Reserved).

(6) Three hundred positions of Criminal Investigator for special assignments and 10 positions for oversight policy and direction of sensitive law enforcement activities.

(7)–(8) (Reserved).

(9) Not to exceed 25 positions of Customs Patrol Officers in the Papago Indian Agency in the State of Arizona when filled by the appointment of persons of one-fourth or more Indian blood.

(c) (Reserved).

(d) *Office of Thrift Supervision.* (1) All positions in the supervision policy and supervision operations functions of OTS. No new appointments may be made under this authority after December 31, 1993.

(e) *Internal Revenue Service.* (1) Twenty positions of investigator for special assignments.

(f) (Reserved).

(g) *Bureau of Alcohol, Tobacco, and Firearms.* (1) One hundred positions of criminal investigator for special assignments.

(2) One non-permanent Senior Level (SL) Criminal Investigator to serve as a senior advisor to the Assistant Director (Firearms, Explosives, and Arson).

Section 213.3106 Department of Defense

(a) *Office of the Secretary.* (1)–(5) (Reserved).

(6) One Executive Secretary, US–USSR Standing Consultative Commission and Staff Analyst (SALT), Office of the Assistant Secretary of Defense (International Security Affairs).

(b) *Entire Department (including the Office of the Secretary of Defense and the Departments of the Army, Navy, and Air Force).* (1) Professional positions in Military Dependent School Systems overseas.

(2) Positions in attache 1 systems overseas, including all professional and scientific positions in the Naval Research Branch Office in London.

(3) Positions of clerk-translator, translator, and interpreter overseas.

(4) Positions of Educational Specialist the incumbents of which will serve as Director of Religious Education on the staffs of the chaplains in the military services.

(5) Positions under the program for utilization of alien scientists, approved under pertinent directives administered by the Director of Defense Research and Engineering of the Department of Defense, when occupied by alien scientists initially employed under the program including those who have acquired United States citizenship during such employment.

(6) Positions in overseas installations of the Department of Defense when filled by dependents of military or civilian employees of the U.S. Government residing in the area. Employment under this authority may not extend longer than 2 months following the transfer from the area or separation of a dependent's sponsor: *Provided*, that (i) a school employee may be permitted to complete the school year; and (ii) an employee other than a school employee may be permitted to serve up to 1 additional year when the military department concerned finds that the additional employment is in the interest of management.

(7) Twenty secretarial and staff support positions at GS–12 or below on the White House Support Group.

(8) Positions in DOD research and development activities occupied by participants in the DOD Science and Engineering Apprenticeship Program for High School Students. Persons employed under this authority shall be bona fide high school students, at least 14 years old, pursuing courses related to the position occupied and limited to 1,040 working hours a year. Children of DOD employees may be appointed to these positions, notwithstanding the sons and daughters restriction, if the positions are in field activities at remote locations. Appointments under this authority may be made only to positions for which qualification standards established under 5 CFR Part 302 are consistent with the education and experience standards established for comparable positions in the competitive service. Appointments under this authority may not be used to extend the service limits contained in any other appointing authority.

(c) (Reserved).

(d) *General.* (1) Positions concerned with advising, administering, supervising, or performing work in the collection, processing, analysis, production, evaluation, interpretation, dissemination, and estimation of intelligence information, including scientific and technical positions in the intelligence function; and positions involved in the planning, programming, and management of intelligence resources when, in the opinion of OPM, it is impracticable to examine. This authority does not apply to positions assigned to cryptologic and communications intelligence activities/functions.

(2) Positions involved in intelligence-related work of the cryptologic intelligence activities of the military departments. This includes all positions of intelligence research specialist, and similar positions in the intelligence classification series; all scientific and technical positions involving the applications of engineering, physical or technical sciences to intelligence work; and professional as well as intelligence technician positions in which a majority of the incumbent's time is spent in advising, administering, supervising, or performing work in the collection, processing, analysis, production, evaluation, interpretation, dissemination, and estimation of intelligence information or in the planning, programming, and management of intelligence resources.

(e) *Uniformed Services University of the Health Sciences.* (1) Positions of President, Vice Presidents, Assistant Vice Presidents, Deans, Deputy Deans, Associate Deans, Assistant Deans, Assistants to the President, Assistants to the Vice Presidents, Assistants to the Deans, Professors, Associate Professors, Assistant Professors, Instructors, Visiting Scientists, Research Associates,

Senior Research Associates, and Postdoctoral Fellows.

(2) Positions established to perform work on projects funded from grants.

(f) *National Defense University.* (1) Not to exceed 16 positions of senior policy analyst, GS–15, at the Strategic Concepts Development Center. Initial appointments to these positions may not exceed 6 years, but may be extended thereafter in 1-, 2-, or 3-year increments, indefinitely.

(g) *Defense Communications Agency.* (1) Not to exceed 10 positions at grades GS–10/15 to staff and support the Crisis Management Center at the White House.

(h) *Defense Systems Management College, Fort Belvoir, Va.* (1) The Provost and professors in grades GS–13 through 15.

(i) *George C. Marshall European Center for Security Studies, Garmisch, Germany.* (1) The Director, Deputy Director, and positions of professor, instructor, and lecturer at the George C. Marshall European Center for Security Studies, Garmisch, Germany, for initial employment not to exceed 3 years, which may be renewed in increments from 1 to 2 years thereafter.

(j) *Asia-Pacific Center for Security Studies, Honolulu, Hawaii.* (1) The Director, Deputy Director, Dean of Academics, Director of College, deputy department chairs, and senior positions of professor, associate professor, and research fellow within the Asia Pacific Center. Appointments may be made not to exceed 3 years and may be extended for periods not to exceed 3 years.

Section 213.3107 Department of the Army

(a)–(c) (Reserved).

(d) *U.S. Military Academy, West Point, New York.* (1) Civilian professors, instructors, teachers (except teachers at the Children's School), Cadet Social Activities Coordinator, Chapel Organist and Choir-Master, Director of Intercollegiate Athletics, Associate Director of Intercollegiate Athletics, coaches, Facility Manager, Building Manager, three Physical Therapists (Athletic Trainers), Associate Director of Admissions for Plans and Programs, Deputy Director of Alumni Affairs; and librarian when filled by an officer of the Regular Army retired from active service, and the military secretary to the Superintendent when filled by a U.S. Military Academy graduate retired as a regular commissioned officer for disability.

(e)–(f) (Reserved).

(g) *Defense Language Institute.* (1) All positions (professors, instructors, lecturers) which require proficiency in a foreign language or a knowledge of foreign language teaching methods.

(h) *Army War College, Carlisle Barracks, PA.* (1) Positions of professor, instructor, or lecturer associated with courses of instruction of at least 10 months duration for employment not to exceed 5 years, which may be renewed in 1-, 2-, 3-, 4-, or 5-year increments indefinitely thereafter.

(i) (Reserved).

(j) *U.S. Military Academy Preparatory School, Fort Monmouth, New Jersey.* (1) Positions of Academic Director, Department Head, and Instructor.

(k) *U.S. Army Command and General Staff College, Fort Leavenworth, Kansas.* (1) Positions of professor, associate professor, assistant professor, and instructor associated with courses of instruction of at least 10 months duration, for employment not to exceed up to 5 years, which may be renewed in 1, 2, 3, 4, or 5-year increments indefinitely thereafter.

Section 213.3108 Department of the Navy

(a) *General.* (1)–(14) (Reserved).

(15) Marine positions assigned to a coastal or seagoing vessel operated by a naval activity for research or training purposes.

(16) All positions necessary for the administration and maintenance of the official residence of the Vice President.

(b) *Naval Academy, Naval Postgraduate School, and Naval War College.* (1) Professors, instructors, and teachers; the Director of Academic Planning, Naval Postgraduate School; and the Librarian, Organist-Choirmaster, Registrar, the Dean of Admissions, and social counselors at the Naval Academy.

(c) *Chief of Naval Operations.* (1) One position at grade GS–12 or above that will provide technical, managerial, or administrative support on highly classified functions to the Deputy Chief of Naval Operations (Plans, Policy, and Operations).

(d) *Military Sealift Command.* (1) All positions on vessels operated by the Military Sealift Command.

(e) *Pacific Missile Range Facility, Barking Sands, Hawaii.* (1) All positions. This authority applies only to positions that must be filled pending final decision on contracting of Facility operations. No new appointments may be made under this authority after July 29, 1988.

(f) (Reserved).

(g) *Office of Naval Research.* (1) Scientific and technical positions, GS/GM–13/15, in the Office of Naval Research Asian Office in Tokyo, Japan, which covers East Asia, New Zealand and Australia. Positions are to be filled by personnel having specialized experience in scientific and/or technical disciplines of current interest to the Department of the Navy.

Section 213.3109 Department of the Air Force

(a) *Office of the Secretary.* (1) One Special Assistant in the Office of the Secretary of the Air Force. This position has advisory rather than operating duties except as operating or administrative responsibilities may be exercised in connection with the pilot studies.

(b) *General.* (1) Professional, technical, managerial and administrative positions supporting space activities, when approved by the Secretary of the Air Force.

(2) Ninety-five positions engaged in interdepartmental defense projects involving scientific and technical evaluations.

(c) Not to exceed 20 professional positions, GS–11 through GS–15, in Detachments 6 and 51, SM–ALC, Norton and McClellan Air Force Bases, California, which will provide logistic support management to specialized research and development projects.

(d) *U.S. Air Force Academy, Colorado.* (1) (Reserved).

(2) Positions of Professor, Associate Professor, Assistant Professor, and Instructor, in the Dean of Faculty, Commandant of Cadets, Director of Athletics, and Preparatory School of the United States Air Force Academy.

(e) (Reserved).

(f) *Air Force Office of Special Investigations.* (1) Not to exceed 350 positions of Criminal Investigators/Intelligence Research Specialists, GS–5 through GS–15.

(g) Not to exceed eight positions, GS–12 through 15, in Headquarters Air Force Logistics Command, DCS Material Management, Office of Special Activities, Wright-Patterson Air Force Base, Ohio, which will provide logistic support management staff guidance to classified research and development projects.

(h) *Air University, Maxwell Air Force Base, Alabama.* (1) Positions of Professor, Instructor, or Lecturer.

(i) *Air Force Institute of Technology, Wright-Patterson Air Force Base, Ohio.* (1) Civilian deans and professors.

(j) *Air Force Logistics Command.* (1) One Supervisory Logistics Management Specialist, GM–346–14, in Detachment 2, 2762 Logistics Management Squadron (Special), Greenville, Texas.

(k) One position of Supervisory Logistics Management Specialist, GS–346–15, in the 2762nd Logistics

Squadron (Special), at Wright-Patterson Air Force Base, Ohio.

(l) One position of Commander, Air National Guard Readiness Center, Andrews Air Force Base, Maryland.

Section 213.3110 Department of Justice

(a) *General.* (1) Deputy U.S. Marshals employed on an hourly basis for intermittent service.

(4) Positions at GS–15 and below on the staff of an office of a special counsel.

(3)–(5) (Reserved).

(6) Positions of Program Manager and Assistant Program Manager supporting the International Criminal Investigative Training Assistance Program in foreign countries. Initial appointments under this authority may not exceed 2 years, but may be extended for an additional period not to exceed 2 years.

(b) *Immigration and Naturalization Service.* (1) (Reserved).

(2) Not to exceed 500 positions of interpreters and language specialists, GS–1040–5/9.

(3) Not to exceed 25 positions, GS–15 and below, with proficiency in speaking, reading, and writing the Russian language and serving in the Soviet Refugee Processing Program with permanent duty location in Moscow, Russia.

(c) *Drug Enforcement Administration.* (1) (Reserved).

(2) Four hundred positions of Intelligence Research Agent and/or Intelligence Operation Specialist in the GS–132 series, grades GS–9 through GS–15.

(3) Not to exceed 200 positions of Criminal Investigator (Special Agent). New appointments may be made under this authority only at grades GS–7/11.

(d) *National Drug Intelligence Center.* All positions.

Section 213.3112 Department of the Interior

(a) *General.* (1) Technical, maintenance, and clerical positions at or below grades GS–7, WG–10, or equivalent, in the field service of the Department of the Interior, when filled by the appointment of persons who are certified as maintaining a permanent and exclusive residence within, or contiguous to, a field activity or district, and as being dependent for livelihood primarily upon employment available within the field activity of the Department.

(2) All positions on Government-owned ships or vessels operated by the Department of the Interior.

(3) Temporary or seasonal caretakers at temporarily closed camps or improved areas to maintain grounds, buildings, or other structures and prevent damages or theft of Government property. Such appointments shall not extend beyond 130 working days a year without the prior approval of OPM.

(4) Temporary, intermittent, or seasonal field assistants at GS–7, or its equivalent, and below in such areas as forestry, range management, soils, engineering, fishery and wildlife management, and with surveying parties. Employment under this authority may not exceed 180 working days a year.

(5) Temporary positions established in the field service of the Department for emergency forest and range fire prevention or suppression and blister rust control for not to exceed 180 working days a year: *Provided,* that an employee may work as many as 220 working days a year when employment beyond 180 days is required to cope with extended fire seasons or sudden emergencies such as fire, flood, storm, or other unforeseen situations involving potential loss of life or property.

(6) Persons employed in field positions, the work of which is financed jointly by the Department of the Interior and cooperating persons or organizations outside the Federal service.

(7) All positions in the Bureau of Indian Affairs and other positions in the Department of the Interior directly and primarily related to providing services to Indians when filled by the appointment of Indians. The Secretary of the Interior is responsible for defining the term ''Indian.''

(8) Temporary, intermittent, or seasonal positions at GS–7 or below in Alaska, as follows: Positions in nonprofessional mining activities, such as those of drillers, miners, caterpillar operators, and samplers. Employment under this authority shall not exceed 180 working days a year and shall be appropriate only when the activity is carried on in a remote or isolated area and there is a shortage of available candidates for the positions.

(9) Temporary, part-time, or intermittent employment of mechanics, skilled laborers, equipment operators and tradesmen on construction, repair, or maintenance work not to exceed 180 working days a year in Alaska, when the activity is carried on in a remote or isolated area and there is a shortage of available candidates for the positions.

(10) Seasonal airplane pilots and airplane mechanics in Alaska, not to exceed 180 working days a year.

(11) Temporary staff positions in the Youth Conservation Corps Centers operated by the Department of the Interior. Employment under this authority shall not exceed 11 weeks a year except with prior approval of OPM.

(12) Positions in the Youth Conservation Corps for which pay is fixed at the Federal minimum wage rate. Employment under this authority may not exceed 10 weeks.

(b) (Reserved).

(c) *Indian Arts and Crafts Board.* (1) The Executive Director.

(d) (Reserved).

(e) *Office of the Assistant Secretary, Territorial and International Affairs.* (1) (Reserved).

(2) Not to exceed four positions of Territorial Management Interns, grades GS–5, GS–7, or GS–9, when filled by territorial residents who are U.S. citizens from the Virgin Islands or Guam; U.S. nationals from American Samoa; or in the case of the Northern Marianas, will become U.S. citizens upon termination of the U.S. trusteeship. Employment under this authority may not exceed 6 months.

(3) (Reserved).

(4) Special Assistants to the Governor of American Samoa who perform specialized administrative, professional, technical, and scientific duties as members of his or her immediate staff.

(f) *National Park Service.* (1) (Reserved).

(2) Positions established for the administration of Kalaupapa National Historic Park, Molokai, Hawaii, when filled by appointment of qualified patients and Native Hawaiians, as provided by Public Law 95–565.

(3) Seven full-time permanent and 31 temporary, part-time, or intermittent positions in the Redwood National Park, California, which are needed for rehabilitation of the park, as provided by Public Law 95–250.

(4) One Special Representative of the Director.

(5) All positions in the Grand Portage National Monument, Minnesota, when filled by the appointment of recognized members of the Minnesota Chippewa Tribe.

(g) *Bureau of Reclamation.* (1) Appraisers and examiners employed on a temporary, intermittent, or part-time basis on special valuation or prospective-entrymen-review projects where knowledge of local values on conditions or other specialized qualifications not possessed by regular Bureau employees are required for successful results. Employment under this provision shall not exceed 130 working days a year in any individual case: *Provided,* that such employment may, with prior approval of OPM, be extended for not to exceed an additional 50 working days in any single year.

(h) *Office of the Deputy Assistant Secretary for Territorial Affairs.* (1) Positions of Territorial Management Interns, GS–5, when filled by persons selected by the Government of the Trust Territory of the Pacific Islands. No appointment may extend beyond 1 year.

Section 213.3113 Department of Agriculture

(a) *General.* (1) Agents employed in field positions the work of which is financed jointly by the Department and cooperating persons, organizations, or governmental agencies outside the Federal service. Except for positions for which selection is jointly made by the Department and the cooperating organization, this authority is not applicable to positions in the Agricultural Research Service or the National Agricultural Statistics Service. This authority is not applicable to the following positions in the Agricultural Marketing Service: Agricultural commodity grader (grain) and (meat), (poultry), and (dairy), agricultural commodity aid (grain), and tobacco inspection positions.

(2)–(4) (Reserved).

(5) Temporary, intermittent, or seasonal employment in the field service of the Department in positions at and below GS–7 and WG–10 in the following types of positions: Field assistants for subprofessional services; agricultural helpers, helper-leaders, and workers in the Agricultural Research Service and the Animal and Plant Health Inspection Service; and subject to prior OPM approval granted in the calendar year in which the appointment is to be made, other clerical, trades, crafts, and manual labor positions. Total employment under this subparagraph may not exceed 180 working days in a service year: *Provided,* that an employee may work as many as 220 working days in a service year when employment beyond 180 days is required to cope with extended fire seasons or sudden emergencies such as fire, flood, storm, or other unforeseen situations involving potential loss of life or property. This paragraph does not cover trades, crafts, and manual labor positions covered by paragraph (i) of § 213.3102 or positions within the Forest Service.

(6) (Reserved).

(7) Not to exceed 34 Program Assistants, whose experience acquired in positions excepted from the competitive civil service in the administration of agricultural programs at the State level is needed by the Department for the more efficient administration of its programs. No new appointment may be made under this authority after December 31, 1985.

(b)–(c) (Reserved).

(d) *Farm Service Agency.* (1) (Reserved).

(2) Members of State Committees: *Provided,* that employment under this authority shall be limited to temporary intermittent (WAE) positions whose principal duties involve administering farm programs within the State consistent with legislative and Departmental requirements and reviewing national procedures and policies for adaptation at State and local levels within established parameters. Individual appointments under this authority are for 1 year and may be extended only by the Secretary of Agriculture or his designee. Members of State Committees serve at the pleasure of the Secretary.

(e) *Rural Development.* (1) (Reserved).

(2) County committeemen to consider, recommend, and advise with respect to the Rural Development program.

(3) Temporary positions whose principal duties involve the making and servicing of natural disaster emergency loans pursuant to current statutes authorizing natural disaster emergency loans. Appointments under this provision shall not exceed 1 year unless extended for one additional period not to exceed 1 year, but may, with prior approval of OPM be further extended for additional periods not to exceed 1 year each.

(4)–(5) (served).

(6) Professional and clerical positions in the Trust Territory of the Pacific Islands when occupied by indigenous residents of the Territory to provide financial assistance pursuant to current authorizing statutes.

(f) *Agricultural Marketing Service.* (1) Positions of Agricultural Commodity Graders, Agricultural Commodity Technicians, and Agricultural Commodity Aids at grades GS–9 and below in the tobacco, dairy, and poultry commodities; Meat Acceptance Specialists, GS–11 and below; Clerks, Office Automation Clerks, and Computer Clerks at GS–5 and below; Clerk-Typists at grades GS–4 and below; and Laborers under the Wage System. Employment under this authority is limited to either 1,280 hours or 180 days in a service year.

(2) Positions of Agricultural Commodity Graders, Agricultural Commodity Technicians, and Agricultural Commodity Aids at grades GS–11 and below in the cotton, raisin, and processed fruit and vegetable commodities and the following positions in support of these commodities: Clerks, Office Automation Clerks, and Computer Clerks and Operators at GS–5 and below; Clerk-Typists at grades GS–4 and below; and, under the Federal Wage System, High Volume Instrumentation (HVI) Operators and HVI Operator Leaders at WG/WL–2 and below, respectively, Instrument Mechanics/Workers/Helpers at WG–10 and below, and Laborers. Employment under this authority may not exceed 180 days in a service year. In unforeseen situations such as bad weather or crop conditions, unanticipated plant demands, or increased imports, employees may work up to 240 days in a service year. Cotton Agricultural Commodity Graders, GS–5, may be employed as trainees for the first appointment for an initial period of 6 months for training without regard to the service year limitation.

(3) Milk Market Administrators.

(4) All positions on the staffs of the Milk Market Administrators.

(g)–(k) (Reserved).

(l) *Food Safety and Inspection Service.* (1)-(2) (Reserved).

(3) Positions of meat and poultry inspectors (veterinarians at GS–11 and below and nonveterinarians at appropriate grades below GS–11) for employment on a temporary, intermittent, or seasonal basis, not to exceed 1,280 hours a year.

(m) *Grain Inspection, Packers and Stockyards Administration.* (1) One hundred and fifty positions of Agricultural Commodity Aid (Grain), GS–2/4; 100 positions of Agricultural Commodity Technician (Grain), GS–4/7; and 60 positions of Agricultural Commodity Grader (Grain), GS–5/9, for temporary employment on a part-time, intermittent, or seasonal basis not to exceed 1,280 hours in a service year.

(n) *Alternative Agricultural Research and Commercialization Corporation.* (1) Executive Director.

Section 213.3114 Department of Commerce

(a) *General.* (1)–(2) (Reserved).

(3) Not to exceed 50 scientific and technical positions whose duties are performed primarily in the Antarctic. Incumbents of these positions may be stationed in the continental United States for periods of orientation, training, analysis of data, and report writing.

(b)–(c) (Reserved).

(d) *Bureau of the Census.* (1) Managers, supervisors, technicians, clerks, interviewers, and enumerators in the field service, for time-limited employment to conduct a census.

(2) Current Program Interviewers employed in the field service.

(e)–(h) (Reserved).

(i) *Office of the Under Secretary for International Trade.* (1) Fifteen

positions at GS–12 and above in specialized fields relating to international trade or commerce in units under the jurisdiction of the Under Secretary for International Trade. Incumbents will be assigned to advisory rather than to operating duties, except as operating and administrative responsibility may be required for the conduct of pilot studies or special projects. Employment under this authority will not exceed 2 years for an individual appointee.

(2) (Reserved).

(3) Not to exceed 15 positions in grades GS–12 through GS–15, to be filled by persons qualified as industrial or marketing specialists; who possess specialized knowledge and experience in industrial production, industrial operations and related problems, market structure and trends, retail and wholesale trade practices, distribution channels and costs, or business financing and credit procedures applicable to one or more of the current segments of U.S. industry served by the Under Secretary for International Trade, and the subordinate components of his organization which are involved in Domestic Business matters. Appointments under this authority may be made for a period of not to exceed 2 years and may, with prior approval of OPM, be extended for an additional period of 2 years.

(j) *National Oceanic and Atmospheric Administration.* (1)–(2) (Reserved).

(3) All civilian positions on vessels operated by the National Ocean Service.

(4) Temporary positions required in connection with the surveying operations of the field service of the National Ocean Service. Appointment to such positions shall not exceed 8 months in any 1 calendar year.

(k) (Reserved).

(l) *National Telecommunication and Information Administration.* (1) Seventeen professional positions in grades GS–13 through GS–15.

Section 213.3115 Department of Labor

(a) *Office of the Secretary.* (1) Chairman and five members, Employees' Compensation Appeals Board.

(2) Chairman and eight members, Benefits Review Board.

(b)–(c) (Reserved).

(d) *Employment and Training Administration.* (1) Not to exceed 10 positions of Supervisory Manpower Development Specialist and Manpower Development Specialist, GS–7/15, in the Division of Indian and Native American Programs, when filled by the appointment of persons of one-fourth or more Indian blood. These positions require direct contact with Indian tribes and communities for the development and administration of comprehensive employment and training programs.

Section 213.3116 Department of Health and Human Services

(a) *General.* (1) Intermittent positions, at GS–15 and below and WG–10 and below, on teams under the National Disaster Medical System including Disaster Medical Assistance Teams and specialty teams, to respond to disasters, emergencies, and incidents/events involving medical, mortuary and public health needs.

(b) *Public Health Service.* (1) (Reserved).

(2) Positions at Government sanatoria when filled by patients during treatment or convalescence.

(3) (Reserved).

(4) Positions concerned with problems in preventive medicine financed or participated in by the Department of Health and Human Services and a cooperating State, county, municipality, incorporated organization, or an individual in which at least one-half of the expense is contributed by the participating agency either in salaries, quarters, materials, equipment, or other necessary elements in the carrying on of the work.

(5)–(6) (Reserved).

(7) Not to exceed 50 positions associated with health screening programs for refugees.

(8) All positions in the Public Health Service and other positions in the Department of Health and Human Services directly and primarily related to providing services to Indians when filled by the appointment of Indians. The Secretary of Health and Human Services is responsible for defining the term ''Indian.''

(9) (Reserved).

(10) Health care positions of the National Health Service Corps for employment of any one individual not to exceed 4 years of service in health manpower shortage areas.

(11)–(14) (Reserved).

(15) Not to exceed 200 staff positions, GS–15 and below, in the Immigration Health Service, for an emergency staff to provide health related services to foreign entrants.

(c)–(e) (Reserved).

(f) *The President's Council on Physical Fitness.* (1) Four staff assistants.

Section 213.3117 Department of Education

(a) Positions concerned with problems in education financed and participated in by the Department of Education and a cooperating State educational agency, or university or college, in which there is joint responsibility for selection and supervision of employees, and at least one-half of the expense is contributed by the cooperating agency in salaries, quarters, materials, equipment, or other necessary elements in the carrying on of the work.

Section 213.3124 Board of Governors, Federal Reserve System

(a) All positions.

Section 213.3127 Department of Veterans Affairs

(a) *Construction Division.* (1) Temporary construction workers paid from ''purchase and hire'' funds and appointed for not to exceed the duration of a construction project.

(b) Not to exceed 400 positions of rehabilitation counselors, GS–3 through GS–11, in Alcoholism Treatment Units and Drug Dependence Treatment Centers, when filled by former patients.

(c) *Board of Veterans' Appeals.* (1) Positions, GS–15, when filled by a member of the Board. Except as provided by section 201(d) of Public Law 100–687, appointments under this authority shall be for a term of 9 years, and may be renewed.

(2) Positions, GS–15, when filled by a non-member of the Board who is awaiting Presidential approval for appointment as a Board member.

(d) Not to exceed 600 positions at grades GS–3 through GS–11, involved in the Department's Vietnam Era Veterans Readjustment Counseling Service.

Section 213.3132 Small Business Administration

(a) When the President under 42 U.S.C. 1855–1855g, the Secretary of Agriculture under 7 U.S.C. 1961, or the Small Business Administration under 15 U.S.C. 636(b)(1) declares an area to be a disaster area, positions filled by time-limited appointment of employees to make and administer disaster loans in the area under the Small Business Act, as amended. Service under this authority may not exceed 4 years, and no more than 2 years may be spent on a single disaster. Exception to this time limit may only be made with prior Office approval. Appointments under this authority may not be used to extend the 2-year service limit contained in paragraph (b) below. No one may be appointed under this authority to positions engaged in long-term maintenance of loan portfolios.

(b) When the President under 42 U.S.C. 1855–1855g, the Secretary of Agriculture under 7 U.S.C. 1961, or the Small Business Administration under

15 U.S.C. 636(b)(1) declares an area to be a disaster area, positions filled by time-limited appointment of employees to make and administer disaster loans in that area under the Small Business Act, as amended. No one may serve under this authority for more than an aggregate of 2 years without a break in service of at least 6 months. Persons who have had more than 2 years of service under paragraph (a) of this section must have a break in service of at least 8 months following such service before appointment under this authority. No one may be appointed under this authority to positions engaged in long-term maintenance of loan portfolios.

Section 213.3133 Federal Deposit Insurance Corporation

(a)–(b) (Reserved).

(c) Temporary positions located at closed banks or savings and loan institutions that are concerned with liquidating the assets of the institutions, liquidating loans to the institutions, or paying the depositors of closed insured institutions. New appointments may be made under this authority only during the 60 days immediately following the institution's closing date. Such appointments may not exceed 1 year, but may be extended for not to exceed 1 additional year.

Section 213.3136 U.S. Soldiers' and Airmen's Home

(a) (Reserved).

(b) Positions when filled by member-residents of the Home.

Section 213.3138 Federal Communications Commission

(a) Fifteen positions of Telecommunications Policy Analyst, GS–301–13/14/15. Initial appointment to these positions will be for a period of not to exceed 2 years with provision for two 1-year extensions. No new appointments may be made under this authority after May 31, 1998.

Section 213.3142 Export-Import Bank of the United States

(a) One Special Assistant to the Board of Directors, grade GS–14 and above.

Section 213.3146 Selective Service System

(a) State Directors.

Section 213.3148 National Aeronautics and Space Administration

(a) One hundred and fifty alien scientists having special qualifications in the fields of aeronautical and space research where such employment is deemed by the Administrator of the National Aeronautics and Space Administration to be necessary in the public interest.

Section 213.3155 Social Security Administration

(a) Six positions of Social Insurance Representative in the district offices of the Social Security Administration in the State of Arizona when filled by the appointment of persons of one-fourth or more Indian blood.

(b) Seven positions of Social Insurance Representative in the district offices of the Social Security Administration in the State of New Mexico when filled by the appointment of persons of one-fourth or more Indian blood.

(c) Two positions of Social Insurance Representative in the district offices of the Social Security Administration in the State of Alaska when filled by the appointments of persons of one-fourth or more Alaskan Native blood (Eskimos, Indians, or Aleuts).

Section 213.3162 The President's Crime Prevention Council

(a) Up to 7 positions established in the President's Crime Prevention Council office created by the Violent Crime Control and Law Enforcement Act of 1994. No new appointments may be made under this authority after March 31, 1998.

Section 213.3165 Chemical Safety and Hazard Investigation Board

(a) Up to 37 positions established to create the Chemical Safety and Hazard Investigation Board. No new appointments may be made under this authority after December 31, 2000.

Section 213.3166 Court Services and Offender Supervision Agency of the District of Columbia

(a) All positions, except for the Director, established to create the Court Services and Offender Supervision Agency of the District of Columbia. No new appointments may be made under this authority after September 30, 2001.

Section 213.3174 Smithsonian Institution

(a) (Reserved).

(b) All positions located in Panama which are part of or which support the Smithsonian Tropical Research Institute.

(c) Positions at GS–15 and below in the National Museum of the American Indian requiring knowledge of, and experience in, tribal customs and culture. Such positions comprise approximately 10 percent of the Museum's positions and, generally, do not include secretarial, clerical, administrative, or program support positions.

Section 213.3175 Woodrow Wilson International Center for Scholars

(a) One Asian Studies Program Administrator, one International Security Studies Program Administrator, one Latin American Program Administrator, one Russian Studies Program Administrator, one West European Program Administrator, one Environmental Change & Security Studies Program Administrator, one United States Studies Program Administrator, and two Social Science Program Administrators.

Section 213.3178 Community Development Financial Institutions Fund

(a) All positions in the Fund and positions created for the purpose of establishing the Fund's operations in accordance with the Community Development Banking and Financial Institutions Act of 1994, except for any positions required by the Act to be filled by competitive appointment. No new appointments may be made under this authority after September 23, 1998.

Section 213.3180 Utah Reclamation and Conservation Commission

(a) Executive Director.

Section 213.3182 National Foundation on the Arts and the Humanities

(a) *National Endowment for the Arts.* (1) Artistic and related positions at grades GS–13 through GS–15 engaged in the review, evaluation and administration of applications and grants supporting the arts, related research and assessment, policy and program development, arts education, access programs and advocacy or evaluation of critical arts projects and outreach programs. Duties require artistic stature, in-depth knowledge of arts disciplines and/or artistic-related leadership qualities.

Section 213.3190 African Development Foundation

(a) One Enterprise Development Fund Manager. Appointment authority is limited to four years unless extended by the Office.

Section 213.3191 Office of Personnel Management

(a)–(c) (Reserved).

(d) Part-time and intermittent positions of test examiners at grades GS–8 and below.

Section 213.3194 Department of Transportation

(a) *U.S. Coast Guard.* (1) (Reserved).

(2) Lamplighters.

(3) Professors, Associate Professors, Assistant Professors, Instructors, one Principal Librarian, one Cadet Hostess, and one Psychologist (Counseling) at the Coast Guard Academy, New London, Connecticut.

(b)–(d) (Reserved).

(e) *Maritime Administration.* (1)–(2) (Reserved).

(3) All positions on Government-owned vessels or those bareboats chartered to the Government and operated by or for the Maritime Administration.

(4)–(5) (Reserved).

(6) U.S. Merchant Marine Academy, positions of: Professors, Instructors, and Teachers, including heads of Departments of Physical Education and Athletics, Humanities, Mathematics and Science, Maritime Law and Economics, Nautical Science, and Engineering; Coordinator of Shipboard Training; the Commandant of Midshipmen, the Assistant Commandant of Midshipmen; Director of Music; three Battalion Officers; three Regimental Affairs Officers; and one Training Administrator.

(7) U.S. Merchant Marine Academy positions of: Associate Dean; Registrar; Director of Admissions; Assistant Director of Admissions; Director, Office of External Affairs; Placement Officer; Administrative Librarian; Shipboard Training Assistant; three Academy Training Representatives; and one Education Program Assistant.

Section 213.3195 Federal Emergency Management Agency

(a) Field positions at grades GS–15 and below, or equivalent, which are engaged in work directly related to unique response efforts to environmental emergencies not covered by the Disaster Relief Act of 1974, Public Law 93–288, as amended. Employment under this authority may not exceed 36 months on any single emergency. Persons may not be employed under this authority for long-term duties or for work not directly necessitated by the emergency response effort.

(b) Not to exceed 30 positions at grades GS–15 and below in the Offices of Executive Administration, General Counsel, Inspector General, Comptroller, Public Affairs, Personnel, Acquisition Management, and the State and Local Program and Support Directorate which are engaged in work directly related to unique response efforts to environmental emergencies not covered by the Disaster Relief Act of 1974, Public Law 93–288, as amended. Employment under this authority may not exceed 36 months on any single emergency, or for long-term duties or work not directly necessitated by the emergency response effort. No one may be reappointed under this authority for service in connection with a different emergency unless at least 6 months have elapsed since the individual's latest appointment under this authority.

(c) Not to exceed 350 professional and technical positions at grades GS–5 through GS–15, or equivalent, in Mobile Emergency Response Support Detachments (MERS).

Section 213.3199 Temporary Organizations

(a) Positions on the staffs of temporary boards and commissions which are established by law or Executive order for specified periods not to exceed 4 years to perform specific projects. A temporary board or commission originally established for less than 4 years and subsequently extended may continue to fill its staff positions under this authority as long as its total life, including extension(s), does not exceed 4 years. No board or commission may use this authority for more than 4 years to make appointments and position changes unless prior approval of the Office is obtained.

(b) Positions on the staffs of temporary organizations established within continuing agencies when all of the following conditions are met: (1) The temporary organization is established by an authority outside the agency, usually by law or Executive order; (2) the temporary organization is established for an initial period of 4 years or less and, if subsequently extended, its total life including extension(s) will not exceed 4 years; (3) the work to be performed by the temporary organization is outside the agency's continuing responsibilities; and (4) the positions filled under this authority are those for which other staffing resources or authorities are not available within the agency. An agency may use this authority to fill positions in organizations which do not meet all of the above conditions or to make appointments and position changes in a single organization during a period longer than 4 years only with prior approval of the Office.

Schedule B

Section 213.3202 Entire Executive Civil Service

(a) *Student Educational Employment Program—Student Temporary Employment Program.* (1) Students may be appointed to the Student Temporary Employment Program if they are pursuing any of the following educational programs:

(i) High School Diploma or General Equivalency Diploma (GED);

(ii) Vocational/Technical certificate;

(iii) Associate degree;

(iv) Baccalaureate degree;

(v) Graduate degree; or

(vi) Professional degree

* * * * *

[The remaining text of provisions pertaining to the Student Temporary Employment Program can be found in 5 CFR 213.3202(a).]

(b) *Student Educational Employment Program—Student Career Experience Program.* (1)(i) Students may be appointed to the Student Career Experience Program if they are pursuing any of the following educational programs:

(A) High school diploma or General Equivalency Diploma (GED);

(B) Vocational/Technical certificate;

(C) Associate degree;

(D) Baccalaureate degree;

(E) Graduate degree; or

(F) Professional degree.

(ii) Student participants in the Harry S. Truman Foundation Scholarship Program under the provision of Public Law 93–842 are eligible for appointments under the Student Career Experience Program.

[The remaining text of provisions pertaining to the Student Career Experience Program can be found in 5 CFR 213.3202(b).]

* * * * *

(c)–(i) (Reserved).

(j) Special executive development positions established in connection with Senior Executive Service candidate development programs which have been approved by OPM. A Federal agency may make new appointments under this authority for any period of employment not exceeding 3 years for one individual.

(k)–(l) (Reserved).

(m) Positions when filled under any of the following conditions: (1) Appointment at grades GS–15 and above, or equivalent, in the same or a different agency without a break in service from a career appointment in the Senior Executive Service (SES) of an individual who:

(i) Has completed the SES probationary period;

(ii) Has been removed from the SES because of less than fully successful executive performance or a reduction in force; and

(iii) Is entitled to be placed in another civil service position under 5 U.S.C. 3594(b).

(2) Appointment in a different agency without a break in service of an

individual originally appointed under paragraph (m)(1).

(3) Reassignment, promotion, or demotion within the same agency of an individual appointed under this authority.

(n) Positions when filled by preference eligibles or veterans who have been separated from the armed forces under honorable conditions after 3 years or more of continuous active service and who, in accordance with 5 U.S.C. 3304(f) (Pub. L. 105–339), applied for these positions under merit promotion procedures when applications were being accepted by the agency from individuals outside its own workforce. These veterans may be promoted, demoted, or reassigned, as appropriate, to other positions within the agency but would remain employed under this excepted authority as long as there is no break in service. No new appointments may be made under this authority after November 30, 1999.

(o) *The Federal Career Intern Program* (1) *Appointments.* Appointments made under the Federal Career Intern Program may not exceed 2 years, except as described in paragraph (o)(2) of this section. Initial appointments shall be made to a position at the grades GS–5, 7, or 9 (and equivalent) or other trainee levels appropriate for the program. Agencies must request OPM approval to cover additional grades to meet unique or specialized needs. Agencies will use part 302 of this chapter when making appointments under this Program.

(2) Extensions. (i) Agencies must request, in writing, OPM approval to extend internships for up to 1 additional year beyond the authorized 2 years for additional training and/or developmental activities.

(ii) Agencies are delegated the authority to extend, without prior OPM approval, 2-year internships for up to an additional 120 days to cover rare or unusual circumstances, and where agencies have established criteria for approving extensions.

* * * * *

[The remaining text of provisions pertaining to The Federal Career Intern Program can be found in 5 CFR 213.3202(o).]

Section 213.3203 Executive Office of the President

(a) (Reserved).

(b) *Office of the Special Representative for Trade Negotiations.* (1) Seventeen positions of economist at grades GS–12 through GS–15.

Section 213.3204 Department of State

(a)–(c) (Reserved).

(d) Fourteen positions on the household staff of the President's Guest House (Blair and Blair-Lee Houses).

(e) (Reserved).

(f) Scientific, professional, and technical positions at grades GS–12 to GS–15 when filled by persons having special qualifications in foreign policy matters. Total employment under this authority may not exceed 4 years.

Section 213.3205 Department of the Treasury

(a) Positions of Deputy Comptroller of the Currency, Chief National Bank Examiner, Assistant Chief National Bank Examiner, Regional Administrator of National Banks, Deputy Regional Administrator of National Banks, Assistant to the Comptroller of the Currency, National Bank Examiner, Associate National Bank Examiner, and Assistant National Bank Examiner, whose salaries are paid from assessments against national banks and other financial institutions.

(b)–(c) (Reserved).

(d) Positions concerned with the protection of the life and safety of the President and members of his immediate family, or other persons for whom similar protective services are prescribed by law, when filled in accordance with special appointment procedures approved by OPM. Service under this authority may not exceed (1) a total of 4 years; or (2) 120 days following completion of the service required for conversion under Executive Order 11203, whichever comes first.

(e) Positions, grades GS–5 through 12, of Treasury Enforcement Agent in the Bureau of Alcohol, Tobacco, and Firearms; and Treasury Enforcement Agent, Pilot, Marine Enforcement Officer, and Aviation Enforcement Officer in the U.S. Customs Service. Service under this authority may not exceed 3 years and 120 days.

Section 213.3206 Department of Defense

(a) *Office of the Secretary.* (1) (Reserved).

(2) Professional positions at GS–11 through GS–15 involving systems, costs, and economic analysis functions in the Office of the Assistant Secretary (Program Analysis and Evaluation); and in the Office of the Deputy Assistant Secretary (Systems Policy and Information) in the Office of the Assistant Secretary (Comptroller).

(3)–(4) (Reserved).

(5) Four Net Assessment Analysts.

(b) *Interdepartmental activities.* (1) Six positions to provide general administration, general art and information, photography, and/or visual information support to the White House Photographic Service.

(2) Eight positions, GS–15 or below, in the White House Military Office, providing support for airlift operations, special events, security, and/or administrative services to the Office of the President.

(c) *National Defense University.* (1) Sixty-one positions of Professor, GS–13/15, for employment of any one individual on an initial appointment not to exceed 3 years, which may be renewed in any increment from 1 to 6 years indefinitely thereafter.

(d) *General.* (1) One position of Law Enforcement Liaison Officer (Drugs), GS–301–15, U.S. European Command.

(2) Acquisition positions at grades GS–5 through GS–11, whose incumbents have successfully completed the required course of education as participants in the Department of Defense scholarship program authorized under 10 U.S.C. 1744.

(e) *Office of the Inspector General.* (1) Positions of Criminal Investigator, GS–1811–5/15.

(f) *Department of Defense Polygraph Institute, Fort McClellan, Alabama.* (1) One Director, GM–15.

(g) *Defense Security Assistance Agency.* All faculty members with instructor and research duties at the Defense Institute of Security Assistance Management, Wright Patterson Air Force Base, Dayton, Ohio. Individual appointments under this authority will be for an initial 3-year period, which may be followed by an appointment of indefinite duration.

Section 213.3207 Department of the Army

(a) *U.S. Army Command and General Staff College.* (1) Seven positions of professors, instructors, and education specialists. Total employment of any individual under this authority may not exceed 4 years.

Section 213.3208 Department of the Navy

(a) *Naval Underwater Systems Center, New London, Connecticut.* (1) One position of Oceanographer, grade GS–14, to function as project director and manager for research in the weapons systems applications of ocean eddies.

(b) All civilian faculty positions of professors, instructors, and teachers on the staff of the Armed Forces Staff College, Norfolk, Virginia.

(c) One Director and four Research Psychologists at the professor or GS–15 level in the Defense Personnel Security Research and Education Center.

(d) All civilian professor positions at the Marine Corps Command and Staff College.

(e) One position of Staff Assistant, GS–301–15, whose incumbent will manage the Navy's Executive Dining facilities at the Pentagon.

(f) One position of Housing Management Specialist, GM–1173–14, involved with the Bachelor Quarters Management Study. No new appointments may be made under this authority after February 29, 1992.

Section 213.3209 Department of the Air Force

(a) Not to exceed six interdisciplinary positions for the Airpower Research Institute at the Air University, Maxwell Air Force Base, Alabama, for employment to complete studies proposed by candidates and acceptable to the Air Force. Initial appointments are made not to exceed 3 years, with an option to renew or extend the appointments in increments of 1, 2, or 3 years indefinitely thereafter.

(b)–(c) (Reserved).

(d) Positions of Instructor or professional academic staff at the Air University, associated with courses of instruction of varying durations, for employment not to exceed 3 years, which may be renewed for an indefinite period thereafter.

(e) One position of Director of Development and Alumni Programs, GS–301–13, with the U.S. Air Force Academy, Colorado.

Section 213.3210 Department of Justice

(a) Criminal Investigator (Special Agent) positions in the Drug Enforcement Administration. New appointments may be made under this authority only at grades GS–5 through 11. Service under the authority may not exceed 4 years. Appointments made under this authority may be converted to career or career-conditional appointments under the provisions of Executive Order 12230, subject to conditions agreed upon between the Department and OPM.

(b) (Reserved).

(c) Not to exceed 400 positions at grades GS–5 through 15 assigned to regional task forces established to conduct special investigations to combat drug trafficking and organized crime.

(d) (Reserved).

(e) Positions, other than secretarial, GS–6 through GS–15, requiring knowledge of the bankruptcy process, on the staff of the offices of United States Trustees or the Executive Office for U.S. Trustees.

Section 213.3213 Department of Agriculture

(a) *Foreign Agricultural Service.* (1) Positions of a project nature involved in international technical assistance activities. Service under this authority may not exceed 5 years on a single project for any individual unless delayed completion of a project justifies an extension up to but not exceeding 2 years.

(b) *General.* (1) Temporary positions of professional Research Scientists, GS–15 or below, in the Agricultural Research Service and the Forest Service, when such positions are established to support the Research Associateship Program and are filled by persons having a doctoral degree in an appropriate field of study for research activities of mutual interest to appointees and the agency. Appointments are limited to proposals approved by the appropriate Administrator. Appointments may be made for initial periods not to exceed 2 years and may be extended for up to 2 additional years. Extensions beyond 4 years, up to a maximum of 2 additional years, may be granted, but only in very rare and unusual circumstances, as determined by the Personnel Officer, Agricultural Research Service, or the Personnel Officer, Forest Service.

(2) Not to exceed 55 Executive Director positions, GM–301–14/15, with the State Rural Development Councils in support of the Presidential Rural Development Initiative.

Section 213.3214 Department of Commerce

(a) *Bureau of the Census.* (1) (Reserved).

(2) Not to exceed 50 Community Services Specialist positions at the equivalent of GS–5 through GS–12.

(3) Not to exceed 300 Community Awareness Specialist positions at the equivalent of GS–7 through GS–12. Employment under this authority may not exceed December 31, 1992. (b)–(c) (Reserved).

(d) *National Telecommunications and Information Administration.* (1) Not to exceed 10 positions of Telecommunications Policy Analysts, grades GS–11 through 15. Employment under this authority may not exceed 2 years.

Section 213.3215 Department of Labor

(a) Chairman, two Members, and one Alternate Member, Administrative Review Board.

(b) (Reserved).

(c) *Bureau of International Labor Affairs.* (1) Positions in the Office of Foreign Relations, which are paid by outside funding sources under contracts for specific international labor market technical assistance projects. Appointments under this authority may not be extended beyond the expiration date of the project.

Section 213.3217 Department of Education

(a) Seventy-five positions, not in excess of GS–13, of a professional or analytical nature when filled by persons, other than college faculty members or candidates working toward college degrees, who are participating in midcareer development programs authorized by Federal statute or regulation, or sponsored by private nonprofit organizations, when a period of work experience is a requirement for completion of an organized study program. Employment under this authority shall not exceed 1 year.

(b) Fifty positions, GS–7 through GS–11, concerned with advising on education policies, practices, and procedures under unusual and abnormal conditions. Persons employed under this provision must be bona fide elementary school and high school teachers. Appointments under this authority may be made for a period of not to exceed 1 year, and may, with the prior approval of the Office of Personnel Management, be extended for an additional period of 1 year.

Section 213.3227 Department of Veterans Affairs

(a) Not to exceed 800 principal investigatory, scientific, professional, and technical positions at grades GS–11 and above in the medical research program.

(b) Not to exceed 25 Criminal Investigator (Undercover) positions, GS–1811, in grades 5 through 12, conducting undercover investigations in the Veterans Health Administration supervised by the VA, Office of Inspector General. Initial appointments shall be greater than 1 year, but not to exceed 4 years and may be extended indefinitely in 1-year increments.

Section 213.3236 U.S. Soldiers' and Airmen's Home

(a) (Reserved).

(b) Director, Health Care Services; Director, Member Services; Director, Logistics; and Director, Plans and Programs.

Section 213.3240 National Archives and Records Administration

(a) Executive Director, National Historical Publications and Records Commission.

Section 213.3248 National Aeronautics and Space Administration

(a) Not to exceed 40 positions of Command Pilot, Pilot, and Mission Specialist candidates at grades GS–7 through 15 in the Space Shuttle Astronaut program. Employment under this authority may not exceed 3 years.

Section 213.3274 Smithsonian Institution

(a) (Reserved).

(b) *Freer Gallery of Art.* (1) Not to exceed four positions of Oriental Art Restoration Specialist at grades GS–9 through GS–15.

Section 213.3276 Appalachian Regional Commission

(a) Two Program Coordinators.

Section 213.3278 Armed Forces Retirement Home

(a) *Naval Home, Gulfport, Mississippi.* (1) One Resource Management Officer position and one Public Works Officer position, GS/GM–15 and below.

Section 213.3282 National Foundation on the Arts and the Humanities

(a) (Reserved).

(b) *National Endowment for the Humanities.* (1) Professional positions at grades GS–11 through GS–15 engaged in the review, evaluation, and administration of grants supporting scholarship, education, and public programs in the humanities, the duties of which require indepth knowledge of a discipline of the humanities.

Section 213.3285 Pennsylvania Avenue Development Corporation

(a) One position of Civil Engineer (Construction Manager).

Section 213.3291 Office of Personnel Management

(a) Not to exceed eight positions of Associate Director at the Executive Seminar Centers at grades GS–13 and GS–14. Appointments may be made for any period up to 3 years and may be extended without prior approval for any individual. Not more than half of the authorized faculty positions at any one Executive Seminar Center may be filled under this authority.

(b) Twelve positions of faculty members at grades GS–13 through 15, at the Federal Executive Institute. Initial appointments under this authority may be made for any period up to 3 years and may be extended in 1-, 2-, or 3-year increments indefinitely thereafter.

Schedule C

Section 213.3303 Executive Office of the President

Council of Economic Advisers

CEA 1 Confidential Assistant to the Chairman
CEA 4 Confidential Assistant to the Chairman
CEA 5 Administrative Operations Assistant to a Member
CEA 6 Administrative Operations Assistant to a Member

Office of Management and Budget

OMB 139 Confidential Assistant to the Executive Associate Director
OMB 140 Deputy to the Associate Director for Legislative Affairs (House)
OMB 143 Public Affairs Specialist to the Associate Director for Communications
OMB 147 Executive Assistant to the Director, Office of Management and Budget

Office of National Drug Control Policy

ONDCP 83 Chief, Press Relations to the Director, Office of National Drug Control Policy
ONDCP 87 Confidential Administrative Assistant to the Deputy Director, Office of National Drug Control Policy

Office of the United States Trade Representative

USTR 70 Deputy Assistant U.S. Trade Representative for Congressional Affairs to the Assistant U.S. Trade Representative
USTR 72 Confidential Assistant to the U.S. Trade Representative
USTR 74 Special Assistant to the U.S. Trade Representative

Official Residence of the Vice President

ORVP 1 Residence Manager and Social Secretary to the Assistant to the Vice President and Chief of Staff to Mrs. Cheney

Section 213.3304 Department of State

ST 104 Special Assistant to the Under Secretary (Director)
ST 115 Staff Director, Fulbright Foreign Scholarship Fund to the Assistant Secretary, Education and Cultural Affairs
ST 399 Confidential Assistant to the Secretary of State
ST 516 Foreign Affairs Officer to the Deputy Director

Section 213.3305 Department of the Treasury

TREA 250 Director, Public Affairs to the Deputy Assistant Secretary (Public Affairs)
TREA 317 Public Affairs Specialist to the Director, Public Affairs
TREA 380 Deputy to the Assistant Secretary, Legislative Affairs
TREA 391 Deputy Director to the Director of Scheduling
TREA 411 Special Assistant to the Assistant Secretary for Public Affairs
TREA 423 Special Assistant to the Director of Scheduling
TREA 428 Deputy Assistant Secretary (Public Liaison) to the Assistant Secretary (Public Affairs)

Section 213.3306 Department of Defense

DOD 22 Defense Fellow to the Special Assistant to the Secretary of Defense for White House Liaison
DOD 33 Personal Secretary to the Deputy Secretary of Defense
DOD 271 Private Secretary to the Assistant Secretary of Defense (Reserve Affairs)
DOD 279 Personal and Confidential Assistant to the Director Operational Test and Evaluation
DOD 300 Confidential Assistant to the Under Secretary (Acquisition and Technology)
DOD 312 Director, Cooperative Threat Reduction to the Assistant Secretary of Defense (Strategy and Threat Reduction)
DOD 319 Confidential Assistant to the Secretary of Defense
DOD 332 Personal and Confidential Assistant to the Assistant Secretary of Defense (Regional Security)
DOD 368 Personal and Confidential Assistant to the Assistant Secretary of Defense for Legislative Affairs
DOD 459 Public Affairs Specialist to the Assistant to the Secretary of Defense for Public Affairs
DOD 473 Personal and Confidential Assistant to the Assistant Secretary of Defense for Special Operations and Low Intensity Conflict
DOD 480 Executive Assistant to the Assistant Secretary of Defense (Strategy Requirements and Resources)
DOD 488 Personal and Confidential Assistant to the Under Secretary of Defense (Comptroller)
DOD 519 Private Secretary to the Assistant Secretary of Defense (Regional Security Affairs)
DOD 578 Personal and Confidential Assistant to the Under Secretary of Defense (Policy)
DOD 609 Private Secretary to the Deputy Secretary of Defense
DOD 611 Personal and Confidential Assistant to the Secretary of Defense
DOD 613 Staff Assistant to the Secretary of Defense

DOD 636 Civilian Executive Assistant to the Chairman, Joint Chiefs of Staff
DOD 649 Confidential Assistant to the Assistant Secretary of Defense for Health Affairs
DOD 663 Public Affairs Specialist to the Deputy Assistant Secretary for Communications
DOD 671 Confidential Assistant to the Director, Defense Research and Engineering
DOD 680 Confidential Assistant to the Deputy Secretary of Defense
DOD 682 Confidential Assistant to the Assistant Secretary of Defense for Public Affairs

Section 213.3307 Department of the Army (DOD)

ARMY 1 Executive Staff Assistant to the Secretary
ARMY 17 Secretary (Office Automation) to the Assistant Secretary of the Army (Civil Works)
ARMY 21 Secretary (Office Automation) to the General Counsel of the Army
ARMY 55 Secretary (Office Automation) to the Assistant Secretary of the Army (Financial Management)
ARMY 77 Secretary (Office Automation) to the Assistant Secretary of the Army for Research and Development and Acquisition

Section 213.3308 Department of the Navy (DOD)

NAV 56 Staff Assistant to the Assistant Secretary of the Navy (Financial Management)
NAV 69 Staff Assistant to the Under Secretary of the Navy
NAV 71 Special Assistant to the Secretary of the Navy

Section 213.3309 Department of the Air Force (DOD)

AF 6 Secretary (Steno) to the Assistant Secretary (Manpower and Reserve Affairs, Installation and Environment)
AF 8 Secretary (Steno/OA) to the General Counsel of the Air Force

Section 213.3310 Department of Justice

JUS 144 Special Assistant to the Solicitor General
JUS 184 Special Assistant to the Deputy Attorney General
JUS 190 Counsel to the Assistant Attorney General, Office of Policy Development
JUS 211 Secretary (Office Automation) to the United States Attorney, Nevada
JUS 217 Attorney Advisor to the Assistant Attorney General, Office of Justice Programs
JUS 242 Attorney Advisor to the Assistant Attorney General, Civil Division
JUS 277 Assistant for Scheduling to the Attorney General
JUS 282 Policy Advisor to the Assistant Attorney General, Office of Policy Development
JUS 343 Assistant to the Attorney General to the Attorney General
JUS 367 Confidential Assistant to the Attorney General
JUS 418 Secretary (OA) to the U.S. Attorney, District of Nebraska
JUS 448 Secretary (OA) to the U.S. Attorney, Oklahoma City

Section 213.3312 Department of the Interior

INT 375 Special Assistant to the Assistant Secretary for Fish, Wildlife and Parks
INT 467 Special Assistant to the Director, Office of External Affairs
INT 479 Special Assistant to the Director of Minerals Management Service
INT 490 Special Assistant (Advance) to the Deputy Chief of Staff
INT 538 Special Executive Assistant to the Secretary of the Interior
INT 547 Press Secretary to the Director of Communications
INT 549 Special Assistant to the Deputy Chief of Staff
INT 551 Special Assistant for Scheduling and Advance to the Deputy Chief of Staff
INT 553 Special Assistant to the Director, Intergovernmental Affairs
INT 557 Director of Scheduling and Advance to the Deputy Chief of Staff
INT 559 Special Assistant for Scheduling and Advance to the Deputy Chief of Staff
INT 560 Associate Director to the Deputy Chief of Staff
INT 561 Special Assistant to the Secretary for Alaska to the Chief of Staff
INT 565 White House Liaison to the Deputy Chief of Staff

Section 213.3313 Department of Agriculture

AGR 100 Special Assistant to the Under Secretary for Natural Resources and Environment
AGR 103 Special Assistant to the Under Secretary for Farm and Foreign Agricultural Service
AGR 275 Confidential Assistant to the Assistant Secretary for Congressional Relations
AGR 285 Confidential Assistant to the Under Secretary for Food, Nutrition and Consumer Services
AGR 313 Special Assistant to the Administrator, Rural Housing Service
AGR 427 Confidential Assistant to the Deputy Secretary
AGR 556 Confidential Assistant to the Administrator, Animal and Plant Health Inspection Service
AGR 564 Confidential Assistant to the Under Secretary for Research, Education and Economics
AGR 566 Confidential Assistant to the Director, Legislative Affairs and Public Affairs Staff

Section 213.3314 Department of Commerce

COM 5 Special Assistant to the Director, Office of White House Liaison
COM 289 Intergovernmental Affairs Specialist to the Deputy Assistant Secretary for Intergovernmental Affairs
COM 393 Legislative Specialist for Technology and Telecommunications to the Assistant Secretary for Legislative and Intergovernmental Affairs
COM 394 Deputy Director, to the Director, Office of Public Affairs
COM 443 Director, Office of External Affairs to the Secretary of Commerce
COM 490 Director of Scheduling to the Director, Office of External Affairs
COM 550 Legislative Specialist for National Oceanic and Atmospheric Administration and Environment to the Assistant Secretary for Legislative and Intergovernmental Affairs
COM 648 Press Secretary to the Director of Public Affairs
COM 662 Special Assistant to the Under Secretary for International Trade Administration
COM 664 Special Assistant to the Assistant Secretary of Commerce, Director General of the U.S. and Foreign Commercial Service

Section 213.3315 Department of Labor

LAB 55 Research Assistant to the Assistant Secretary for Congressional and Intergovernmental Affairs
LAB 93 Special Assistant for Scheduling to the Chief of Staff
LAB 94 Special Assistant to the Director of Scheduling
LAB 150 Staff Assistant to the Secretary of Labor
LAB 160 Director of Scheduling and Advance to the Secretary of Labor
LAB 170 Confidential Assistant to the Executive Secretariat

LAB 174 Staff Assistant to the Secretary of Labor
LAB 177 Special Assistant to the Director of Faith Based and Community Initiatives
LAB 182 Special Assistant to the Deputy Secretary of Labor
LAB 205 Senior Legislative Officer to the Assistant Secretary for Congressional and Intergovernmental Affairs
LAB 211 Staff Assistant to the Executive Secretary
LAB 218 Staff Assistant to the Assistant Secretary, Office of Congressional and Intergovernmental Affairs
LAB 222 Staff Assistant to the White House Liaison
LAB 230 Special Assistant to the Secretary of Labor
LAB 231 Staff Assistant to the Chief of Staff
LAB 239 White House Liaison to the Secretary of Labor
LAB 241 Special Assistant to the Assistant Secretary for Public Affairs
LAB 247 Research Assistant to the Assistant Secretary for Congressional and Intergovernmental Affairs
LAB 248 Special Assistant to the Director of Scheduling and Advance
LAB 252 Speech Writer to the Assistant Secretary for Public Affairs
LAB 253 Deputy Chief of Staff to the Chief of Staff
LAB 260 Special Assistant to the Director of Scheduling and Advance

Section 213.3316 Department of Health and Human Services

HHS 315 Special Assistant to the Director, Office of Intergovernmental Affairs
HHS 320 Special Assistant to the Assistant Secretary for Planning and Education
HHS 419 Special Assistant to the Secretary of Health and Human Services
HHS 527 Confidential Assistant (Scheduling) to the Director of Scheduling
HHS 534 Confidential Assistant to the Executive Secretary
HHS 632 Special Outreach Coordinator to the Deputy Assistant Secretary for Public Affair (Policy and Strategy)

Section 213.3317 Department of Education

EDU 1 Confidential Assistant to the Chief of Staff
EDU 2 Deputy Assistant Secretary to the Assistant Secretary, Office of Legislation and Congressional Affairs
EDU 3 Special Assistant (White House Liaison) to the Chief of Staff
EDU 4 Confidential Assistant to the Special Assistant (White House Liaison)
EDU 5 Special Assistant to the Chief of Staff
EDU 6 Confidential Assistant to the Chief of Staff
EDU 7 Confidential Assistant to the Director, Scheduling and Briefing Staff
EDU 9 Confidential Assistant to the Director, Office of Public Affairs
EDU 10 Staff Assistant to the Director, Office of Public Affairs
EDU 11 Steward to the Chief of Staff
EDU 12 Confidential Assistant to the Director, Scheduling and Briefing Staff
EDU 14 Special Assistant to the Assistant Secretary for Intergovernmental and Interagency Affairs
EDU 15 Confidential Assistant to the Director, Office of Public Affairs
EDU 16 Confidential Assistant to the Chief of Staff

Section 213.3318 Environmental Protection Agency

EPA 5 Director, Office of Communications to the Associate Administrator for Communications, Education and Media Relations
EPA 10 Special Assistant to the Associate Administrator for Communications, Education and Media Relations
EPA 14 Special Assistant to the Associate Administrator for Congressional and Intergovernmental Relations
EPA 18 Special Assistant to the Administrator
EPA 19 Special Assistant to the Administrator

Section 213.3323 Federal Communications Commission

FCC 1 Chief, Consumer Information Bureau to the Chairman, Federal Communications Commission

Section 213.3325 United States Tax Court

TCOUS 42 Secretary and Confidential Assistant to a Judge
TCOUS 43 Secretary and Confidential Assistant to a Judge
TCOUS 44 Secretary and Confidential Assistant to a Judge
TCOUS 45 Secretary and Confidential Assistant to a Judge
TCOUS 46 Secretary and Confidential Assistant to a Judge
TCOUS 47 Secretary and Confidential Assistant to a Judge
TCOUS 49 Secretary and Confidential Assistant to a Judge
TCOUS 50 Secretary and Confidential Assistant to a Judge
TCOUS 51 Secretary and Confidential Assistant to a Judge
TCOUS 52 Secretary and Confidential Assistant to a Judge
TCOUS 53 Secretary and Confidential Assistant to a Judge
TCOUS 56 Secretary and Confidential Assistant to a Judge
TCOUS 59 Secretary and Confidential Assistant to a Judge
TCOUS 60 Secretary and Confidential Assistant to a Judge
TCOUS 61 Secretary and Confidential Assistant to a Judge
TCOUS 62 Secretary and Confidential Assistant to a Judge
TCOUS 63 Secretary and Confidential Assistant to a Judge
TCOUS 64 Secretary and Confidential Assistant to a Judge
TCOUS 65 Secretary and Confidential Assistant to a Judge
TCOUS 66 Trial Clerk to a Judge
TCOUS 67 Trial Clerk to a Judge
TCOUS 69 Trial Clerk to a Judge
TCOUS 71 Trial Clerk to a Judge
TCOUS 72 Trial Clerk to a Judge
TCOUS 73 Trial Clerk to a Judge
TCOUS 74 Trial Clerk to a Judge
TCOUS 75 Trial Clerk to a Judge
TCOUS 78 Trial Clerk to a Judge
TCOUS 79 Trial Clerk to a Judge
TCOUS 82 Secretary and Confidential Assistant to a Judge

Section 213.3327 Department of Veterans Affairs

VA 5 Special Assistant to the Secretary of Veterans Affairs
VA 8 Special Assistant to the Dean, Veterans Affairs Learning University
VA 106 Special Assistant to the Assistant Secretary for Congressional and Legislative Affairs

Section 213.3328 Broadcasting Board of Governors

BBG 1 Staff Director to the Chairman, Advisory Board for Cuba Broadcasting
BBG 3 Confidential Assistant to the Director, Office of Cuba Broadcasting
BBG 4 Public Affairs Officer to the Director, Voice of America
BBG 7 Confidential Assistant to the Director, Voice of America

Section 213.3330 Securities and Exchange Commission

SEC 2 Confidential Assistant to a Commissioner

SEC 3 Confidential Assistant to a Commissioner
SEC 4 Confidential Assistant to the Chief of Staff
SEC 5 Confidential Assistant to a Commissioner
SEC 8 Secretary (OA) to the Chief Accountant
SEC 9 Secretary to the General Counsel
SEC 11 Confidential Assistant to the Chairman
SEC 14 Secretary to the Director, Market Regulation
SEC 16 Secretary to the Director of Enforcement Division
SEC 18 Secretary to the Director, Division of Investment Management
SEC 19 Secretary to the Director, Corporation Finance
SEC 28 Confidential Assistant to the Chairman of the Securities and Exchange Commission
SEC 29 Secretary to the Deputy Director of Market Regulation
SEC 31 Special Assistant to the Director, Office of Investor Education and Assistance

Section 213.3331 Department of Energy

DOE 87 Staff Assistant to the Secretary of Energy
DOE 95 Staff Assistant to the Director, Office of Scheduling and Advance
DOE 102 Special Assistant to the Assistant Secretary for Congressional and Intergovernmental Affairs
DOE 103 Special Assistant to the Director, Civilian Radioactive Waste Management
DOE 104 Special Assistant to the Director, Office of Public Affairs
DOE 106 Special Assistant to the Director, Office of Scheduling and Advance
DOE 107 Special Assistant to the General Counsel
DOE 108 Special Assistant to the Assistant Secretary, Office of Congressional and Intergovernmental Affairs
DOE 109 Special Assistant to the Director, Office of Scheduling and Advance
DOE 110 Special Assistant to the Assistant Secretary for Congressional and Intergovernmental Affairs
DOE 111 Deputy Director, Scheduling and Advance to the Director, Office of Management and Administration
DOE 112 Special Assistant to the Deputy Assistant Secretary for Intergovernmental and External Affairs
DOE 114 Special Assistant to the Director, Office of Public Affairs
DOE 115 Special Advisor to the Chief of Staff
DOE 116 Special Assistant to the Administrator, Energy Information Administration
DOE 171 Special Assistant to the Director, Office of Worker and Community Transition
DOE 172 Special Assistant to the Assistant Secretary for Environment, Safety and Health
DOE 175 Senior Advisor to the Secretary of Energy
DOE 178 Special Assistant to the Assistant Secretary for Congressional and Intergovernmental Affairs
DOE 179 Special Assistant to the Director of Scheduling and Advance
DOE 180 Deputy Director, Public Affairs to the Director, Office of Public Affairs

Federal Energy Regulatory Commission

FERC 2 Confidential Assistant to a Member
FERC 3 Confidential Assistant to a Member
FERC 13 Technical Advisor to a Member

Section 213.3333 Federal Deposit Insurance Corporation

FDIC 11 Secretary to the Chairman
FDIC 17 Special Assistant to the Deputy to the Chairman

Section 213.3334 Federal Trade Commission

FTC 1 Director, Office of Public Affairs to the Chairman
FTC 3 Secretary to the Director, Bureau of Competition
FTC 14 Congressional Liaison Specialist to the Director of Congressional Relations
FTC 23 Special Assistant to a Commissioner
FTC 26 Confidential Assistant to a Commissioner
FTC 27 Confidential Assistant to a Commissioner

Section 213.3337 General Services Administration

GSA 44 Senior Policy Advisor to the Administrator
GSA 94 Congressional Relations Officer to the Associate Administrator for Congressional and Intergovernmental Affairs

Section 213.3339 U.S. International Trade Commission

ITC 5 Executive Assistant to a Commissioner
ITC 6 Staff Assistant (Economics) to a Commissioner
ITC 15 Executive Assistant to a Commissioner
ITC 18 Staff Assistant (Legal) to a Commissioner
ITC 19 Staff Economist to a Commissioner
ITC 22 Staff Assistant to a Commissioner
ITC 25 Staff Assistant (Economics) to the Chairman
ITC 30 Confidential Assistant to a Commissioner
ITC 31 Executive Assistant to a Commissioner
ITC 36 Executive Assistant to a Commissioner

Section 213.3340 National Archives and Records Administration

NARA 3 Presidential Diarist to the Archivist of the United States

Section 213.3342 Export-Import Bank of the United States

EXIM 30 Administrative Assistant to the Director
EXIM 44 Personal and Confidential Assistant to the First Vice President and Vice Chairman
EXIM 45 Administrative Assistant to a Member, Bank Board of Directors
EXIM 46 Special Assistant to the First Vice President and Vice Chairman
EXIM 50 Special Assistant to the President and Chairman
EXIM 53 Special Assistant to the President and Chairman
EXIM 57 Special Assistant to the President and Chairman

Section 213.3343 Farm Credit Administration

FCA 4 Secretary to the Chairman and CEO
FCA 12 Congressional and Public Affairs Specialist to the Director, Office of Congressional and Public Affairs
FCA 13 Executive Assistant to a Board Member
FCA 15 Public Affairs Specialist to the Director, Office of Congressional and Public Affairs
FCA 16 Executive Assistant to the Chairman

Section 213.3344 Occupational Safety and Health Review Commission

OSHRC 2 Confidential Assistant to the Chairman
OSHRC 3 Confidential Assistant to a Member

Section 213.3351 Federal Mine Safety and Health Review Commission

FM 17 Confidential Assistant to the Chairman
FM 26 Attorney-Advisor (General) to the Chairman

FM 29 Attorney-Advisor to a Commissioner
FM 30 Confidential Assistant to a Commissioner

Section 213.3356 Commission on Civil Rights

CCR 10 Special Assistant to the Staff Director
CCR 11 Special Assistant to a Commissioner
CCR 12 Special Assistant to a Commissioner
CCR 13 Special Assistant to a Commissioner
CCR 23 Special Assistant to a Commissioner
CCR 28 Assistant to a Commissioner
CCR 30 Special Assistant to a Commissioner
CCR 33 Special Assistant to a Commissioner

Section 213.3357 National Credit Union Administration

NCUA 21 Confidential Assistant to a Board Member
NCUA 26 Special Assistant to the Chairman

Section 213.3360 Consumer Product Safety Commission

CPSC 49 Special Assistant to a Commissioner
CPSC 50 Staff Assistant to a Commissioner
CPSC 53 Special Assistant to the Chairman
CPSC 55 Executive Assistant to the Chairman
CPSC 60 Special Assistant to the Chairman
CPSC 61 Staff Assistant to a Commissioner
CPSC 62 Special Assistant to a Commissioner
CPSC 63 Special Assistant to a Commissioner
CPSC 64 Special Assistant (Legal) to a Commissioner
CPSC 66 Supervisory Public Affairs Specialist to the Executive Director

Section 213.3365 U.S. Chemical Safety and Hazard Investigation Board

CSHIB 1 Special Assistant to a Board Member

Section 213.3367 Federal Maritime Commission

FMC 42 Counsel to a Commissioner
FMC 43 Counsel to a Commissioner
FMC 44 Special Assistant to a Commissioner
FMC 45 Counsel to a Commissioner

Section 213.3376 Appalachian Regional Commission

ARC 12 Senior Policy Advisor to the Federal Co-Chairman
ARC 13 Policy Advisor to the Federal Co-Chairman

Section 213.3377 Equal Employment Opportunity Commission

EEOC 2 Special Assistant to the Chairwoman
EEOC 10 Attorney-Advisor (Civil Rights) to the Chairwoman
EEOC 13 Assistant to the Chairwoman
EEOC 32 Senior Advisor to a Commissioner

Section 213.3379 Commodity Futures Trading Commission

CFTC 1 Administrative Assistant to the Chairman
CFTC 3 Administrative Assistant to a Commissioner
CFTC 5 Administrative Assistant to a Commissioner
CFTC 12 Special Assistant to a Commissioner
CFTC 31 Special Assistant to a Commissioner
CFTC 32 Special Assistant to a Commissioner

Section 213.3382 National Foundation on the Arts and Humanities

National Endowment for the Arts

NEA 79 Staff Assistant to the Chairman
NEA 80 Special Assistant to the Director, Office of Congressional and White House Liaison

National Endowment for the Humanities

NEH 72 Enterprise/Development Officer to the Chief of Staff
NEH 73 Director, Office of Public Affairs to the Chief of Staff

Section 213.3384 Department of Housing and Urban Development

HUD 2 Deputy Chief of Staff for Policy and Programs to the Chief of Staff
HUD 3 Deputy Chief of Staff for Operations and Intergovernmental Relations to the Chief of Staff
HUD 429 Staff Assistant to the Assistant Secretary for Public Affairs
HUD 436 Advance Coordinator to the Director of Executive Scheduling
HUD 555 Staff Assistant to the Assistant Secretary for Administration
HUD 558 Special Assistant to the Deputy Assistant Secretary for Congressional and Intergovernmental Relations

Section 213.3389 National Mediation Board

NMB 53 Confidential Assistant to a Board Member
NMB 54 Confidential Assistant to a Board Member
NMB 56 Confidential Assistant to the Chairman

Section 213.3394 Department of Transportation

DOT 20 Congressional Liaison Officer to the Director, Office of Congressional Affairs
DOT 54 Congressional Liaison Officer to the Director, Office of Congressional Affairs
DOT 151 Special Assistant to the Secretary
DOT 324 Director for Scheduling and Advance to the Chief of Staff
DOT 358 Special Assistant for Scheduling and Advance to the Secretary

Section 213.3396 National Transportation Safety Board

NTSB 32 Special Assistant to a Member
NTSB 102 Special Assistant to a Member

Section 213.3397 Federal Housing Finance Board

FHFB 2 Special Assistant to the Chairman
FHFB 6 Counselor to the Chairman

Senior Pay Level Positions (Above GS–15)

Section 213.3333 Federal Deposit Insurance Corporation

Chief of Staff to the Chairman
General Counsel to the Chairman
Deputy to the Chairman
Special Assistant to a Member of the Board

Section 213.3343 Farm Credit Administration

Executive Assistant to the Chairman
Executive Assistant to a Member
Executive Assistant to a Member
Director, Congressional and Public Affairs to the Chairman
Chief Operating Officer to the Chairman
Director, Office of Policy and Analysis to the Chief Operating Officer

Section 213.3353 Merit Systems Protection Board

Attorney Advisor (General) to a Board Member

Section 213.3357 National Credit Union Administration

Executive Assistant to a Member

Section 213.3390 Export-Import Bank of the United States

Vice President—Office of Communications to the President and Chairman
Special Counselor to the President and Chairman

General Counsel to the President and Chairman

Authority: 5 U.S.C. 3301 and 3302; E.O. 10577, 3 CFR 1954–1958 Comp., P.218

Office of Personnel Management.

Kay Coles James,

Director.

[FR Doc. 01–24076 Filed 9–25–01; 8:45 am]

BILLING CODE 6325–38–P

ENVIRONMENTAL PROTECTION AGENCY

[OPP–00742; FRL–6805–5]

Ethion; Receipt of Request for Registration Cancellations

AGENCY: Environmental Protection Agency (EPA).

ACTION: Notice.

SUMMARY: In accordance with section 6(f)(1) of the Federal Insecticide, Fungicide, and Rodenticide Act (FIFRA), as amended, EPA is issuing a notice of receipt of request by Cheminova AGRO A/S, FMC Corporation and Micro-Flo Corporation to cancel the registrations for all of their products containing O,O,O,O-tetaethyl S,S-methylene bis(phosphorodithioate) (ethion). EPA will decide whether to approve the request after consideration of public comment.

DATES: Comments on the requested cancellation of product and use registrations must be submitted to the address provided below by October 26, 2001.

FOR FURTHER INFORMATION CONTACT: Richard Dumas, Special Review and Reregistration Division (7508C), Office of Pesticide Programs, Environmental Protection Agency, 1200 Pennsylvania Ave., NW., Washington, DC 20460; telephone number: (703) 308–8015; fax number: (703) 308–8041; e-mail address: dumas.richard@epa.gov.

SUPPLEMENTARY INFORMATION:

I. General Information

A. Does this Action Apply to Me?

This action is directed to the public in general. Although this action may be of particular interest to persons who produce or use pesticides, the Agency has not attempted to describe all the specific entities that may be affected by this action. If you have any questions regarding the information in this notice, consult the person listed under **FOR FURTHER INFORMATION CONTACT**.

B. How Can I Get Additional Information, Including Copies of this Document and Other Related Documents?

1. *Electronically.* You may obtain electronic copies of this document, and certain other related documents that might be available electronically, from the EPA Internet Home Page at http://www.epa.gov/. To access this document, on the Home Page select ''Laws and Regulations'' and then look up the entry for this document under the ''**Federal Register**—Environmental Documents.'' You can also go directly to the **Federal Register** listings at http://www.epa.gov/fedrgstr/.

2. *In person.* The Agency has established an official record for this action under docket control number OPP–00742. The official record consists of the documents specifically referenced in this action, any public comments received during an applicable comment period, and other information related to this action, including any information claimed as Confidential Business Information (CBI). This official record includes the documents that are physically located in the docket, as well as the documents that are referenced in those documents. The public version of the official record does not include any information claimed as CBI. The public version of the official record, which includes printed, paper versions of any electronic comments submitted during an applicable comment period, is available for inspection in the Public Information and Records Integrity Branch (PIRIB), Rm. 119, Crystal Mall #2, 1921 Jefferson Davis Hwy., Arlington, VA, from 8:30 a.m. to 4 p.m., Monday through Friday, excluding legal holidays. The PIRIB telephone number is (703) 305–5805.

C. How and to Whom Do I Submit Comments?

You may submit comments through the mail, in person, or electronically. To ensure proper receipt by EPA, it is imperative that you identify docket control number OPP–00742 in the subject line on the first page of your response.

1. *By mail.* Submit your comments to: Public Information and Records Integrity Branch (PIRIB), Information Resources and Services Division (7502C), Office of Pesticide Programs (OPP), Environmental Protection Agency, 1200 Pennsylvania Ave., NW., Washington, DC 20460.

2. *In person or by courier.* Deliver your comments to: Public Information and Records Integrity Branch (PIRIB), Information Resources and Services Division (7502C), Office of Pesticide Programs (OPP), Environmental Protection Agency, Rm. 119, Crystal Mall #2, 1921 Jefferson Davis Hwy., Arlington, VA. The PIRIB is open from 8:30 a.m. to 4 p.m., Monday through Friday, excluding legal holidays. The PIRIB telephone number is (703) 305–5805.

3. *Electronically.* You may submit your comments electronically by e-mail to: opp-docket@epa.gov, or you can submit a computer disk as described above. Do not submit any information electronically that you consider to be CBI. Avoid the use of special characters and any form of encryption. Electronic submissions will be accepted in WordPerfect 6.1/8.0 or ASCII file format. All comments in electronic form must be identified by docket control number OPP–00742. Electronic comments may also be filed online at many Federal Depository Libraries.

D. How Should I Handle CBI that I Want to Submit to the Agency?

Do not submit any information electronically that you consider to be CBI. You may claim information that you submit to EPA in response to this document as CBI by marking any part or all of that information as CBI. Information so marked will not be disclosed except in accordance with procedures set forth in 40 CFR part 2. In addition to one complete version of the comment that includes any information claimed as CBI, a copy of the comment that does not contain the information claimed as CBI must be submitted for inclusion in the public version of the official record. Information not marked confidential will be included in the public version of the official record without prior notice. If you have any questions about CBI or the procedures for claiming CBI, please consult the person listed under **FOR FURTHER INFORMATION CONTACT.**

E. What Should I Consider as I Prepare My Comments for EPA?

You may find the following suggestions helpful for preparing your comments:

1. Explain your views as clearly as possible.

2. Describe any assumptions that you used.

3. Provide copies of any technical information and/or data you used that support your views.

4. If you estimate potential burden or costs, explain how you arrived at the estimate that you provide.

5. Provide specific examples to illustrate your concerns.

6. Offer alternative ways to improve the notice or collection activity.

7. Make sure to submit your comments by the deadline in this notice.

8. To ensure proper receipt by EPA, be sure to identify the docket control number assigned to this action in the subject line on the first page of your response. You may also provide the name, date, and **Federal Register** citation.

II. What Action is the Agency Taking

This notice announces receipt by EPA of requests from Cheminova A/S, FMC Corporation, and Micro-Flo Corporation to cancel five pesticide products registered under section 3 of FIFRA. These registrations are listed in Table 1.

A. Background Information

Ethion is an organophosphate insecticide registered for use on citrus in Florida and Texas, and cattle in eartags.

On August 24, August 29, and August 31, 2001, Micro-Flo Corporation, FMC Corporation, and Cheminova A/S, respectively, signed a Memorandum of Agreement with EPA requesting voluntary cancellation pursuant of 6(f) of FIFRA of all their registrations for products containing ethion. The effective cancellation dates are intended to be no earlier than October 1, 2003, for manufacturing use products and December 31, 2003, for end-use products.

B. Requests for Voluntary Cancellation

Under section 6(f)(1)(A) of FIFRA, registrants may request, at any time, that their pesticide registrations be canceled or amended to terminate one or more pesticide uses. Section 6(f)(1)(B) of FIFRA requires that before acting on a request for voluntary cancellation, EPA must provide a 30–day public comment period on the request for voluntary cancellation. In addition, section 6(f)(1)(C) of FIFRA requires that EPA provide a 180–day comment period on a request for voluntary termination of any minor agricultural use before granting the request, unless: (1) The registrants request a waiver of the comment period, or (2) the Administrator determines that continued use of the pesticide would pose an unreasonable adverse effect on the environment. The registrant has requested that EPA waive the 180–day comment period. EPA is granting the registrants' request to waive the 180–day comment period. EPA anticipates granting the cancellation request shortly after considering the comments recieved during the 30–day comment period for this notice. The registrations for which cancellations were requested are identified in Table 1.

TABLE 1.—REGISTRATIONS WITH PENDING REQUESTS FOR CANCELLATION

Company	Registration Number	Product
Cheminova A/S	4787–10	Cheminova Ethion Technical
FMC Corporation	279–2280	Ethion Technical Insecticide
	279–1254	Ethion 4 Miscible
Micro-Flo Corporation	51036–89	Ethion 4 EC
	51036–90	Ethion 8 EC

III. What is the Agency's Authority for Taking this Action?

Section 6(f)(1) of FIFRA provides that a registrant of a pesticide product may at any time request that any of its pesticide registrations be canceled. FIFRA section 6(f)(1) further provides that, before acting on the request, EPA must publish a notice of receipt of any such request in the **Federal Register**, make reasonable efforts to inform persons who rely on the pesticide for minor agricultural uses, and provide a 30–day period in which the public may comment. Thereafter, the Administrator may approve such a request.

IV. Procedures for Withdrawal of Request

Registrants who choose to withdraw a request for cancellation must submit such withdrawal in writing to the person listed under **FOR FURTHER INFORMATION CONTACT**. This written withdrawal of the request for cancellation will apply only to the applicable FIFRA section 6(f)(1) request listed in this notice. A withdrawal shall have no effect on any cancellation that has already been ordered; the effective date of such cancellation and all other provisions of any earlier cancellation action shall remain in effect. The withdrawal request must also include a commitment to pay any reregistration fees due, and to fulfill any applicable unsatisfied data requirements.

V. Provisions for Disposition of Existing Stocks

The Agency intends to prohibit the sale and distribution of existing stocks of ethion manufacturing products on October 1, 2003, and to prohibit the use of manufacturing use products on December 31, 2003. The Agency intends to prohibit the sale and distribution of end-use product on October 1, 2004, and to prohibit the use of end-use product on December 31, 2004. This is in accordance with the Agency's statement of policy as prescribed in the **Federal Register** of June 26, 1991 (56 FR 29362) (FRL–3846–4). Exceptions will be made if EPA determines that a product poses a risk concern, or is in noncompliance with reregistration requirements, or is subject to a Data Call-In. In all cases, product-specific disposition dates will be given in the cancellation orders.

Existing stocks are those stocks of registered pesticide products which are currently in the United States and which have been packaged, labeled, and released for shipment prior to the effective date of the cancellation action. Unless the provisions of an earlier order apply, existing stocks already in the hands of dealers or users can be distributed, sold, or used legally until they are exhausted, provided that such further sale and use comply with the EPA-approved label and labeling of the affected product. Exception to these general rules will be made in specific cases when more stringent restrictions on sale, distribution, or use of the products or their ingredients have already been imposed, as in a Special Review action, or where the Agency has identified significant potential risk concerns associated with a particular chemical.

VI. Future Tolerance Revocations

EPA anticipates drafting a future **Federal Register** notice proposing revocation of tolerances on commodities on which there has been no registered uses of ethion. With this present proposal, EPA seeks comment as to whether any individuals or groups want to support continuation of these tolerances.

List of Subjects

Environmental protection, Pesticides and pests.

Dated: September 17, 2001.

Lois A. Rossi,

Director, Special Review and Reregistration Division, Office ofPesticide Programs.

[FR Doc. 01–24060 Filed 9–25–01; 8:45 am]

BILLING CODE 6560–50–S

OFFICE OF PERSONNEL MANAGEMENT

Federal Employees Health Benefits Program: Medically Underserved Areas for 2002

AGENCY: Office of Personnel Management.

ACTION: Notice of Medically Underserved Areas for 2002.

SUMMARY: The Office of Personnel Management (OPM) has completed its annual determination of the States that qualify as Medically Underserved Areas under the Federal Employees Health Benefits (FEHB) Program for calendar year 2002. This is necessary to comply with a provision of the FEHB law that mandates special consideration for enrollees of certain FEHB plans who receive covered health services in States with critical shortages of primary care physicians. Accordingly, for calendar year 2002, OPM's calculations show that the following states are Medically Underserved Areas under the FEHB Program: Alabama, Georgia, Idaho, Kentucky, Mississippi, Missouri, Montana, New Mexico, North Dakota, South Carolina, South Dakota, Texas, Utah, and Wyoming. We have removed Louisiana from the list for calendar year 2002 and added the states of Georgia, Montana, North Dakota, and Texas.

EFFECTIVE DATE: January 1, 2002.

FOR FURTHER INFORMATION CONTACT: Ingrid Burford, 202–606–0004.

SUPPLEMENTARY INFORMATION: FEHB law (5 U.S.C. 8902(m)(2)) mandates special consideration for enrollees of certain FEHB plans who receive covered health services in States with critical shortages of primary care physicians. The FEHB law also requires that a State be designated as a Medically Underserved Area if 25 percent or more of the population lives in an area designated by the Department of Health and Human Services (HHS) as a primary medical care manpower shortage area. Such States are designated as Medically Underserved Areas for purposes of the FEHB Program, and the law requires non-HMO FEHB plans to reimburse beneficiaries, subject to their contract terms, for covered services obtained from any licensed provider in these States.

FEHB regulations (5 CFR 890.701) require OPM to make an annual determination of the States that qualify as Medically Underserved Areas for the next calendar year by comparing the latest HHS State-by-State population counts on primary medical care manpower shortage areas with U.S. Census figures on State resident populations.

Office of Personnel Management.

Kay Cole James,

Director.

[FR Doc. 01–24104 Filed 9–25–01; 8:45 am]

BILLING CODE 6325–01–P

SECURITIES AND EXCHANGE COMMISSION

Sunshine Act Meeting.

FEDERAL REGISTER CITATION OF PREVIOUS ANNOUNCEMENT: 66 FR 48493, September 20, 2001.

STATUS: Closed meeting.

PLACE: 450 Fifth Street, NW. Washington, DC.

TIME AND DATE OF PREVIOUSLY ANNOUNCED MEETING: September 21, 2001 at 10 a.m.

CHANGE IN THE MEETING: Additional Item.

The following item has been added to the closed meeting scheduled for Friday, September 21, 2001: regulatory matters regarding financial institutions.

Commissioner Hunt, as duty officer, determined that Commission business required the above change and that no earlier notice thereof was possible.

At the times, changes in Commission priorities require alternations in the scheduling of meeting items. For further information and to ascertain what, if any, matters have been added, deleted or postponed, please contact: The Office of the Secretary (202) 942—7070.

Dated: September 20, 2001.

Jonathan G. Katz,

Secretary.

[FR Doc. 01–24051 Filed 9–21–01; 12:14 pm]

BILLING CODE 8010–01–M

SECURITIES AND EXCHANGE COMMISSION

Sunshine Act Meeting

Federal Register Citation of Previous Announcement: [To be published Monday, September 24, 2001]

Status: Closed Meeting.

Place: 450 Fifth Street, NW., Washington, DC.

Time and Date of Previously, Announced Meeting: September 26, 2001 at 10 a.m.

Change in the Meeting: Time change.

The closed meeting scheduled for Wednesday, September 26, 2001 at 10 a.m. has been changed to Monday, September 24, 2001 at 11:30 a.m.

Dated: September 24, 2001.

Jonathan G. Katz,

Secretary.

[FR Doc. 01–24182 Filed 9–24–01; 11:57 am]

BILLING CODE 8010–01–M

SECURITIES AND EXCHANGE COMMISSION

[Release No. 34–44818; File No. SR–Phlx–2001–81]

Self-Regulatory Organizations; Notice of Filing and Immediate Effectiveness of Proposed Rule Change by the Philadelphia Stock Exchange, Inc. To Extend a PACE Order Execution and Price Protection Pilot Program

September 19, 2001.

Pursuant to Section 19(b)(1) of the Securities Exchange Act of 1934 (''Act''),[1] and Rule 19b–4 thereunder,[2] notice is hereby given that on August 29 2001, the Philadelphia Stock Exchange, Inc. (''Phlx'' or ''Exchange'') filed with the Securities and Exchange Commission (''Commission'') the proposed rule change as described in Items I, II, and III below, which Items have been prepared by the Exchange. The Exchange filed this proposal under Section 19(b)(3)(A) of the Act,[3] and Rule 19b–4(f)(6)[4] thereunder, which renders the proposal effective upon filing with the Commission. The Commission is publishing this notice to solicit comments on the proposed rule change from interested persons.

I. Self-Regulatory Organization's Statement of the Terms of Substance of the Proposed Rule Change

The Exchange proposes to extend through November 5, 2001 its Philadelphia Stock Exchange Automated Communication and Execution System(''PACE'')[5] price improvement pilot program (''pilot program''). The pilot program, which is found in Supplementary Material .05 and .07(c)(ii) to Phlx Rule 229, incorporates decimal pricing into two PACE provisions—immediate execution of certain market orders through the Public Order Exposure System (''POES'') and mandatory double-up/double-down price protection for equities quoting in decimals. The pilot

[1] 15 U.S.C. 78s(b)(1).

[2] 17 CFR 240.19b–4.

[3] 15 U.S.C. 78s(b)(3)(A).

[4] 17 CFR 240.19b–4(f)(6). The Phlx requested that the Commission waive the 5-day prefiling notice requirement, and the 30-day operative delay.

[5] PACE is the Exchange's automated order delivery, routing, execution and reporting system for equities.

program has been in effect since August 25, 2000.[6]

The only substantive change the Phlx proposes at this time is to extend the pilot program through November 5, 2001.[7] The text of the proposed rule change is available at the Phlx and at the Commission.

II. Self-Regulatory Organization's Statement of the Purpose of, and Statutory Basis for, the Proposed Rule Change.

In its filing with the Commission, the Exchange included statements concerning the purpose of and basis for the proposed rule change and discussed any comments it received on the proposed rule change. The text of these statements maybe examined at the places specified in Item IV below. The Exchange has prepared summaries, set forth in Sections A, B, and C below, of the most significant aspects of such statements.

A. Self-Regulatory Organization's Statement of the Purpose of, and Statutory Basis for, the Proposed Rule Change

1. Purpose

The Phlx proposes to extend, through November 5, 2001, the Phlx's pilot program that incorporates immediate execution of certain orders and mandatory double-up/double-down price protection for equities quoting in decimals over PACE.

The order execution portion of the pilot program is found in Supplementary Material .05 to Phlx Rule 229, which establishes that market orders up to a specified number of shares will be ''stopped'' at the PACE quote at time of entry into the system and delayed up to 30 seconds to allow for price improvement. However, if the PACE quote at time of order entry reflects a point spread (the difference between the best bid and offer) of $.05 or less, that order will be executed immediately.

The double-up/double-down price protection portion of the pilot program is found in Supplementary Material .07(c)(ii) to Phlx Rule 229, which establishes that if a specialist chooses not to provide automatic price improvement to all customers and all eligible market orders in an equity quoting in decimals, the specialist must provide manual double-up/double-down price protection in any instance where the bid/ask of the PACE quote is $.05 or greater. Double-up/double-down is defined in Supplementary Material .07(c)(ii) as a trade that would be at least $.10 (up or down) from the last regular way sale on the primary market, or, $.10 from the regular way sale that was the previous intra-day change on the primary market.

2. Statutory Basis

The Exchange believes that the proposed rule change is consistent with Section 6 of the Act[8] in general, and in particular, with Section 6(b)(5),[9] in that it is designed to promote just and equitable principles of trade, remove impediments to and perfect the mechanism of a free and open market and protect investors and the public interest by providing for automatic execution of certain market orders and mandatory double-up/double-down price protection for equities quoted in decimals.

B. Self-Regulatory Organization's Statement on Burden on Competition

The Exchange does not believe that the proposed rule change will impose any inappropriate burden on competition.

C. Self-Regulatory Organization's Statement on Comments on the Proposed Rule Change Received From Members, Participants, or Others

No written comments were either solicited or received.

III. Date of Effectiveness of the Proposed Rule Change and Timing for Commission Action

Because the foregoing proposed rule change does not:

(i) significantly affect the protection of investors or the public interest;

(ii) impose any significant burden on competition; and

(iii) become operative for 30 days from the date on which it was filed, or such shorter time as the Commission may designate, it has become effective pursuant to Section 19(b)(3)(A) of the Act[10] and Rule 19b–4(f)(6) thereunder.[11] At any time within 60 days of the filing of the proposed rule change, the Commission may summarily abrogate such rule change if it appears to the Commission that such action is necessary or appropriate in the public interest, for the protection of investors, or otherwise in furtherance of the purposes of the Act.

The Exchange has requested that the Commission waive the 5-day pre-filing notice requirement, and accelerate the operative date. The Commission finds good cause to waive the pre-filing notice requirement, and to designate the proposal to be both effective and operative upon filing because such designation is consistent with the protection of investors and the public interest. Waiver of these requirements will allow the pilot program to continue uninterrupted through November 5, 2001. For these reasons, the Commission finds good cause to designate that the proposal is both effective and operative upon filing with the Commission.[12]

IV. Solicitation of Comments

Interested persons are invited to submit written data, views, and arguments concerning the foregoing, including whether the proposal is consistent with the Act. Persons making written submissions should file six copies thereof with the Secretary, Securities and Exchange Commission, 450 Fifth Street, NW., Washington, DC 20549–0609. Copies of the submission, all subsequent amendments, all written statements with respect to the proposed rule change that are filed with the Commission, and all written communications relating to the proposed rule change between the Commission and any person, other than those that may be withheld from the public in accordance with the provisions of 5 U.S.C. 552, will be available for inspection and copying in the Commission's Public Reference Room. Copies of such filing will also be available for inspection and copying at the principal office of the Exchange. All submissions should refer to file number SR–Phlx–2001–81, and should be submitted by October 17, 2001.

[6] The pilot program was established in SR–Phlx–00–08. *See* Securities Exchange Act Release No. 43206 (August 25, 2000), 65 FR 35250 (September 1, 2000). The pilot program was extended through August 31, 2001 in SR–Phlx–2001–20). *See* Securities Exchange Act Release No. 41185 (April 16, 2001), 66 FR 20511 (April 23, 2001). The price improvement portion of the pilot program (Supplementary Material .07(c)(i) to Phlx Rule 229) has been replaced by a price improvement pilot program with an automatic price improvement feature based on percentage of the spread between the bid and the offer. *See* Securities Exchange Act Release Nos. 43901 (January 30, 2001), 66 FR 8988 (February 5, 2001) (SR–Phlx–2001–12) and 44672 (August 9 2001), 66 FR 43285 (August 17, 2001) (SR–Phlx–2001–12) and 44672 (August 9, 2001), 66 FR 43285 (August 17, 2001) (SR–Phlx–2001–67). The Phlx is not seeking to extend the pilot program as to Supplementary Material .07(c)(i) to Phlx Rule 229 at this time.

[7] The Phlx recognizes that all equities currently quote in decimals. The Phlx will file a proposed rule change in the future to remove references to fractional pricing from this and other Phlx rules.

[8] 15 U.S.C. 78f.

[9] 15 U.S.C. 78f(b)(5).

[10] 15 U.S.C. 78s(b)(3)(A).

[11] 17 CFR 240.19b–4(f)(6).

[12] For purposes only of accelerating the operative date of this proposal, the Commission has considered the proposed rule's impact on efficiency, competition, and capital formation. 15 U.S.C. 78c(f).

For the Commission, by the Division of Market Regulation, pursuant to delegated authority.[13]

Margaret H. McFarland,

Deputy Secretary.

[FR Doc. 01–24002 Filed 9–25–01; 8:45 am]

BILLING CODE 8010–01–M

SECURITIES AND EXCHANGE COMMISSION

[Release No. 34–44819; File No. SR–PHLX–2001–74]

Self-Regulatory Organizations; Notice of Filing of Proposed Rule Change by the Philadelphia Stock Exchange, Inc. To Amend Phlx By-Law Article XII, Section 12–4 and Article XV, Sections 15–1 and 15–2

September 19, 2001.

Pursuant to Section 19(b)(1) of the Securities and Exchange Act of 1934 (''Act'')[1] and Rule 19b–4 thereunder,[2] notice is hereby given that on August 7, 2001, the Philadelphia Stock Exchange, Inc. (''Phlx'' or ''Exchange'') filed with the Securities and Exchange Commission (''Commission'') the proposed rule change described in Items I, II, and III below, which Items have been prepared by the Exchange. The Commission is publishing this notice to solicit comments on the proposed rule change from interested persons.

I. Self-Regulatory Organization's Statement of the Terms of Substance of the Proposed Rule Change

The Phlx proposes to: (i) amend Phlx By-Law Article XII, Section 12–4 and Article XV Sections 15–1 and 15–2 to reduce the current 14-day posting period for membership and foreign currency options participation transfers to seven days;[3] (ii) change the notice of posting from the Exchange bulletin board to the Phlx website while retaining publication in the Secretary's Weekly Bulletin; and (iii) allow the Chairman or his designate to reduce the posting period as deemed appropriate upon determination that such action is in the best interests of the Exchange. The following is the text of the proposed rule change. Additions are in italics and deletions are in brackets.

ARTICLE XII

Application

Sec. 12–4 Application

(a) No change.

(b) No change.

(c) No change.

(d) If the admissions Committee votes favorably upon the Candidate, his name shall be posted upon the [bulletin board] *website* of the Exchange for a period of [fourteen] *seven* days and shall also appear in the Secretary's Weekly Bulletin [mailed] to the membership. An objection by a member of the Exchange to the election of a candidate for membership or to the admission of a non-member as a foreign currency options participant shall be in writing addressed to the Admissions Committee[.] *and filed at any time with the Office of the Secretary.*

(e) If during the [fourteen] *seven*-day posting period no objection to the election of the applicant to membership or to the admission of the non-member as a foreign currency options participant has been received, his election to membership or his admission as a foreign currency options participant shall become effective upon the expiration of the posting period and upon his acquisition by transfer of an Exchange membership or of a foreign currency options participation, as the case may be.

(f) No change.

(g) If during the [fourteen] *seven*-day posting period an objection or objections to the election of the applicant to membership or to the applicant's admission as a foreign currency options participant have been received, the Committee shall reconsider its favorable vote on the candidate upon the expiration of such period. If the Committee reaffirms its favorable vote the applicant shall thereupon be elected to membership or be admitted as a foreign currency options participant upon his acquisition by transfer of an Exchange membership or of a foreign currency options participation, as the case may be. If the committee rescinds its favorable vote, changing it to unfavorable, the applicant shall have the rights of notice, hearing and review as provided in subsection (f) of this section. If, after hearing and review, unfavorable action on his application is reversed, his election to membership or his admission as a foreign currency options participant shall become effective in accordance with this subsection (g) and without the requirement of an additional posting period.

(h) No change.

(i) *The Chairman or his designate may in his discretion, reduce any membership and/or participation related notice and/or posting period requirements including, without limitation, any such requirements involving new members or participants and concerning transfers of memberships or foreign currency options participations, as the chairman may deem appropriate if the Chairman or his designate shall determine that such action is in the best interests of the Exchange.*

The Chairman or his designate may condition any reduction of the posting period upon receipt of an indemnification or other form of security which he or his designate deems adequate to protect the interests of the Exchange, members, member organizations, participants, participant organizations, investors and the public interest.

ARTICLE XV

Transfer of Membership

Transfer of Membership—Notice

SEC. 15–1. A transfer of membership shall be made upon submission of the name of the candidate to and the approval of the transfer by the Admissions Committee. Notice of the proposed transfer shall be sent to each member of the Exchange at least [fourteen] *seven* days prior to transfer, which notice shall specify the date on which the proposed transfer will become provisionally effective. The lease of legal title to a membership or reversion thereof shall be deemed to be a transfer of membership under this Article. The transfer of equitable title only shall not be deemed to be a transfer of membership under this Article.

Exceptions to Notice—No change

Transfer of Equitable Title

A transfer of equitable title only to a membership shall be made upon submission of the name of the candidate to the Admissions Committee. A transfer may not be effected pursuant to a lease agreement. Notice of this transfer shall be posted upon the [bulletin board] *website* of the Exchange and shall also appear in the Secretary's Weekly Bulletin mailed to the membership at least [fourteen] *seven* days in advance of

[13] 17 CFR 200.30–3(a)(12).

[1] 15 U.S.C. 78s(b)(1).

[2] 17 CFR 240.19b–4.

[3] As required by Exchange By-Law Article XXII, Section 22–2, the Exchange issued notice of the proposed By-Law amendments to Articles XII and XV to its membership on April 11, 2001 and July 10, 2001, respectively. The Exchange represents that it did not receive a request from 17 or more members for a special meeting of the Exchange to consider the proposed amendment. As a result, the Board approved the proposed amendment to By-Law Article XII on May 16, 2001, and approved the proposed amendment to By-Law Article XV on August 1, 2001. Telephone conversation between Murray L. Ross, Vice President and Secretary, Phlx, Florence Harmon, Senior Special Counsel, Division of Market Regulation (''Division'') Commission, and Sonia Patton, Special Counsel, Division, Commission (September 13, 2001).

the transfer's effective date. Notice of the proposed transfer shall specify the date on which the proposed transfer will become effective.

Lease of Membership—No change

Contracts of Transferor

SEC. 15–2. A member proposing to transfer his membership shall not, after the [fourteenth] *seventh* day of notice of the proposed transfer, make any contracts on the floor of the exchange facility pending the effective date of the proposed transfer unless the contract is expressly made on behalf of another member of the exchange or on behalf of a member firm which will continue to be a member firm notwithstanding the completion of such transfer or unless the member is also a foreign currency options participant and is proposing to transfer only his foreign currency options participation (in which case the member shall be prevented only from making any foreign currency option contracts on the floor of the exchange facility after the [fourteenth] *seventh* day of notice of the proposed transfer unless either of the exceptions set forth above applies).

No contract made by a member proposing to transfer his membership or by his firm after the said [fourteenth] *seventh* day shall if the transfer becomes effective, be the basis of a claim against the proceeds of the transfer thereof under subdivision Third of Section 15–3 of this Article, but may, if the transfer is to another partner in the member firm in which the transferring member is a partner, constitute the basis of a claim under said subdivision Third of Section 15–3, against the proceeds of the subsequent transfer of such membership by the partner to whom it is transferred.

On the [fourteenth] *seventh* day after notice of a proposed transfer of membership has been mailed to the membership, all exchange contracts of the member proposing to make the transfer and of his firm unless such firm will continue to be a member firm notwithstanding the completion of such transfer, shall mature and if not settled shall be closed out as in the case of an insolvency, unless the same are assumed or taken over by another member of this Exchange or member firm; provided, however, that, in the case of a member proposing to transfer only his foreign currency options participation, the provisions of this sentence shall apply only to the foreign currency option contracts of such member and of his firm (and shall not apply even to the latter contracts if such member's firm will continue to be a foreign currency options participant firm notwithstanding the completion of such transfer).

Effect of Involuntary Transfers—No Change

* * * * *

II. Self-Regulatory Organization's Statement of the Purpose of, and Statutory Basis for, the Proposed Rule Change

In its filing with the Commission, the Phlx included statements concerning the purpose of, and basis for, the proposed rule change and discussed any comments it received on the proposed rule change. The text of these statements may be examined at the places specified in Item IV below. The Phlx has prepared summaries, set forth in sections A, B, and C below, of the most significant aspects of such statements.

A. Self-Regulatory Organization's Statement of the Purpose of, and Statutory Basis for, the Proposed Rule Change

1. Purpose

The proposed rule change would reduce the notice and posting period of a pending transfer of a membership or foreign currency options participation from 14 days to seven days.[4] The purpose of the posting period is to provide members with notice of the proposed transfer of the membership or participation. The posting sets forth the name of the applicant, or member, the affiliation with a particular member organization or participant organization, the character of the membership (regular membership or regular membership with options privileges), and the owner of the membership. The purpose of the posting period is to allow for submission of information concerning an applicant's qualification and fitness for membership. It should be noted that the Exchange's Office of the Secretary and Department of Membership Services has not received any submissions from members or others affiliated with member or participant organizations in response to postings over the past several years.

The Exchange is able to process transfers and applications for membership by utilizing modern communications facilities to have its agents conduct background investigation of potential new members, screen the records available from the Central Registration Depository and inquire of other self-regulatory organizations on the status of a candidate for admission while allowing reasonable notice to the membership. The Exchange, once it has received all appropriate application materials, is able to process the applications well before the expiration of the current 14-day posting period. It should also be noted that the vast majority of postings are changes in membership status due to transfer and termination of membership under lease. The present 14-day posting and notice of transfer requires applicants to wait for a period of time following the completion of the processing of their application for their new membership capacity to become effective. With respect to intra firm transfers or transfers due to a new lease arrangement, this delay results in inefficiencies in the conduct of business and inconveniences applicants and their affiliated broker-dealer entities.

The proposed amendment to By-Law Article XII Section 12–4 also provides that the Chairperson or his designate may, in his discretion, reduce any membership and/or participation related notice and/or posting period requirements as deemed appropriate if the Chairman or his designate determines that the reduction is in the best interests of the Exchange. This proposed change is designed to afford the Exchange some flexibility in circumstances where it may be necessary to speed the approval process for an applicant to assume responsibilities as an options specialist for an Exchange member organization when that firm does not have an inactive nominee available to assume such responsibilities and the firm's only qualified person is a member in good standing of another self-regulating organization that has never been a member of the Phlx. In such circumstances a further reduction in the posting period could be called for and implemented without compromising the Exchange's duty to give notice and to protect the interest of the Exchange, members, member organizations, participants, participant organizations, investors, and the public interest.

The notice period also allows for submissions of claims against the transfer under Phlx By-Law Article XV by providing the membership and others with notice of changes in membership status. The Exchange believes that a seven-day notice period is sufficient to provide information to the membership of a pending change in membership or participation status or affiliation with a particular member or participant organization. It should be noted that potential claims against a

[4] This would also encompass inactive nominee notices. Telephone conversation between Murray L. Ross, Vice President and Secretary, Phlx, and Sonia Patton, Special Counsel, Division of Market Regulation, Commission, on September 4, 2001.

particular member or member organization may be asserted even after the posting period has run under By-Law Article XV, Section 15–4. However, it is extraordinarily rare that claims against a membership transfer are submitted to the Exchange, as such matters are usually settled by the parties prior to the effectiveness of a transfer.

2. Statutory Basis

The Exchange believes that the proposed rule change is consistent with Section 6(b) of the Act [5] in general, and furthers the objectives of Section 6(b)(5) [6] in particular, because it is designed to perfect the mechanism of a free and open market and a national market system, to promote just and equitable principles of trade, and to protect investors and the public interest by providing a reduction of the posting period from 14 to seven days while retaining appropriate notice of applicants for membership and participation and transfers of memberships and preserving members' ability to submit information concerning the qualifications and fitness for membership of applicants.

B. Self-Regulatory Organization's Statement on Burden on Competition

The Phlx does not believe that the proposed rule change will impose any inappropriate burden on competition.

C. Self-Regulatory Organization's Statement on the Proposed Rule Change Received from Members, Participants, or Others

The Exchange did not solicit or receive written comments on the proposed rule change.

III. Date of Effectiveness of the Proposed Rule Change and Timing for Commission Action

Within 35 days of the date of publication of this notice in the **Federal Register** or within such longer period (i) as the Commission may designate up to 90 days of such date if it finds such longer period to be appropriate and publishes its reasons for so finding or (ii) as to which the Phlx consents, the Commission will:

(A) by order approve such proposed rule change, or

(B) institute proceedings to determine whether the proposed rule change should be disapproved.

IV. Solicitation of Comments

Interested persons are invited to submit written data, views, and arguments concerning the foregoing, including whether the proposed rule change is consistent with the Act. Persons making written submissions should fix six copies thereof with the Secretary, Securities and Exchange Commission, 450 Fifth Street, NW., Washington, DC 20549–0609. Copies of the submission, all subsequent amendments, all written statements with respect to the proposed rule change that are filed with the Commission, and all written communications relating to the proposed rule change between the Commission and any person, other than those that may be withheld from the public in accordance with the provisions of 5 U.S.C. 552, will be available for inspection and copying in the Commission's Public Reference Room. Copies of such filing will also be available for inspection and copying at the principal office of the Phlx. All submissions should refer to the File No. SR–Phlx–2001–74 and should be submitted by October 17, 2001.

For the Commission, by the Division of Market Regulation, pursuant to delegated authority.[7]

Margaret H. McFarland,

Deputy Secretary,

[FR Doc. 01–24003 Filed 9–25–01; 8:45 am]

BILLING CODE 8010–01–M

[5] 15 U.S.C. 78f(b).

[6] 15 U.S.C. 78f(b)(5).

[7] 17 CFR 200.30–3(a)(12).

SMALL BUSINESS ADMINISTRATION

Data Collection Available for Public Comments and Recommendations

ACTION: Notice and request for comments.

SUMMARY: In accordance with the Paperwork Reduction Act of 1995, this notice announces the Small Business Administration's intentions to request approval on a new, and/or currently approved information collection.

DATES: Submit comments on or before November 26, 2001.

ADDRESSES: Send all comments regarding whether these information collections are necessary for the proper performance of the function of the agency, whether the burden estimates are accurate, and if there are ways to minimize the estimated burden and enhance the quality of the collections, to Sandra Johnston, Program Analyst, Office of Financial Assistance, Small Business Administration, 409 3rd Street, SW., Suite 8300, Washington DC 20416

FOR FURTHER INFORMATION CONTACT: Sandra Johnston, Program Analyst, (202) 205–7528 or Curtis B. Rich, Management Analyst, (202) 205–7030.

SUPPLEMENTARY INFORMATION:

Title: Settlement Sheet.
Form No: 1050.
Description of Respondents: SBA Borrowers.
Annual Responses: 39,988.
Annual Burden: 19,994.
Title: Lender Transcript of Account.
Form No: 1149.
Description of Respondents: SBA Guaranty Lenders.
Annual Responses: 5,000.
Annual Burden: 5,000.

Jacqueline White,

Chief, Administrative Information Branch.

[FR Doc. 01–24045 Filed 9–25–01; 8:45 am]

BILLING CODE 8025–01–P

SOCIAL SECURITY ADMINISTRATION

Agency Information Collection Activities: Proposed Request and Comment Request

The Social Security Administration (SSA) publishes a list of information collection packages that will require clearance by the Office of Management and Budget (OMB) in compliance with P.L. 104–13 effective October 1, 1995, The Paperwork Reduction Act of 1995. SSA is soliciting comments on the accuracy of the agency's burden estimate; the need for the information; its practical utility; ways to enhance its quality, utility and clarity; and on ways to minimize burden on respondents, including the use of automated collection techniques or other forms of information technology.

Written comments and recommendations regarding the information collection(s) should be submitted to the OMB Desk Officer and the SSA Reports Clearance Officer and at the following addresses:

(OMB), Office of Management and Budget, Attn: Desk Officer for SSA, New Executive Office Building, Room 10230, 725 17th St., NW., Washington, D.C. 20503.

(SSA), Social Security Administration, DCFAM, Attn: Frederick W. Brickenkamp, 1–A–21 Operations Bldg., 6401 Security Blvd., Baltimore, MD 21235.

I. The information collections listed below will be submitted to OMB within 60 days from the date of this notice. Therefore, your comments should be submitted to SSA within 60 days from the date of this publication. You can obtain copies of the collection instruments by calling the SSA Reports Clearance Officer at 410–965–4145, or

by writing to him at the address listed above.

1. Modified Benefits Formula Questionnaire, Employer—0960–0477. Form SSA–58 is used by the Social Security Administration (SSA) to verify or disprove a claimant's allegation regarding a pension based on non-covered employment after 1956. It also shows whether that claimant was eligible for the pension before 1986. The respondents are persons who are eligible (after 1985) for both Social Security benefits and a pension from their employer, based on work not covered by SSA.

Number of Respondents: 30,000.

Frequency of Response: 1.

Average Burden Per Response: 20 minutes.

Estimated Annual Burden: 10,000 hours.

2. Application for Survivors Benefits—0960–0062. The information collected on Form SSA–24 is needed to satisfy the ''Jointly Prescribed Application'' of title 38 USC 5105. The provision requires that survivors who file with SSA or the VA shall be deemed to have filed with both agencies, and that each agency's forms must request information to constitute an application for both SSA and VA benefits. The respondents are survivors of military service veterans filing for Social Security benefits

Number of Respondents: 3,200.

Frequency of Response: 1.

Average Burden Per Response: 15 minutes.

Estimated Annual Burden: 800 hours.

3. Medical Report (Individual With Childhood Impairment)—0960–0102. The information on Form SSA–3827–BK is needed to determine the claimant's physical and mental status prior to making a childhood disability determination. The respondents are medical sources.

Number of Respondents: 12,000.

Frequency of Response: 1.

Average Burden Per Response: 30 minutes.

Estimated Annual Burden: 6,000 hours.

4. Work Activity Report (Self-Employed)—0960–0598. Form SSA–820–F4 is used to determine whether work an individual performs in self-employment is at the substantial gainful activity (SGA) level. An individual's entitlement to benefits ends if he/she demonstrates an ability to perform SGA. The respondents are social security disability beneficiaries and Supplemental Security Income recipients.

Number of Respondents: 100,000.

Frequency of Response: 1.

Average Burden Per Response: 30 minutes.

Estimated Annual Burden: 50,000 hours.

5. Agreement to Sell Property—0960–0127. Form SSA–8060–U3 is used by SSA to document and ensure that individuals or couples who are otherwise eligible for Supplemental Security Income (SSI) payments, but who own in excess of the statutory limit, may receive conditional benefit payments if they agree to dispose of the excess resources and repay any overpayments with the proceeds of the disposition. The form is also used to ensure that the individuals understand their obligations under the agreement. The respondents are individuals (or couples) who are receiving (or will receive) conditional SSI payments.

Number of Respondents: 20,000.

Frequency of Response: 1.

Average Burden Per Response: 10 minutes.

Estimated Annual Burden: 3,333 hours.

6. Reconsideration Disability Report-0960–0144. SSA uses the information collected on Form SSA–3441 to determine if the claimant's medical or vocational situation changed after the initial disability determination, when the claimant requests a reconsideration of a denied disability claim. The form also elicits additional sources of medical and vocational evidence that were not considered in the initial determination. The respondents are disability beneficiaries who request a reconsideration of their claim.

Number of Respondents: 400,000.

Frequency of Response: 1.

Average Burden Per Response: 30 minutes.

Estimated Average Burden: 200,000 hours.

7. Electronic Benefit Verification Information—0960–0595. SSA provides verification of benefits, when requested, to individuals receiving title II and/or title XVI benefits. In order to provide to the public an easy and convenient means of requesting benefit information, SSA has developed an electronic request form that will allow persons to request the information through the Internet. The information collected on the electronic screens will be used by SSA to process the request for a benefit verification statement. To ensure appropriate confidentiality, the statement will be mailed to the recipient/beneficiary address shown in SSA's records. The respondents are title II and XVI recipients/beneficiaries who request benefit verification information using the Internet.

Number of Respondents: 133,920.

Frequency of Response: 1.

Average Burden Per Response: ½ minute.

Estimated Average Burden: 1,116 hours.

8. Statement by School Official About Student's Attendance; Statement to U.S. Social Security Administration By School Outside the United States About Student's Attendance—0960–0090. The information collected on Forms SSA–1371 and SSA–1371–FC is used by SSA to verify a student's alleged full-time attendance at an educational institution, in order to determine the student's eligibility for Social Security student benefits. The respondents are school officials who provide the information on these forms.

Number of Respondents: 5,000.

Frequency of Response: 1.

Average Burden Per Response: 10 minutes.

Estimated Average Burden: 833 hours.

9. Report of Continuing Disability Interview—0960–0072. SSA periodically reviews the cases of individuals who receive Social Security benefits and Supplemental Security Income (SSI) to determine if disability continues. During a review, SSA uses Form SSA–454–BK to collect information on disability. The information on the form is used to update the record of the disabled individual on recent medical treatment, vocational and educational experiences, work activity, and evaluations of potential for return to work. Based on this information and other evidence, SSA makes a determination on whether disability continues or has ended, and if so, when disability ended. The respondents are individuals who receive Social Security or SSI disability benefits, or their representatives.

Number of Respondents: 852,000.

Frequency of Response: 1.

Average Burden Per Response: 30 minutes.

Estimated Annual Burden: 426,000 hours.

II. The information collections listed below have been submitted to OMB for clearance. Your comments on the information collections would be most useful if received by OMB and SSA within 30 days from the date of this publication. You can obtain a copy of the OMB clearance package by calling the SSA Reports Clearance Officer on (410) 965–4145, or by writing to him at the address listed above.

1. Request for Social Security Earnings Information—0960–0525. The Social Security Act provides that a wage earner, or someone authorized by a

wage earner, may request Social Security earnings information from the Social Security Administration, using form SSA–7050. SSA uses the information collected on the form to verify that the requestor is authorized to access the earnings record and to produce the earnings statement. The respondents are wage earners and organizations and legal representatives authorized by the wage earner.

Number of Respondents: 61,494.

Frequency of Response: 1.

Average Burden Per Response: 11 minutes.

Estimated Annual Burden: 11,274 hours.

2. Survey of Adults to Determine Public Understanding of Social Security Programs—0960–0612. As a result of the Government Performance and Results Act (GPRA), SSA must measure its progress in achieving Agency-level goals. One of SSA's strategic goals is to ''Strengthen public understanding of Social Security programs.'' In order to measure its performance in meeting this strategic objective, SSA established the Public Understanding Measurement System (PUMS) which involves surveying the public about their knowledge of Social Security programs. The Gallup Organization has been conducting PUMS surveys, on behalf of SSA, since fiscal year 1999.

For the next series of surveys, SSA has made some modifications to the PUMS survey process to bring it into compliance with its most recent Agency Strategic Plan, *Mastering the Challenge*, and plans to conduct 22,000 surveys beginning this fall as shown below:

- 1,000 national surveys will be used to determine the FY 2001 performance level; *e.g.*, the percent of Americans knowledgeable about Social Security programs.
- 1,050 national surveys will be used to ensure that SSA has equal data for specific demographic groups (African Americans, Hispanic Americans, and Asian Americans) that have been underrepresented in previous national surveys. This data will be used to improve SSA's public education programs directed to these populations.
- 19,950 ''area'' surveys will provide area managers with statistically valid local GPRA performance data. This data will be used to measure local progress and to improve SSA public education programs in those areas. This will ensure that SSA's resources are used effectively and that it continues to make progress in meeting its strategic objective.

The respondents will be randomly selected adults residing in the United States.

	National surveys	Area surveys
Number of respondents	2,050	19,950.
Frequency of response	1	1.
Average burden per response	10.5 minutes	10.5 minutes.
Estimated annual burden	359 hours	3,491 hours.

Dated: September 20, 2001.

Frederick W. Brickenkamp,

Reports Clearance Officer.

[FR Doc. 01–24040 Filed 9–25–01; 8:45 am]

BILLING CODE 4191–02–U

OFFICE OF THE UNITED STATES TRADE REPRESENTATIVE

2001–2002 Allocations of the Tariff-Rate Quotas for Raw Cane Sugar, Refined Sugar, and Sugar Containing Products

AGENCY: Office of the United States Trade Representative.

ACTION: Notice.

SUMMARY: The Office of the United States Trade Representative (USTR) is providing notice of the country-by-country allocations of the in-quota quantity of the tariff-rate quotas for imported raw cane sugar, refined sugar, and sugar containing products for the period that begins October 1, 2001 and ends September 30, 2002.

EFFECTIVE DATE: October 1, 2001.

ADDRESSES: Inquiries may be mailed or delivered to Sharon Sheffield, Director of Agricultural Trade Policy, Office of Agricultural Affairs, Office of the United States Trade Representative, 600 17th Street, NW, Washington, DC 20508.

FOR FURTHER INFORMATION CONTACT: Sharon Sheffield, Office of Agricultural Affairs, 202–395–6127.

SUPPLEMENTARY INFORMATION: Pursuant to additional U.S. Note 5 to chapter 17 of the Harmonized Tariff Schedule of the United States (HTS), the United States maintains tariff-rate quotas for imports of raw cane and refined sugar. Pursuant to additional U.S. Note 8 to chapter 17 of the Harmonized Tariff Schedule, the United States also maintains a tariff-rate quota for certain sugar-containing products.

Section 404(d)(3) of the Uruguay Round Agreements Act (19 U.S.C. 3601(d)(3)) authorizes the President to allocate the in-quota quantity of a tariff-rate quota for any agricultural product among supplying countries or customs areas. The President delegated this authority to the United States Trade Representative under paragraph (3) of Presidential Proclamation No. 6763 (60 FR 1007).

The in-quota quantity of the raw cane tariff-rate quota for the period October 1, 2001–September 30, 2002, has been established by the Secretary of Agriculture at 1,254,983 metric tons, raw value (1,383,382 short tons). This quantity includes 1,117,195 metric tons, raw value, the minimum to which the United States is committed under the Uruguay Round Agreement, and 137,788 metric tons, raw value, which is the additional amount that the United States is providing to Mexico under the North American Free Trade Agreement (NAFTA). The quantity of 1,117,195 metric tons, raw value is being allocated to the following countries:

Country	FY 2002 allocation
Argentina	45,281
Australia	87,402
Barbados	7,371
Belize	11,583
Bolivia	8,424
Brazil	152,691
Colombia	25,273
Congo	7,258
Cote d'Ivoire	7,258
Costa Rica	15,796
Dominican Republic	185,335
Ecuador	11,583
El Salvador	27,379
Fiji	9,477
Gabon	7,258
Guatemala	50,546
Guyana	12,636
Haiti	7,258
Honduras	10,530
India	8,424
Jamaica	11,583
Madagascar	7,258
Malawi	10,530
Mauritius	12,636
Mexico	7,258
Mozambique	13,690
Nicaragua	22,114
Panama	30,538
Papua New Guinea	7,258
Paraguay	7,258

Country	FY 2002 allocation
Peru	43,175
Philippines	142,160
South Africa	24,220
St. Kitts & Nevis	7,258
Swaziland	16,849
Taiwan	12,636
Thailand	14,743
Trinidad-Tobago	7,371
Uruguay	7,258
Zimbabwe	12,636

These allocations are based on the countries' historical trade to the United States. The allocations of the raw sugar tariff-rate quota to countries that are net importers of sugar are conditioned on receipt of the appropriate verifications of origin.

This allocation includes the following minimum quota-holding countries: Congo, Cote d'Ivoire, Gabon, Haiti, Madagascar, Papua New Guinea, Paraguay, St. Kitts & Nevis, and Uruguay.

The in-quota quantity of the tariff-rate quota for refined sugar for the period October 1, 2001–September 30, 2002, has been established by the Secretary of Agriculture at 171,788 metric tons, raw value (189,364 short tons), of which the Secretary has reserved 13,656 metric tons (15,053 short tons) for specialty sugars. Of the quantity not reserved for specialty sugars, a total of 10,300 metric tons (11,354 short tons) is being allocated to Canada and 2,954 metric tons (3,256 short tons) is being allocated to Mexico. An additional 137,788 metric tons of this quantity is being allocated to Mexico to fulfill obligations pursuant to the NAFTA. This allocation is subject to NAFTA rules of origin and to the condition that the total imports of raw and refined sugar from Mexico, combined, may not exceed 137,788 metric tons raw value. The remaining 7,090 metric tons (7,815 short tons) of the in-quota quantity not reserved for specialty sugars may be supplied by any country on a first-come, first-served basis, subject to any other provision of law. The 13,656 metric tons (15,053 short tons) reserved for specialty sugars is also not being allocated among supplying countries and is available on a first-come, first-served basis, subject to any other provision of law.

With respect to the tariff-rate quota for certain sugar-containing products maintained pursuant to additional U.S. Note 8 to Chapter 17 of the Harmonized Tariff Schedule, 59,250 metric tons (65,312 short tons) of sugar containing products is being allocated to Canada. The remaining in-quota quantity for this tariff-rate quota is available to other countries on a first-come, first-served basis. Conversion factor: 1 metric ton = 1.10231125 short tons.

Allen F. Johnson,

Chief Agriculture Negotiator.

[FR Doc. 01–24113 Filed 9–25–01; 8:45 am]

BILLING CODE 3190–01–P

DEPARTMENT OF TRANSPORTATION

Office of the Secretary

[Docket No. OST–1995–246]

North American Free Trade Agreement Conference

AGENCY: Office of the Secretary, DOT.

ACTION: Notice.

SUMMARY: This notice announces postponement of the North American Free Trade Agreement (NAFTA) information conference, which was to have taken place at the Hyatt Hotel in San Antonio, Texas, October 21–24, 2001.

Background: In anticipation of the United States moving forward with implementation of the land transportation provisions of the NAFTA, the Department of Transportation (DOT), in cooperation with Canada, Mexico, other federal agencies, and state and provincial representatives, announced a NAFTA information conference that would take place in San Antonio, Texas, October 21–24, 2001 to promote an understanding of the requirements for legal cross-border transport operations among the three NAFTA countries. The conference was announced in the **Federal Register** on July 13, 2001 (Vol. 66, No. 135; p. 36819).

Postponement: Due to the unforeseen events of September 11, 2001, the conference is postponed. A new date will be announced by DOT in the near future. More information can be obtained at the DOT website, which is located at *www.dot.gov/NAFTA*. Anyone who has registered for the conference may either receive a full refund of the registration fee or they may take no action and will be considered as registered for the conference at its future date. Those wishing to request a refund should contact the Free Trade Alliance San Antonio at 203 South St. Mary's Street, Suite 130, San Antonio, Texas 78205; by telephone at 210–229–9036, or by fax at 210–229–9724. To cancel reservations at the Hyatt Hotel, 123 Lasoya Street, San Antonio, Texas 78205, please telephone 210–222–1234 or send faxes to 210–227–4927. Those electing to remain registered for the conference will be contacted individually when a new date has been chosen. Additional information can be found on the Free Trade Alliance website at www.freetradealliance.org.

Address and Phone Numbers: For further information please contact Eddie Carazo, U.S. Department of Transportation, OST/X–20, Room 10300, 400 Seventh Street, SW., Washington, DC 20590, telephone (202) 366–2892, or fax (202) 366–7417.

Dated: September 19, 2001.

Bernestine Allen,

Director, Office of International, Transportation and Trade.

[FR Doc. 01–23989 Filed 9–25–01; 8:45 am]

BILLING CODE 4910–62–P

DEPARTMENT OF TRANSPORTATION

Coast Guard

[USCG 2001–9939]

Information Collections Under Review by the Office of Management and Budget (OMB): 2115–0637, 2115–0054, and 2115–0585

AGENCY: Coast Guard, DOT.

ACTION: Request for comments.

SUMMARY: In compliance with the Paperwork Reduction Act of 1995, this request for comments announces that the Coast Guard has forwarded the three Information Collection Reports (ICRs) abstracted below to OMB for review and comment. Our ICRs describe the information we seek to collect from the public. Review and comment by OMB ensure that we impose only paperwork burdens commensurate with our performance of duties.

DATES: Please submit comments on or before October 26, 2001.

ADDRESSES: Please send comments to (1) the Docket Management System (DMS), U.S. Department of Transportation (DOT), room PL–401, 400 Seventh Street SW., Washington, DC 20590–0001; and (2) the Office of Information and Regulatory Affairs (OIRA), Office of Management and Budget (OMB), 725 17th Street NW., Washington, DC 20503, to the attention of the Desk Officer for the USCG.

Copies of the complete ICRs are available for inspection and copying in public docket USCG 2001–9939 of the Docket Management Facility between 10 a.m. and 5 p.m., Monday through Friday, except Federal holidays; for inspection and printing on the internet at *http://dms.dot.gov;* and for inspection from the Commandant (G–CIM–2), U.S. Coast Guard, room 6106, 2100 Second

Street SW., Washington, DC, between 10 a.m. and 4 p.m., Monday through Friday, except Federal holidays.

FOR FURTHER INFORMATION CONTACT: Barbara Davis, Office of Information Management, 202–267–2326, for questions on this document; Dorothy Beard, Chief, Documentary Services Division, U.S. Department of Transportation, 202–366–5149, for questions on the docket.

SUPPLEMENTARY INFORMATION

Regulatory History

This request constitutes the 30-day notice required by OMB. The Coast Guard has already published [66 FR 34311 (June 27, 2001)] the 60-day notice required by OMB. That notice elicited no comments.

Request for Comments

The Coast Guard invites comments on the proposed collections of information to determine whether the collections are necessary for the proper performance of the functions of the Department. In particular, the Coast Guard would appreciate comments addressing: (1) The practical utility of the collections; (2) the accuracy of the Department's estimated burden of the collections; (3) ways to enhance the quality, utility, and clarity of the information that is the subject of the collections; and (4) ways to minimize the burden of collections on respondents, including the use of automated collection techniques or other forms of information technology.

Comments, to DMS or OIRA, must contain the OMB Control Numbers of all ICRs addressed. Comments to DMS must contain the docket number of this request, USCG 2001–9939. Comments to OIRA are best assured of having their full effect if OIRA receives them 30 or fewer days after the publication of this request.

Information Collection Requests

1. *Title:* Voyage-Planning for Tank-Barge Transits in the Northeast United States.

OMB Control Number: 2115–0637.

Type of Request: Extension of a currently approved collection.

Affected Public: Owners and operators of towing vessels.

Forms: This collection of information does not require the public to fill out Coast Guard forms, but does require the master of a towing vessel to prepare a voyage plan that is necessary for the safe operation of the vessel.

Abstract: The information collected for a voyage plan serves as a preventive measure and assists in ensuring the successful execution and completion of a voyage in the First Coast Guard District. This rule [33 CFR 165.100] applies primarily to towing vessels engaged in towing certain tank barges carrying petroleum oil in bulk as cargo.

Annual Estimated Burden Hours: The estimated burden is 439 hours a year.

2. *Title:* Welding and Hot-Work Permits; Posting of Warning Signs.

OMB Control Number: 2115–0054.

Type of Request: Extension of a currently approved collection.

Affected Public: Owners and operators of certain waterfront facilities and vessels.

Form: CG–4201.

Abstract: The information collected here helps ensure that waterfront facilities and vessels are in compliance with safety standards. A permit must be issued before welding or hot work on certain waterfront facilities; and the posting of warning signs is required on certain facilities.

Annual Estimated Burden Hours: The estimated burden is 226 hours a year.

3. *Title:* Approval of Alterations to Marine Portable Tanks; Approval of Non-Specification Portable Tanks.

OMB Control Number: 2115–0585.

Type of Request: Extension of a currently approved collection.

Affected Public: Owners of marine portable tanks and owners and designers of non-specification portable tanks.

Form: This collection of information does not require the public to fill out Coast Guard forms, but does require owners or manufacturers who want to alter marine portable tanks to request a written approval from the Coast Guard Marine Safety Center.

Abstract: The information helps us evaluate the safety of proposed alterations to marine portable tanks and to designs of such tanks used to transfer hazardous materials during offshore operations, such as those on drilling rigs. Respondents are those who wish to alter existing marine portable tanks or use non-specification portable tanks.

Annual Estimated Burden Hours: The estimated burden is 18 hours a year.

Dated: September 19, 2001.

V.S. Crea,

Director of Information and Technology.

[FR Doc. 01–24109 Filed 9–25–01; 8:45 am]

BILLING CODE 4910–15–P

DEPARTMENT OF TRANSPORTATION

Federal Aviation Administration

Notice Before Waiver With Respect to Land at Stafford Regional Airport, Stafford, VA

AGENCY: Federal Aviation Administration (FAA), DOT.

ACTION: Notice of intent of waiver with respect to land.

SUMMARY: The FAA is publishing notice of proposed release of 6.11 acres of excess land at the Stafford Regional Airport, Stafford, Virginia. There are no impacts to the Airport and the land is not needed for airport development as shown on the Airport Layout Plan. The excess surplus property is located in the approach for Runway 15 and will be used for the construction of the airport access road that will be built and maintained by Stafford County and the Virginia Department of Transportation. Appropriate restrictions will encumber the released property to ensure compatible land use.

DATES: Comments must be received on or before October 26, 2001.

ADDRESSES: Comments on this application may be mailed or delivered in triplicate to the FAA at the following address: Terry J. Page, Manager, FAA Washington Airports District Office, 23723 Air Freight Lane, Suite 210, Dulles, VA 20166.

In addition, one copy of any comments submitted to the FAA must be mailed or delivered to Mr. William C. Shelly, Coordinator, Stafford Regional Airport Authority, at the following address: Mr. William C. Shelly, Coordinator, Stafford Regional Airport Authority, c/o County of Stafford—Planning Office, Stafford, Virginia 22554–0370.

FOR FURTHER INFORMATION CONTACT: Mr. Terry Page, Manager, Washington Airports District Office, 23723 Air Freight Lane, Suite 210, Dulles, VA 20166; telephone (703) 661–1354, fax (703) 661–1370, email Terry.Page@faa.gov.

SUPPLEMENTARY INFORMATION: On April 5, 2000, new authorizing legislation became effective. That bill, the Wendell H. Ford Aviation Investment and Reform Act for the 21st Century, Public Law 10–181 (Apr. 5, 2000; 114 Stat. 61) (AIR 21) requires that a 30 day public notice must be provided before the Secretary may waive any condition imposed on an interest in surplus property.

Issued in Chantilly, Virginia on September 12, 2001.

Terry J. Page,

Manager, Washington Airports District Office, Eastern Region.

[FR Doc. 01–24099 Filed 9–25–01; 8:45 am]

BILLING CODE 4910–13–M

DEPARTMENT OF TRANSPORTATION

Federal Aviation Administration

Petitions for Exemption; Summary of Petitions Received

AGENCY: Federal Aviation Administration (FAA), DOT.

ACTION: Notice of petitions for exemption received.

SUMMARY: Pursuant to FAA's rulemaking provisions governing the application, processing, and disposition of petitions for exemption part 11 of Title 14, code of Federal Regulations (14 CFR), this notice contains a summary of certain petitions seeking relief from specified requirements of 14 CFR. The purpose of this notice is to improve the public's awareness of, and participation in, this aspect of FAA's regulatory activities. Neither publication of this notice nor the inclusion or omission of information in the summary is intended to affect the legal status of any petition or its final disposition.

DATES: Comments on petitions received must identify the petition docket number involved and must be received on or before October 5, 2001.

ADDRESSES: Send comments on any petition to the Docket Management System, U.S. Department of Transportation, Room Plaza 401, 400 Seventh Street, SW., Washington, DC 20590–0001. You must identify the docket number FAA–2000–XXXX at the beginning of your comments. If you wish to receive confirmation that FAA received your comments, include a self-addressed, stamped postcard.

You may also submit comments through the Internet to http://dms.dot.gov. You may review the public docket containing the petition, any comments received, and any final disposition in person in the Dockets Office between 9:00 a.m. and 5:00 p.m., Monday through Friday, except Federal holidays. The Dockets Office (telephone 1–800–647–5527) is on the plaza level of the NASSIF Building at the Department of Transportation at the above address. Also, you may review public dockets on the Internet at http://dms.dot.gov.

FOR FURTHER INFORMATION CONTACT: Forest Rawls (202) 267–8033, Sandy Buchanan-Sumter (202) 267–7271, or Vanessa Wilkins (202) 267–8029, Office of Rulemaking (ARM–1), Federal Aviation Administration, 800 Independence Avenue, SW., Washington, DC 20591.

This notice is published pursuant to 14 CFR §§ 11.85 and 11.91.

Issued in Washington, D.C., on September 21, 2001.

Richard McCurdy,

Acting Assistant Chief Counsel for Regulations.

Petitions for Exemption

Docket No.: FAA–2000–8185.

Petitioner: US Airways, Inc.

Section of 14 CFR Affected: 14 CFR 121.440.

Description of Relief Sought: To pursuant US Airways to meet the line check requirement of § 121.440 using an alternative line check program.

[FR Doc. 01–24094 Filed 9–25–01; 8:45 am]

BILLING CODE 4910–13–M

DEPARTMENT OF TRANSPORTATION

Federal Aviation Administration

[Summary Notice No. PE–2001–75]

Petitions for Exemption; Summary of Dispositions of Petitions Issued

AGENCY: Federal Aviation Administration (FAA), DOT.

ACTION: Notice of Dispositions of prior petitions.

SUMMARY: Pursuant to FAA's rulemaking provisions governing the application, processing, and disposition of petitions for exemption part 11 of Title 14, Code of Federal Regulations (14 CFR), this notice contains a summary of dispositions of certain petitions previously received. The purpose of this notice is to improve the public's awareness of, and participation in, this aspect of FAA's regulatory activities. Neither publication of this notice nor the inclusion or omission of information in the summary is intended to affect the legal status of any petition or its final disposition.

FOR FURTHER INFORMATION CONTACT: Forest Rawls (202) 267–8033, Sandy Buchanan-Sumter (202) 267–7271, or Vanessa Wilkins (202) 267–8029, Office of Rulemaking (ARM–1), Federal Aviation Administration, 800 Independence Avenue, SW., Washington, DC 20591.

This notice is published pursuant to 14 CFR §§ 11.85 and 11.91.

Issued in Washington, D.C., on September 21, 2001.

Richard McCurdy,

Acting, Assistant Chief Counsel for Regulations.

Dispositions of Petitions

Docket No.: FAA–2001–9928.

Petitioner: EAC Flight Corp.

Section of 14 CFR Affected: 14 CFR 135.152(a).

Description of Relief Sought/Disposition: To permit EAC to operate its Canadair Challenger 600 aircraft without a digital flight data recorder installed on the aircraft.

Denial, 09/14/2001, Exemption No. 7623

Docket No.: FAA–2001–10045.

Petitioner: Mountain Air Cargo, Inc.

Section of 14 CFR Affected: 14 CFR 91.203(a) and (b), 121.153(a)(1), and 135.25(a)(1).

Description of Relief Sought/Disposition: To permit MAC to temporarily operate U.S.-registered aircraft in domestic airline operations under part 121 or part 135 without the airworthiness or registration certificate onboard.

Denial, 09/10/2001, Exemption No. 7620

Docket No.: FAA–2001–9456.

Petitioner: ACM Aviation, Inc.

Section of 14 CFR Affected: 14 CFR 135.152(i)(1).

Description of Relief Sought/Disposition: To permit ACM to operate one Dassault Falcon 900C aircraft (Registration No. N901SS, Serial No. 187) and one Dassault Falcon 900EX aircraft (Registration No. N910MW, Serial No. 85) under part 135 without recording the parameters listed in § 135.152(h)(1) through (h)(57) within the ranges, accuracies, resolutions, and recording intervals specified in appendix F to part 135.

Denial, 09/13/2001, Exemption No. 7624

Docket No.: FAA–2001–10264.

Petitioner: Learjet, Inc.

Section of 14 CFR Affected: 14 CFR 145.45(f).

Description of Relief Sought/Disposition: To permit Learjet to place and maintain its inspection procedures manual in a number of fixed locations within its facility and assign copies to key individuals in lieu of giving copies to each of its supervisory and inspection personnel.

Grant, 09/13/2001, Exemption No. 7098A

Docket No.: FAA–2001–10334.

Petitioner: Parker Hannifin Corporation .

Section of 14 CFR Affected: 14 CFR 43.9(a)(4), 43.11(a)(3), appendix B to part 43, and § 145.57(a).

Description of Relief Sought/ Disposition: To permit Parket to use computer-generated electronic signatures in lieu of physical signatures to satisfy the signature requirements of FAA Form 8130–3, Airworthiness Approval Tag, when the form is used as approval for return to service.

Grant, 09/13/2001, Exemption No. 7096A

Docket No.: FAA–2001–10168.

Petitioner: Tennessee Technical Services, L.L.C.

Section of 14 CFR Affected: 14 CFR 145.45(f).

Description of Relief Sought/ Disposition: To permit TTS to place and maintain its Inspection Procedures Manual (IPM) in a number of fixed locations within its facility and assign IPMs to key individuals rather than giving a copy of its IPM to each of its supervisory and inspection personnel.

Grant, 09/13/2001, Exemption No. 7092A

Docket No.: FAA–2001–10410.

Petitioner: Columbia Helicopters, Inc.

Section of 14 CFR Affected: 914 CFR 145.45(f).

Description of Relief Sought/ Disposition: To permit Columbia to make its Inspection Procedures Manual available either electronically or in paper format in fixed locations rather than giving a copy to each of its supervisory and inspection personnel.

Grant, 09/13/2001, Exemption No. 7622

Docket No.: FAA–2001–10162.

Petitioner: Triad International Maintenance Corporation.

Section of 14 CFR Affected: 14 CFR 145.45(f).

Description of Relief Sought/ Disposition: To permit TIMCO to place and maintain its Inspection Procedures Manual (IPM) in technical libraries in its five facility locations and assign copies of the IPM to key individuals rather than giving a copy to each of its supervisory and inspection personnel.

Grant, 09/13/2001, Exemption No. 7621

[FR Doc. 01–24095 Filed 9–25–01; 8:45 am]

BILLING CODE 4910–13–M

DEPARTMENT OF TRANSPORTATION

Federal Aviation Administration

Cancellation of User Input Meeting to the Aviation Weather Technology Transfer (AWTT) Board

AGENCY: Federal Aviation Administration (FAA), Department of Transportation (DOT).

ACTION: Notice of cancellation of public meeting.

SUMMARY: The FAA had announced that it would hold an informal public meeting to seek aviation weather user input. The meeting was to be held in conjunction with the National Business Aviation Association (NBAA) conference in New Orleans, LA on September 18, 2001. The NBAA convention has been postponed. FAA is also postponing the meeting.

DATES: The meeting was to be held in Room 291 at the Ernest N. Morial Convention Center, 900 Convention Center Blvd., New Orleans, LA 70130 in conjunction with the National Business Aviation Association, Inc. (NBAA) annual convention. Times: 1–5 pm, on September 18, 2001. The meeting is now postponed and will be rescheduled. Notice of the rescheduled meeting will be published in the **Federal Register** notice.

FOR FURTHER INFORMATION CONTACT: Debi Bacon, Aerospace Weather Policy Division, ARS–100, Federal Aviation Administration, 800 Independence Ave., SW., Washington, DC 20591; telephone number (202) 385–7705; Fax: (202) 385–7701; e-mail: *debi.bacon@faa.gov.* Internet address: *http://www.debi.bacon@faa.gov.*

SUPPLEMENTARY INFORMATION: None.

* * * * *

Issued in Washington, DC on September 19, 2001.

Frances Sherertz,

Deputy Director, Aerospace Weather Policy and Standards Staff.

[FR Doc. 01–24100 Filed 9–25–01; 8:45 am]

BILLING CODE 4910–13–M

DEPARTMENT OF TRANSPORTATION

Federal Aviation Administration

Notice of Intent To Rule on Application 01–03–C–00–FOD To Impose and Use the Revenue From a Passenger Facility Charge (PFC) at Fort Dodge Regional Airport, Fort Dodge, IA

AGENCY: Federal Aviation Administration, (FAA), DOT.

ACTION: Notice of intent to rule on application.

SUMMARY: The FAA proposes to rule and invites public comment on the application to impose and use the revenue from a PFC at Fort Dodge Regional Airport under the provisions of the Aviation Safety and Capacity Expansion Act of 1990 (Title IX of the Omnibus Budget Reconciliation Act of 1990) (Public Law 101–508) and Part 158 of the Federal Aviation Regulations (14 CFR Part 158).

DATES: Comments must be received on or before October 26, 2001.

ADDRESSES: Comments on this application may be mailed or delivered in triplicate to the FAA at the following address: Federal Aviation Administration, Central Region, Airports Division, 901 Locust, Kansas City, MO 64106.

In addition, one copy of any comments submitted to the FAA must be mailed or delivered to Ms. Rhonda M. Chambers, Director of Aviation, at the following address: Fort Dodge Airport Commission, 1639 Nelson Avenue, Suite 2, Fort Dodge, Iowa 50501.

Air carriers and foreign air carriers may submit copies of written comments previously provided to the Fort Dodge Airport Commission, under section 158.23 of part 158.

FOR FURTHER INFORMATION CONTACT: Lorna Sandridge, PFC Program Manager, FAA, Central Region, 901 Locust, Kansas City, MO 64106, (816) 329–2641. The application may be reviewed in person at this same location.

SUPPLEMENTARY INFORMATION: The FAA proposes to rule and invites public comment on the application to impose and use the revenue from a PFC at the Fort Dodge Regional Airport under the provisions of the Aviation Safety and Capacity Expansion Act of 1990 (Title IX of the Omnibus Budget Reconciliation Act of 1990) (Public Law 101–508) and part 158 of the Federal Aviation Regulations (14 CFR part 158).

On August 30, 2001, the FAA determined that the application to impose and use the revenue from a PFC submitted by the Fort Dodge Airport Commission was substantially complete within the requirements of section 158.25 of part 158. The FAA will approve or disapprove the application, in whole or in part, no later than December 4, 2001.

The following is a brief overview of the application.

Level of the proposed PFC: $4.50.

Proposed charge effective date: January, 2002.

Proposed charge expiration date: April, 2008.

Total estimated PFC revenue: $284,903.

Brief description of proposed project(s): Construct Taxiways A and C; Land Acquisition and Relocation for the Runway Protection Zone.

Any person may inspect the application in person at the FAA office listed above under **FOR FURTHER INFORMATION CONTACT.**

In addition, any person may, upon request, inspect the application, notice and other documents germane to the application in person at the Fort Dodge Regional Airport.

Issued in Kansas City, Missouri on August 30, 2001.

George A. Hendon,

Manager, Airports Division Central Region.

[FR Doc. 01–24098 Filed 9–25–01; 8:45 am]

BILLING CODE 4910–13–M

DEPARTMENT OF TRANSPORTATION

Federal Aviation Administration

[Policy Statement Number PS–ACE100–2001–03]

Proposed Small Airplane Directorate Policy on Static Strength Substantiation of Composite Airplane Structure

AGENCY: Federal Aviation Administration, DOT.

ACTION: Notice of availability; request for comments.

SUMMARY: This notice announces a Federal Aviation Administration (FAA) proposed policy on static strength substantiation of composite airplane structure and reopens the comment period for the proposed policy. This notice advises the public, especially manufacturers of normal, utility, and acrobatic category airplanes, and commuter category airplanes used in non-scheduled service and their suppliers, that the FAA intends to adopt a new policy concerning static strength substantiation. This notice is necessary to advise the public of this FAA policy and give all interested persons an opportunity to present their views on it.

DATES: Send your comments by October 26, 2001.

DISCUSSION: On July 30, 2001, the Small Airplane Directorate issued a proposed policy statement. A notice concerning the proposed policy was published on August 7, 2001 (66 FR 41303). Unfortunately, the policy did not appear on the web site until September. We are reopening the comment period since the proposed policy statement is now available to the public and all manufacturers for their comments.

ADDRESSES: Copies of the proposed policy statement, PS–ACE100–2001–03, may be requested from the following: Small Airplane Directorate, Standards Office (ACE–110), Aircraft Certification Service, Federal Aviation Administration, 901 Locust Street, Room 301, Kansas City, MO 64106. The proposed policy statement is also available on the Internet at the following address http://www.faa.gov/programs__rsvp2 /smart/faa__home__page /certification/aircraft/small__airplane__ directorate__ news _proposed.html. Send all comments on this policy statement to the individual identified under **FOR FURTHER INFORMATION CONTACT.**

FOR FURTHER INFORMATION CONTACT: Lester Cheng, Federal Aviation Administration, Small Airplane Directorate, Regulations & Policy, ACE–111, 901 Locust Street, Room 301, Kansas City, Missouri 64106; telephone: (316) 946–4111; fax: 816–329–4090; e-mail: lester.cheng@faa.gov.

SUPPLEMENTARY INFORMATION:

Comments Invited

We invite your comments on this policy statement. Send any data or views as you may desire. Identify the Policy Statement Number PS–ACE100–2001–03 on your comments, and send two copies of any printed comments to the above address. The Small Airplane Directorate will consider all communications received on or before the closing date for comments. We may change the proposal contained in this notice because of the comments received.

You may also send comments to the following Internet address: 9-ACE-SSSCAS-Policy@faa.gov. Comments sent by fax or the Internet must contain ''Comments to proposed policy statement PS–ACE–100–2001–03'' in the subject line. You do not need to send two copies if you fax your comments or send them through the Internet. If you send comments over the Internet as an attached electronic file, format it in either Microsoft Word 97 for Windows or ASCII text. State what specific change you are seeking to the proposed policy memorandum and include justification (for example, reasons or data) for each request.

Issued in Kansas City, Missouri on September 13, 2001.

Michael Gallagher,

Manager, Small Airplane Directorate, Aircraft Certification Service.

[FR Doc. 01–24096 Filed 9–25–01; 8:45 am]

BILLING CODE 4910–13–P

DEPARTMENT OF TRANSPORTATION

Federal Aviation Administration

[Policy Statement Number PS–ACE100–2001–02]

Proposed Small Airplane Directorate Policy on Flammability Testing

AGENCY: Federal Aviation Administration, DOT.

ACTION: Notice of availability; request for comments.

SUMMARY: This notice announces a Federal Aviation Administration (FAA) proposed policy on flammability testing of materials used in small airplanes and reopens the comment period for the proposed policy. This notice advises the public, especially manufacturers of normal, utility, and acrobatic category airplanes, and commuter category airplanes used in non-scheduled service and their suppliers, that the FAA intends to adopt a new policy concerning flammability testing. This notice is necessary to advise the public of this FAA policy and give all interested persons an opportunity to present their views on it.

DATES: Send your comments by October 26, 2001.

DISCUSSION: On August 3, 2001, the Small Airplane Directorate issued a proposed policy statement. A notice was published asking for comments on the policy on August 14, 2001 (66 FR 42703). Unfortunately, the policy did not appear on the web site until September. We are reopening the comment period since the proposed policy statement is now available to the public and all manufacturers for their comments.

ADDRESSES: Copies of the proposed policy statement, PS–ACE100–2001–02, may be requested from the following: Small Airplane Directorate, Standards Office (ACE–110), Aircraft Certification Office, Federal Aviation Administration, 901 Locust, Room 301, Kansas City, MO 64106. The proposed policy statement is also available on the Internet at the following address: http://www.faa.gov/programs _rsvp2/smart/faa_ home_page/certification/ aircraft/small_airplane _directorate_news_proposed.html. Send all comments on this policy statement to the individual identified under **FOR FURTHER INFORMATION CONTACT.**

FOR FURTHER INFORMATION CONTACT: Leslie B. Taylor, Federal Aviation Administration, Small Airplane Directorate, Regulations & Policy, ACE–111, 901 Locust, Room 301, Kansas City, Missouri 64106; telephone (816) 329–

4134; fax: 816–329–4090; e-mail: leslie.b.taylor@faa.gov.

SUPPLEMENTARY INFORMATION:

Comments Invited

We invite your comments on this policy statement. Send any written data, views, or arguments as you may desire. Identify the Policy Statement Number PS–ACE100–2001–02 on your comments, and send two copies of any printed comments to the above address. The Small Airplane Directorate will consider all communications received on or before the closing date for comments. We may change the proposals contained in this notice because of the comments received.

You may also send comments to the following Internet address: 9–ACE–SADPFT–Policy@faa.gov. Comments sent by fax or the Internet must contain ''Comments to proposed policy statement PS–ACE–100–2001–02'' in the subject line. You do not need to send two copies if you fax your comments or send them through the Internet. Format in either Microsoft Word 97 for Windows or ASCII text any comments sent over the Internet as attached electronic files. State what specific change you are seeking to the proposed policy memorandum and include justification (for example, reasons or data) for each request.

Issued in Kansas City, Missouri on September 13, 2001.

Michael Gallagher,

Manager, Small Airplane Directorate, Aircraft Certification Service.

[FR Doc. 01–24097 Filed 9–25–01; 8:45 am]

BILLING CODE 4910–13–P

DEPARTMENT OF TRANSPORTATION

Federal Transit Administration

Federal Highway Administration

Supplemental Draft Environmental Impact Statement on Transportation Improvements in the Primary Transportation Corridor of the City and County of Honolulu, HI

AGENCIES: Federal Transit Administration and Federal Highway Administration, DOT.

ACTION: Notice of intent to prepare a Supplemental Draft Environmental Impact Statement (SDEIS).

SUMMARY: The Federal Transit Administration (FTA) and Federal Highway Administration (FHWA), in cooperation with the City and County of Honolulu Department of Transportation Services (DTS), intend to prepare a supplemental draft environmental impact statement (SDEIS) in accordance with the National Environmental Policy Act (NEPA) for proposed transportation improvements in the Primary Transportation Corridor of the City and County of Honolulu. The SDEIS will address the following proposed changes to the Bus Rapid Transit (BRT) Alternative selected as the Locally Preferred Alternative (LPA) by the Honolulu City Council on November 29, 2000:

- Addition of an In-Town BRT branch to serve Aloha Tower Marketplace and Kakaako Makai
- Realignment of a section of the In-Town BRT alignment from Ward Avenue to Pensacola Street
- Change the location of the H–1 BRT ramp from the Kaonohi Street overpass to a section of the freeway near Aloha Stadium

FOR FURTHER INFORMATION CONTACT: Ms. Donna Turchie, Senior Transportation Representative, Office of Planning and Program Development, Federal Transit Administration, Region IX, (415) 744–3115, Dr. Laura Kong, Environmental Specialist, Federal Highway Administration, Hawaii Division, (808) 541–2700, or Ms. Cheryl D. Soon, Director, Department of Transportation Services, City and County of Honolulu, (808) 523–4125.

SUPPLEMENTARY INFORMATION:

I. Background

The DTS is proposing transportation improvements in Oahu's primary transportation corridor. The primary transportation corridor extends from Kapolei in the Ewa District, past Pearl Harbor, Honolulu International Airport, downtown Honolulu, and continues eastward to the University of Hawaii at Manoa and Waikiki. The proposed action is intended to address existing and future transportation demand and capacity needs, support socioeconomic growth, improve public transit services, facilitate land use development, and support current planning activities and policies.

In August 2000, the Primary Corridor Transportation Project Major Investment Study/Draft Environmental Impact Statement (MIS/DEIS) was distributed for public review and comment. It should be noted that the MIS/DEIS Notice of Intent was published in the April 27, 1999 **Federal Register** and the notice of the availability of the MIS/DEIS for review and comment was published in the September 8, 2000 **Federal Register**.

On November 29, 2000, the Honolulu City Council selected the BRT Alternative as the Locally Preferred Alternative (LPA).

II. Proposed Changes to the LPA

A supplemental DEIS is being prepared because substantial changes have occurred in the proposed action that are relevant to environmental concerns. In response to comments received on the MIS/DEIS and the project subsequent to the selection of the LPA, the DTS proposes to add an In-Town BRT branch to serve Aloha Tower Marketplace and Kakaako Makai, the area makai of Ala Moana Boulevard. The new branch would begin at the Iwilei Transit Center, travel Koko Head onto Iwilei Road, turn Koko Head on to North King Street, and proceed to the Hotel Street Transit Mall. It then proceeds in the makai direction on Bishop Street to Aloha Tower Drive. From Aloha Tower Drive, the branch continues in the Koko Head direction on Ala Moana Boulevard and then turns in the makai direction onto Channel Street. The branch then turns in the Koko Head direction onto Ilalo Street and then turns in the mauka direction onto Ward Avenue and proceeds until Auahi Street. From this point, the branch follows the LPA Kakaako/Waikiki branch routing to its terminus in Waikiki. In the reverse direction the Kakaako Makai branch travels Ewa from Waikiki following the LPA Kakaako/Waikiki branch until Auahi Street at Ward Avenue. From Auahi Street/Ward Avenue, the Kakaako Makai branch travels Ewa in reverse of the Koko Head direction; except that, at the intersection of Bishop Street/Nimitz Highway, the branch turns Koko Head onto Nimitz Highway, then mauka onto Richards Street, and then follows the LPA Kakaako/Waikiki branch to the Iwilei Transit Center, where the new branch ends. If the STREAM technology is selected for the BRT vehicles, a traction power supply station (TPSS) would be required along the Kakaako Makai Alignment. The TPSS is a structure that houses the electrical equipment used to power the STREAM BRT vehicles.

The second change that will be addressed in the SDEIS is the realignment of a short section of the In-Town BRT alignment from Ward Avenue and Kapiolani Boulevard to South King Street and Pensacola Street.

The LPA included an exclusive H–1 Freeway BRT ramp at the Kaonohi Street overpass and a transit center at the former Kamehameha Drive-in Theater. A reversible BRT ramp from the section of the H–1 Freeway near Aloha Stadium is being proposed instead of these two elements.

III. Probable Effects

The proposed changes are likely to have adverse and beneficial impacts on the environment. It is anticipated at this time that the following issues will be of concern:

- Transportation
- Noise and air quality impacts
- Land use
- Archaeological, historic and cultural resources
- Hazardous materials
- Parks and recreation areas
- Coastal zones

The SDEIS is not intended to repeat all the analyses contained in the project's MIS/DEIS. Most analyses would be limited to the immediate study area of the Kakaako Makai branch, Pensacola Street alignment change, and Aloha Stadium ramp. System-level impacts (i.e., impacts of the entire BRT Alternative) would be discussed in the SDEIS, if the proposed changes would alter the results of any analysis provided in the MIS/DEIS.

Letters describing the proposed action and soliciting comments have been sent to appropriate Federal, State, and local agencies, and to private organizations and citizens who have previously expressed or are known to have interest in this proposal. To ensure that the full range of issues related to this proposed action are addressed and all significant issues identified, comments and suggestions are invited from all interested parties. Comments or questions concerning this proposed action and the EIS should be directed to the FTA, FHWA, or the DTS at the addresses provided above.

(Catalog of Federal Domestic Assistance Program Number 20.205, Highway Research, Planning, and Construction. The regulations implementing Executive Order 12372 regarding intergovernmental consultation on Federal programs and activities apply to this program.)

Issued on: September 20, 2001.

Leslie T. Rogers,

Regional Administrator.

[FR Doc. 01–24090 Filed 9–25–01; 8:45 am]

BILLING CODE 4910–57–M

DEPARTMENT OF TRANSPORTATION

National Highway Traffic Safety Administration

[Docket No. NHTSA–2001–10620]

Reports, Forms, and Record Keeping Requirements

AGENCY: National Highway Traffic Safety Administration (NHTSA), Department of Transportation.

ACTION: Request for public comment on proposed collection of information.

SUMMARY: Before a Federal agency can collect certain information from the public, it must receive approval from the Office of Management and Budget (OMB). Under procedures established by the Paperwork Reduction Act of 1995, before seeking OMB approval, Federal agencies must solicit public comment on proposed collections of information, including extensions and reinstatement of previously approved collections.

This document describes one collection of information for which NHTSA intends to seek OMB approval.

DATES: Comments must be received on or before November 26, 2001.

Addresses: Comments must refer to the docket notice numbers cited at the beginning of this notice and be submitted to Docket Management, Room PL–401, 400 Seventh Street, SW., Washington, DC 20590. Please identify the proposed collection of information for which a comment is provided, by referencing its OMB clearance Number. It is requested, but not required, that 2 copies of the comment be provided. The Docket Section is open on weekdays from 9 a.m. to 5 p.m.

FOR FURTHER INFORMATION CONTACT: For further information, contact Edward Jettner, NHTSA, 400 Seventh Street, SW., Room 5320, NPS–11, Washington, DC 20590. Mr. Jettner's telephone number is (202) 366–4917. Please identify the relevant collection of information by referring to its OMB Control Number.

SUPPLEMENTARY INFORMATION: Under the Paperwork Reduction Act of 1995, before an agency submits a proposed collection of information to OMB for approval, it must first publish a document in the **Federal Register** providing a 60-day comment period and otherwise consult with members of the public and affected agencies concerning each proposed collection of information. The OMB has promulgated regulations describing what must be included in such a document. Under OMB's regulation (at 5CFR 1320.8(d)), an agency must ask for public comment on the following:

(i) Whether the proposed collection of information is necessary for the proper performance of the functions of the agency, including whether the information will have practical utility;

(ii) The accuracy of the agency's estimate of the burden of the proposed collection of information, including the validity of the methodology and assumptions used;

(iii) How to enhance the quality, utility, and clarity of the information to be collected;

(iv) How to minimize the burden of the collection of information on those who are to respond, including the use of appropriate automated, electronic, mechanical, or other technological collection techniques or other forms of information technology, e.g. permitting electronic submission of responses.

In compliance with these requirements, NHTSA asks for public comments on the following proposed collections of information:

Title: Phase-in Production Reporting Requirements for Advanced Air Bags.

Type of Request: Extension of a currently approved collection.

Affected Public: Individuals, households, business, other for-profit, not-for-profit, farms, Federal Government and State, Local or Tribal Government.

OMB Control Number: 2127–0599.

Abstract: 49 U.S.C. 30111,30112, and 30117 authorize the issuance of Federal Motor Vehicle Safety Standards (FMVSS) and the collection of data which support their implementation. Using this authority, the agency issued a modification to FMVSS 208, Occupant Crash Protection, to require advanced air bags in accordance with the Transportation Equity Act of the 21st Century (TEA 21) which was enacted by the United States Congress in 1998.

A two-stage phase-in is included in FMVSS 208 to allow for the introduction of advanced air bags. Manufacturers must equip a certain percentage of their new vehicle fleets with advanced air bags and report their production to NHTSA according to the following schedule, arranged to provide introduction of advanced air bags in two discrete phases:

	Percent
Phase 1 Production Reporting	
First year (model year 2004), beginning September 1, 2003	35
Second year (model year 2005) beginning September 1, 2004 ..	65
Third year (model year 2006) beginning September 1, 2005.	
Phase 2 Production Reporting	100%
First year (model year 2008), beginning September 1, 2007	35
Second year (model year 2009) beginning September 1, 2008 ..	65
Third year (model year 2010) beginning September 1, 2009	100

For each report, the manufacturer will provide, in addition to the identity, addresses, etc., several numerical items of information. The information

includes, but is not limited to, the following items.

Total number of vehicles manufactured for sale during the preceding production year; and

Total number of vehicles manufactured during the production year that are in compliance with the regulatory requirements.

Estimated Annual Burden: 1260 hours.

Number of Respondents: 21.

Issued on: September 20, 2001.

Stephen R. Kratzke,

Associate Administrator for Safety Performance Standards.

[FR Doc. 01–23988 Filed 9–25–01; 8:45 am]

BILLING CODE 4910–59–P

DEPARTMENT OF TRANSPORTATION

National Highway Traffic Safety Administration

[Docket No. NHTSA–99–6583; Notice 3]

Cancellation of Public Workshop

AGENCY: National Highway Traffic Safety Administration.

ACTION: Cancellation of public workshop.

SUMMARY: We are issuing this notice to inform the public of the cancellation of the public workshop for the New Car Assessment Program (NCAP) on Consumer Braking Information. The workshop, scheduled for September 26, 2001, in Washington, DC, will not be held. The agency strongly urges all interested parties to submit written comments to the subject docket by October 15, 2001. These comments, and any data that are submitted, will be used to assist in finalizing plans for a pilot program on brake testing of model year 2003 vehicles.

DATES: We are canceling the public workshop scheduled for September 26, 2001.

FOR FURTHER INFORMATION CONTACT: Mr. Jeff Woods, Office of Safety Performance Standards, NPS–22, National Highway Traffic Safety Administration, 400 Seventh Street SW, Washington, DC 20590. Telephone: (202) 366–6206; Fax: (202) 366–4329, email: *jwoods@nhtsa.dot.gov*.

SUPPLEMENTARY INFORMATION:

Background

On July 17, 2001, we published a **Federal Register** Notice (66 FR 37253) requesting comments on our consumer braking information program for light vehicles that are currently subjected to the NCAP program. We also announced a public workshop for September 26, 2001, to discuss technical issues of this program. On September 4, 2001, the agency published a second notice (66 FR 46305), providing more details of the meeting. The purpose of the meeting was to have an open discussion on issues including driver variability, test surface variability, and the consumer information format, prior to the public preparing their formal comments and submitting them to the docket.

A number of people who had planned to attend the meeting have contacted NHTSA to tell us that they cannot travel to Washington at this time. Therefore, NHTSA has decided to cancel the public meeting scheduled for September 26, 2001. We believe we can have an effective public dialogue on this subject using the normal notice and comment procedures.

As stated in our July 17, 2001, Request for Comments notice, the comment period will close on October 15, 2001. We will review all of the comments regarding technical aspects of our draft test protocol and suggestions for methods of reporting braking information to consumers, and consider what additional research or testing may be appropriate in the near term to address any concerns that are raised. We do not have plans to reschedule the public meeting at this time, but will consider the need to do so once we have reviewed the comments that are submitted. We anticipate that future **Federal Register** notices and submissions to the docket will keep the public informed of our progress on this program, such as finalizing the test protocol and the format for such consumer information.

Availability of Relevant Documents

The July 17, 2001, Request for Comments notice for the NCAP Braking program has been placed in the docket. To obtain that notice, you may either visit the docket in Washington, DC, or query the Department of Transportation docket website.

The docket is located at Room PL–401, 400 Seventh Street, SW, Washington, DC. Docket hours are 9 a.m. to 5 p.m., Monday through Friday. The Docket Management System website is *http://dms.dot.gov/*. You should search for Docket No. 6583.

Written Comments

We urge all interested parties to provide written comments on this program, especially those that will help to improve the quality of the program. Please submit them by the comment closing date of October 15, 2001. Comments must refer to the Docket and Notice numbers cited at the beginning of this notice and be submitted to: Docket Management, Room PL–401, 400 Seventh Street, SW, Washington, D.C. 20590. The Docket Section is open on weekdays from 9:00 AM to 5:00 PM. Alternatively, you may submit your comments electronically by logging onto the Docket Management System website at *http://dms.dot.gov*. Click on ''Help & Information'' or ''Help/Info'' to view instructions for filing your comments electronically. Regardless of how you submit your comments, you should mention the docket number (6583) of this program.

Issued on: September 21, 2001.

Noble N. Bowie,

Acting Associate Administrator for Safety Performance Standards.

[FR Doc. 01–24101 Filed 9–25–01; 8:45 am]

BILLING CODE 4910–59–P

DEPARTMENT OF TRANSPORTATION

National Highway Traffic Safety Administration

[Docket No. NHTSA 2000–8459; Notice 2]

Continental General Tire, Inc.; Grant of Application for Decision That Noncompliance Is Inconsequential to Motor Vehicle Safety

Continental General Tire, Inc., (Continental) has determined that approximately 22,500 P235/75R15 Grabber AT OWL passenger tires supplied to the replacement market do not meet the labeling requirements mandated by Federal Motor Vehicle Safety Standard (FMVSS) No. 109, ''New Pneumatic Tires.''

Pursuant to 49 U.S.C. 30118(d) and 30120(h), Continental petitioned for a determination that this noncompliance is inconsequential to motor vehicle safety and filed an appropriate report pursuant to 49 CFR Part 573, ''Defect and Noncompliance Reports.''

Notice of receipt of the application was published, with a 30-day comment period, on January 2, 2001 in the **Federal Register** (66 FR 131). NHTSA received one comment on this application, which was submitted by Advocates for Highway and Auto Safety (Advocates).

FMVSS No. 109, paragraph S4.3 (e), requires that each tire shall have permanently molded into or onto both sidewalls the actual number of plies in the sidewall, and the actual number of plies in the tread area, if different.

According to Continental, the noncompliance with S4.3 (e) relates to the mold numbers 33316 and 33317,

which ran for the production period of March 28, 1999 through August 25, 2000 with an incorrect sidewall stamping. The stamping at the rim line read: Tread 5 plies—2 Steel + 2 Polyester + 1 Nylon. It should have read: Tread 4 Plies—2 Steel + 2 Polyester. Continental stated that the sidewalls of the tires have all the proper markings, except the subject plies, per 49 CFR Section 571.109, and that in all applications the tire service information is correct and no unsafe conditions would be created due to the noncompliance. Continental further stated that the tire label attached to the tread surface provides accurate information concerning tire size and design.

Advocates indicated in its comments (Docket No. NHTSA–8549–2) that events of the past year involving tires and sport utility vehicles point out a need to focus on the quality and quantity of consumer information provided on tires. Advocates stated that Continental did not provide information to substantiate its claim that no unsafe conditions would be created by this noncompliance. According to Advocates, Continental should be required to establish that it has not engaged in marketing tires with more plies in the tread and sidewall as being superior to tires with fewer plies in the tread and sidewall construction. Advocates also suggested that Continental's record of submission of petitions for inconsequential noncompliance with regard to tire labeling issues be reviewed since that company also petitioned the agency in a similar matter several months prior to this petition. Advocates indicated that, in this case, the agency or the petitioner must establish that the tire construction (number of plies in the sidewall and tread and the cord material) information is not of safety-related importance to consumers or that few consumers consider the tire construction information when making a tire purchase.

Actions by the agency since November 2000, in response to Congressional requirements, have addressed most of the concerns raised by Advocates in its docket submission. The Transportation Recall, Enhancement, Accountability, and Documentation (TREAD) Act of November 2000 required, among other things, that the agency initiate rulemaking to improve tire label information. In response to Section 11 of the TREAD Act, the agency published an Advance Notice of Proposed Rulemaking (ANPRM) in the **Federal Register** on December 1, 2000 (65 FR 75222). The agency received more than 20 comments addressing the ANPRM, which sought comments on the tire labeling information required by 49 CFR Sections 571.109 and 571.119, Part 567, Part 574, and Part 575. Most of the comments were from motor vehicle and tire manufacturers, although several private citizens and consumer interest organizations responded to the ANPRM. With regard to the tire construction labeling requirements of FMVSS 109, S4.3 (d) and (e), most commenters indicated that the information was of little or no safety value to consumers. However, the tire construction information is valuable to the tire re-treading, repair, and recycling industries, according to several trade groups representing tire manufacturing. The International Tire and Rubber Association, Inc. (ITRA) indicated that the tire construction information is used by tire technicians to determine the steel content of a tire and to select proper retread, repair, and recycling procedures.

To address Advocates' request for tire marketing information, Continental indicated that the company has not promoted tires with the construction characteristics mistakenly molded into the subject tires. According to Continental, the company does not build tires of that construction type for public consumption (Tread: 5 plies—2 plies steel + 2 plies Polyester + 1 ply Nylon). With regard to Advocates' suggestion that Continental's petition record be reviewed, Continental indicated that it petitioned the agency twice in the recent past for a determination of inconsequential noncompliance involving tire construction labeling issues. These include the petition associated with this Notice, dated October 16, 2000, and a petition dated August 15, 2000, which was granted on August 9, 2001 (66 FR 41930).

In addition to the written comments solicited by the tire labeling ANPRM, the agency conducted a series of focus groups, as required by TREAD, to examine consumer perceptions and understanding of tire labeling. It was determined that few of the focus group participants had knowledge of the information molded into the tire sidewall with the exception of the tire brand name, tire size, and tire pressure.

Based on the information obtained from comments to the ANPRM and the consumer focus groups, we concur that it is likely that few consumers are influenced by the tire construction information (number of plies and cord material in the sidewall and tread plies) provided on the tire label when making a motor vehicle or tire purchase decision. However, the tire repair, retread, and recycling industries do use the tire construction information.

The agency believes that the true measure of inconsequentiality to motor vehicle safety in this case is the effect of the noncompliance on the operational safety of vehicles on which these tires are mounted. The safety of people working in the tire retread, repair, and recycling industries must also be considered. Although tire construction affects tire strength and durability, neither the agency nor the tire industry provides information relating the strength and durability of a tire to the number and types of plies in the tread and sidewall. Therefore, tire dealers and customers should consider the tire construction information along with other information such as the load capacity, tread wear, temperature, and traction when assessing performance capabilities of various tires.

In the agency's judgment, the incorrect labeling of the tire construction information will have an inconsequential effect on motor vehicle safety. The agency believes the safety of the users of these tires as replacements will not be adversely affected by the noncompliance because most consumers do not base tire purchases or vehicle operation parameters on tire construction information. The agency reached the conclusion that the noncompliance will not have a significant effect on the safety of the tire retread, repair, and recycling industries. The use of steel cord construction in the sidewall and tread is the primary safety concern of these industries, according to ITRA. In this case, the steel used in the construction of the tires is properly labeled.

In consideration of the foregoing, NHTSA has decided that the burden of persuasion has been met and that the noncompliance is inconsequential to motor vehicle safety. Accordingly, Continental's application is granted and the applicant is exempted from providing the notification of the noncompliance that would be required by 49 U.S.C. 30118, and from remedying the noncompliance, as would be required by 49 U.S.C. 30120.

(49 U.S.C. 301118, 301120; delegations of authority at 49 CFR 1.50 and 501.8)

Issued on: September 20, 2001.

Stephen R. Kratzke,

Associate Administrator for Safety Performance Standards.

[FR Doc. 01–24089 Filed 9–25–01; 8:45 am]

BILLING CODE 4910–59–P

DEPARTMENT OF TRANSPORTATION

National Highway Traffic Safety Administration

[Docket No. NHTSA–99–6271; Notice 2]

Safeline Corporation; Denial of Applications for Decision of Inconsequential Noncompliance

Safeline Corporation, of Denver, Colorado, has determined that a number of child restraint systems fail to comply with sections of Federal Motor Vehicle Safety Standard (FMVSS) No. 213, ''Child Restraint Systems,'' and has filed appropriate reports pursuant to 49 CFR Part 573, ''Defects and Noncompliance Reports.'' Safeline also applied to be exempted from the notification and remedy requirements of 49 U.S.C. Chapter 301—''Motor Vehicle Safety'' on the basis that the noncompliances are inconsequential to safety.

Safeline has identified two noncompliances, and has filed separate applications for each of these conditions. Notice of receipt of the applications was published on October 7, 1999, in the **Federal Register** (64 FR 54727). We received one comment, from the Center for Auto Safety (CAS), which opposed granting the applications.

Condition No. 1: Omission of Air Bag Warning Label. FMVSS No. 213 has required rear-facing child restraints to be labeled with an air bag warning since August 1994 (59 FR 7643). Beginning on August 15, 1994, S5.5.2(k) of FMVSS No. 213 required all rear-facing child restraint systems to have a label warning the consumer not to place the rear-facing child restraint system in the front seat of a vehicle that has a passenger side air bag, and a statement describing the consequences of not following the warning. These statements were required to be on a red, orange, or yellow contrasting background, and placed on the side of the restraint designed to be adjacent to the front passenger door of a vehicle, visible to a person installing the rear-facing child restraint system in the front passenger seat.

This labeling requirement was revised in 1996 (61 FR 60206) to require an enhanced, larger, and much more prominent warning on a distinct label. In the case of each child restraint system that can be used in a rear-facing position and is manufactured on or after May 27, 1997, S5.5.2(k)(4) of FMVSS No. 213 requires this label to be permanently affixed to the outer surface of the cushion or padding in or adjacent to the area where a child's head would rest, so that the label is plainly visible and readable. The text portion of this label consists of a heading reading ''WARNING'', with the following messages under that heading:

DO NOT place rear-facing child seat on front seat with air bag.

DEATH OR SERIOUS INJURY can occur.

The back seat is the safest place for children 12 and under.

Opposite the text, the warning label has a pictogram showing an inflating air bag striking a rear-facing child seat, surrounded by a red circle with a slash across it. The label must also conform to size and color requirements specified in S5.5.2(k)(4)(i) through S5.5.2(k)(4)(iii).

Safeline has notified us that between June 14, 1997 and September 15, 1997, it sold between 750 and 900 Sit'n'Stroll Child Restraints, Model 3240, that do not have the revised air bag warning label required by S5.5.2(k)(4) of FMVSS No. 213. The noncompliance occurred because the seat cover assemblies for the affected units were manufactured prior to May 27, 1997, consistent with Safeline's normal production cycle and prior to the effective date of the new requirement. These work in progress seat cover assemblies were then used in final assembly subsequent to May 27, 1997.

Safeline supports its application for inconsequential noncompliance with the following:

> Because of the significant lapse in time since the noncompliance, the products are no longer being used in the rear facing seating configuration. The purpose of the air bag warning statement is to prevent children from being placed rear facing in the front seat of a vehicle equipped with a passenger side air bag. Since it is recommended children remain rear facing for at least 12 months, and it has been 24 months since the products have been sold, it is likely these units are no longer being used in the rear facing position.
>
> Seat cover subassemblies were manufactured prior to May 27, 1997.
>
> Quantity of units not complying with amended rule is small. Between 750 and 900 units were sold that do not comply with the requirements.
>
> Because existing warning statements are found on the labels of the product and in the instruction manual. While Safeline Corporation strongly concurs the new air bag warning statement is an effective enhancement in the proper usage of child restraint systems, the previously existing warnings clearly state the hazards of placing a rear facing child restraint in a seating position with an air bag. Additionally, the exposure provided by the widespread national media campaign has been effective in educating parents of the dangers regarding the placement of rear facing child restraint systems in vehicles with air bags.
>
> The probability of a second hand owner receiving information through a recall notification is unlikely. Thus, the likelihood is small that a second hand owner, using the product in the rear facing position, would actually receive the recall notification.

Discussion

We are denying Safeline's application for the following reasons:

In an issue critical to safety as air bags and infant seating, Safeline's failure to incorporate the air bag warning label required in S5.5.2(k) cannot be deemed as inconsequential to safety. The potential danger of passenger-side air bags and children restrained in rear-facing child restraints placed in the front seat of vehicles has been of utmost concern to the agency. To address this concern, in 1994 we amended both FMVSS No. 213 and FMVSS No. 208 to require manufacturers of child restraints and motor vehicles to warn owners against placing rear-facing child restraints in front seats of vehicles equipped with passenger-side air bags. The requirements addressing warning labels, printed instructions, and information in the vehicle owner's manual pertaining to air bags and child restraints are necessary to maximize the safety of infants and young children traveling in motor vehicles equipped with air bags. Each of these warnings was developed with care to ensure that the specific content and location of the labels and instructions clearly and concisely convey the hazards of placing rear-facing child restraints in air bag-equipped seating positions.[1]

We have also worked closely with both vehicle and child restraint manufacturers and others in the child passenger safety community to reduce the likelihood that a rear-facing infant restraint would be placed in a vehicle seating position that has an air bag. Through media advisories, consumer information fact sheets, and other means, the child passenger safety community has taken measures to educate the public regarding the detrimental effects of an air bag when it strikes the seat back of a rear-facing infant restraint.

Despite these concerted efforts, between 1995 and March 1, 2001, 19 children have been fatally injured in crashes where their rear-facing child restraints were installed in a seating position that was equipped with an air bag that had deployed. We are aware of another eight children who have

[1] As noted above, FMVSS No. 213 has required rear-facing child restraints to be labeled with an air bag warning since August 1994 (59 FR 7643). The labeling requirement was revised in 1996 (61 FR 60206) to require an enhanced and much more prominent warning on a distinct label. The noncomplying units have labels that conform to the earlier requirements.

sustained serious, but nonfatal, injuries. These numbers might have been even higher had an enhanced warning label not been provided. We cannot excuse Safeline's acknowledged noncompliance of using seat pads without the required air bag warning label, given the grave potential consequences should a parent, failing to be warned mistakenly place a child in a rear-facing child restraint in a seating position equipped with an air bag that subsequently deploys in a crash.

While Safeline acknowledges that the noncompliance has the potential to reduce the likelihood of a parent correctly installing the product, and concurs that the new air bag warning statement is an effective enhancement in the proper usage of child restraint systems, it contends that ''given the small number of units without the airbag warning statement, the redundancy of the warning on the product, the overall nationwide media campaign on child restraint/airbag interaction, and time elapsed since the product was first used by the consumer, this noncompliance does not create a significant risk or any potentially negative consequences to the public.'' Safeline's contention that the ''small number'' of noncomplying units supports granting its inconsequentiality petition is without merit. In ruling on inconsequentiality petitions, we consider the potential consequences of the noncompliance, rather than the number of vehicles or items of equipment that are affected. In the case of this noncompliance, the consequence of a parent not knowing of the dangers of placing a rear-facing child restraint at a seating position equipped with an air bag are potentially fatal. Thus, we do not accept the argument that this noncompliance is inconsequential for safety because of the relatively small number of units involved.

In its comments, the Center for Auto Safety (CAS) disagreed with Safeline's claim that ''because of the significant lapse in time since the noncompliance, the products are no longer being used in the rear-facing seating configuration.'' CAS noted that:

> Safeline fails to take into account the fact that several families may have had subsequent births in the past twenty-four months and choose to use the Sit'n'Stroll for these infants. Nor does Safeline consider other real life scenarios, in which infants under the age of twelve months are potentially using the Sit'n'Stroll in its rear-facing configuration. For instance, persons who are child care providers may be using the Sit'n'Stroll to transport multiple infants. Also, several families using the Sit'n'Stroll may have sold the child safety seat or donated it to a state agency or organization for another family to use. Therefore, the fact that twenty-four months have elapsed since the distribution of the nonconforming child seats onto the market is an insignificant fact.

We believe that the points raised by CAS are valid. Accordingly, we are not convinced that Safeline's claim that the nonconforming Sit'n'Strolls ''likely * * * are no longer being used in the rear facing position.'' For the aforementioned reasons, this aspect of the petition is denied.[2]

Condition No. 2: Certification of Child Restraint to 25 Pounds in Rear-Facing Position. S7.1(c) of FMVSS No. 213 states that:

> A child restraint that is recommended by its manufacturer in accordance with S5.5 for use either by children in a specified mass range that includes any children having a mass greater than 10 kg but not greater than 18 kg, or by children in a specified height range that includes any children whose height is greater than 850 mm but not greater than 1100 mm, is tested with a 9-month-old test dummy conforming to part 572 subpart J, and a 3-year-old test dummy conforming to part 572 subpart C and S7.2, provided, however, that the 9-month-old test dummy is not used to test a booster seat.

Safeline recommends use of its Sit'n'Stroll rear-facing for children weighing up to 25 lbs. In October 1998, we requested that Safeline identify the dummy that was utilized to evaluate the Sit'n'Stroll child restraint, and provide a copy of each test report and any engineering analysis that formed the basis of its certification of the Sit'n'Stroll to the performance requirements of FMVSS No. 213 for recommended usage greater than 22 pounds in the rear-facing seating configuration. In response, Safeline submitted test data from Calspan Corporation (now Veridian Engineering) and the University of Michigan which reflected failures of seat back angle requirements and/or structural integrity requirements in every instance where a 3-year-old dummy was positioned in the rear-facing position. However, passing test results were achieved for these requirements with a 20-pound TNO dummy weighted to 25 pounds and positioned in the rear-facing position. Safeline concluded that the Sit'n'Stroll child restraint model ''could safely be used in the rear-facing position at a weight not to exceed 25 pounds.''

In June 1999, we notified Safeline that the Sit'n'Stroll child restraint does not appear to meet the applicable requirements of FMVSS No. 213 with the 3-year-old dummy in the rear-facing position. All Sit'n'Stroll child restraints, model 3240, manufactured by Safeline between November 1996 and June 1999 have been recommended for use for up to 25 pounds in the rear-facing position. A total of 21,759 units are affected by this noncompliance.

Safeline supports its application for inconsequential noncompliance with the following:

> The Sit'n'Stroll meets all rear facing testing criteria using a 20-pound TNO dummy weighted to 25 pounds. Our testing has shown that an infant dummy weighted to 25 pounds had minimal additional affects on the seat back rotation angle results relative to the dummy specified in FMVSS No. 213. The maximum seat back rotation angle we have experienced in dynamic testing is significantly less than the allowable 70-degree maximum. These results provided the confidence to previously recommend the usage of the Sit'n'Stroll for children weighing no more than 25 pounds in the rear facing seating position. Safeline Corporation is aware of no incidents, claims, reports, injuries, fatalities or warranty issues of children 22 to 25 pounds being injured or harmed in any way by the extended use of the Sit'n'Stroll.
>
> The large surface area of the base of the Sit'n'Stroll reduces the protrusion of the child restraint into the automobile's seat. The Sit'n'Stroll's unique design—the wide, uninterrupted base surface area—relative to other convertible child restraints, produces seat back rotation angle results well below the maximum allowable criteria by more effectively distributing the dynamic forces.

Discussion

We are denying Safeline's application for the following reasons:

FMVSS No. 213 specifies performance requirements that a child restraint must meet when tested with dummies representing the range of children for which that child restraint is recommended. Under FMVSS No. 213's requirements, child restraints recommended for use by children weighing over 22 lb are tested with a test dummy representing a 3-year-old child. So tested, they must meet all performance requirements of the standard, including limits on how far they allow the rear-facing dummy's head to extend beyond and above the

[2] Safeline also suggests that its petition should be granted because ''[t]he probability of a second hand owner receiving information through a recall notification is unlikely. Thus, the likelihood is small that a second hand owner, using the product in a rear facing position, would actually receive the recall notification.'' We reject this argument. The argument implies that even the most egregious noncompliance or defect should be inconsequential if the item of equipment is owned ''second hand.'' Such an argument has no merit and has no bearing on whether a noncompliance is inconsequential to safety. Further, Safeline can make careful effort to ensure that as many owners as possible receive notice of a recall. Safeline would be required to directly notify Sit'n'Stroll owners of the recall (even second hand owners) who have registered themselves with Safeline pursuant to the owner registration program which FMVSS No. 213 requires manufacturers to implement.

top of the child restraint in a 30-mph dynamic test. (This document refers to these limits as the head excursion limits.) The head excursion limits are set forth in S5.1.3.2 of FMVSS No. 213, as follows:

S5.1.3.2. Rear-facing child restraint systems. In the case of each rear-facing child restraint system, all portions of the test dummy's torso shall be retained within the system and neither of the target points on either side of the dummy's head and on the transverse axis passing through the center of mass of the dummy's head and perpendicular to the head's midsagittal plane, shall pass through the transverse orthogonal planes whose intersection contains the forward-most and top-most points on the child restraint system surfaces.

The standard permits manufacturers to recommend rear-facing child restraints for children weighing more than 10 kg (22 lb). However, in making its certification of compliance with the standard, a manufacturer must ensure that the restraint meets the requirements of FMVSS No. 213 when tested with the appropriate test dummy (i.e., in the case at hand, the 3-year-old dummy). The test procedure incorporating the dummy has been determined to be a reliable and repeatable method for objectively determining a system's performance in an actual crash. The test procedure meets the need for motor vehicle safety by ensuring that rear-facing child restraints are able to maintain structural integrity when restraining heavy infants and safely limit head excursion of the children in a crash.[3]

Safeline knew that its product had to meet FMVSS No. 213 when tested with the 3-year-old dummy. On August 18, 1992, in response to a letter from Safeline, the agency sent the manufacturer an interpretation of FMVSS No. 213 affirming that the 3-year-old test dummy must be used to test Safeline's rear-facing restraints. Other agency interpretation letters and **Federal Register** rulemaking documents issued before and after the August 1992 letter have also affirmed use of the 3-year-old test dummy to test child restraints designed for children weighing more than 22 lb (*e.g.,* April 22, 1992 letter to Century Products Company; April 29, 1999 denial of petition for rulemaking from SafetyBelt Safe USA (64 FR 23037)). NHTSA's 1992 letter to Safeline called Safeline's attention to the possibility that the restraint's seat back might be too low to enable the restraint to meet the head excursion limit when dynamically tested rear-facing with the 3-year-old dummy, and suggested that Safeline consider raising the height of the seat back to avoid any potential compliance problem with the excursion limit. Safeline's decision to forego testing with the 3-year-old dummy following our letter and the test failures led to its noncompliance.

As noted above, in October 1998 we requested that Safeline identify the dummy that was utilized to evaluate the Sit'n'Stroll child restraint and provide a copy of each test report and any engineering analysis that formed the basis of Safeline's certification of the Sit'n'Stroll for recommended usage greater than 22 pounds in the rear-facing configuration. Safeline provided copies of five test reports that documented a series of 12 tests performed at the Calspan Corporation and at the University of Michigan. During these tests, the Sit'n'Stroll was tested seven times in the rear-facing configuration with the 3-year-old dummy conforming to part 572 subpart C as prescribed in FMVSS No. 213. In each instance, there was a structural failure of the lap belt anchor tabs on the child restraint. Because the vehicle lap belt disengaged from the anchor tabs, there was excessive seat back rotation during the dynamic test. These results would have clearly constituted failure of the Sit'n'Stroll to meet the performance criteria of FMVSS No. 213 if they had been conducted as compliance tests.[4]

Given that meeting FMVSS No. 213 is based upon testing conducted with a 3-year-old dummy for child restraints recommended for use by children weighing more than 22 pounds but less than 40 pounds, and that Safeline provided test results showing that the Sit'n'Stroll failed to meet the performance requirements of FMVSS No. 213 in each of seven tests conducted with the Sit'n'Stroll positioned rear-facing, Safeline had a compelling basis upon which to decide that there was a noncompliance and to file a Part 573 report. There are unknown safety consequences at this time in using a weighted 20-pound test dummy to determine the suitability of a restraint for infants weighing up to 25 pounds. The consequences, should the Sit'n'Stroll fail structurally resulting in excessive seat back rotation as was shown in Safeline's own testing, are potentially serious. The noncompliance engenders concern as to whether the Sit'n'Stroll can maintain structural integrity or adequately limit the head excursion of children weighing up to 25 lb or otherwise protect them. For the aforementioned reasons, we cannot find the noncompliance to be inconsequential to safety.

In consideration of the foregoing, we have decided that the applicant has not met its burden of persuasion that the noncompliances it describes are inconsequential to safety. Accordingly, its applications are hereby denied. Further, Safeline must now fulfill its obligation to notify and remedy under 49 U.S.C. 30118(d) and 30120(h).

Authority: 49 U.S.C. 30118(d) and 30120(h); delegations of authority at 49 CFR 1.50 and 501.8

Issued on: September 20, 2001.

Stephen R. Kratzke,

Associate Administrator for Safety Performance Standards.

[FR Doc. 01–24088 Filed 9–25–01; 8:45 am]

BILLING CODE 4910–59–P

[3] There are a number of rear-facing restraints on the market today that are recommended for children weighing 25 lb, and sometimes up to 30 lb. The 3-year-old dummy is used to test these restraints.

[4] The Sit'n'Stroll was tested only three times with a 9-month-old dummy weighted to 25–28 pounds (the 9-month-old dummy typically weighs 20 pounds), twice in the rear-facing configuration and once in the forward-facing configuration. In each of these three tests, the restraint performed acceptably when evaluated in accordance with the procedures of FMVSS No. 213.

DEPARTMENT OF TRANSPORTATION

Research and Special Programs Administration

[Cooperative Agreement DTRS656–00–H–0004]

Quarterly Performance Review Meeting on The Cooperative Agreement ''Better Understanding of Mechanical Damage in Pipelines''

AGENCY: Research and Special Programs Administration (RSPA), DOT.

ACTION: Notice of meeting cancellation.

As a result of the tragic events of last week, the uncertainty of air travel, and the travel restrictions many companies have placed on their employees, the quarterly performance review meeting to report on progress with research titled ''Better Understanding of Mechanical Damage in Pipelines,'' scheduled for September 27, 2001, is canceled. This work is being managed by the Gas Research Institute (GTI) and performed by Battelle Memorial Institute along with the Southwest Research Institute. The meeting was previously announced in the **Federal Register** (66 FR 39392; July 30, 2001) and was to be held at the Sheraton Buckhead Hotel, 3405 Lenox Road, NE., Atlanta, GA beginning at 9 a.m.

FOR FURTHER INFORMATION CONTACT: Lloyd W. Ulrich, Agreement Officer's Technical Representative, Office of Pipeline Safety, telephone: (202) 366–

4556, FAX: (202) 366–4566, e-mail: *lloyd.ulrich@rspa.dot.gov.* You may also contact Dr. Keith Leewis, GTI, telephone: (847) 768–0890, e-mail: keith.leewis@gastechnology.org.

Issued in Washington, DC on September 19, 2001.

Jeffrey D. Wiese,

Acting Associate Administrator for Pipeline Safety.

[FR Doc. 01–24087 Filed 9–25–01; 8:45 am]

BILLING CODE 4910–60–P

DEPARTMENT OF VETERANS AFFAIRS

[OMB Control No. 2900–0032]

Proposed Information Collection Activity: Proposed Collection; Comment Request

AGENCY: Veterans Benefits Administration, Department of Veterans Affairs.

ACTION: Notice.

SUMMARY: The Veterans Benefits Administration (VBA), Department of Veterans Affairs (VA), is announcing an opportunity for public comment on the proposed collection of certain information by the agency. Under the Paperwork Reduction Act (PRA) of 1995, Federal agencies are required to publish notice in the **Federal Register** concerning each proposed collection of information, including each proposed extension of a currently approved collection, and allow 60 days for public comment in response to the notice. This notice solicits comments on information needed to ensure loans that were closed on prior approval and automatic basis are in compliance with the law.

DATES: Written comments and recommendations on the proposed collection of information should be received on or before November 26, 2001.

ADDRESSES: Submit written comments on the collection of information to Nancy J. Kessinger, Veterans Benefits Administration (20S52), Department of Veterans Affairs, 810 Vermont Avenue, NW., Washington, DC 20420 or e-mail *irmnkess@vba.va.gov.* Please refer to ''OMB Control No. 2900–0032'' in any correspondence.

FOR FURTHER INFORMATION CONTACT: Nancy J. Kessinger at (202) 273–7079 or FAX (202) 275–5947.

SUPPLEMENTARY INFORMATION: Under the PRA of 1995 (Public Law 104–13; 44 U.S.C., 3501–3520), Federal agencies must obtain approval from the Office of Management and Budget (OMB) for each collection of information they conduct or sponsor. This request for comment is being made pursuant to Section 3506(c)(2)(A) of the PRA.

With respect to the following collection of information, VBA invites comments on: (1) Whether the proposed collection of information is necessary for the proper performance of VBA's functions, including whether the information will have practical utility; (2) the accuracy of VBA's estimate of the burden of the proposed collection of information; (3) ways to enhance the quality, utility, and clarity of the information to be collected; and (4) ways to minimize the burden of the collection of information on respondents, including through the use of automated collection techniques or the use of other forms of information technology.

Title: Report and Certification of Loan Disbursement, VA Form 26–1820.

OMB Control Number: 2900–0032.

Type of Review: Extension of a currently approved collection.

Abstract: VA Form 26–1820 is completed by lenders closing VA guaranteed and insured loans under the automatic or prior approval procedures. Lenders are required to submit with the form, a copy of the loan application (showing income, assets, and obligations) which the lender requires the borrower to execute when applying for the loan; original employment and income verifications obtained from the borrower's place of employment; original verification of assets; and original credit report.

Affected Public: Individuals or households.

Estimated Annual Burden: 50,000 hours.

Estimated Average Burden Per Respondent: 15 minutes.

Frequency of Response: One-time.

Estimated Number of Respondents: 200,000.

Dated: September 11, 2001.

By direction of the Secretary.

Barbara H. Epps,

Management Analyst, Information Management Service.

[FR Doc. 01–24072 Filed 9–25–01; 8:45 am]

BILLING CODE 8320–01–P

Federal Register

Wednesday,
September 26, 2001

Part II

Department of Health and Human Services

42 CFR Part 124

Compliance Alternatives for Provision of Uncompensated Services; Final Rule

DEPARTMENT OF HEALTH AND HUMAN SERVICES

42 CFR Part 124

RIN 0906–AA52

Compliance Alternatives for Provision of Uncompensated Services

AGENCY: Health Resources and Services Administration, HHS.

ACTION: Final rule.

SUMMARY: The rules below revise a compliance alternative applicable to health care facilities with Hill-Burton uncompensated services obligations. The revised compliance alternative provides a more flexible compliance standard for facilities that principally serve nonpaying patient populations by reducing the amount of time needed to qualify for certification under the alternative and by providing for a provisional certification, where a facility is unable to qualify for full certification. The rules below also provide a compliance alternative for obligated facilities with histories of uncompensated services deficits, to enable them to make up the deficits on a timely basis. These revisions have the effect of making it easier for facilities with uncompensated services obligations to meet those obligations, while still ensuring the availability of uncompensated services to persons unable to pay.

DATES: This rule is effective on September 26, 2001.

FOR FURTHER INFORMATION CONTACT: Mr. Eulas Dortch, 301–443–5656.

SUPPLEMENTARY INFORMATION: On October 19, 2000, the Secretary of Health and Human Services published a Notice of Proposed Rulemaking (NPRM) proposing to revise certain requirements relating to the compliance by health care facilities that received assistance under Title VI or Title XVI of the Public Health Service Act, 42 U.S.C. 291, *et seq.*, and 42 U.S.C. 300q, *et seq.* with their assurance, given as a condition of such assistance, that they would provide a reasonable volume of services to persons unable to pay therefor. 65 FR 62976. The regulations establishing the requirements for complying with this assurance, which is commonly known as the ''uncompensated services'' assurance, are codified at 42 CFR part 124, subpart F. The NPRM proposed to revise one of several current compliance alternatives, to decrease the number of years needed to qualify for the alternative and to permit qualification on a provisional basis. The NPRM also proposed to add another compliance alternative, designed for compliant Title VI-assisted facilities that are in chronic deficit in meeting their uncompensated services obligations.

I. Background

The Hill-Burton uncompensated services regulations date, in their present form, back to 1979, when regulations containing the basic components of the present regulations were promulgated. 44 FR 29372 (May 18, 1979). The 1979 regulations for the first time established a purely quantitative measure of the statutory ''reasonable volume of services''; this quantitative measure was a total obligation measured in dollars, broken down into annual compliance levels. They also provided that a facility that failed to provide in a given year uncompensated services in an amount sufficient to meet its annual compliance level would have a ''deficit,'' which it would have to make up in subsequent years. If not made up, the deficit (along with any additional deficits in later years) would accumulate, and be adjusted by any increases in the medical Consumer Price Index (CPI). *See,* § 124.503(b)(3).

In the years since 1979, the regulations have been amended several times—in 1986, 1987, 1994, and 1995. Aside from the amendment of the basic regulatory structure effected by the 1987 amendment, the rest of the amendments were directed at creating various alternative methods by which facilities could comply with their obligation to provide a reasonable volume of uncompensated services to persons unable to pay. These various ''compliance alternatives'' appear at §§ 124.513—124.516 of subpart F. Although each of the compliance alternatives is addressed to different types of facilities, all of the facilities that qualify for the compliance alternatives share the same basic characteristics: They provide significant amounts of free or below cost care to persons unable to pay for that care, but, for various reasons, are unable to receive sufficient credit for the care they provide to meet their Hill-Burton uncompensated services obligations under the compliance standards codified at 42 CFR 124.501—124.512. As a consequence, prior to the adoption of the compliance alternatives set out at §§ 124.513—124.516, these types of facilities were generally running uncompensated services deficits, despite providing substantial services on a free or below-cost basis to poor individuals. The compliance alternatives were adopted to address this anomaly.

Over the years since 1979, the number of facilities with an outstanding Hill-Burton uncompensated services obligation has shrunk from approximately 5,000 in 1979 to approximately 650 as of December 31, 2000. Thus, approximately 4,350 Hill-Burton assisted facilities have fulfilled their obligation, provided as a condition of the federal assistance received, to provide a ''reasonable volume of uncompensated services to persons unable to pay therefor.'' However, a number of the remaining Hill-Burton obligated facilities operate compliant, fully 3 expanded uncompensated services programs but fail to receive sufficient uncompensated services requests to satisfy their annual dollar obligation. (''Fully expanded'' means that the facilities make available on request, all of their services at no charge to persons unable to pay up to the limit of double the poverty guidelines, Category B eligibility (for facilities other than nursing homes), or triple the poverty guidelines, Category C eligibility (for nursing homes).) Thus, they run Hill-Burton deficits on a chronic basis, and those deficits are adjusted upwards by the percentage change in the medical CPI, pursuant to § 124.503(b)(3). The Department believes that many of these facilities may never be able to make up their deficits under the present requirements.

A few statistics indicate the dimensions of the problem. As of the end of 1998, of the 424 Hill-Burton facilities in deficit, 226 had operated a fully expanded, compliant program for at least a year. Of these 226 facilities, 117 (52 percent, or 28 percent of the total number of facilities in deficit) had operated a fully expanded program for the last three years, and, despite providing over $73 million in uncompensated services in that period, saw their collective deficit increase from $178,724,130 to $180,748,408—an increase of one percent—in the same period. Of these 226 facilities, 64 facilities (28 percent, or 15 percent of the total in deficit) operated fully expanded programs for the last two years, and, despite providing over $36 million in uncompensated services in that period, saw their collective deficit decrease only $10.8 million, or 13 percent for that period, while in 33 of the 64 facilities, the deficits increased. Of the 226 facilities, 45 facilities (20 percent, or 11 percent of the total in deficit) operated fully expanded programs in the last year and, despite providing over $9.8 million in uncompensated services in that period, saw their collective deficit increase from

$57,374,195 to $61,739,838—an increase 4 of 7.6 percent—in that period. It is projected that, because of the increasing deficits a number of these facilities are experiencing, 81 facilities will have at least another 20 years under obligation, and 53 of these 81 will have obligations extending for at least 100 years.

II. Proposed Rules

The proposed rules shared the objective of the prior compliance alternatives. Like those compliance alternatives, the proposed rules had the goal of enabling facilities, which, by the nature of their operations have great difficulty or find it impossible to meet the dollar volume requirements of the general regulations but nonetheless provide significant uncompensated services to persons unable to pay, to comply with and complete their uncompensated services obligations. A corollary goal of this objective is the reduction or elimination of the uncompensated services deficits of such facilities.

In the case of the amendment to § 124.516, the so-called ''charitable facility'' compliance alternative, the proposed rule permitted a provisional certification, to make it easier for facilities to qualify for the alternative. Facilities could be provisionally certified, with credit toward their obligation earned during the period of provisional certification if they met the conditions of the provisional certification and with no credit earned if they failed to meet the conditions of the provisional certification. The proposed amendment to § 124.516 thus enabled facilities whose operations in fact qualify them for the charitable facility alternative to start earning credit under that alternative at the earliest possible date, instead of requiring a three-year track record, which was required under the alternative.

In the case of the new compliance alternative set out at § 124.517, the proposed rule provided a means by which facilities in deficit, which remain in deficit despite running procedurally compliant and fully expanded uncompensated services programs, could eliminate their deficits and complete their obligations in a reasonable time frame. The compliance alternative proposed at § 124.517 was to be available to facilities that did not restrict the availability of uncompensated services to their patient population in any way—*i.e.,* they did not restrict the type of services of the facility available on an uncompensated basis, and they did not restrict eligibility for those uncompensated services (for example, by limiting uncompensated services to Category A individuals only, or by charging Category B or, for nursing homes, Category C individuals). In addition, those facilities must comply with the procedural requirements of the standard regulations with respect to notice, eligibility determinations, recordkeeping requirements, and so on. Also, these facilities must provide broad notice of their program to provide services to the poor by:

1. Posting Federally supplied Hill-Burton signs, in prescribed locations, that describe the facilities' obligation to provide uncompensated services to the poor and specify where to file complaints;

2. Publishing notice of their Federal obligation in local newspapers, describing their allocation plan which includes all of their services to eligible persons requesting uncompensated services with incomes up to triple the poverty guidelines for nursing homes and up to twice the poverty guidelines for all other facilities;

3. Distributing, to each person coming to the facilities for services, specific written notification of the Hill-Burton obligation, including the allocation plan, income eligibility criteria, timeframes for facilities to make determinations of patients' Hill-Burton eligibility, and where to make application for Hill-Burton assistance.

Thus, it was clear that Hill-Burton facilities qualifying for the proposed alternative were unique from other facilities located in their areas. Although the non-Hill-Burton facilities may provide charity care, their programs tend not to be publically visible and often are mere writeoffs to charity after they have exhausted efforts to collect payments from the patients.

Where a facility fails to meet its annual compliance level despite the existence of an unrestricted program, the Secretary believes that there is clear evidence that there is insufficient demand for the uncompensated services offered and that the facility should not have to incur a deficit due to a failure of demand. The proposed compliance alternative addressed this issue. In addition, we believe that the compliance alternative will provide a mechanism that will facilitate the goal of making up large deficits. The sheer size of a number of deficits leads to a level of discouragement that can affect a facility's performance. Where this has happened, the existence of the deficit has the perverse effect of harming, rather than helping, the pool of eligible individuals such facilities serve. The compliance alternative should encourage facilities with chronic deficits to reopen their uncompensated services programs and complete their obligations. This expansion would result in more uncompensated services provided to persons unable to pay. For example, based on the most recent data available at the time the NPRM was developed, hospitals which began operating fully expanded programs in fiscal year 1997 provided an average of 22 percent more uncompensated services than in the previous year under a limited program. Despite the increase in services, their average Hill-Burton deficit increased by 6 percent due to the effect of the CPI adjustment applied to large deficits. Nursing homes which began operating fully expanded programs in fiscal year 1997 provided an average of 39 percent more uncompensated services than in the previous year. Despite the increase in services, their average Hill-Burton deficit increased by 16 percent, also because of the CPI adjustment.

Thus, it was thought that the proposed rule would likely result in more facilities operating fully expanded programs, and also that more uncompensated services would be provided during their periods of obligation. The immediate value to the community of the increase in the uncompensated care services provided to eligible individuals under a fully expanded program is greater than the value of deferred services provided at some indeterminable, unspecified future date. Moreover, the new alternative implements best the intent of the 1979 regulation which set a fixed period of 20 years to fulfill a facility's obligations. This rule gives facilities which operate fully expanded programs the option of obtaining a fixed period of obligation.

As of the time of writing the proposed rules, approximately 188 hospitals nationwide could qualify for the proposed alternative once they begin to implement compliant and fully expanded uncompensated services programs. Significant is the fact that only four States have more than eight potentially qualifying facilities: New York, 32; Pennsylvania, 22; Wisconsin, 13; and Michigan, 12. Within the State of New York, 21 of the 32 facilities are the sole hospital care provider within their municipality. In Pennsylvania, this is true for 13 of the 27 facilities; in Wisconsin, 12 of the 13 facilities; and in Michigan, 10 of the 12 facilities. This means that these facilities are not meeting their uncompensated services obligations because there are not enough Hill-Burton eligible people in their communities. They are not shifting the burden of caring for the poor to other facilities since in most cases the Hill-

Burton obligated facilities are the only community providers. Further, where Hill-Burton obligated facilities are located with other providers in urban communities with large, low-income populations, in general, they have not met their obligations because: (1) Their Hill-Burton assistance was large resulting in very high annual compliance levels; (2) they sometimes implemented restricted programs; and (3) they sometimes failed to obtain eligibility documentation for uncompensated services provided to low-income persons. Most of these urban facilities would have to operate an additional 10 or more years under the alternative.

The alternative could impact as many as 121 nursing homes nationwide once they all begin to implement compliant and fully expanded uncompensated services programs. Significant is the fact that only two States, Michigan with 20 facilities and Ohio, with 15 facilities, have more than seven qualifying nursing homes. Thirty States have three or fewer facilities, with 15 of the States having no facilities. Further, the typical nursing home has 75–90 percent of its patients covered by Medicaid and Medicare, leaving few and sometimes no Hill-Burton eligible patients for credit against their obligations.

For these reasons, we conclude that where a Hill-Burton facility has a record of operating a visible, compliant, and fully expanded uncompensated services program, its uncompensated services deficit is due to a lack of community need.

In addition to the foregoing, various technical and conforming changes to the existing Subpart F were proposed. The NPRM also solicited comments on the proposed changes.

III. Public Comment and the Department's Responses

The Department received nine comments on the proposed rule. Thirty-five health care facilities are represented by the comments. Two commenters commended the proposed rules, expressing the opinion that the new compliance alternative will allow facilities currently in deficit to complete their Hill-Burton uncompensated services obligation in a realistic way. Two commenters expressed the opinion that the Hill-Burton program is archaic and should be terminated immediately. The remaining five commenters raised specific issues regarding the details of the proposed rules. Their comments and the Department's responses thereto are summarized below.

1. Criteria for Certification

Public Comment

A number of commenters questioned the requirement that, in order to qualify for full credit for past years under the new alternative, § 124.517, a facility must have been operating a fully expanded program. They felt that this requirement was unfair because the Department had never required expansion to a fully expanded program in order to be in compliance with the regulations.

Department's Response

Actually, the current regulation required facilities with deficits to take specific affirmative steps each year to make up deficits from previous years. See 42 CFR 124.503(b)(4). Thus, expansion from a limited allocation plan (limited services and/or limited financial criteria) up to and including a fully expanded plan was an option clearly available to all facilities throughout the program's history. The clear purpose of the affirmative action plan requirement was to increase the pool of eligible persons and medical services each facility offered in order for it to meet its obligation.

In some instances, facilities took no or only modest affirmative steps to address deficits. In others, they expanded their allocation plans to include the full range of services offered in the facility and considered income eligibility based on maximum financial criteria allowed under the regulation. Many of these facilities successfully completed their total obligation as a result of the expansion. Others did not, despite having implemented the broadest possible plan. The intent of the new rule is to recognize those facilities whose deficits continue in spite of having willingly implemented the broadest possible compliant program under the applicable rules. Thus, any deficit remaining clearly demonstrates a lack of community need and the facilities would be eligible for a year's credit for each year that they ran a fully expanded program.

Although those facilities with annual deficits which operated compliant but limited programs are ineligible to receive a year's credit, they do receive credit based on any actual uncompensated care provided. In addition, by expanding their allocation plans under the terms of the proposed rule now, they can establish a finite time for completion of the obligation, which, based on past performance, was not determinable.

Additionally, the Department has determined that for the first year that facilities were subject to the 1979 regulations (1980 for most facilities), any facility which operated a compliant Hill-Burton program will receive a year's credit under the new regulation, because only after completion of the first year was it possible to determine a facility's status in regard to excess/deficit. If a facility was in deficit status, then it became subject to the affirmative action plan requirement, which served as the catalyst for the facility to expand its Hill-Burton program.

According to the NPRM, a facility could receive a year's credit only where there was a fully expanded program for the entire fiscal year. Because many facilities expanded to a full program in the middle of their fiscal year, the Department has determined that a facility will receive a percentage of a year's credit for the first year in which it fully expanded its Hill-Burton program, depending on the effective date of the fully expanded program, as long as it continued its fully expanded program in the subsequent years.

2. Formula Pertaining to the New Compliance Alternative

Public Comment

A number of commenters felt that the formula set forth in the Preamble was confusing, complex, and precluded the facilities from computing the dollars-to-years conversion.

Department's Response

The Department acknowledges that the formula may appear complex and that some facilities will require assistance to do the calculation. Therefore, the Department will provide each Title VI facility that is in deficit a preliminary calculation regarding the conversion of deficit dollars to years of obligation.

Some of the comments suggested a misapprehension about the intent of the formula. The idea behind the new compliance alternative, known as the unrestricted availability compliance alternative for Title VI-assisted facilities (§ 124.517), is to convert the Hill-Burton deficit of a facility operating a fully expanded Hill-Burton program from an amount of money to a number of years of obligation. The effect of this change is to establish an end-date for the Hill-Burton obligation to provide uncompensated services.

In order to make this conversion, the Department will first compute the number of years of obligation. The date required to do this differs from facility to facility, based on a 20-year period that began with the opening of a Hill-Burton-assisted facility. For example, a

facility which as of the start of its fiscal year 1980 had 7 years remaining in its 20-year obligation period, would have a total obligation period equal to 7.0 years.

Next, the Department will subtract one year from that total for each year that the facility implemented a fully expanded Hill-Burton program. If the facility implemented a fully expanded program for 4 years, it would have a balance of 3 years of obligation remaining. Next, the Department will compute partial years' credit, through use of a formula, for years that the facility earned credit but did not have a fully expanded program. The facility will receive credit expressed in time proportionate to its total outstanding obligation, after allowing credit for whole years credited in the previous step. If the above facility was determined to have a maximum remaining deficit equal to $500,000 and was credited with providing $100,000 during non-fully expanded years, it would receive additional credit expressed in time equal to 20 percent of 3 years, or 7.2 months.

Once these computations have been made, each facility under the new compliance alternative will have a specified number of years remaining to provide Hill-Burton uncompensated services. As long as the facility continues to operate a fully expanded program, the years of obligation will decline until the end-date established by the computations described above.

One commenter expressed the opinion that the Department is considering the use of a formula different from the one that appeared in the NPRM. The Department is not considering any change to the formula originally published in the NPRM except as noted above.

3. Requirements of a Fully Expanded, Compliant Program

Public Comment

One commenter felt that, for future reference, the requirements of a compliant, fully expanded program should be a part of the regulations.

Department's Response

The requirements of a compliant, fully expanded program have been restated in the Preamble and are also included in the final rule at § 124.517(b).

In view of the fact that the rules below relieve restrictions on facilities that apply and are certified for either the provisional component of the charitable facility compliance alternative or the new unrestricted availability compliance alternative for Title VI-assisted facilities, and impose no additional duties or obligations on other facilities, delay in the effective date of these rules is not required under 5 U.S.C. 553. For the same reasons, the Secretary hereby finds that good cause exists for not delaying the effective date of the rules below. The rules are accordingly effective upon publication.

IV. Summary of Supporting Analyses

Executive Order 12866

Executive Order 12866 requires that all regulations reflect consideration of alternatives, costs, benefits, incentives, equity, and available information. Regulations must meet certain standards, such as avoiding unnecessary burden. Regulations which are ''significant'' because of cost, adverse effects on the economy, inconsistency with other agency actions, budgetary impact, or novel legal or policy issues require special analysis. The Department has determined that this rule will not have an annual effect on the economy of $100 million or more, and does not otherwise meet the definition of a ''significant'' rule under Executive Order 12866.

The Regulatory Flexibility Act

The Regulatory Flexibility Act requires that agencies analyze regulatory changes to determine whether they create a significant impact on a substantial number of small entities. As the total universe of facilities with outstanding Hill-Burton obligations is small (approximately 650 facilities) and a little over half of these are presently either without deficit or have elected to comply with their uncompensated services obligations through other compliance options, it is not anticipated that the final rule will affect a substantial number of small entities, within the meaning of the Act. Moreover, the impact of the rules should be positive, as they would lessen the burden of compliance on those facilities that would elect to utilize either of the compliance options. Accordingly, the Secretary certifies that the rules below would not create a significant impact on a substantial number of small entities.

Paperwork Reduction Act

The unrestricted availability compliance alternative for Title VI facilities does not contain any information collection requirements subject to OMB review under the Paperwork Reduction Act of 1995. The amendment to the charitable facility compliance alternative rule contains information collections which are subject to review by the Office of Management and Budget (OMB) under the Paperwork Reduction Act of 1995. The underlying purpose of this rule is to decrease recordkeeping, reporting, and notification burden for the charitable facilities not already certified under the alternative. New estimates for the reduction of burden have been determined. They were submitted and cleared by OMB. Facilities receiving prospective certification under the charitable facility compliance alternative will no longer be required to maintain extensive records on uncompensated services (§ 124.510(a)), but instead will have to maintain only records which document its eligibility for the compliance alternative (§ 124.510(b)). These documents are ordinarily retained by the facilities so the recordkeeping requirement imposes no additional burden. This change is expected to reduce the recordkeeping burden by 50 hours per facility per year.

Similarly, reporting burden will be reduced. Charitable facilities will be required to apply once for the certification (§ 124.516(d)), and thereafter will need only to certify their continued eligibility annually (§ 124.509(b)). Currently, facilities in deficit status under the general rule must file a report each year which documents the amount of uncompensated care provided (§ 124.509(a)). Facilities certified under the alternative will have their reporting burden reduced by 5 hours per facility in the first year, and by 10.5 hours per facility in subsequent years.

Finally, notification/disclosure burden will be eliminated, because the facilities will no longer be required to: (1) Publish a notice each year of the availability of uncompensated services (§ 124.504(a)); (2) provide individual written notices to each person seeking service in the facility (§ 124.504(c)); or (3) provide a determination of eligibility to each person applying for uncompensated service (§ 124.507). These changes are expected to reduce the notification burden by 45 hours per facility per year.

All sections of the regulations that contain reporting, recordkeeping, or notification/disclosure requirements previously have been approved by OMB under the Paperwork Reduction Act (OMB #0915–0077). The NPRM invited the public to provide comments on this information collection requirement so that the Department of Health and Human Services could:

(1) Evaluate whether the proposed collections of information are necessary for the proper performance of the

functions of the agency, including whether the information will have practical utility;

(2) Evaluate the accuracy of the agency's estimates of the burdens of the collections of information, including the validity of the methodology and assumptions used;

(3) Enhance the quality, utility and clarity of the information to be collected; and

(4) Minimize the burden of the collections of information on those who are to respond, including through the use of appropriate automated, electronic, mechanical, or other technological collection techniques or other forms of information technology, *e.g.,* permitting electronic submission of responses.

Included in the estimate is the time for reviewing instructions, searching existing data sources, gathering and maintaining the data needed, and completing and reviewing the collection of information.

We received no public comments on the estimated public reporting burden.

Unfunded Mandates Reform Act

The final rule contains no Federal mandates for State, local, or tribal governments or the private sector.

Executive Order 13132

The final rule has no impact on federalism as set forth in Executive Order 13132, which became effective on November 8, 1999, replacing Executive Order 12612.

Environmental Impact Statement

The final rule has no impact on the quality of the human environment and, therefore, an Environmental Impact Statement is not required.

List of Subjects in 42 CFR Part 124

Grant programs—health, Health care, Health facilities, Loan programs—health, Low income persons.

Dated: April 12, 2001.

Elizabeth M. Duke,

Acting Administrator, Health Resources and Services Administration.

Approved: June 13, 2001.

Tommy G. Thompson,

Secretary.

For the reasons set out in the preamble, part 124, subpart F, of title 42 of the Code of Federal Regulations is amended to read as follows:

PART 124—MEDICAL FACILITY CONSTRUCTION AND MODERNIZATION

1. Revise the authority citation for part 124 to read as follows:

Authority: 42 U.S.C. 216, 300r, 300s, unless otherwise noted.

Subpart F—Reasonable Volume of Uncompensated Services to Persons Unable To Pay

2. Revise the first sentence of § 124.503(c)(1) to read as follows:

§ 124.503 Compliance level.

* * * * *

(c) * * * (1) Except for facilities certified under § 124.513, § 124.514, § 124.515, § 124.516, or § 124.517, if a facility provides in a fiscal year uncompensated services in an amount exceeding its annual compliance level, it may apply the amount of excess to reduce its annual compliance level in any subsequent fiscal year. * * *

* * * * *

3. Revise the heading and introductory text of paragraph (a) of § 124.508 to read as follows:

§ 124.508 Cessation of uncompensated services.

(a) *Facilities not certified under § 124.513, § 124.514, § 124.515, § 124.516, or § 124.517.* Where a facility, other than a facility certified under § 124.513, § 124.514, § 124.515, § 124.516, or § 124.517, has maintained the records required by § 124.510(a) and determines based thereon that it has met its annual compliance level for the fiscal year or the appropriate level for the period specified in its allocation plan, it may, for the remainder of that year or period:

* * * * *

4. Revise the heading of paragraph (a) and add paragraph (e) to § 124.509 to read as follows:

§ 124.509 Reporting requirements.

(a) *Facilities not certified under § 124.513, § 124.514, § 124.515, § 124.516, or § 124.517.* * * *

* * * * *

(e) *Facilities certified under § 124.517.* If a facility certified under § 124.517 ceases to provide uncompensated services consistent with its certification under that section because of financial inability, it shall report such cessation to the Secretary within 90 days of the cessation and provide any documentation or information relating to the provision or cessation of uncompensated services that the Secretary may require.

5. Revise the heading of paragraph (a) and the heading and the first sentence of paragraph (b) of § 124.510 to read as follows:

§ 124.510 Record maintenance requirements.

(a) *Facilities not certified under § 124.513, § 124.514, § 124.515, § 124.516, or § 124.517.* * * *

* * * * *

(b) *Facilities certified under § 124.513, § 124.514, § 124.516, or § 124.517.* A facility certified under § 124.513, § 124.514, § 124.516, or § 124.517 shall retain, make available for public inspection consistent with personal privacy, and provide to the Secretary on request any records necessary to document compliance with the applicable requirements of this subpart in any fiscal year, including those documents provided to the Secretary under § 124.513(c), § 124.514(c), § 124.516(c), or § 124.517(b), as applicable. * * *

* * * * *

6. Revise the first sentence of paragraph (a)(3) and paragraph (b)(1)(iii)(C) of § 124.511 to read as follows:

§ 124.511 Investigation and determination of compliance.

(a) * * *

(3) When the Secretary investigates a facility, the facility, including a facility certified under § 124.513, § 124.514, § 124.515, § 124.516, or § 124.517, shall provide to the Secretary on request any documents, records and other information concerning its operation that relate to the requirements of this subpart. * * *

* * * * *

(b) * * *

(1) * * *

(iii) * * *

(C) The facility had procedures in place that complied with the requirements of § 124.504(c), § 124.505, § 124.507, § 124.509, 125.510, § 124.513(b)(2), § 124.514(b)(2), § 124.515, § 124.516(b)(1) or (b)(2), as applicable, or § 124.517(b), and systematically and correctly followed such procedures.

* * * * *

7. Revise the introductory text of paragraph (b) and paragraph (c)(1) of § 124.512 to read as follows:

§ 124.512 Enforcement.

* * * * *

(b) A facility, including a facility certified under § 124.513, § 124.514, § 124.516, or § 124.517, that has denied uncompensated services to any person because it failed to comply with the requirements of this subpart will not be in compliance with its assurance until it takes whatever steps are necessary to

remedy fully the noncompliance, including:

* * * * *

(c) * * *

(1) Have a system for providing notice to eligible persons as required by § 124.504(c), § 124.513(b)(2), § 124.514(b)(2), § 124.516 (b)(2)(ii)(A), or § 124.517(b)(2), as applicable;

* * * * *

8. Revise § 124.516 to read as follows:

§ 124.516 Charitable facility compliance alternative.

(a) *Effect of certification.* The Secretary may certify as a ''charitable facility'' a facility which meets the applicable requirements of this section. A facility which is certified or provisionally certified as a charitable facility is not required to comply with this subpart except as provided in this section.

(b) *Methods of qualification for certification or provisional certification.* (1) A facility may qualify for certification under this section if it meets the criteria of paragraph (c)(1) or paragraph (c)(2) of this section.

(2) A facility may qualify for a provisional certification under this section if it provides an assurance that meets the requirements of paragraph (d)(2) of this section.

(c) *Criteria for certification under paragraph (b)(1) of this section.* A facility may qualify for certification under paragraph (b)(1) of this section if it met the criteria of either paragraph (c)(1) or paragraph (c)(2) of this section for the fiscal year preceding the request for certification. A facility that seeks certification under paragraph (c)(2) of this section must also meet the requirements of paragraph (c)(2)(i) or paragraph (c)(2)(ii) of this section during each year of certification.

(1)(i) *For facilities that are nursing homes:* It received no monies directly from patients with incomes up to triple the current poverty line issued by the Secretary pursuant to 42 U.S.C. 9902, exclusive of amounts charged or received for purposes of claiming reimbursement under third party insurance or governmental programs, such as Medicaid or Medicare deductible or co-insurance amounts.

(ii) *For all other facilities.* It received no monies directly from patients with incomes up to double the current poverty line issued by the Secretary pursuant to 42 U.S.C. 9902, exclusive of amounts charged or received for purposes of claiming reimbursement under third party insurance or governmental programs, such as Medicaid or Medicare deductible or coinsurance amounts.

(2) It received at least 10 percent of its total operating revenue (net patient revenue plus other operating revenue, exclusive of any amounts received, or if not received, claimed, as reimbursement under Medicaid or Medicare) from philanthropic sources to cover operating deficits attributable to the provision of discounted services. Philanthropic sources include private trusts, foundations, churches, charitable organizations, state and/or local funding, and individual donors; and either—

(i) Provides health services without charge or at a substantially reduced rate (exclusive of amounts charged or received for purposes of claiming reimbursement under third party insurance or governmental programs, such as Medicaid or Medicare deductible or coinsurance amounts) to persons who are determined by the facility to qualify for such reduced charges under a program of discounted health services. A ''program of discounted health services'' must provide for financial and other objective eligibility criteria and procedures, including notice prior to nonemergency service, that assure effective opportunity for all persons to apply for and obtain a determination of eligibility for such services, including a determination prior to service where requested; or

(ii) Makes all services of the facility available to all persons at no more than a nominal charge, exclusive of amounts charged or received for purposes of claiming reimbursement under third party insurance or governmental programs, such as Medicaid or Medicare deductible or coinsurance amounts.

(d) *Procedures for certification*—(1) *Certification under paragraph (b)(1) of this section.* To be certified under paragraph (b)(1) of this section, a facility must submit to the Secretary, in addition to other materials that the Secretary may from time to time require, copies of the following:

(i) An audited financial statement for the fiscal year preceding the request or other documents prescribed by the Secretary, sufficient to show that the facility meets the criteria of paragraph (c)(1) or (c)(2) of this section, as applicable;

(ii) Where a facility claims qualification under paragraph (c)(2)(i) of this section, a complete description, and documentation where requested, of its program of discounted health services, including charging and collection policies of the facility, and eligibility criteria and notice and determination procedures used under its program(s) of discounted health services;

(iii) Where the facility claims qualification under paragraph (c)(1) or paragraph (c)(2)(ii) of this section, a complete description, and documentation where requested, of its admission, charging, and collection policies.

(2) *Provisional certification under paragraph (b)(2) of this section.* (i) In order to receive a provisional certification under paragraph (b)(2) of this section, prior to the beginning of the fiscal year for which provisional certification will be sought, the facility must submit to the Secretary an assurance, together with such documentation and in such form and manner as the Secretary may require, that it will operate during the fiscal year a program that qualifies for certification under paragraph (b)(1) of this section.

(ii) No later than 90 days following the end of the fiscal year in which a facility has operated a provisionally certified program, the facility must submit to the Secretary, the documentation required, as applicable, under paragraph (d)(1) of this section.

(e) *Period of effectiveness*—(1) *Certification under paragraph (b)(1) of this section.* A certification by the Secretary under paragraph (b)(1) of this section remains in effect until withdrawn. The Secretary may disallow credit under this subpart when the Secretary determines that there has been a material change in any factor upon which certification was based or substantial noncompliance with this section. The Secretary may withdraw certification where the change or noncompliance has not been, in the Secretary's judgment, adequately remedied or otherwise continues.

(2) *Provisional certification under paragraph (b)(2) of this section.* Where the Secretary is satisfied, based on the documentation submitted by the facility in accordance with paragraph (d)(2)(ii) of this section and any other information available to the Secretary, that the facility has complied with the terms of its provisional certification under paragraph (b)(2) of this section, the Secretary shall certify the facility under paragraph (b)(1) of this section. If the Secretary finds that the facility has not complied with the terms of its provisional certification under paragraph (b)(2) of this section, the facility will receive no credit towards its uncompensated services obligation during the fiscal year of provisional certification.

(f) *Deficits*—(1) *Title VI-assisted facilities*—(i) *Title VI-assisted facilities with assessed deficits.* Where a facility assisted under title VI of the Act has been assessed as having a deficit under

§ 124.503(b) that has not been made up prior to certification under paragraph (b)(1) of this section, the facility may make up that deficit by either—

(A) Demonstrating to the Secretary's satisfaction that it met the applicable requirements of paragraph (c) of this section for each year in which a deficit was assessed; or

(B) Providing an additional period of service under this section on the basis of one year (or portion of a year) of certification for each year (or portion of a year) of deficit assessed. The period of obligation applicable to the facility under § 124.501(b) shall be extended until the deficit is made up in accordance with the preceding sentence.

(ii) *Title VI-assisted facilities with unassessed deficits.* Where any period of compliance under this subpart of a facility assisted under title VI of the Act has not been assessed, the facility will be presumed to have no allowable credit for the unassessed period. The facility may either—

(A) Make up such deficit in accordance with paragraph (f)(1)(i) of this section; or

(B) Submit an independent certified audit, conducted in accordance with procedures specified by the Secretary, of the facility's records maintained pursuant to § 124.510. If the audit establishes to the Secretary's satisfaction that no, or a lesser, deficit exists for the period in question, the facility will receive credit for the period so justified. Any deficit which the Secretary determines still remains must be made up in accordance with paragraph (f)(1)(i)(B) of this section.

(2) *Title XVI-assisted facilities*—(i) *Title XVI-assisted facilities with assessed deficits.* A facility assisted under title XVI of the Act which has an assessed deficit which was not made up prior to certification under paragraph (b)(1) of this section shall make up that deficit in accordance with paragraph (f)(1)(i) of this section. If it cannot make the showing required by that paragraph, it shall make up the deficit when its certification under paragraph (b)(1) of this section is withdrawn.

(ii) *Title XVI-assisted facilities with unassessed deficits.* Where any period of compliance under this subpart of a facility assisted under title XVI of the Act has not been assessed, the facility will be presumed to have no allowable credit for the unassessed period. The facility may either—

(A) Make up such deficit in accordance with paragraph (f)(1)(i) of this section; or

(B) Submit an independent certified audit, conducted in accordance with procedures specified by the Secretary, of the facility's records maintained pursuant to § 124.510. If the audit establishes to the Secretary's satisfaction that no, or a lesser, deficit exists for the period in question, the facility will receive credit for the period so justified. Any deficit which the Secretary determines still remains must be made up in accordance with paragraph (f)(2)(i) of this section.

§ 124.517 [Redesignated as § 124.518]

9. Redesignate § 124.517 as § 124.518 of subpart F.

10. Add a new § 124.517 to read as follows:

§ 124.517 Unrestricted availability compliance alternative for Title VI-assisted facilities.

(a) *Effect of certification.* The Secretary may certify a Title VI-assisted facility which meets the requirements of paragraph (b) of this section and the applicable requirements of this subpart as an unrestricted availability facility. A facility which is so certified is not required to comply with the requirements of this subpart, except as provided in this section or elsewhere in this subpart.

(b) *Criteria for qualification.* A facility may qualify for certification under this section if, for any fiscal year for which certification is sought, it operates a compliant, fully expanded uncompensated services program. Such a program must meet the following criteria:

(1) It makes all services of the facility available without charge to all persons requesting uncompensated services from the facility who are eligible under § 124.505, including all persons coming within Category B and, if applicable, Category C.

(2) It complies with the notice and allocation plan requirements of §§ 124.504 and 124.506, except that all notices published or provided must describe an allocation plan and program consistent with paragraph (b)(1) of this section.

(3) It makes written determinations in accordance with § 124.507, except that all favorable determinations must indicate that the facility will provide uncompensated services at no charge.

(4) It provides uncompensated services consistent with the requirements of this section for the entire fiscal year for which certification is sought, except that a facility may

(i) Cease providing such services and still receive credit, calculated in accordance with paragraph (d) of this section, where—

(A) The facility has completed its total uncompensated services obligation, including making up any deficit; or

(B) The facility determines, and submits documentation which the Secretary finds, taking into account the factors identified in § 124.511(c), sufficient to establish that it is financially unable to continue to meet the requirements of this section for the remainder of the fiscal year; and

(ii) Receive a portion of a year's credit for the first partial year in which it began operating a fully expanded program, as long as it continued to operate the fully expanded program in subsequent years.

(c) *Period of effectiveness.* A certification by the Secretary under this section remains in effect until withdrawn. The Secretary may withdraw certification under this section where the Secretary determines the facility is in substantial noncompliance with the requirements of paragraph (b) of this section and has not adequately remedied or otherwise continues such noncompliance. Where the Secretary withdraws certification for part or all of a fiscal year or years, no credit may be granted for the period of unremedied substantial noncompliance.

(d) *Deficits.* (1) Where a Title VI-assisted facility has been assessed as having a deficit under § 124.503(b) that has not been made up prior to certification under this section, the facility may make up the deficit by providing uncompensated services in accordance with this section. The facility shall receive credit towards its deficit on the basis of one year, or part thereof, of credit towards each ''deficit year'' for each year, or part thereof, of operation in compliance with this section and the applicable requirements of this subpart.

(2) The number of ''deficit years'' of a facility shall be calculated as follows:

(i) Determine the number of years in the facility's total period of obligation pursuant to § 124.501;

(ii) Subtract the number of years in which the facility operated in compliance with this section and the applicable requirements of this subpart from the number of years derived under paragraph (d)(2)(i) of this section;

(iii) For all years in which the facility did not operate in compliance with this section, determine the ratio of the total compliance levels applicable under § 124.503(a) to the facility's total deficit under § 124.503(b);

(iv) Multiply the percentage derived under paragraph (d)(2)(iii) of this section by the number of years under obligation pursuant to § 124.501 but for

which the facility did not operate in compliance with this section;

(v) Subtract the number derived under paragraph (d)(2)(iv) of this section from the number of years derived under paragraph (d)(2)(ii) of this section;

(vi) If the facility is still within the period described in § 124.501(b)(1), add the number of years derived under paragraph (d)(2)(v) of this section to the end of the period of obligation, or if the facility is beyond the period described in § 124.501(b)(1), add the number of years derived under paragraph (d)(2)(v) of this section to the last year the facility operated in compliance with this section.

[FR Doc. 01–24043 Filed 9–25–01; 8:45 am]

BILLING CODE 4160–15–P

Reader Aids

Federal Register

Vol. 66, No. 187

Wednesday, September 26, 2001

CUSTOMER SERVICE AND INFORMATION

Federal Register/Code of Federal Regulations

General Information, indexes and other finding aids	**202–523–5227**
Laws	**523–5227**
Presidential Documents	
Executive orders and proclamations	**523–5227**
The United States Government Manual	**523–5227**
Other Services	
Electronic and on-line services (voice)	**523–4534**
Privacy Act Compilation	**523–3187**
Public Laws Update Service (numbers, dates, etc.)	**523–6641**
TTY for the deaf-and-hard-of-hearing	**523–5229**

ELECTRONIC RESEARCH

World Wide Web

Full text of the daily Federal Register, CFR and other publications:

http://www.access.gpo.gov/nara

Federal Register information and research tools, including Public Inspection List, indexes, and links to GPO Access:

http://www.nara.gov/fedreg

E-mail

PENS (Public Law Electronic Notification Service) is an E-mail service for notification of recently enacted Public Laws. To subscribe, send E-mail to

listserv@listserv.gsa.gov

with the text message:

subscribe PUBLAWS-L your name

Use listserv@www.gsa.gov only to subscribe or unsubscribe to PENS. We cannot respond to specific inquiries.

Reference questions. Send questions and comments about the Federal Register system to:

info@fedreg.nara.gov

The Federal Register staff cannot interpret specific documents or regulations.

FEDERAL REGISTER PAGES AND DATE, SEPTEMBER

46211–46364 4
46365–46508 5
46509–46692 6
46693–46936 7
46937–47060 10
47061–47378 11
47379–47570 12
47571–47876 13
47877–47948 14
47949–48084 17
48085–48202 18
48203–48322 19
48323–48526 20
48527–48784 21
48785–48948 24
48949–49084 25
49085–49270 26

CFR PARTS AFFECTED DURING SEPTEMBER

At the end of each month, the Office of the Federal Register publishes separately a List of CFR Sections Affected (LSA), which lists parts and sections affected by documents published since the revision date of each title.

3 CFR

Proclamations:
7459 46507
7460 47569
7461 47939
7461 (Amended by 7464) 48203
7462 47947
7463 (See E.O. 13224) 48199, 49079
7464 48203
7465 48317
7466 48319
7467 48321
7468 48947
7469 48949

Executive Orders:
12865 (Continued by Notice of September 24, 2001) 49084
13069 (See Notice of September 24, 2001) 49084
13098 (See Notice of September 24, 2001) 49084
13223 48202
13224 49079

Administrative Orders:
Notices:
September 24, 2001 49084
Presidential Determinations:
No. 2000–29 of September 12, 2000 (See Presidential Determination No. 2001–26 of September 12, 2001) 47943
No. 2001–24 of August 18, 2001 46693
No. 2001–25 of August 18, 2001 46695
No. 2001–26 of September 12, 2001 47943
No. 2001–29 of September 23, 2001 49075

5 CFR

550 49085
890 49086

Proposed Rules:
213 46968
2608 48824

7 CFR

51 48785
245 48323
301 .....46365, 46509, 46692
354 46211
400 47949
770 47877
905 49088
928 48527
948 48951
966 48529

Proposed Rules:
735 46310
736 46310
737 46310
738 46310
739 46310
740 46310
741 46310
742 46310
927 48623
929 48626
931 48628
1280 48764

8 CFR

3 47379
214 46697
245 46697
248 46697
274a 46697
287 48334
299 46697

Proposed Rules:
214 48223

9 CFR

54 46686
79 46686

Proposed Rules:
51 47593
94 46228

10 CFR

72 47380
710 47061

Proposed Rules:
2 .....46230, 48828
20 46230
50 .....46230, 48828
51 48828
52 .....48828, 48832
72 47059
852 .....46742, 48630

11 CFR

Proposed Rules:
100 47120
104 47120
113 47120

12 CFR

5 49093
28 49093
201 49098
225 48532

701 48205
707 48206
749 46307
1510 47070
1750 47730
1770 47550

Proposed Rules:

8 48983
614 48098
703 48742
704 48742
1710 47557
1773 47563

13 CFR

120 ....47072, 47877
134 47072

14 CFR

25 46937
39 ....46214, 46509, 46510, 46512, 46515, 46517, 46939, 47380, 47571, 47573, 47575, 47878, 47881, 47883, 48535, 48538, 48789, 48791, 49099
71 ....46216, 46366, 47577, 48540, 48792, 48793, 48794, 48953
91 ....47372, 48942
95 49101
97 ....46940, 47074, 48541, 48543, 48545
103 47372

Proposed Rules:

25 48836
39 ....46239, 46241, 46243, 46246, 46247, 46562, 46968, 47600, 47899, 47901, 48102, 48381, 48384, 48388, 48631, 48985, 48987, 48989, 48991, 48993, 49148
71 ....46366, 47120
121 46308
139 46308
161 47601

15 CFR

922 46942

Proposed Rules:

50 48013
80 48013
801 46407

17 CFR

3 47059
170 47059
211 48335

19 CFR

148 46217
159 48546
178 48546

20 CFR

1 47382
30 47382

Proposed Rules:

200 46408

21 CFR

173 48208
510 ....46367, 46368, 46518, 47959
520 ....46369, 47959, 47962
522 ....46705, 47959
524 ....46368, 46369, 46705
556 46370
558 ....46371, 46518, 46705, 47076, 47959, 47962
872 46951
878 46951
880 46951
882 46951
884 46951
892 46951
1313 46519

Proposed Rules:

888 46563
1300 46567
1301 46567
1304 46567
1305 46567
1306 46567

22 CFR

Proposed Rules:

41 48224

23 CFR

Proposed Rules:

625 48103
650 ....49152, 49154

24 CFR

Proposed Rules:

200 48080
203 46502

25 CFR

11 48085
103 46307

28 CFR

0 ....47379, 47382
810 48336

Proposed Rules:

25 48390

29 CFR

4022 47885
4044 47885

30 CFR

Proposed Rules:

914 48390
915 48841
918 48393
943 48396

31 CFR

1 48555

32 CFR

230 46372
231 46707
231a 46372

33 CFR

100 ....46374, 46375, 46377, 46521, 47384, 48954
117 ....46522, 46523, 46525, 47077, 47577, 47578, 48556, 48558, 48955
165 ....46218, 47385, 48209, 48780, 48782, 48795, 48956, 49104, 49106

Proposed Rules:

100 48014
117 ....47121, 47123, 47601

36 CFR

Proposed Rules:

1230 47125
1254 46752

37 CFR

1 47387
6 48338
104 47387

Proposed Rules:

1 46409
260 ....46250, 48648

38 CFR

3 48558
13 48558

Proposed Rules:

3 48845
17 46499

39 CFR

Proposed Rules:

111 48846

40 CFR

51 47887
52 ....46220, 46379, 46525, 46727, 46953, 47078, 47083, 47086, 47392, 47578, 47887, 48087, 48209, 48340, 48347, 48348, 48349, 48561, 48796, 48806, 48957, 49107, 49108
61 48211
62 ....46960, 48355, 48564
63 ....47579, 48211
70 ....48357, 48806
81 ....47086, 48349, 48808
96 47887
97 ....47887, 48567
141 46221
180 ....46381, 46390, 46729, 47394, 47403, 47964, 47971, 47979, 47994, 48003, 48089, 48577, 48585, 48593, 48601, 48961, 49110
271 ....46961, 49118
300 ....46533, 47093, 47583, 48968, 48969

Proposed Rules:

52 ....46415, 46571, 46573, 46753, 46754, 46755, 46758, 46760, 46971, 47129, 47130, 47139, 47142, 47145, 47419, 47603, 48399, 48401, 48648, 48847, 48850, 48995
62 ....46972, 48401
63 ....47611, 48174
70 ....46972, 47428, 48402, 48851
81 48401
141 ....46251, 46928
180 46415
271 46976
300 ....46574, 47153, 47612, 48018

41 CFR

101–11 48357
101–46 48614
102–39 48614
102–117 48812
102–118 48812
102–193 48357
102–194 48357
102–195 48357

42 CFR

2 47591
52 47591
124 49262
411 48078
412 46902
422 47410
447 46397

Proposed Rules:

431 46763

45 CFR

Ch. XI 47095
96 46225
670 46739
1000 48970

Proposed Rules:

1611 46976
1626 46977

46 CFR

1 48617
10 48617
12 48617
28 48617
30 48617
32 48617
35 48617
67 48617
78 48617
97 48617
131 48617
161 48617
162 48617
167 48617
182 48617
196 48617
199 48617
401 48617

Proposed Rules:

67 47431
68 47431

47 CFR

0 48972
1 47890
2 47591
21 47890
52 47591
61 47890
73 ....46399, 47413, 47890, 47897, 47898
74 47890
76 ....47890, 48219, 48981, 49124

Proposed Rules:

2 ....47618, 47621
69 48406
73 ....46425, 46426, 46427, 47432, 47433, 47903, 47904, 48107, 48108, 48851, 48852
90 47435

48 CFR

204 47096
207 47107
219 47108
226 47110
252 ....47096, 47108, 47110, 47112
253 ....47096, 48621
1823 48361
1852 48361

Proposed Rules:

213 47153

215 48649
225 47155
226 47158
244 47159
247 47153
252 ....47153, 47155, 48652

49 CFR

199 47114
571 48220
593 48362

Proposed Rules:

172 47443
174 47443
175 47443
176 47443
177 47443
604 48110
1111 48853

50 CFR

17 ....46536, 46548
32 46346
300 46740
635 ....46400, 46401, 48221, 48812
640 49135
648 ....47413, 48011, 49136
660 ....46403, 46966, 48370
679 ....46404, 46967, 47416, 47417, 47418, 47591, 48371, 48813, 48822, 48823, 49146

Proposed Rules:

17 ....46251, 46428, 46575, 48225, 48227, 48228, 49158
216 47905
223 47625
648 ....46978, 46979, 48020, 48996
679 48410
697 48853

REMINDERS

The items in this list were editorially compiled as an aid to Federal Register users. Inclusion or exclusion from this list has no legal significance.

RULES GOING INTO EFFECT SEPTEMBER 26, 2001

AGRICULTURE DEPARTMENT

Agricultural Marketing Service

Potatoes (Irish) grown in—

Colorado; published 9-25-01

COMMERCE DEPARTMENT

National Oceanic and Atmospheric Administration

Fishery conservation and management:

West Coast States and Western Pacific fisheries—

Coastal pelagic species; published 8-27-01

ENVIRONMENTAL PROTECTION AGENCY

Hazardous waste program authorizations:

California; published 9-26-01

Pesticides; tolerances in food, animal feeds, and raw agricultural commodities:

Zoxamide and its metabolites; published 9-26-01

HEALTH AND HUMAN SERVICES DEPARTMENT

Medical facility construction and modernization:

Uncompensated services; compliance alternatives; published 9-26-01

PERSONNEL MANAGEMENT OFFICE

Health benefits, Federal employees:

Health insurance premiums—

TRICARE-eligible's enrollment suspension; published 9-26-01

TRANSPORTATION DEPARTMENT

Federal Aviation Administration

Airworthiness directives:

Aerospatiale; published 8-22-01

Lockheed; published 8-22-01

McDonnell Douglas; published 8-22-01

COMMENTS DUE NEXT WEEK

AGRICULTURE DEPARTMENT

Agricultural Marketing Service

Nectarines and peaches grown in—

California; comments due by 10-1-01; published 7-31-01

Oranges and grapefruit; grade standards; comments due by 10-1-01; published 9-24-01

AGRICULTURE DEPARTMENT

Farm Service Agency

United States Warehouse Act; implementation; comments due by 10-4-01; published 9-4-01

COMMERCE DEPARTMENT

National Oceanic and Atmospheric Administration

Endangered and threatened species:

Marine and anadromous species—

California Central Valley spring-run chinook, California coastal chinook, Northern California steelhead, and Central California coast coho; comments due by 10-1-01; published 8-17-01

West Coast salmonids; evolutionary significant units; comments due by 10-1-01; published 9-13-01

Fishery conservation and management:

West Coast States and Western Pacific fisheries—

Pacific Coast groundfish; comments due by 10-1-01; published 8-30-01

Pacific whiting; comments due by 10-5-01; published 9-20-01

Ocean and coastal resource management:

Marine sanctuaries—

Submarine cable permit; fair market value analysis; comments due by 10-1-01; published 8-17-01

Oil Pollution Act:

Natural resource damage assessments; comments due by 10-1-01; published 7-31-01

COMMERCE DEPARTMENT

Patent and Trademark Office

Patent cases:

Prior-filled applications; benefit claim under eighteen-month publication of patent applications; requirements; comments due by 10-5-01; published 9-5-01

COMMODITY FUTURES TRADING COMMISSION

Security futures products:

Cash settlement and regulatory halt requirements; comments due by 10-1-01; published 8-30-01

CONSUMER PRODUCT SAFETY COMMISSION

Baby bath seats and rings; comments due by 10-1-01; published 8-1-01

DEFENSE DEPARTMENT

Civilian health and medical program of uniformed services (CHAMPUS):

Individual case mangement program for persons with extraordinary conditions; comments due by 10-1-01; published 8-1-01

TRICARE program—

CHAMPUS beneficiaries 65 and older; eligibility and payment procedures; comments due by 10-2-01; published 8-3-01

ENERGY DEPARTMENT

Federal Energy Regulatory Commission

Electric utilities (Federal Power Act):

Public utility filing requirements; comments due by 10-5-01; published 8-6-01

ENVIRONMENTAL PROTECTION AGENCY

Air pollutants, hazardous; national emission standards:

Coke ovens: pushing, quenching, and battery stacks; comments due by 10-1-01; published 7-3-01

Reinforced plastic composites production; comments due by 10-1-01; published 8-2-01

Air quality implementation plans; approval and promulgation; various States:

Delaware; comments due by 10-1-01; published 8-30-01

Maryland; comments due by 10-5-01; published 9-5-01

New York; comments due by 10-1-01; published 8-30-01

Pennsylvania; comments due by 10-1-01; published 8-30-01

Hazardous waste management system:

Hazardous waste manifest system modification; comments due by 10-4-01; published 8-10-01

Hazardous waste:

Identification and listing—

Exclusions; comments due by 10-5-01; published 8-21-01

Pesticides; tolerances in food, animal feeds, and raw agricultural commodities:

Atrazine, etc.; comments due by 10-1-01; published 8-1-01

Carfentrazone-ethyl; comments due by 10-1-01; published 8-1-01

Lysophosphatidyl-ethanolamine; comments due by 10-1-01; published 8-1-01

Oxadiazon and tetraditon; comments due by 10-1-01; published 8-1-01

Rhodamine B; comments due by 10-1-01; published 8-2-01

Sulfuryl fluoride; comments due by 10-5-01; published 9-5-01

Water supply:

National primary drinking water regulations—

Unregulated contaminant monitoring; comments due by 10-4-01; published 9-4-01

Unregulated contaminant monitoring; comments due by 10-4-01; published 9-4-01

FEDERAL COMMUNICATIONS COMMISSION

Radio stations; table of assignments:

Michigan; comments due by 10-1-01; published 8-24-01

Oklahoma and Texas; comments due by 10-1-01; published 8-24-01

Texas; comments due by 10-1-01; published 8-24-01

HEALTH AND HUMAN SERVICES DEPARTMENT

Children and Families Administration

Medicare and Medicaid:

Health Care Financing Administration; agency name change to Centers for Medicare and Medicaid Services; technical amendments; comments due by 10-1-01; published 7-31-01

HEALTH AND HUMAN SERVICES DEPARTMENT

Centers for Medicare & Medicaid Services

Medicare and Medicaid:

Health Care Financing Administration; agency name change to Centers for Medicare and Medicaid Services; technical amendments; comments due by 10-1-01; published 7-31-01

Medicare:

Hospital outpatient services; prospective payment system; comments due by 10-3-01; published 8-24-01

Physician fee schedule (2002 CY); payment policies and relative value unit adjustments; comments due by 10-1-01; published 8-2-01

HEALTH AND HUMAN SERVICES DEPARTMENT

Child Support Enforcement Office

Medicare and Medicaid:

Health Care Financing Administration; agency name change to Centers for Medicare and Medicaid Services; technical amendments; comments due by 10-1-01; published 7-31-01

HEALTH AND HUMAN SERVICES DEPARTMENT

Medicare and Medicaid:

Health Care Financing Administration; agency name change to Centers for Medicare and Medicaid Services; technical amendments; comments due by 10-1-01; published 7-31-01

HEALTH AND HUMAN SERVICES DEPARTMENT

Inspector General Office, Health and Human Services Department

Medicare and Medicaid:

Health Care Financing Administration; agency name change to Centers for Medicare and Medicaid Services; technical amendments; comments due by 10-1-01; published 7-31-01

HEALTH AND HUMAN SERVICES DEPARTMENT

Public Health Service

Medicare and Medicaid:

Health Care Financing Administration; agency name change to Centers for Medicare & Medicaid Services; technical amendments; comments due by 10-1-01; published 7-31-01

INTERIOR DEPARTMENT

Fish and Wildlife Service

Endangered and threatened species:

Critical habitat designations—

San Bernardino kangaroo rat; comments due by 10-4-01; published 9-4-01

Preble's meadow jumping mouse; comments due by 10-1-01; published 8-30-01

Sacramento splittail; comments due by 10-1-01; published 8-17-01

Fish and wildlife restoration; Federal aid to States:

National Coastal Wetlands Conservation Grant Program; comments due by 10-4-01; published 8-20-01

NATIONAL CREDIT UNION ADMINISTRATION

Credit unions:

Organization and operations—

Compensation; definition amended; comments due by 10-2-01; published 8-3-01

NUCLEAR REGULATORY COMMISSION

Spent nuclear fuel and high-level radioactive waste; independent storage; licensing requirements:

Approved spent fuel storage casks; list; comments due by 10-1-01; published 8-30-01

SECURITIES AND EXCHANGE COMMISSION

Security futures products:

Cash settlement and regulatory halt requirements; comments due by 10-1-01; published 8-30-01

TRANSPORTATION DEPARTMENT

Coast Guard

Drawbridge operations:

Florida; comments due by 9-30-01; published 7-11-01

TRANSPORTATION DEPARTMENT

Federal Aviation Administration

Advisory circulars; availability, etc.:

Turbine engine powered airplanes; fuel venting and exhaust emissions requirements; comments due by 10-1-01; published 8-1-01

Aircraft:

Repair stations; comments due by 10-5-01; published 8-6-01

Airworthiness directives:

Airbus; comments due by 10-1-01; published 8-31-01

Boeing; comments due by 10-5-01; published 8-6-01

Bombardier; comments due by 10-4-01; published 9-4-01

JanAero Devices; comments due by 10-5-01; published 8-22-01

Class D and Class E airspace; comments due by 10-1-01; published 8-17-01

Class E airspace; comments due by 10-1-01; published 8-17-01

Class E5 airspace; comments due by 10-5-01; published 9-5-01

TRANSPORTATION DEPARTMENT

Maritime Administration

Maritime carriers and related activities:

Vessel transfer to foreign registry upon revocation of fishery endorsement; denial; comments due by 10-2-01; published 8-3-01

Vessel documentation:

Fishery endorsement; U.S.-flag vessels of 100 feet or greater in registered length; comments due by 10-1-01; published 8-31-01

TRANSPORTATION DEPARTMENT

National Highway Traffic Safety Administration

Motor vehicle safety standards:

Interior trunk release; comments due by 10-1-01; published 8-17-01

TRANSPORTATION DEPARTMENT

Research and Special Programs Administration

Hazardous materials:

Hazardous materials transportation—

Hazardous waste manifest requirements; comments due by 10-4-01; published 8-8-01

Incident reporting requirements and incident report form; revisions; comments due by 10-1-01; published 7-3-01

TREASURY DEPARTMENT

Customs Service

Air commerce:

Private aircraft programs; General Aviation Telephonic Program establishment and Overflight Program revisions; comments due by 10-2-01; published 8-3-01

LIST OF PUBLIC LAWS

This is a continuing list of public bills from the current session of Congress which have become Federal laws. It may be used in conjunction with ''P L U S'' (Public Laws Update Service) on 202–523–6641. This list is also available online at *http://www.nara.gov/fedreg/plawcurr.html*.

The text of laws is not published in the **Federal Register** but may be ordered in ''slip law'' (individual pamphlet) form from the Superintendent of Documents, U.S. Government Printing Office, Washington, DC 20402 (phone, 202–512–1808). The text will also be made available on the Internet from GPO Access at *http://www.access.gpo.gov/nara/nara005.html*. Some laws may not yet be available.

H.R. 2926/P.L. 107–42

Air Transportation Safety and System Stabilization Act (Sept. 22, 2001; 115 Stat. 230)

Last List September 24, 2001

Public Laws Electronic Notification Service (PENS)

PENS is a free electronic mail notification service of newly enacted public laws. To subscribe, go to *http://hydra.gsa.gov/archives/publaws-l.html* or send E-mail to **listserv@listserv.gsa.gov** with the following text message:

SUBSCRIBE PUBLAWS-L Your Name.

Note: This service is strictly for E-mail notification of new laws. The text of laws is not available through this service. **PENS** cannot respond to specific inquiries sent to this address.