AUTHENTICATED
U.S. GOVERNMENT
INFORMATION
GPO

Federal Register

10–2–01 Tuesday
Vol. 66 No. 191 Oct. 2, 2001
Pages 50095–50286

The **FEDERAL REGISTER** is published daily, Monday through Friday, except official holidays, by the Office of the Federal Register, National Archives and Records Administration, Washington, DC 20408, under the Federal Register Act (44 U.S.C. Ch. 15) and the regulations of the Administrative Committee of the Federal Register (1 CFR Ch. I). The Superintendent of Documents, U.S. Government Printing Office, Washington, DC 20402 is the exclusive distributor of the official edition.

The **Federal Register** provides a uniform system for making available to the public regulations and legal notices issued by Federal agencies. These include Presidential proclamations and Executive Orders, Federal agency documents having general applicability and legal effect, documents required to be published by act of Congress, and other Federal agency documents of public interest.

Documents are on file for public inspection in the Office of the Federal Register the day before they are published, unless the issuing agency requests earlier filing. For a list of documents currently on file for public inspection, see http://www.nara.gov/fedreg.

The seal of the National Archives and Records Administration authenticates the Federal Register as the official serial publication established under the Federal Register Act. Under 44 U.S.C. 1507, the contents of the **Federal Register** shall be judicially noticed.

The **Federal Register** is published in paper and on 24x microfiche. It is also available online at no charge as one of the databases on GPO Access, a service of the U.S. Government Printing Office.

The online edition of the **Federal Register** is issued under the authority of the Administrative Committee of the Federal Register as the official legal equivalent of the paper and microfiche editions (44 U.S.C. 4101 and 1 CFR 5.10). It is updated by 6 a.m. each day the **Federal Register** is published and it includes both text and graphics from Volume 59, Number 1 (January 2, 1994) forward.

GPO Access users can choose to retrieve online **Federal Register** documents as TEXT (ASCII text, graphics omitted), PDF (Adobe Portable Document Format, including full text and all graphics), or SUMMARY (abbreviated text) files. Users should carefully check retrieved material to ensure that documents were properly downloaded.

On the World Wide Web, connect to the **Federal Register** at http://www.access.gpo.gov/nara. Those without World Wide Web access can also connect with a local WAIS client, by Telnet to swais.access.gpo.gov, or by dialing (202) 512-1661 with a computer and modem. When using Telnet or modem, type swais, then log in as guest with no password.

For more information about GPO Access, contact the GPO Access User Support Team by E-mail at gpoaccess@gpo.gov; by fax at (202) 512–1262; or call (202) 512–1530 or 1–888–293–6498 (toll free) between 7 a.m. and 5 p.m. Eastern time, Monday–Friday, except Federal holidays.

The annual subscription price for the **Federal Register** paper edition is $638, or $697 for a combined **Federal Register,** Federal Register Index and List of CFR Sections Affected (LSA) subscription; the microfiche edition of the **Federal Register** including the Federal Register Index and LSA is $253. Six month subscriptions are available for one-half the annual rate. The charge for individual copies in paper form is $9.00 for each issue, or $9.00 for each group of pages as actually bound; or $2.00 for each issue in microfiche form. All prices include regular domestic postage and handling. International customers please add 25% for foreign handling. Remit check or money order, made payable to the Superintendent of Documents, or charge to your GPO Deposit Account, VISA, MasterCard or Discover. Mail to: New Orders, Superintendent of Documents, P.O. Box 371954, Pittsburgh, PA 15250–7954.

There are no restrictions on the republication of material appearing in the **Federal Register.**

How To Cite This Publication: Use the volume number and the page number. Example: 66 FR 12345.

SUBSCRIPTIONS AND COPIES

PUBLIC	
Subscriptions:	
Paper or fiche	**202–512–1800**
Assistance with public subscriptions	**512–1806**
General online information	**202–512–1530; 1–888–293–6498**
Single copies/back copies:	
Paper or fiche	**512–1800**
Assistance with public single copies	**512–1803**
FEDERAL AGENCIES	
Subscriptions:	
Paper or fiche	**523–5243**
Assistance with Federal agency subscriptions	**523–5243**

Printed on recycled paper.

Contents

Federal Register

Vol. 66, No. 191

Tuesday, October 2, 2001

Arts and Humanities, National Foundation
See National Foundation on the Arts and the Humanities

Centers for Disease Control and Prevention
NOTICES
Meetings:
Healthcare Infection Control Practices Advisory Committee, 50201

Coast Guard
RULES
Ports and waterways safety:
Cumberland City, TN to Alexandria, LA; DOD barge flotilla; security zone, 50108–50110
Kennebec River, Bath, ME; safety and security zones, 50106–50108
Station Jonesport et al., ME; safety and security zones, 50105–50106
NOTICES
Meetings:
Great Lakes Regional Waterways Management Forum, 50242–50243

Commerce Department
See International Trade Administration
See National Oceanic and Atmospheric Administration

Copyright Office, Library of Congress
NOTICES
Cable royalty funds:
Cable statutory license (1999); Phase I or Phase II controversy ascertainment; comment request, 50219–50220
Satellite royalty funds; 1999 funds; controversy ascertainment, 50220–50222

Customs Service
RULES
User fee airports; Customs services fees, 50103–50105
NOTICES
Generalized System of Preferences:
Procedures if program expires, 50248–50249

Energy Department
See Energy Efficiency and Renewable Energy Office
See Federal Energy Regulatory Commission
NOTICES
Environmental statements; notice of intent:
Scrap metals disposition; public scoping meetings, 50175–50176
Grants and cooperative agreements; availability, etc.:
University Reactor Instrumentation Program, 50176
Presidential permit applications:
GenPower New York, L.L.C., 50174–50175
Radioactive waste:
Yucca Mountain, NV—
Site recommendation consideration; hearings, 50176–50177

Energy Efficiency and Renewable Energy Office
NOTICES
Meetings:
Federal Energy Management Program; Federal purchasing of energy-efficient standby power devices, 50177

Environmental Protection Agency
RULES
Air programs; State authority delegations:
Delaware, 50116–50124
Iowa, Missouri, and Nebraska, 50110–50116
PROPOSED RULES
Air pollution control:
State operating permits programs—
Arizona, 50136–50139
Air programs; State authority delegations:
Delaware, 50135–50136
Air quality implementation plans:
Preparation, adoption, and submittal—
Regional haze standards; best available retrofit technology determinations; implementation guidelines, 50135
Air quality implementation plans; approval and promulgation; various States:
Arizona, 50251–50285
NOTICES
Agency information collection activities:
Proposed collection; comment request, 50182–50183
Submission for OMB review; comment request, 50183–50185
Committees; establishment, renewal, termination, etc.:
National Environmental Justice Advisory Council, 50185
Grants and cooperative agreements; availability, etc.:
Leaking Underground Storage Tank Trust Fund USTFields Pilots, 50194
Meetings:
Scientific Counselors Board, 50194–50195
Reports and guidance documents; availability, etc.:
Recognizing completion of corrective action activities at RCRA facilities; comment request, 50195–50197
Superfund; response and remedial actions, proposed settlements, etc.:
San Gabriel Site, CA, 50197–50198
Superfund program:
Federal Agency Hazardous Waste Compliance Docket; Federal facilities; list update, 50185–50194

Executive Office of the President
See Presidential Documents

Farm Credit Administration
NOTICES
Meetings; Sunshine Act, 50198

Federal Aviation Administration
RULES
Class E airspace, 50101
VOR Federal airways, 50101–50102
PROPOSED RULES
Airworthiness directives:
Dornier, 50125–50127

NOTICES
Aeronautical land-use assurance; waivers:
Georgetown County Airport, SC, 50245–50246
Meetings:
RTCA, Inc., 50243–50244
Passenger facility charges; applications, etc.:
Austin Straubel International Airport, WI, 50244–50245
Cleveland Hopkins International Airport, OH, 50245
Tri-Cities Airport, WA, 50246
Reports and guidance documents; availability, etc.:
Equipment known to have high potential for interference when installed on rotorcraft with electronic controls providing critical functions, etc., 50246–50247

Federal Communications Commission
PROPOSED RULES
Common carrier services:
In-region interexchange services provided by incumbent independent local exchange carriers; special affiliate requirements; biennial regulatory review, 50139–50140
Telecommunications carriers' use of customer proprietary network and other customer information; non-accounting safeguards implementation, 50140–50147
NOTICES
Agency information collection activities:
Proposed collection; comment request, 50198–50199
Meetings:
North American Numbering Council, 50199–50200

Federal Energy Regulatory Commission
NOTICES
Agency information collection activities:
Proposed collection; comment request, 50178
Hydroelectric applications, 50178–50182
Meetings:
El Dorado Irrigation District, 50182
Applications, hearings, determinations, etc.:
Dominion Transmission, Inc., 50179–50180
San Diego Gas & Electric Co., 50180

Federal Reserve System
NOTICES
Banks and bank holding companies:
Formations, acquisitions, and mergers, 50200

Financial Management Service
See Fiscal Service

Fiscal Service
NOTICES
Surety companies acceptable on Federal bonds:
International Fidelity Insurance Co.; correction, 50249

Health and Human Services Department
See Centers for Disease Control and Prevention
NOTICES
Agency information collection activities:
Proposed collection; comment request, 50200
Meetings:
Vital and Health Statistics National Committee, 50200–50201

Indian Affairs Bureau
NOTICES
Agency information collection activities:
Proposed collection; comment request, 50201–50202
Liquor and tobacco sale or distribution ordinance:
Berry Creek Rancheria, CA, 50202–50205

Interior Department
See Indian Affairs Bureau
See Land Management Bureau
See Minerals Management Service
See National Indian Gaming Commission
See National Park Service
See Reclamation Bureau

International Trade Administration
NOTICES
Antidumping:
Carbon and alloy steel wire rod from—
Various countries, 50164–50173
Stainless steel sheet and strip in coils from—
Germany, 50173–50174

International Trade Commission
NOTICES
Import investigations:
Welded large diameter line pipe from—
Japan and Mexico, 50214

Labor Department
See Occupational Safety and Health Administration

Land Management Bureau
NOTICES
Oil and gas leases:
Wyoming, 50205

Legal Services Corporation
NOTICES
Grant and cooperative agreement awards:
Civil legal services to low-income clients; list, 50215–50219

Library of Congress
See Copyright Office, Library of Congress

Minerals Management Service
NOTICES
Environmental statements; availability, etc.:
Central and Western Gulf of Mexico OCS—
Oil and gas lease sales, 50205–50206

National Aeronautics and Space Administration
NOTICES
Patent licenses; non-exclusive, exclusive, or partially exclusive:
Phoenix Systems International, Inc., 50222
Profound Technologies, 50222
Solus Refrigeration, Inc., 50222
Ticona Polymers, Inc., 50222

National Foundation on the Arts and the Humanities
NOTICES
Meetings:
Combined Arts Advisory Panel, 50222–50223

National Indian Gaming Commission
PROPOSED RULES
Indian Gaming Regulatory Act:
Environment, public health, and safety, 50127–50135

National Oceanic and Atmospheric Administration
PROPOSED RULES
Endangered and threatened species:
Sea turtle conservation requirements, 50148–50159

Marine mammals:
Incidental taking—
Atlantic Large Whale Take Reduction Plan, 50160–50163

National Park Service
NOTICES
Environmental statements; availability, etc.:
Saugus Iron Works National Historic Site, MA, 50206–50207
Environmental statements; notice of intent:
George Washington Boyhood Home, VA; special resource study, 50206
Isle Royal National Park, MI, 50207
San Juan Island National Historical Park, WA, 50208
National Register of Historic Places:
Pending nominations, 50208–50213

National Science Foundation
NOTICES
Meetings; Sunshine Act, 50223

Nuclear Regulatory Commission
NOTICES
Meetings; Sunshine Act, 50223–50224
Applications, hearings, determinations, etc.:
SCA Services, 50223

Occupational Safety and Health Administration
NOTICES
Agency information collection activities:
Proposed collection; comment request, 50214–50215

Personnel Management Office
NOTICES
Agency information collection activities:
Submission for OMB review; comment request, 50224–50225
Meetings:
Federal Salary Council, 50225

Presidential Documents
PROCLAMATIONS
Special observances:
National Hispanic Heritage Month (Proc. 7471), 50097–50098
National Historically Black Colleges and Universities Week (Proc. 7472), 50099–50100
ADMINISTRATIVE ORDERS
Nuclear-related sanctions; waiver for India and Pakistan (Presidential Determination No. 2001-28), 50095

Public Debt Bureau
See Fiscal Service

Public Health Service
See Centers for Disease Control and Prevention

Reclamation Bureau
NOTICES
Environmental statements; notice of intent:
Central Valley Project, CA; San Luis Unit feature reevaluation, 50213–50214

Research and Special Programs Administration
PROPOSED RULES
Hazardous materials:
Hazardous materials transportation—
Loading, unloading, and storage; meetings cancelled, 50147–50148

Securities and Exchange Commission
RULES
Securities:
Firm quote and trade-through disclosure rules for options; compliance date extension, 50103
Securities, etc.:
Mutual fund after-tax returns; disclosure; compliance date extension, 50102
NOTICES
Agency information collection activities:
Submission for OMB review; comment request, 50225
Joint industry plan:
National Association of Securities Dealers, Inc., et al., 50226–50237
Self-regulatory organizations; proposed rule changes:
Depository Trust Co., 50237
Pacific Exchange, Inc., 50237–50240

Small Business Administration
NOTICES
Agency information collection activities:
Submission for OMB review; comment request, 50240–50241
Disaster loan areas:
Military Reservist Economic Injury Disaster Loan Program; National Emergency as result of attacks on World Trade Center and Pentagon; various States, 50241–50242
Texas, 50242
Interest rates; quarterly determinations, 50242

Transportation Department
See Coast Guard
See Federal Aviation Administration
See Research and Special Programs Administration

Treasury Department
See Customs Service
See Fiscal Service
NOTICES
Agency information collection activities:
Submission for OMB review; comment request, 50247
Meetings:
Debt Management Advisory Committee, 50247–50248

Separate Parts In This Issue

Part II
Environmental Protection Agency, 50251–50285

Reader Aids
Consult the Reader Aids section at the end of this issue for phone numbers, online resources, finding aids, reminders, and notice of recently enacted public laws.

CFR PARTS AFFECTED IN THIS ISSUE

A cumulative list of the parts affected this month can be found in the Reader Aids section at the end of this issue.

3 CFR

Proclamations:

7471 50097
7472 50099

Administrative Orders:

Presidential Determinations:
No. 2001–28 of September 22, 2001 50095

14 CFR

71 (2 documents) 50101

Proposed Rules:

39 50125

17 CFR

230 50102
239 50102
240 50103
270 50102
274 50102

19 CFR

122 50103

25 CFR

Proposed Rules:

580 50127

33 CFR

165 (3 documents) 50105, 50106, 50108

40 CFR

60 50110
61 50110
63 (2 documents) 50110, 50116

Proposed Rules:

51 50135
52 50252
63 50135
70 50136

47 CFR

Proposed Rules:

64 (2 documents) 50139, 50140

49 CFR

Proposed Rules:

171 50147
173 50147
174 50147
175 50147
176 50147
177 50147
178 50147

50 CFR

Proposed Rules:

222 50148
223 50148
229 50160

Federal Register
Vol. 66, No. 191
Tuesday, October 2, 2001

Presidential Documents

Title 3—

The President

Presidential Determination No. 2001–28 of September 22, 2001

Waiver of Nuclear-Related Sanctions on India and Pakistan

Memorandum for the Secretary of State

Pursuant to section 9001(b) of the Department of Defense Appropriations Act, 2000 (Public Law 106–79), I hereby determine and certify to the Congress that the application to India and Pakistan of the sanctions and prohibitions contained in subparagraphs (B), (C), and (G) of section 102(b)(2) of the Arms Export Control Act would not be in the national security interests of the United States. Furthermore, pursuant to section 9001(a) of the Department of Defense Appropriations Act, 2000 (Public Law 106–79), I hereby waive, with respect to India and Pakistan, to the extent not already waived, the application of any sanction contained in section 101 or 102 of the Arms Export Control Act, section 2(b)(4) of the Export Import Bank Act of 1945, and section 620E(e) of the Foreign Assistance Act of 1961, as amended.

You are authorized and directed to transmit this determination and certification to the appropriate committees of the Congress and to arrange for its publication in the **Federal Register**.

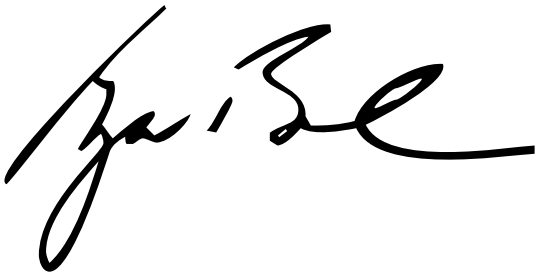

THE WHITE HOUSE,
Washington, September 22, 2001.

[FR Doc. 01–24721
Filed 10–1–01; 8:45 am]
Billing code 4710–10–M

Presidential Documents

Proclamation 7471 of September 28, 2001

National Hispanic Heritage Month, 2001

By the President of the United States of America

A Proclamation

For more than 30 years, the United States has annually celebrated the rich history and cultural traditions of our Nation's Hispanic American people. National Hispanic Heritage Month provides us an opportunity to express deep appreciation to Hispanic Americans for their countless contributions to our society and to pay tribute again to America's distinctive diversity.

Since our Nation's founding, Hispanic Americans have played an integral role in our country's exceptional story of success. Hispanic Americans served with heroism in every major American military conflict. The Continental Army benefited from the valor of Bernardo de Gálvez, who led his frequently outnumbered troops to numerous victories against the British. Luis Esteves organized the first Puerto Rico National Guard and rose through the ranks of the U.S. Army to become a distinguished Brigadier General. And 38 Hispanics have earned our Nation's highest military decoration, the Medal of Honor. The United States academic and scientific communities benefited from the contributions of Hispanic Americans like physicist Luis Walter Alvarez, who was awarded the Nobel Prize in Physics in 1986. Business leaders like Roberto Goizueta have had a positive effect on our Nation's economy; and many Hispanics have greatly influenced America's artistic, legal, and political communities.

Today, Hispanic culture continues to shape the American experience. More than 30 million Americans, about 1 in 8 people in the United States, claim Hispanic origin. They contribute to every walk of contemporary American life, while simultaneously preserving the unique customs and traditions of their ancestors. All Americans, regardless of national origin, celebrate the vibrant Hispanic American spirit that influences our Nation's art, music, food, and faiths. We also celebrate the practices of commitment to family, love of country, and respect for others, virtues that transcend ethnicity, reflect the American spirit, and are nobly exemplified in the Hispanic American community.

The strong ties that Hispanic Americans maintain with their ancestral homeland remind us that the United States must pursue robust relations with its trading partners in Latin America and the Caribbean. The future of our hemisphere is closely tied to these relationships, and improving trade will play a vital role in building important links with our Hispanic neighbors. Maintaining open and free trade creates job opportunities and promotes economic growth, improving the welfare of every citizen in every land it touches. Thus, we will negotiate for freer markets, which will allow us the opportunity to obtain better protections for our hemisphere's environment and will promote political freedom throughout the region.

We have a great opportunity before us. By working together, we can achieve a fully democratic hemisphere, bound together by good will, cultural understanding, and free trade. The many contributions of Hispanic Americans to our Nation will help us reach this important goal by helping connect our country with the Hispanic nations to our south. This month, we celebrate the talents, culture, and spirit of Hispanic Americans, which deeply enrich our country and bless our people.

The Congress, by Public Law 100–402, has authorized and requested the President to issue annually a proclamation designating September 15 through October 15, as ''National Hispanic Heritage Month.'' I am proud to do so.

NOW, THEREFORE, I, GEORGE W. BUSH, President of the United States of America, by virtue of the authority vested in me by the Constitution and laws of the United States, do hereby proclaim September 15 through October 15, 2001, as National Hispanic Heritage Month. I call upon all the people of the United States to observe this month with appropriate ceremonies and activities.

IN WITNESS WHEREOF, I have hereunto set my hand this twenty-eighth day of September, in the year of our Lord two thousand one, and of the Independence of the United States of America the two hundred and twenty-sixth.

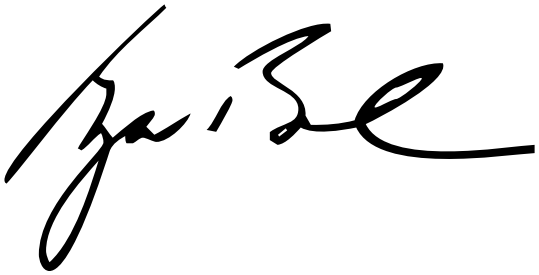

[FR Doc. 01–24771
Filed 10–1–01; 8:45 am]
Billing code 3195–01–P

Presidential Documents

Proclamation 7472 of September 28, 2001

National Historically Black Colleges and Universities Week, 2001

By the President of the United States of America

A Proclamation

For more than a century, our Nation's Historically Black Colleges and Universities (HBCUs) have played a vital role in providing opportunities for excellence in higher education to millions of African American students.

Throughout their history, these institutions of higher learning persevered in the face of many obstacles, offering university degrees to African Americans at a time when most schools refused them admission. Some of our HBCUs began when society was deeply segregated; and some were founded when the Nation still permitted the scourge of slavery. The Civil War eradicated slavery in America; and the United States Supreme Court ended the racial segregation of our schools. Notwithstanding the removal of these blights from the American scene, HBCUs have remained committed to providing African American students with extraordinary educational opportunities. The HBCUs' consistent tradition of offering high-quality, academic programs has enabled their students and graduates to prosper.

The success of our HBCUs should be a source of great pride for all Americans. Almost 300,000 African Americans currently are enrolled in HBCUs, and among their graduates are Members of Congress, hundreds of elected officials, military officers, physicians, teachers, attorneys, judges, ambassadors, and business executives.

Committed to excellence as well as to opportunity, our HBCUs reflect the determination and spirit that are essential to achieving my Administration's goal of educational success at every level. All Americans should have opportunities to pursue the American dream. Historically Black Colleges and Universities play an essential role in providing access to that dream for African Americans, and I salute them for their continuing commitment to serving African American students.

NOW, THEREFORE, I, GEORGE W. BUSH, President of the United States of America, by virtue of the authority vested in me by the Constitution and laws of the United States, do hereby proclaim September 24 through September 30, 2001, as National Historically Black Colleges and Universities Week. I call upon the people of the United States, including government officials, educators, and administrators, to observe this week with appropriate programs, ceremonies, and activities, thereby demonstrating our appreciation of and support for these important educational institutions.

IN WITNESS WHEREOF, I have hereunto set my hand this twenty-eighth day of September, in the year of our Lord two thousand one, and of the

Independence of the United States of America the two hundred and twenty-sixth.

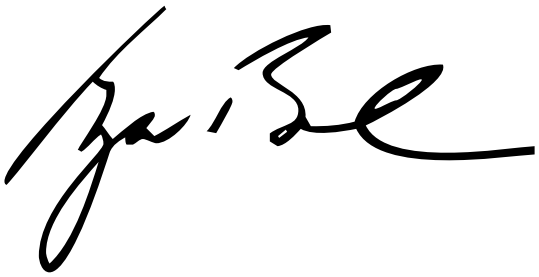

[FR Doc. 01–24772
Filed 10–1–01; 8:45 am]
Billing code 3195–01–P

Rules and Regulations

Federal Register

Vol. 66, No. 191

Tuesday, October 2, 2001

This section of the FEDERAL REGISTER contains regulatory documents having general applicability and legal effect, most of which are keyed to and codified in the Code of Federal Regulations, which is published under 50 titles pursuant to 44 U.S.C. 1510.

The Code of Federal Regulations is sold by the Superintendent of Documents. Prices of new books are listed in the first FEDERAL REGISTER issue of each week.

DEPARTMENT OF TRANSPORTATION

Federal Aviation Administration

14 CFR Part 71

[Airspace Docket No. 2001–ASW–11]

Revision of Class E Airspace, Clinton, AR

AGENCY: Federal Aviation Administration (FAA), DOT.

ACTION: Direct final rule; confirmation of effective date.

SUMMARY: This notice confirms the effective date of a direct final rule which revises the Class E Airspace, Clinton, AR.

EFFECTIVE DATE: The direct final rule published at 66 FR 36908 is effective 0901 UTC, November 1, 2001.

FOR FURTHER INFORMATION CONTACT: Joseph R. Yadouga, Airspace Branch, Air Traffic Division, Southwest Region, Federal Aviation Administration, Fort Worth, TX 76193–0520, telephone: 817–222–5597.

SUPPLEMENTARY INFORMATION:

The FAA published this direct final rule with a request for comments in the **Federal Register** on July 16, 2001, (66 FR 36908). The FAA uses the direct final rulemaking procedure for a noncontroversial rule where the FAA believes that there will be no adverse public comment. This direct final rule advised the public that no adverse comments were anticipated, and that unless a written adverse comment, or a written notice of intent to submit such an adverse comment, were received within the comment period, the regulation would become effective on November 1, 2001. No adverse comments were received, and, thus, this action confirms that this direct final rule will be effective on that date.

Issued in Fort Worth, TX, on September 24, 2001.

Robert N. Stevens,

Acting Manager, Air Traffic Division, Southwest Region.

[FR Doc. 01–24611 Filed 10–1–01; 8:45 am]

BILLING CODE 4910–13–M

DEPARTMENT OF TRANSPORTATION

Federal Aviation Administration

14 CFR Part 71

[Docket No. FAA–2001–9129; Airspace Docket No. 01–AWA–3]

RIN 2120–AA66

Realignment of Federal Airway V–358; TX

AGENCY: Federal Aviation Administration (FAA), DOT.

ACTION: Final rule.

SUMMARY: This action realigns Federal Airway 358 (V–358) Waco, TX, so as to prevent instrument flight rules (IFR) aircraft navigating on the airway from encroaching on the newly established Prohibited Area 49 (P–49), Crawford, TX. P–49 was established to enhance security and assist the United States Secret Service in accomplishing its mission of providing security for the President of the United States.

EFFECTIVE DATE: 0901 UTC, November 1, 2001.

FOR FURTHER INFORMATION CONTACT: Steve Rohring, Airspace and Rules Division, ATA–400, Office of Air Traffic Airspace Management, Federal Aviation Administration, 800 Independence Avenue, SW., Washington, DC 20591; telephone: (202) 267–8783.

SUPPLEMENTARY INFORMATION:

Background

On March 7, the Department of the Treasury, United States Secret Service requested that the FAA realign V–358 to prevent IFR aircraft navigating on the airway from encroaching on newly established P–49. As currently aligned, V–358 passes through the center of P–49 prohibited airspace (Airspace Docket No. 01–AWA–1, 66 FR 16391).

The Rule

This amendment to 14 CFR part 71 realigns V–358 to prevent IFR aircraft navigating on the airway from entering into newly established P–49. This action is necessary to assist the United States Secret Service in accomplishing its mission of providing security for the President of the United States. Because this action is needed for the security of the President, I find that notice and public procedure under 5 U.S.C. 553(b) are impracticable. Federal airways are published in paragraph 6010(a) of FAA Order 7400.9J dated August 31, 2001, and effective September 16, 2001, which is incorporated by reference in 14 CFR 71.1. The Federal airway listed in this document will be published subsequently in the Order.

This regulation is limited to an established body of technical regulations for which frequent and routine amendments are necessary to keep them operationally current. It, therefore—(1) is not a ''significant regulatory action'' under Executive Order 12866; (2) is not a ''significant rule'' under DOT Regulatory Policies and Procedures (44 FR 11034; February 26, 1979); and (3) does not warrant preparation of a regulatory evaluation as the anticipated impact is so minimal. Since it has been determined that this is a routine matter that will only affect air traffic procedures and air navigation, it is certified that this rule, when promulgated, will not have a significant economic impact on a substantial number of small entities under the criteria of the Regulatory Flexibility Act.

Environmental Review

The FAA has determined that this action qualifies for categorical exclusion under the National Environmental Policy Act in accordance with FAA Order 1050.1D, Policies and Procedures for Considering Environmental Impacts. This airspace action is not expected to cause any potentially significant environmental impacts, and no extraordinary circumstances exist that warrant preparation of an environmental assessment.

List of Subjects in 14 CFR Part 71

Airspace, Incorporation by reference, Navigation (air).

Adoption of the Amendment

In consideration of the foregoing, the Federal Aviation Administration amends 14 CFR Part 71 as follows:

PART 71—DESIGNATION OF CLASS A, CLASS B, CLASS C, CLASS D, AND CLASS E, AIRSPACE AREAS; AIRWAYS; ROUTES; AND REPORTING POINTS

1. The authority citation for part 71 continues to read as follows:

Authority: 49 U.S.C. 106(g), 40103, 40113, 40120; E.O. 10854, 24 FR 9565, 3 CFR, 1959–1963 Comp., p. 389.

§ 71.1 [Amended]

2. The incorporation by reference in 14 CFR 71.1 of the Federal Aviation Administration Order 7400.9J, Airspace Designations and Reporting Points, dated August 31, 2001, and effective September 16, 2001, is amended as follows:

Paragraph 6010(a) Domestic VOR Federal Airways

* * * * *

V–358 [Revised]

From San Antonio, TX, via Stonewall, TX; Lampasas, TX; INT Lampasas 041° and Waco, TX, 280° radials; Waco; Glen Rose, TX; Millsap, TX; Bowie, TX; Ardmore, OK; INT Ardmore 327° and Will Rogers, OK, 195° radials; to Will Rogers.

* * * * *

Issued in Washington, DC, on September 24, 2001.

Reginald C. Matthews,

Manager, Airspace and Rules Division.

[FR Doc. 01–24427 Filed 10–1–01; 8:45 am]

BILLING CODE 4910–13–U

SECURITIES AND EXCHANGE COMMISSION

17 CFR Parts 230, 239, 270, and 274

[Release Nos. 33–8010; 34–44850; IC–25175; File No. S7–09–00]

RIN 3235–AH77

Disclosure of Mutual Fund After-Tax Returns; Extension of Compliance Date

AGENCY: Securities and Exchange Commission.

ACTION: Final rule; extension of compliance date.

SUMMARY: The Commission is extending the compliance date for amendments to rule 482 under the Securities Act of 1933 and rule 34b–1 under the Investment Company Act of 1940 which require certain funds to include standardized after-tax returns in advertisements and other sales material, and which were published on February 5, 2001 (66 FR 9002).

DATES: *Effective Date:* The effective date of the amendments to Parts 230, 239, 270 and 274 published on February 5, 2001, remains April 16, 2001.

Compliance Dates: The compliance date for the amendments to rule 482 (17 CFR 230.482) under the Securities Act of 1933 and rule 34b–1 (17 CFR 270.34b–1) under the Investment Company Act of 1940 is extended to December 1, 2001. The compliance date for the amendments to Form N–1A (17 CFR 239.15A and 274.11A) remains February 15, 2002.

FOR FURTHER INFORMATION CONTACT: Katy Mobedshahi, Attorney, or Paul G. Cellupica, Assistant Director, (202) 942–0721, Office of Disclosure Regulation, Division of Investment Management, Securities and Exchange Commission, 450 Fifth Street, NW., Washington, DC 20549–0506.

SUPPLEMENTARY INFORMATION: The Commission is extending the compliance date for certain amendments to rule 482 (17 CFR 230.482) under the Securities Act of 1933 and rule 34b–1 (17 CFR 270.34b–1) under the Investment Company Act of 1940, which the Commission adopted on January 18, 2001 (''Rule Amendments'').[1] The Rule Amendments require that fund advertisements and sales literature include standardized after-tax returns if the sales material either (i) includes after-tax performance information; or (ii) includes any performance information together with representations that the fund is managed to limit taxes. The Commission had designated October 1, 2001, as the compliance date for the Rule Amendments.

On September 20, 2001, representatives of four major fund groups requested that the Commission extend the October 1, 2001 compliance date for the Rule Amendments.[2] In their request, these fund groups argued that an extension is necessary to allow funds and third-party providers of performance information to request and obtain clarification from the Commission staff on a number of technical issues about the methodology for calculating after-tax returns, and to program their systems accordingly. The fund groups stated that they only recently became aware of a lack of agreement within the fund industry, as well as with the third-party providers, on several components of the after-tax return calculation. In addition, the fund groups argued that the October 1, 2001 compliance date is particularly problematic for fund supermarkets, which must rely upon third-party providers for the after-tax returns they publish for non-proprietary funds.[3] Because the fund supermarkets' websites are in most cases deemed to be sales literature, the after-tax numbers that they post on their websites must comply with the after-tax return rule by October 1, 2001.

The Commission therefore is extending until December 1, 2001, the compliance date for the Rule Amendments. This extension will give funds and third-party providers sufficient time to resolve outstanding technical issues regarding the appropriate methodology to be used in calculating standardized after-tax returns and perform any necessary systems changes. The extension will also allow third-party providers to collect the historical tax data that they need to compute after-tax returns according to the Commission's rules.

The Commission, for good cause, finds that, based on the reasons cited above, notice and solicitation of comment regarding the extension of the compliance date for the Rule Amendments is impracticable, unnecessary, and contrary to the public interest.[4] The Commission notes that the October 1, 2001 compliance date is imminent, and that a limited extension will give funds and third-party providers sufficient time to seek clarification from the Commission staff about the appropriate methodology to be used in computing after-tax returns and to modify their systems accordingly.

Dated: September 26, 2001.

By the Commission.

Margaret H. McFarland,

Deputy Secretary.

[FR Doc. 01–24542 Filed 10–1–01; 8:45 am]

BILLING CODE 8010–01–U

---

[1] *See* Disclosure of Mutual Fund After-Tax Returns, Securities Act Release No. 7941 (Jan. 18, 2001) (66 FR 9002) (Feb. 5, 2001).

[2] *See* Letter to Paul F. Roye, Director, Division of Investment Management, from Eric Roiter, Sr. Vice President & General Counsel, Fidelity Management & Research Company, on behalf of Henry H. Hopkins, Chief Legal Counsel, T. Rowe Price Associates, Inc.; Marguerite E.H. Morrison, Chief Legal Officer-Mutual Funds, Prudential Financial; and Heidi Stam, Principal, The Vanguard Group, Inc., dated September 20, 2001 (placed in File No. S7–09–00).

[3] A fund supermarket is a program offered by a broker-dealer or other financial institution through which its customers may purchase and redeem a variety of funds from different providers.

[4] *See* section 553(b)(3)(B) of the Administrative Procedure Act (5 U.S.C. 553(b)(3)B)) (an agency may dispense with prior notice and comment when it finds, for good cause, that notice and comment are ''impracticable, unnecessary, or contrary to the public interest'').

SECURITIES AND EXCHANGE COMMISSION

17 CFR Part 240

[Release No. 34–44852; File No. S7–17–00]

RIN 3235–AH96

Firm Quote and Trade-Through Disclosure Rules for Options

AGENCY: Securities and Exchange Commission.

ACTION: Final rule; extension of compliance date.

SUMMARY: The Securities and Exchange Commission (''Commission'') is extending the compliance date for Rule 11Ac1–7 under the Securities Exchange Act of 1934 (''Exchange Act''). Rule 11Ac1–7 requires a broker-dealer to disclose to its customer when the customer's order for listed options is executed at a price inferior to a better published price, unless the transaction was effected on a market that participates in an intermarket linkage plan approved by the Commission. This rule was published on December 1, 2000 (66 FR 75439).

DATES: *Effective Date:* The effective date for Rule 11Ac1–7, published on December 1, 2000 (65 FR 75439), remains February 1, 2001.

Compliance Date: On March 15, 2001, the Commission extended the compliance date for Rule 11Ac1–7 (§ 240.11Ac1–7) from April 1, 2001 to October 1, 2001 (66 FR 15792). The Commission now extends the compliance date from October 1, 2001 to April 1, 2002.

FOR FURTHER INFORMATION CONTACT: Jennifer Colihan, Special Counsel, at (202) 942–0735, Division of Market Regulation, Securities and Exchange Commission, 450 Fifth Street, NW., Washington, DC 20549–1001.

SUPPLEMENTARY INFORMATION: On November 17, 2000, the Commission adopted Rule 11Ac1–7 [1] (''Rule'') under the Exchange Act to require a broker-dealer to disclose to its customer when the customer's order for listed options is executed at a price inferior to a better published quote (''intermarket trade-through''), and to disclose the better published quote available at that time.[2] This disclosure must be made in writing at or before the completion of the transaction, and may be provided in conjunction with the confirmation statement routinely sent to investors. However, a broker-dealer is not required to disclose to its customer an intermarket trade-through if the broker-dealer effects the transaction on an exchange that participates in an approved linkage plan that includes provisions reasonably designed to limit customers' orders from being executed at prices that trade through a better published price. In addition, broker-dealers will not be required to provide the disclosure required by the Rule if the customer's order is executed as part of a block trade.

In the Adopting Release, the Commission noted that it would consider granting exemptive relief to broker-dealers from the disclosure requirements of the Rule if the options exchanges continued to make substantial progress towards implementing a linkage plan.[3] On March 15, 2001, the Commission extended the compliance date from April 1, 2001 to October 1, 2001, noting that while progress had been made toward implementing the linkage plan approved by the Commission in July,[4] the exchanges' efforts had not yet resulted in a linkage that could be implemented before the compliance date of April 1, 2001.

The Commission believes that the options exchanges have continued to make substantial progress on implementing the linkage. Specifically, on March 23, 2001, the options markets selected The Options Clearing Corporation (''The OCC'') as the linkage provider. The OCC has advised the Commission that it expects to have finalized the technical specifications for the linkage by early November 2001. Each of the options exchanges is currently evaluating its internal systems to determine the modifications, development, and testing that will be needed to accommodate the linkage.

In addition, on June 27, 2001, the Commission approved an amendment to the Linkage Plan proposed by the options exchanges that satisfies the minimal requirements of the Trade-Through Disclosure Rule and, once implemented, would except broker-dealers who effect transactions on any of the linked markets from making the required disclosures under the Trade-Through Disclosure Rule.[5] Finally, each of the options exchanges has filed proposed rule changes intended to incorporate the requirements of the Linkage Plan.[6]

Therefore, the Commission finds that good cause exists at this time to extend the compliance date for six months, to April 1, 2002, to allow the options exchanges to make further advancements towards implementing a linkage before imposing the disclosure requirements of the Rule on broker-dealers.

The Commission finds, in accordance with Section 553(b)(3)(A) of the Administrative Procedure Act,[7] that extending the compliance date relates solely to agency organization, procedure, or practice, and does not relate to a substantive rule. Accordingly, notice, opportunity for public comment, and publication prior to the extension are unnecessary.

By the Commission.
Dated: September 26, 2001.

Margaret H. McFarland,

Deputy Secretary.

[FR Doc. 01–24575 Filed 10–1–01; 8:45 am]

BILLING CODE 8010–01–P

[1] 17 CFR 240.11Ac1–7.

[2] *See* Securities Exchange Act Release No. 43591 (November 17, 2000), 65 FR 75439 (December 1, 2000) (''Adopting Release'').

[3] *Id.*

[4] *See* Securities Exchange Act Release No. 43086 (July 28, 2000), 65 FR 48023 (August 4, 2000) (''Linkage Plan'').

[5] *See* Securities Exchange Act Release No. 44482, 66 FR 35470 (July 5, 2001). Specifically, the amendment: (1) Limits participants from trading through, not only the quotes of other linkage plan participants, but also, the quotes of exchanges that are *not* participants in an approved linkage plan; (2) requires plan participants to actively surveil their markets for trades executed at prices inferior to those publicly quoted on other exchanges; and (3) makes clear that the failure of a market with a better quote to complain within a specified period of time that its quote was traded-through may affect potential liability, but does not signify that a trade-through has not occurred.

[6] *See* File Nos. SR-Amex-2001–64; SR-CBOE–2001–46; SR-ISE–2001–23; SR-PCX–2001–30; and SR-Phlx-2001–78.

[7] 5 U.S.C. 553(b)(3)(A).

DEPARTMENT OF THE TREASURY

Customs Service

19 CFR Part 122

[T. D. 01–70]

User Fee Airports

AGENCY: U.S. Customs Service, Department of the Treasury.

ACTION: Final rule.

SUMMARY: This document amends the Customs Regulations to reflect the establishment of one additional user fee airport and the cancellation of another user fee airport. A user fee airport is one which, while not qualifying for designation as an international or landing rights airport, has been approved by the Commissioner of Customs to receive, for a fee, the services of a Customs officer for the processing of aircraft entering the United States and their passengers and cargo.

EFFECTIVE DATE: October 2, 2001.

FOR FURTHER INFORMATION CONTACT: Nancy Bruner, Mission Support, Office of Field Operations, (202) 927–2290.

SUPPLEMENTARY INFORMATION:

Background

Part 122, Customs Regulations (19 CFR part 122), sets forth regulations that are applicable to all international air commerce relating to the entry and clearance of aircraft and the transportation of persons and cargo by aircraft.

Under § 1644a, Title 19, United States Code (19 U.S.C. 1644a), the Secretary of the Treasury is authorized to designate places in the United States as ports of entry for civil aircraft arriving from any place outside of the United States, and for merchandise carried on the aircraft. These airports are referred to as international airports, and the location and name of each are listed in § 122.13, Customs Regulations (19 CFR 122.13). In accordance with § 122.33, Customs Regulations (19 CFR 122.33), the first landing of every civil aircraft entering the United States from a foreign area must be at one of these international airports, unless the aircraft has been specifically exempted from this requirement or permission to land elsewhere has been granted. Customs officers are assigned to all international airports to accept entries of merchandise, collect duties and enforce the customs laws and regulations.

Other than making an emergency or forced landing, if a civil aircraft desires to land at an airport not designated by Customs as an international airport, the pilot may request permission to land at a specific airport and, if granted, Customs assigns personnel to that airport for the aircraft. The airport where the aircraft is permitted to land is called a landing rights airport (19 CFR 122.14).

Section 236 of Public Law 98–573 (the Trade and Tariff Act of 1984), codified at 19 U.S.C. 58b, created an option for civil aircraft desiring to land at an airport other than an international or landing rights airport. A civil aircraft arriving from a place outside of the United States may ask Customs for permission to land at an airport designated by the Secretary of the Treasury as a user fee airport.

Pursuant to 19 U.S.C. 58b, an airport may be designated as a user fee airport if the Secretary of the Treasury determines that the volume of Customs business at the airport is insufficient to justify the availability of Customs services at the airport and the governor of the state in which the airport is located approves the designation. Generally, the type of airport that would seek designation as a user fee airport would be one at which a company, such as an air courier service, has a specialized interest in regularly landing.

As the volume of business anticipated at this type of airport is insufficient to justify its designation as an international or landing rights airport, the availability of Customs services is not paid for out of the Customs appropriations from the general treasury of the United States. Instead, the services of Customs officers are provided on a fully reimbursable basis to be paid for by the user fee airport on behalf of the recipients of the services.

The fees which are to be charged at user fee airports, according to the statute, shall be paid by each person using the Customs services at the airport and shall be in the amount equal to the expenses incurred by the Secretary of the Treasury in providing Customs services which are rendered to such person at such airport, including the salary and expenses of those employed by the Secretary of the Treasury to provide the Customs services. To implement this provision, generally, the airport seeking the designation as a user fee airport of that airport's authority agrees to pay Customs a flat fee annually and the users of the airport are to reimburse that airport/airport authority. The airport/airport authority agrees to set and periodically to review its charges to ensure that they are in accord with the airport's expenses.

Pursuant to Treasury Department Order No. 165, Revised (Treasury Decision 53564), all the rights, privileges, powers and duties vested in the Secretary of the Treasury by the Tariff Act of 1930, as amended, by the navigation laws, or by any other laws administered by Customs, are transferred to the Commissioner of Customs. Accordingly, the authority granted to the Secretary of the Treasury to designate user fee airports and to determine appropriate fees is delegated to the Commissioner of Customs.

Under this authority, Customs has determined that certain conditions must be met before an airport can be designated as a user fee airport. At least one full-time Customs officer must be requested, and the airport must be responsible for providing Customs with satisfactory office space, equipment and supplies, at no cost to the Federal Government.

Thirty-six airports are currently listed in § 122.15, Customs Regulations, as user fee airports. This document revises the list of user fee airports. It adds Edinburg International Airport, in Edinburg, Texas, to this listing of designated user fee airports and removes the Arkansas Aeroplex at Blytheville, Arkansas from the list. These actions are taken pursuant to the airports' request.

Regulatory Flexibility Act and Executive Order 12866

Because no notice of proposed rulemaking is required for this final rule, the provisions of the Regulatory Flexibility Act (5 U.S.C. 601 *et seq.*) do not apply. Agency organization matters such as this amendment are exempt from consideration under Executive Order 12866.

Inapplicability of Public Notice and Delayed Effective Date Requirements

Because this amendment merely updates the list of user fee airports designated by the Commissioner of Customs in accordance with 19 U.S.C. 58b and neither imposes any additional burdens on, nor takes away any existing rights or privileges from, the public, pursuant to 5 U.S.C. 553 (b)(B), notice and public procedure are unnecessary, and for the same reasons, pursuant to 5 U.S.C. 553(d)(3) a delayed effective date is not required.

Drafting Information

The principal author of this document was Janet L. Johnson, Regulations Branch, Office of Regulations and Rulings, U.S. Customs Service. However, personnel from other offices participated in its development.

List of Subjects in 19 CFR Part 122

Air carriers, Aircraft, Airports, Customs duties and inspection, Freight.

Amendments to the Regulations

Part 122, Customs Regulations (19 CFR part 122) is amended as set forth below.

PART 122—AIR COMMERCE REGULATIONS

1. The authority citation for part 122, Customs Regulations, continues to read as follows:

Authority: 5 U.S.C. 301; 19 U.S.C. 58b, 66, 1433, 1436, 1448, 1459, 1590, 1594, 1623, 1624, 1644, 1644a.

§ 122.15 User fee airports.

2. The listing of user fee airports in section 122.15(b) is amended by removing ''Blytheville, Arkansas'' from the ''Location'' column and on the same line ''Arkansas Aeroplex'' from the ''Name'' column; and by adding, in alphabetical order, in the ''Location'' column, ''Edinburg, Texas'' and by

adding on the same line, in the ''Name'' column, ''Edinburg International Airport''.

Charles W. Winwood,

Acting Commissioner of Customs.

Approved: September 26, 2001.

Timothy E. Skud,

Acting Deputy Assistant Secretary of the Treasury.

[FR Doc. 01–24534 Filed 10–1–01; 8:45 am]

BILLING CODE 4820–02–P

DEPARTMENT OF TRANSPORTATION

Coast Guard

33 CFR Part 165

[CGD01–01–164]

RIN 2115–AA97

Safety and Security Zones; Coast Guard Force Protection for Station Jonesport, Jonesport, Maine; Coast Guard Group Southwest Harbor, Southwest Harbor, Maine; and Station Rockland, Rockland Harbor Maine

AGENCY: Coast Guard, DOT.

ACTION: Temporary final rule.

SUMMARY: The Coast Guard is establishing temporary safety and security zones in the waters surrounding Coast Guard facilities located in Jonesport, Maine; Southwest Harbor, Maine; and Rockland, Maine. These security and safety zones are needed to safeguard Coast Guard facilities, vessels and personnel from potential future sabotage or other subversive acts, accidents or other causes of a similar nature. Entry or movement within these zones by any vessel of any description whatsoever, without the express authority of the Captain of the Port, Portland, or his authorized patrol representative, is strictly prohibited.

EFFECTIVE DATE: This section is effective from 6 p.m. September 19, 2001 until March 17, 2002.

ADDRESSES: Documents as indicated in this preamble are available for inspection or copying at Marine Safety Office Portland, Maine, 103 Commercial Street, Portland, Maine between 8 a.m. and 4 p.m., Monday through Friday, except Federal Holidays.

FOR FURTHER INFORMATION CONTACT: Lieutenant (Junior Grade) W. W. Gough, Chief, Ports and Waterways Safety Branch, Port Operations Department, Captain of the Port, Portland, Maine at (207) 780–3251.

SUPPLEMENTARY INFORMATION:

Regulatory History

Pursuant to 5 U.S.C. 553, a notice of proposed rulemaking (NPRM) was not published for this regulation. Good cause exists for not publishing a NPRM and for making this regulation effective in less than 30 days after publication in the **Federal Register**. Due to the catastrophic nature and extent of damage realized from the aircraft crashes into the World Trade Center towers, this rulemaking is urgently necessary to protect the national security interests of the United States against future potential terrorist strikes against governmental targets. Any delay in the establishment and enforcement of this regulation's effective date would be unnecessary and contrary to public interest and national security since immediate action is needed to protect Coast Guard Group Southwest Harbor Base, Southwest Harbor, Maine; Coast Guard Station Jonesport, Jonesport, Maine; and Coast Guard Station Rockland, Rockland Harbor; Maine's facilities, vessels and personnel; as well as the public and maritime community, from potential terrorist attacks. The public will be kept appraised of the safety and security zones and respective changes via Broadcast Notice to Mariners.

Background and Purpose

On September 11, 2001, both towers of the World Trade Center, New York City, New York, were destroyed as a result of two commercial airliner crashes, an act that can only be explained as resulting from terrorist attacks. This regulation establishes three safety and security zones in the waters immediately surrounding the Coast Guard facilities in Southwest Harbor, Rockland, and Jonesport Maine: (1) All the waters off of Station Jonesport, Jonesport, Maine, within a 75-yard radius of 44° 31′ 38″ N, 067°36′ 58″ W; (2) all the waters of Southwest Harbor, Maine off of Coast Guard Base Southwest Harbor, (a) within a 60-yard radius of 44° 16′ 30″ N, 068° 18′ 45″ W; and (b) within a 20-yard radius of 44° 16′ 30″ N, 068° 18′ 47″ W; and (3) all the waters of Rockland Harbor, Maine off of Station Rockport (a) within a 75-yard radius of 44° 06′ 16″ N, 069° 06′ 04″ W; and (b) within a 60-yard radius of 44° 06′ 19″ N, 069° 06′ 07″ W. The safety and security zones have identical boundaries, and restrict entry into or movement within the waters of Southwest Harbor, Jonesport Harbor and Rockland Harbor. The safety and security zones are necessary to protect Coast Guard personnel, facilities, the public and the surrounding area from sabotage or other subversive acts, accidents, or events of a similar nature. All persons other than those approved by the Captain of the Port or his authorized patrol representative are prohibited from entering into or moving within the zones without the prior approval of the Captain of the Port. The public will be notified of the safety and security zones via Broadcast Notice to Mariners.

Regulatory Evaluation

This temporary final rule is not a significant regulatory action under section 3(f) of Executive Order 12866 and does not require an assessment of potential costs and benefits under section 6(a)(3) of that order. The Office of Management and Budget has not reviewed it under that Order. It is not significant under the regulatory policies and procedures of the Department of Transportation (DOT) (44 FR 11040; February 26, 1979). The Coast Guard expects the economic impact of this proposal to be so minimal that a full Regulatory Evaluation under paragraph 10e of the regulatory policies and procedures of DOT is unnecessary for the following reasons: These safety and security zones limit movement within only a portion of Southwest Harbor, Jonesport and Rockland Harbors, allowing vessels to safely navigate around the safety and security zones without delay, and maritime advisories will be made to advise the maritime community of the safety and security zones.

Small Entities

Under the Regulatory Flexibility Act (5 U.S.C. 601 *et seq.*), the Coast Guard must consider whether this proposal will have a significant economic impact on a substantial number of small entities. ''Small entities'' may include (1) small businesses and not-for-profit organizations that are independently owned and operated and are not dominant in their fields and (2) governmental jurisdictions with populations of less than 50,000.

For the reasons addressed under the Regulatory Evaluation above, the Coast Guard expects the impact of this regulation to be minimal and certifies under 5 U.S.C. 605(b) that this final rule will not have a significant economic impact on a substantial number of small entities.

Collection of Information

This rule contains no collection of information requirements under the Paperwork Reduction Act of 1995 (44 U.S.C. 3501 *et seq.*).

Federalism

The Coast Guard has analyzed this rule under the principles and criteria contained in Executive Order 13132 and have determined that this rule does not have sufficient federalism implications for Federalism under that order.

Unfunded Mandates Reform Act

The Unfunded Mandates Reform Act of 1995 (2 U.S.C. 1531–1538) governs the issuance of Federal regulations that require unfunded mandates. An Unfunded Mandate is a regulation that requires a state, local or tribal government or the private sector to incur costs without the Federal government's having first provided the funds to pay those costs. This rule will not impose an Unfunded Mandate.

Taking of Private Property

This rule will not affect a taking of private property or otherwise have taking implications under Executive Order 12630, Governmental Actions and Interference with Constitutionally Protected Property Rights.

Civil Justice Reform

This rule meets applicable standards in section 3(a) and 3(b)(2) of Executive Order 12988, Civil Justice Reform, to minimize litigation, eliminate ambiguity and reduce burden.

Protection of Children

The Coast Guard has analyzed this rule under Executive Order 13045, Protection of Children from Environmental Health Risks and Safety Risks. This rule is not an economically significant rule and does not concern an environmental risk to health or risk to safety that may disproportionately affect children.

Indian Tribal Governments

This rule does not have tribal implications under Executive Order 13175, Consultation and Coordination with Indian Tribal Governments. A rule with tribal implications has a substantial direct effect on one or more Indian tribe, on the relationship between the Federal Government and Indian tribes, or on the distribution of power and responsibilities between the Federal Government and Indian tribes.

Environment

The Coast Guard has considered the environmental impact of this regulation and concluded that, under Figure 2–1, paragraph 34(g) of Commandant Instruction M16475.1D, this rule is categorically excluded from further environmental documentation.

Energy Effects

The Coast Guard has analyzed this rule under Executive Order 13211, Actions Concerning Regulations That Significantly Affect Energy Supply, Distribution, or Use. We have determined that it is not a ''significant energy action'' under that order because it is not a ''significant regulatory action'' under Executive Order 12866 and is not likely to have a significant adverse effect on the supply, distribution, or use of energy. It has not been designated by the Administrator of the Office of Information and Regulatory Affairs as a significant energy action. Therefore, it does not require a Statement of Energy Effects under Executive Order 13211.

List of Subjects in 33 CFR Part 165

Harbors, Marine safety, Navigation (water), Reporting and recordkeeping requirements, Security measures, Waterways.

Regulation

For the reasons set out in the preamble, the Coast Guard amends 33 CFR part 165 as follows:

1. The authority citation for part 165 continues to read as follows:

Authority: 33 U.S.C. 1231; 50 U.S.C. 191; 33 CFR 1.05–1(g), 6.04–1, 6.04–6, 160.5; 49 CFR 1.46.

2. Add temporary § 165.T01–164 to read as follows:

§ 165.T01–164 Coast Guard Force Protection for Coast Guard Group Southwest Harbor, Maine, Station Jonesport, Maine and Station Rockland, Maine.

(a) *Location.* The following are safety and security zones: (1) All the waters off of Station Jonesport, Jonesport, Maine, within a 75-yard radius of 44° 31′ 38″ N, 067°36′ 58″ W; (2) all the waters of Southwest Harbor, Maine off of Coast Guard Base Southwest Harbor, (i) within a 60-yard radius of 44° 16′ 30″ N, 068° 18′ 45″ W; and (ii) within a 20-yard radius of 44° 16′ 30″ N, 068° 18′ 47″ W; and (3) all the waters of Rockland Harbor, Maine off of Station Rockport (i) within a 75-yard radius of 44° 06′ 16″ N, 069°06′ 04″ W; and (ii) within a 60-yard radius of 44° 06′ 19″ N, 069°06′ 07″ W.

(b) *Effective date.* This section is effective from 6 p.m. September 19, 2001 until March 17, 2002.

(c) *Regulations.* (1) In accordance with the general regulations in §§ 165.23 and 165.33 of this part, entry into or movement within this zone is prohibited unless previously authorized by the Captain of the Port Portland.

(2) All persons and vessels shall comply with the instructions of the Captain of the Port or the designated on-scene U.S. Coast Guard patrol personnel. On-scene Coast Guard patrol personnel include commissioned, warrant, and petty officers of the Coast Guard on board Coast Guard, Coast Guard Auxiliary, local, state, and federal law enforcement vessels. Emergency response vessels are authorized to move within the zone, but must abide by restrictions imposed by the Captain of the Port.

(3) No person may swim upon or below the surface of the water within the boundaries of the safety and security zones unless previously authorized by the Captain of the Port, Portland or his authorized patrol representative.

Dated: September 19, 2001.

M. P. O'Malley,

Commander, U.S. Coast Guard, Captain of the Port.

[FR Doc. 01–24538 Filed 10–1–01; 8:45 am]

BILLING CODE 4910–15–U

DEPARTMENT OF TRANSPORTATION

Coast Guard

33 CFR Part 165

[CGD01–01–175]

RIN 2115–AA97

Safety and Security Zones; Naval Force Protection, Bath Iron Works, Kennebec River, Bath, Maine

AGENCY: Coast Guard, DOT.

ACTION: Temporary final rule.

SUMMARY: The Coast Guard establishes temporary safety and security zones in the waters of the Kennebec River extending out to 400-feet into the Kennebec River from the Bath Iron Works facility, Bath, Maine. This action is necessary to ensure public safety and prevent sabotage or terrorist acts. Entry into these safety and security zones is prohibited unless authorized by the Captain of the Port.

DATES: This section is effective from 12:01 a.m. September 21, 2001 to 11:59 p.m. December 31, 2001.

ADDRESSES: Documents as indicated in this preamble are available for inspection or copying at Marine Safety Office Portland, Maine, 103 Commercial Street, Portland, Maine between 8 a.m. and 4 p.m., Monday through Friday, except Federal Holidays.

FOR FURTHER INFORMATION CONTACT: Lieutenant (Junior Grade) W. W. Gough, Chief, Ports and Waterways Safety Branch, Port Operations Department, Captain of the Port, Portland, Maine at (207) 780–3251.

SUPPLEMENTARY INFORMATION:

Regulatory History

As authorized by 5 U.S.C. 553, a notice of proposed rulemaking (NPRM) was not published for this regulation. Under 5 U.S.C 553(b)(B), the Coast Guard finds that good cause exists for not publishing a NPRM and for making this rule effective less than 30 days after publication in the **Federal Register**. Due to the catastrophic nature and extent of damage realized from the aircraft crashes into the World Trade Center towers, this rulemaking is urgently necessary to protect the national security interests of the United States against future potential terrorist strikes against governmental targets. Any delay in the establishment and enforcement of this regulation's effective date would be unnecessary and contrary to public interest and national security since immediate action is needed to protect the United States Naval vessels being built and repaired at the Bath facility. Any delay in implementing this regulation would be contrary to the public interest since immediate action is needed to safeguard the Naval vessels moored at the Bath Iron Works, Naval personnel, the maritime community and the public from sabotage or other subversive acts, accidents, or other causes of a similar nature.

Background and Purpose

A safety zone was established by the Captain of the Port, Portland, Maine, on June 15, 2001, and published in the **Federal Register** (66 FR 34367–34369). That safety zone prohibited entry into all waters of the Kennebec River within a 400-foot radius of Bath Iron Works, Bath, Maine from 7 a.m. June 16, 2001 through 12 p.m. September 30, 2001. On September 11, 2001, two commercial aircraft were hijacked from Logan Airport in Boston, Massachusetts and flown into the World Trade Center in New York, New York inflicting catastrophic human casualties and property damage. A similar attack was conducted on the Pentagon on the same day. National security and intelligence officials warn that future terrorist attacks against civilian targets may be anticipated. Due to these heightened security concerns, safety and security zones are prudent for an additional period of time, and for a larger area than previously covered. The safety and security zones will occur from 12:01 a.m. September 21, 2001 to 11:59 p.m. December 31, 2001 at Bath Iron Works, Bath, Maine. This regulation establishes safety and security zones having identical boundaries in the waters of the Kennebec River extending out to 400 feet from Bath Iron Works facility. This safety and security zone is required to protect the Naval personnel, facilities, the public and the surrounding area from sabotage, terrorism, subversive acts, accidents, or other events of a similar nature.

Regulatory Evaluation

This temporary final rule is not a significant regulatory action under section 3(f) of Executive Order 12866 and does not require an assessment of potential costs and benefits under section 6(a)(3) of that order. The Office of Management and Budget has not reviewed it under that Order. It is not significant under the regulatory policies and procedures of the Department of Transportation (DOT) (44 FR 11040; February 26, 1979). The Coast Guard expects the economic impact of this proposal to be so minimal that a full Regulatory Evaluation under paragraph 10e of the regulatory policies and procedures of DOT is unnecessary for the following reasons: this safety and security zone involves only a portion of the Kennebec River, allowing vessels to safely navigate around the safety and security zone without delay.

Small Entities

Under the Regulatory Flexibility Act (5 U.S.C. 601 *et seq.*), the Coast Guard must consider whether this proposal will have a significant economic impact on a substantial number of small entities. ''Small entities'' may include (1) small businesses and not-for-profit organizations that are independently owned and operated and are not dominant in their fields and (2) governmental jurisdictions with populations of less than 50,000.

For the reasons addressed under the Regulatory Evaluation above, the Coast Guard expects the impact of this regulation to be minimal and certifies under section 605(b) of the Regulatory Flexibility Act (5 U.S.C. 601 *et seq.*) that this final rule will not have a significant economic impact on a substantial number of small entities.

Collection of Information

This rule contains no collection of information requirements under the Paperwork Reduction Act of 1995 (44 U.S.C. 3501 *et seq.*).

Federalism

The Coast Guard has analyzed this rule under the principles and criteria contained in Executive Order 13132 and have determined that this rule does not have sufficient federalism implications for Federalism under that order.

Unfunded Mandates Reform Act

The Unfunded Mandates Reform Act of 1995 (2 U.S.C. 1531–1538) governs the issuance of Federal regulations that require unfunded mandates. An Unfunded Mandate is a regulation that requires a state, local or tribal government or the private sector to incur costs without the Federal government's having first provided the funds to pay those costs. This rule will not impose an Unfunded Mandate.

Taking of Private Property

This rule will not affect a taking of private property or otherwise have taking implications under Executive Order 12630, Governmental Actions and Interference with Constitutionally Protected Property Rights.

Civil Justice Reform

This rule meets applicable standards in section 3(a) and 3(b)(2) of Executive Order 12988, Civil Justice Reform, to minimize litigation, eliminate ambiguity and reduce burden.

Protection of Children

The Coast Guard has analyzed this rule under Executive Order 13045, Protection of Children from Environmental Health Risks and Safety Risks. This rule is not an economically significant rule and does not concern an environmental risk to health or risk to safety that may disproportionately affect children.

Indian Tribal Governments

This rule does not have tribal implications under Executive Order 13175, Consultation and Coordination with Indian Tribal Governments. A rule with tribal implications has a substantial direct effect on one or more Indian tribe, on the relationship between the Federal Government and Indian tribes, or on the distribution of power and responsibilities between the Federal Government and Indian tribes.

Environment

The Coast Guard has considered the environmental impact of this regulation and concluded that, under Figure 2–1, paragraph 34(g) of Commandant Instruction M16475.1D, this rule is categorically excluded from further environmental documentation.

Energy Effects

The Coast Guard has analyzed this rule under Executive Order 13211, Actions Concerning Regulations That Significantly Affect Energy Supply, Distribution, or Use. We have determined that it is not a ''significant energy action'' under that order because

it is not a ''significant regulatory action'' under Executive Order 12866 and is not likely to have a significant adverse effect on the supply, distribution, or use of energy. It has not been designated by the Administrator of the Office of Information and Regulatory Affairs as a significant energy action. Therefore, it does not require a Statement of Energy Effects under Executive Order 13211.

List of Subjects in 33 CFR Part 165

Harbors, Marine safety, Navigation (water), Reporting and recordkeeping requirements, Security measures, Waterways.

Regulation

For the reasons set out in the preamble, the Coast Guard amends 33 CFR part 165 as follows:

1. The authority citation for part 165 continues to read as follows:

Authority: 33 U.S.C. 1231; 50 U.S.C. 191, 33 CFR 1.05–1(g), 6.04–1, 6.04–6, 160.5; 49 CFR 1.46.

2. Add temporary § 165.T01–175 to read as follows:

§ 165.T01–175 Naval Force Protection, at Bath Iron Works, Kennebec River, Bath, Maine.

(a) *Location.* The following is a safety and security zone: all waters off of Bath Iron Works facility, Bath, Maine extending 400-feet out into the Kennebec River.

(b) *Effective date.* This section is effective from 12:01 a.m. September 21, 2001 to 11:59 p.m. December 31, 2001.

(c) *Regulations.* (1) The general regulations contained in § 165.23, § 165.33 and the regulations specifically relating to safety zones and security zones in §§ 165.20 and 165.30 of this part apply.

(2) All persons and vessels shall comply with the instructions of the Coast Guard Captain of the Port or the designated on scene personnel. Upon being hailed by designated personnel via siren, radio, flashing light, bullhorn or other means, the operator of the vessel shall proceed as directed.

(3) No person may swim upon or below the surface of the water within the boundaries of the safety and security zone unless previously authorized by the Captain of the Port, Portland or his authorized patrol representative.

Dated: September 21, 2001.

M.P. O'Malley,

Commander, Coast Guard, Captain of the Port.

[FR Doc. 01–24536 Filed 10–1–01; 8:45 am]

BILLING CODE 4910–15–U

DEPARTMENT OF TRANSPORTATION

Coast Guard

33 CFR Part 165

[CCGD08–01–036]

RIN 2115–AA97

Security Zone; DOD Barge Flotilla, Cumberland City, TN to Alexandria, LA

AGENCY: Coast Guard, DOT.

ACTION: Temporary final rule.

SUMMARY: The Coast Guard is establishing a temporary security zone around a barge flotilla carrying military equipment on the waters of the Cumberland River, the Ohio River, the Lower Mississippi River, and the Red River. The United States Army is shipping military equipment on board a barge flotilla, requiring a 100-yard security perimeter commencing in Cumberland City, TN on and securing upon offloading of cargo at Alexandria, LA. This zone is needed to safeguard the shipment from sabotage or other subversive acts in light of recent terrorist activity in the United States. Navigation within this zone will be prohibited unless specifically authorized by the Eighth Coast Guard District Commander's on-scene representative.

DATES: This rule is effective from 6 p.m. (CDT) September 20, 2001 until 11:59 p.m. (CDT) on September 30, 2001.

ADDRESSES: Comments and material received from the public, as well as documents indicated in this preamble as being available in the docket, are part of docket CGD08–01–036 and are available for inspection or copying at Commander Eighth Coast Guard District (m), Hale Boggs Federal Bldg., 501 Magazine Street, New Orleans, LA 70130, between 7:30 a.m. and 4 p.m., Monday through Friday, except Federal holidays.

FOR FURTHER INFORMATION CONTACT: LT Karrie C. Trebbe, Eighth Coast Guard District Marine Safety Division, Hale Boggs Federal Bldg., 501 Magazine Street, New Orleans LA 70130, 504–589–6271.

SUPPLEMENTARY INFORMATION:

Regulatory Information

We did not publish a notice of proposed rulemaking (NPRM) for this regulation. Under 5 U.S.C. 553(b)(B), the Coast Guard finds that good cause exists for not publishing a NPRM. Publishing an NPRM and delaying its effective date would be contrary to public interest since immediate action is needed to protect military assets.

Under 5 U.S.C. 553(d)(3), the Coast Guard finds that good cause exists for making this rule effective less than 30 days after publication in the **Federal Register**. Due to security reasons and complex planning and coordination requirements, the Coast Guard was not able to obtain details of the event thirty days prior to its occurrence.

Background and Purpose

The Coast Guard is establishing a security zone with a 100-yard security perimeter around an Army barge flotilla on the waters of the Cumberland River from mile 108.5 to 0.0, the Ohio River mile 923.0 to 981.0, the Lower Mississippi River mile 953.5 to 310.5, and the Red River mile 00.0 to 85.0. The United States Army is shipping military equipment onboard the barge flotilla commencing in Cumberland City, TN at 6 p.m. on September 20, 2001 and securing upon offloading at Alexandria, LA. The zone will be in effect during the flotilla's entire transit and while the flotilla is moored at Alexandria, LA with cargo on deck. This zone is needed to safeguard the Army shipment from sabotage or other subversive acts, accidents, or other causes of a similar nature. The protection of this Army shipment is a matter of national security. Therefore, the Coast Guard has determined it is necessary to prevent access into this zone in order to ensure this equipment safely reaches its destination. Entry into this zone will be prohibited unless authorized by the Eighth Guard District Commander's on-scene representative. The on-scene representative will be located on a Coast Guard vessel accompanying the flotilla and may be contacted on VHF channel 13 or 16.

Regulatory Evaluation

This rule is not a ''significant regulatory action'' under section 3(f) of Executive Order 12866, Regulatory Planning and Review, and does not require an assessment of potential costs and benefits under section 6(a)(3) of that Order. The Office of Management and Budget has not reviewed it under that Order. It is not ''significant'' under the regulatory policies and procedures of the Department of Transportation (DOT) (44 FR 11040, February 26, 1979).

The Coast Guard expects the economic impact of this rule to be so minimal that a full regulatory evaluation is unnecessary. This regulation will only be in effect for a short period of time. The impacts on routine navigation are expected to be minimal.

Small Entities

Under the Regulatory Flexibility Act (5 U.S.C. 601–612), we have considered whether this rule would have a significant economic impact on a substantial number of small entities. The term ''small entities'' comprises small businesses, not-for-profit organizations that are independently owned and operated and are not dominant in their fields, and governmental jurisdictions with populations of less than 50,000.

The Coast Guard certifies under 5 U.S.C. 605(b) that this rule will not have a significant economic impact on a substantial number of small entities. The impact on small entities is expected to be minimal, as only short delays to vessel traffic will occur when the shipment meets other vessels along its route.

Assistance for Small Entities

Under section 213(a) of the Small Business Regulatory Enforcement Fairness Act of 1996 (Pub. L. 104–121), we offered to assist small entities in understanding the rule so that they could better evaluate its effects on them and participate in the rulemaking process.

Small businesses may send comments on the actions of Federal employees who enforce, or otherwise determine compliance with, Federal regulations to the Small Business and Agriculture Regulatory Enforcement Ombudsman and the Regional Small Business Regulatory Fairness Boards. The Ombudsman evaluates these actions annually and rates each agency's responsiveness to small business. If you wish to comment on actions by employees of the Coast Guard, call 1–888–REG–FAIR (1–888–734–3247).

Collection of Information

This rule calls for no new collection of information under the Paperwork Reduction Act of 1995 (44 U.S.C. 3501–3520).

Federalism

A rule has implications for federalism under Executive Order 13132, Federalism, if it has a substantial direct effect on State or local governments and would either preempt State law or impose a substantial direct cost of compliance on them. We have analyzed this rule under that Order and have determined that it does not have implications for federalism.

Unfunded Mandates Reform Act

The Unfunded Mandates Reform Act of 1995 (2 U.S.C. 1531–1538) requires Federal agencies to assess the effects of their discretionary regulatory actions. In particular, the Act addresses actions that may result in the expenditure by a State, local, or tribal government, in the aggregate, or by the private sector of $100,000,000 or more in any one year. Though this rule will not result in such an expenditure, we do discuss the effects of this rule elsewhere in this preamble.

Taking of Private Property

This rule will not effect a taking of private property or otherwise have taking implications under Executive Order 12630, Governmental Actions and Interference with Constitutionally Protected Property Rights.

Civil Justice Reform

This rule meets applicable standards in sections 3(a) and 3(b)(2) of Executive Order 12988, Civil Justice Reform, to minimize litigation, eliminate ambiguity, and reduce burden.

Protection of Children

We have analyzed this rule under Executive Order 13045, Protection of Children from Environmental Health Risks and Safety Risks. This rule is not an economically significant rule and does not create an environmental risk to health or risk to safety that may disproportionately affect children.

Indian Tribal Governments

This rule does not have tribal implications under Executive Order 13175, Consultation and Coordination with Indian Tribal Governments, because it does not have a substantial direct effect on one or more Indian tribes, on the relationship between the Federal Government and Indian tribes, or on the distribution of power and responsibilities between the Federal Government and Indian tribes.

Energy Effect

We have analyzed this rule under Executive Order 13211, Actions Concerning Regulations That Significantly Affect Energy Supply, Distribution, or Use. We have determined that it is not a ''significant energy action'' under that order because it is not a ''significant regulatory action'' under Executive Order 12866 and is not likely to have a significant adverse effect on the supply, distribution, or use of energy. It has not been designated by the Administrator of the Office of Information and Regulatory Affairs as a significant energy action. Therefore, it does not require a Statement of Energy Effects under Executive Order 13211.

Environment

We have considered the environmental impact of this rule and concluded that under figure 2–1, paragraph 34(g), of Commandant Instruction M16475.1D, this rule is categorically excluded from further environmental documentation. A ''Categorical Exclusion Determination'' is available for inspection or copying where indicated under **ADDRESSES.**

List of Subjects in 33 CFR Part 165

Harbors, Marine safety, Navigation (water), Reporting and recordkeeping requirements, Security measures, Waterways.

For the reasons discussed in the preamble, the Coast Guard amends 33 CFR part 165 as follows:

PART 165—REGULATED NAVIGATION AREAS AND LIMITED ACCESS AREAS

1. The authority citation for part 165 continues to read as follows:

Authority: 33 U.S.C. 1231; 50 U.S.C. 191, 33 CFR 1.05–1(g), 6.04–1, 6.04–6, 160.5; 49 CFR 1.46.

2. A new § 165.T08–036 is added to read as follows:

§ 165.T08–036 Security Zone; Fort Campbell—DOD Barge Flotilla, Cumberland City, TN to Alexandria, LA.

(a) *Location.* The following area is a security zone: the waters 100 yards around the Army barge flotilla while in transit on the Cumberland River from mile 108.5 to 0.0, the Ohio River from mile 923.0 to 981.0, the Lower Mississippi River from mile 953.5 to 310.5, and the Red River from mile 00.0 to 85.0. The security zone remains in effect while the flotilla is moored in Alexandria, LA with cargo on deck.

(b) *Effective date.* This section is effective from 6 p.m. September 20, 2001 to 11:59 p.m. on September 30, 2001.

(c) *Regulations.*

(1) In accordance with the general regulations in § 165.33 of this part, entry within 100 yards of the Army flotilla is prohibited unless authorized by the Eighth Coast Guard District Commander's on-scene representative.

(2) No vessels may enter this security zone unless specifically authorized by the Eighth Coast Guard District Commander's on-scene representative. Vessels shall contact the on-scene representative on channel 13 or 16 for closure information and passing instructions. The Eighth Coast Guard District Commander will notify the public of changes in the status of this zone by Marine Radio Safety Broadcast on VHF Marine Band Radio, Channel 22 (157.1 MHz).

Dated: September 20, 2001.

R.J. Casto,

Rear Admiral, U. S. Coast Guard, Commander, Eighth Coast Guard District.

[FR Doc. 01–24535 Filed 10–1–01; 8:45 am]

BILLING CODE 4910–15–U

ENVIRONMENTAL PROTECTION AGENCY

40 CFR Parts 60, 61, and 63

[FRL–7071–5]

Standards of Performance for New Stationary Sources (NSPS) and National Emission Standards for Hazardous Air Pollutants (NESHAPS); Delegation of Authority to the States of Iowa; Kansas; Missouri; Nebraska; Lincoln-Lancaster County, Nebraska; and City of Omaha, NE

AGENCY: Environmental Protection Agency (EPA).

ACTION: Notice of delegation of authority.

SUMMARY: The states of Iowa, Kansas, Missouri, Nebraska, and the local agencies of Lincoln-Lancaster County, Nebraska, and city of Omaha, Nebraska, have submitted updated regulations for delegation of the EPA authority for implementation and enforcement of NSPS and NESHAPS. The submissions cover new EPA standards and, in some instances, revisions to standards previously delegated. EPA's review of the pertinent regulations shows that they contain adequate and effective procedures for the implementation and enforcement of these Federal standards. This action informs the public of delegations to the above-mentioned agencies.

DATES: This rule is effective on November 1, 2001. The dates of delegation can be found in the **SUPPLEMENTARY INFORMATION** section of this document.

ADDRESSES: Copies of the documents relevant to this action are available for public inspection during normal business hours at the Environmental Protection Agency, Air Planning and Development Branch, 901 North 5th Street, Kansas City, Kansas 66101.

Effective immediately, all notifications, applications, reports, and other correspondence required pursuant to the newly delegated standards and revisions identified in this notice should be submitted to the Region 7 office, and, with respect to sources located in the jurisdictions identified in this notice, to the following addresses:

Iowa Department of Natural Resources, Air Quality Bureau, 7900 Hickman Road, Urbandale, Iowa 50322.

Kansas Department of Health and Environment, Bureau of Air and Radiation, 1000 SW Jackson, Suite 310, Topeka, Kansas 66612–1366.

Missouri Department of Natural Resources, Air Pollution Control Program, Jefferson State Office Building, P.O. Box 176, Jefferson City, Missouri 65102.

Nebraska Department of Environmental Quality, Air and Waste Management Division, P.O. Box 98922, Statehouse Station, Lincoln, Nebraska 68509.

Lincoln-Lancaster County Air Pollution Control Agency, Division of Environmental Health, 3140 ''N'' Street, Lincoln, Nebraska 68510.

City of Omaha, Public Works Department, Air Quality Control Division, 5600 South 10th Street, Omaha, Nebraska 68510.

FOR FURTHER INFORMATION CONTACT: Wayne Kaiser, Environmental Protection Agency, Air Planning and Development Branch, 901 North 5th Street, Kansas City, Kansas 66101, (913) 551–7603.

SUPPLEMENTARY INFORMATION: The supplementary information is organized in the following order:

What does this notice do?
What is the authority for delegation?
What does delegation accomplish?
What is being delegated?
What is not being delegated?

List of Delegation Tables

Table I—NSPS, 40 CFR part 60
Table II—NESHAPS, 40 CFR part 61
Table III—NESHAPS, 40 CFR part 63

What Does This Notice Do?

EPA is providing notice that it is delegating authority for implementation and enforcement of the Federal standards shown in the tables below to the state and local air agencies in Region 7. This notice updates the delegation tables most recently published at 65 FR 20754 (April 18, 2000).

Section 553(b)(B) of the Administrative Procedures Act (APA) provides that an agency may forgo notice-and-comment rulemaking upon determination of ''good cause'' published with the rule. EPA considers these updates to be minor changes which are not subject to notice-and-comment rulemaking procedures under the APA or any other statute.

What Is the Authority for Delegation?

1. Section 111(c)(1) of the Clean Air Act (CAA) authorizes EPA to delegate authority to any state agency which submits adequate regulatory procedures for implementation and enforcement of the NSPS program. The NSPS standards are codified at 40 CFR part 60.

2. Section 112(l) of the CAA and 40 CFR part 63, subpart E, authorizes EPA to delegate authority to any state or local agency which submits adequate regulatory procedures for implementation and enforcement of emission standards for hazardous air pollutants. The hazardous air pollutant standards are codified at 40 CFR parts 61 and 63, respectively.

What Does Delegation Accomplish?

Delegation confers primary responsibility for implementation and enforcement of the listed standards to the respective state and local air agencies. However, EPA also retains the authority to enforce the standards if it so desires.

What Is Being Delegated?

Tables I, II, and III below list the delegated standards. The first date in each block is the reference date to the CFR contained in the state rule. In general, the state has adopted the applicable standard through this date as noted in the table. The second date is the most recent effective date of the state agency rule for which EPA is providing or updating the delegation.

What Is Not Being Delegated?

1. EPA regulations effective after the first date specified in each block have not been delegated, and authority for implementation of these regulations is retained solely by EPA.

2. In some cases, the standards themselves specify that specific provisions cannot be delegated. You should review the standard for this information.

3. In some cases, the agency rules do not adopt the Federal standard in its entirety. Each agency rule (available from the respective agency) should be consulted for specific information.

4. In some cases, existing delegation agreements between EPA and the agencies limit the scope of the delegated standards. Copies of delegation agreements are available from the state agencies, or from this office.

5. With respect to 40 CFR part 63, subpart A, General Provisions (see Table III), EPA has determined that sections 63.6(g), 63.6(h)(9), 63.7(e)(2)(ii) and (f), 63.8(f), and 63.10(f) cannot be delegated. Additional information is contained in an EPA memorandum titled ''Delegation of 40 CFR Part 63 General Provisions Authorities to State and Local Air Pollution Control Agencies' from John Seitz, Director, Office of Air Quality

Planning and Standards, dated July 10, 1998.

List of Delegation Tables

TABLE I.—DELEGATION OF AUTHORITY—PART 60 NSPS—REGION 7

Sub-part	Source category	State of Iowa	State of Kansas	State of Missouri	State of Nebraska
A	General Provisions	11/24/98 12/23/98	07/01/98 06/11/99	12/31/99 12/30/00	07/01/97 12/15/98
D	Fossil-Fuel Fired Steam Generators for Which Construction is Commenced After August 17, 1971.	11/24/98 12/23/98	07/01/98 06/11/99	12/31/99 12/30/00	07/01/97 12/15/98
Da	Electric Utility Steam Generating Units for Which Construction is Commenced After September 18, 1978.	11/24/98 12/31/99	07/01/98 06/11/99	12/31/99 12/30/00	07/01/97 12/15/98
Db	Industrial-Commercial Institutional Steam Generating Units	11/24/98 12/23/98	07/01/98 06/11/99	12/31/99 12/30/00	07/01/97 12/15/98
Dc	Small Industrial-Commercial-Institutional Steam Generating Units	11/24/98 12/23/98	07/01/98 06/11/99	12/31/99 12/30/00	07/01/97 12/15/98
E	Incinerators	11/24/98 12/23/98	07/01/98 06/11/99	12/31/99 12/30/00	07/01/97 12/15/98
Ea	Municipal Waste Combustors Constructed after December 20, 1989, and on or before September 20 1994..	11/24/98 12/23/98	07/01/98 06/11/99	12/31/99 12/30/00	07/01/97 12/15/98
Eb	Municipal Waste Combustors for Which Construction is Commenced after September 20, 1994.	11/24/98 12/23/98	07/01/98 06/11/99	12/31/99 12/30/00	07/01/97 12/15/98
Ec	Hospital/medical/infectious Waste Incinerators for Which Construction Commenced after June 20, 1996.	11/24/98 12/23/98	07/01/98 06/11/99	12/31/99 12/30/00	09/15/97 12/15/98
F	Portland Cement Plants	11/24/98 12/23/98	07/01/98 06/11/99	12/31/99 12/30/00	07/01/97 12/15/98
G	Nitric Acid Plants	11/24/98 12/23/98	07/01/98 06/11/99	12/31/99 12/30/00	07/01/97 12/15/98
H	Sulfuric Acid Plants	11/24/98 12/23/98	07/01/98 06/11/99	12/31/99 12/30/00	07/01/97 12/15/98
I	Asphaltic Concrete Plants	11/24/98 12/23/98	07/01/98 06/11/99	12/31/99 12/30/00	07/01/97 12/15/98
J	Petroleum Refineries	11/24/98 12/23/98	07/01/98 06/11/99	12/31/99 12/30/00	07/01/97 12/15/98
K	Storage Vessels for Petroleum Liquid for Which Construction, Reconstruction, or Modification Commenced After June 11, 1973, and Prior to May 19, 1978.	11/24/98 12/23/98	07/01/98 06/11/99	12/31/99 12/30/00	07/01/97 12/15/98
Ka	Storage Vessels for Petroleum Liquid for Which Construction, Reconstruction, or Modification Commenced After May 18, 1978, and Prior to July 23, 1984.	11/24/98 12/23/98	07/01/98 06/11/99	12/31/99 12/30/00	07/01/97 12/15/98
Kb	Volatile Organic Liquid Storage Vessels for Which Construction, Reconstruction, or Modification Commenced After July 23, 1984.	11/24/98 12/23/98	07/01/98 06/11/99	12/31/99 12/30/00	07/01/97 12/15/98
L	Secondary Lead Smelters	11/24/98 12/23/98	07/01/98 06/11/99	12/31/99 12/30/00	07/01/97 12/15/98
M	Brass & Bronze Production Plants	11/24/98 12/23/98	07/01/98 06/11/99	12/31/99 12/30/00	07/01/97 12/15/98
N	Basic Oxygen Process Furnaces for Which Construction is Commenced After June 11, 1973.	11/24/98 12/23/98	07/01/98 06/11/99	12/31/99 12/30/00	07/01/97 12/15/98
Na	Basic Oxygen Process Steelmaking Facilities for Which Construction is Commenced After January 20, 1983.	11/24/98 12/23/98	07/01/98 06/11/99	12/31/99 12/30/00	07/01/97 12/15/98
O	Sewage Treatment Plants	11/24/98 12/23/98	07/01/98 06/11/99	12/31/99 12/30/00	07/01/97 12/15/98
P	Primary Copper Smelters	11/24/98 12/23/98	07/01/98 06/11/99	12/31/99 12/30/00	07/01/97 12/15/98
Q	Primary Zinc Smelters	11/24/98 12/23/98	07/01/98 06/11/99	12/31/99 12/30/00	07/01/97 12/15/98
R	Primary Lead Smelters	11/24/98 12/23/98	07/01/98 06/11/99	12/31/99 12/30/00	07/01/97 12/15/98
S	Primary Aluminum Reduction Plants	11/24/98 12/23/98	07/01/98 06/11/99	12/31/99 12/30/00	07/01/97 12/15/98
T	Wet Process Phosphoric Acid Plants	11/24/98 12/23/98	07/01/98 06/11/99	12/31/99 12/30/00	07/01/97 12/15/98
U	Superphosphoric Acid Plants	11/24/98 12/23/98	07/01/98 06/11/99	12/31/99 12/30/00	07/01/97 12/15/98
V	Diammonium Phosphate Plants	11/24/98 12/23/98	07/01/98 06/11/99	12/31/99 12/30/00	07/01/97 12/15/98
W	Triple Superphosphate Plants	11/24/98 12/23/98	07/01/98 06/11/99	12/31/99 12/30/00	07/01/97 12/15/98
X	Granular Triple Superphosphate Storage Facilities	11/24/98 12/23/98	06/11/99 07/01/98	12/30/00 12/31/99	07/01/97 12/15/98

TABLE I.—DELEGATION OF AUTHORITY—PART 60 NSPS—REGION 7—Continued

Sub-part	Source category	State of Iowa	State of Kansas	State of Missouri	State of Nebraska
Y	Coal Preparation Plants	11/24/98 12/23/98	07/01/98 06/11/99	12/31/99 12/30/00	07/01/97 12/15/98
Z	Ferroalloy Production Facilities	11/24/98 12/23/98	07/01/98 06/11/99	12/31/99 12/30/00	07/01/97 12/15/98
AA	Steel Plant Electric Arc Furnaces Constructed After October 21, 1974, and on or Before August 17, 1983.	11/24/98 12/23/98	07/01/98 06/11/99	12/31/99 12/30/00	07/01/97 12/15/98
AAa	Steel Plant Electric Arc Furnaces & Argon-Oxygen Decarburization Vessels Constructed After August 7, 1983.	11/24/98 12/23/98	07/01/98 06/11/99	12/31/99 12/30/00	07/01/97 12/15/98
BB	Kraft Pulp Mills	11/24/98 12/23/98	07/01/98 06/11/99	12/31/99 12/30/00	.....
CC	Glass Manufacturing Plants	11/24/98 12/23/98	07/01/98 06/11/99	12/31/99 12/30/00	07/01/97 12/15/98
DD	Grain Elevators	11/24/98 12/23/98	07/01/98 06/11/99	12/31/99 12/30/00	07/01/97 12/15/98
EE	Surface Coating of Metal Furniture	11/24/98 12/23/98	07/01/98 06/11/99	12/31/99 12/30/00	07/01/97 12/15/98
GG	Stationary Gas Turbines	11/24/98 12/23/98	07/01/98 06/11/99	12/31/99 12/30/00	07/01/97 12/15/98
HH	Lime Manufacturing Plants	11/24/98 12/23/98	07/01/98 06/11/99	12/31/99 12/30/00	07/01/97 12/15/98
KK	Lead-Acid Battery Manufacturing Plants	11/24/98 12/23/98	07/01/98 06/11/99	12/31/99 12/30/00	07/01/97 12/15/98
LL	Metallic Mineral Processing Plants	11/24/98 12/23/98	07/01/98 06/11/99	12/31/99 12/30/00	07/01/97 12/15/98
MM	Auto & Light-Duty Truck Surface Coating Operations	11/24/98 12/23/98	07/01/98 06/11/99	12/31/99 12/30/00	07/01/97 12/15/98
NN	Phosphate Rock Plants	11/24/98 12/23/98	07/01/98 06/11/99	12/31/99 12/30/00	07/01/97 12/15/98
PP	Ammonium Sulfate Manufacture	11/24/98 12/23/98	07/01/98 06/11/99	12/31/99 12/30/00	07/01/97 12/15/98
QQ	Graphic Arts Industry: Publication Rotogravure Printing	11/24/98 12/23/98	07/01/98 06/11/99	12/31/99 12/30/00	07/01/97 12/15/98
RR	Pressure Sensitive Tape & Label Surface Coating Operations	11/24/98 12/23/98	07/01/98 06/11/99	12/31/99 12/30/00	07/01/97 12/15/98
SS	Industrial Surface Coating: Large Appliances	11/24/98 12/23/98	07/01/98 06/11/99	12/31/99 12/30/00	07/01/97 12/15/98
TT	Metal Coil Surface Coating	11/24/98 12/23/98	07/01/98 06/11/99	12/31/99 12/30/00	07/01/97 12/15/98
UU	Asphalt Processing & Asphalt Roofing Manufacture	11/24/98 12/23/98	07/01/98 06/11/99	12/31/99 12/30/00	07/01/97 12/15/98
VV	SOCMI Equipment Leaks (VOC)	11/24/98 12/23/98	07/01/98 06/11/99	12/31/99 12/30/00	07/01/97 12/15/98
WW	Beverage Can Surface Coating Industry	11/24/98 12/23/98	07/01/98 06/11/99	12/31/99 12/30/00	07/01/97 12/15/98
XX	Bulk Gasoline Terminals	11/24/98 12/23/98	07/01/98 06/11/99	12/31/99 12/30/00	07/01/97 12/15/98
AAA	New Residential Wood Heaters	08/31/93 12/23/98	07/01/98 06/11/99	12/31/99 12/30/00	.....
BBB	Rubber Tire Manufacturing Industry	11/24/98 12/23/98	07/01/98 06/11/99	12/31/99 12/30/00	07/01/97 12/15/98
DDD	Polymer Manufacturing Industry (VOC)	11/24/98 12/23/98	07/01/98 06/11/99	12/31/99 12/30/00	.....
FFF	Flexible Vinyl and Urethane Coating and Printing	11/24/98 12/23/98	07/01/98 06/11/99	12/31/99 12/30/00	07/01/97 12/15/98
GGG	Equipment Leaks of VOC in Petroleum Refineries	11/24/98 12/23/98	07/01/98 06/11/99	12/31/99 12/30/00	07/01/97 12/15/98
HHH	Synthetic Fiber Production Facilities	11/24/98 12/23/98	07/01/98 06/11/99	12/31/99 12/30/00	07/01/97 12/15/98
III	SOCMI AIR Oxidation Unit Processes	11/24/98 12/23/98	07/01/98 06/11/99	12/31/99 12/30/00	07/01/97 12/15/98
JJJ	Petroleum Dry Cleaners	11/24/98 12/23/98	07/01/98 06/11/99	12/31/99 12/30/00	07/01/97 12/15/98
KKK	VOC Leaks from Onshore Natural Gas Processing Plants	11/24/98 12/23/98	07/01/98 06/11/99	12/31/99 12/30/00	07/01/97 12/15/98
LLL	Onshore Natural Gas Processing: SO_2 Emissions	11/24/98 12/23/98	07/01/98 06/11/99	12/31/99 12/30/00	07/01/97 12/15/98
NNN	VOC Emissions from SOCMI Distillation Operations	11/24/98 12/23/98	07/01/98 06/11/99	12/31/99 12/30/00	07/01/97 12/15/98
OOO	Nonmetallic Mineral Processing Plants	11/24/98 12/23/98	07/01/98 06/11/99	12/31/99 12/30/00	07/01/97 12/15/98

TABLE I.—DELEGATION OF AUTHORITY—PART 60 NSPS—REGION 7—Continued

Sub-part	Source category	State of Iowa	State of Kansas	State of Missouri	State of Nebraska
PPP	Wool Fiberglass Insulation Manufacturing Plants	11/24/98 12/23/98	07/01/98 06/11/99	12/31/99 12/30/00	07/01/97 12/15/98
QQQ	VOC Emissions from Petroleum Refinery Wastewater Systems	11/24/98 12/23/98	07/01/98 06/11/99	12/31/99 12/30/00	07/01/97 12/15/98
RRR	VOC Emissions from SOCMI Reactor Processes	11/24/98 12/23/98	07/01/98 06/11/99	12/31/99 12/30/00	.....
SSS	Magnetic Tape Coating Facilities	11/24/98 12/23/98	07/01/98 06/11/99	12/31/99 12/30/00	07/01/97 12/15/98
TTT	Surface Coating of Plastic Parts for Business Machines	11/24/98 12/23/98	07/01/98 06/11/99	12/31/99 12/30/00	07/01/97 12/15/98
UUU	Calciners & Dryers in Mineral Industries	11/24/98 12/23/98	07/01/98 06/11/99	12/31/99 12/30/00	07/28/92 12/15/98
VVV	Polymeric Coating of Supporting Substrates Facilities	11/24/98 12/23/98	07/01/98 06/11/99	12/31/99 12/30/00	07/01/97 12/15/98
WWW	New Municipal Solid Waste Landfills Accepting Waste On or After May 30, 1991.	11/24/98 12/23/98	07/01/98 06/11/99	12/31/99 12/30/00	07/01/96 12/15/98
AAAA	New Small Municipal Waste Combustion Units	.....	.....	.....	.....
CCCC	New Commercial and Industrial Solid Waste Incineration Units	.....	.....	.....	.....

TABLE II.—DELEGATION OF AUTHORITY—PART 61 NESHAPS—REGION 7

Subpart	Source category	State of Iowa	State of Kansas	State of Missouri	State of Nebraska	Lincoln-Lancaster County	City of Omaha
A	General Provisions	10/14/97 12/23/98	07/01/98 06/11/99	12/31/99 12/30/00	07/01/97 12/15/98	07/01/92 07/31/01	07/01/97 04/04/98
B	Radon Emissions from Underground Uranium Mines.	.....	07/01/98 06/11/99	.....	.....	.....	.....
C	Beryllium	10/14/97 12/23/98	07/01/98 06/11/99	12/31/99 12/30/00	07/01/97 12/15/98	07/01/92 07/31/01	07/01/97 04/04/98
D	Beryllium Rocket Motor Firing	10/14/97 12/23/98	07/01/98 06/11/99	12/31/99 12/30/00	07/01/97 12/15/98	07/01/92 07/31/01	07/01/97 04/04/98
E	Mercury	10/14/97 12/23/98	07/01/98 06/11/99	12/31/99 12/30/00	07/01/97 12/15/98	07/01/92 07/31/01	07/01/97 04/04/98
F	Vinyl Chloride	10/14/97 12/23/98	07/01/98 06/11/99	12/31/99 12/30/00	07/01/97 12/15/98	07/01/92 07/31/01	07/01/97 04/04/98
J	Equipment Leaks (Fugitive Emission Sources) of Benzene.	10/14/97 12/23/98	07/01/98 06/11/99	12/31/99 12/30/00	07/01/97 12/15/98	07/01/92 07/31/01	07/01/97 04/04/98
L	Benzene Emissions from Coke By-Product Recovery Plants.	10/14/97 12/23/98	07/01/98 06/11/99	12/31/99 12/30/00	07/01/97 12/15/98	07/01/92 07/31/01	07/01/97 04/04/98
M	Absestos	10/14/97 12/23/98	07/01/98 06/11/99	12/31/99 12/30/00	07/01/97 12/15/98	07/01/92 07/31/01	07/01/97 04/04/98
N	Inorganic Arsenic Emissions from Glass Manufacturing Plants.	10/14/97 12/23/98	07/01/98 06/11/99	12/31/99 12/30/00	07/01/97 12/15/98	07/01/92 07/31/01	07/01/97 04/04/98
O	Inorganic Arsenic Emissions from Primary Copper Smelters.	10/14/97 12/23/98	07/01/98 06/11/99	12/31/99 12/30/00	07/01/97 12/15/98	07/01/92 07/31/01	07/01/97 04/04/98
P	Inorganic Arsenic Emissions from Arsenic Trioxide and Metallic Arsenic Production Facilities.	10/14/97 12/23/98	07/01/98 06/11/99	12/31/99 12/30/00	07/01/97 12/15/98	07/01/92 07/31/01	07/01/97 04/04/98
Q	Radon Emissions from Department of Energy Facilities.	.....	07/01/98 06/11/99	.....	.....	.....	.....
R	Radon Emissions from Phosphogypsum Stacks.	.....	07/01/98 06/11/99	.....	.....	.....	.....
T	Radon Emissions from the Disposal of Uranium Mill Tailings.	.....	07/01/98 06/11/99	.....	.....	.....	.....
V	Equipment Leaks (Fugitive Emission Sources).	10/14/97 12/23/98	07/01/98 06/11/99	12/31/99 12/30/00	07/01/97 12/15/98	07/01/92 07/31/01	07/01/97 04/04/98
W	Radon Emissions from Operating Mill Tailings.	.....	07/01/98 06/11/99	.....	.....	.....	.....
Y	Benzene Emissions from Benzene Storage Vessels.	10/14/97 12/23/98	07/01/98 06/11/99	12/31/99 12/30/00	07/01/97 12/15/98	07/01/92 07/31/01	07/01/97 04/04/98
BB	Benzene Emissions from Benzene Transfer Operations.	10/14/97 12/23/98	07/01/98 06/11/99	12/31/99 12/30/00	07/01/97 12/15/98	07/01/92 07/31/01	07/01/97 04/04/98
FF	Benzene Waste Operations	10/14/97 12/23/98	07/01/98 06/11/99	12/31/99 12/30/00	07/01/97 12/15/98	07/01/92 07/31/01	07/01/97 04/04/98

TABLE III.—DELEGATION OF AUTHORITY—PART 63 NESHAPS—REGION 7

Subpart	Source category	State of Iowa	State of Kansas	State of Missouri	State of Nebraska	Lincoln-Lancaster County	City of Omaha
A	General Provisions	01/20/00 03/14/01	07/01/98 06/11/99	12/31/99 12/30/00	07/01/99 08/22/00	07/01/00 07/31/01	07/01/97 04/01/98
B	Requirements for Control Technology Determinations for Major Sources in Accordance with Clean Air Act Section 112(g) & (j).	01/20/00 03/14/01	07/01/98 06/11/99	12/31/99 12/30/00	12/27/96 *12/15/98	.....	12/27/96 *04/01/98
D	Compliance Extensions for Early Reductions of Hazardous Air Pollutants.	01/20/00 03/14/01	07/01/98 06/11/99	12/31/99 12/30/00	12/29/92 12/15/98	11/21/94 07/31/01	12/29/92 04/01/98
F	Organic Hazardous Air Pollutants from the Synthetic Organic Chemical Manufacturing Industry.	01/20/00 03/14/01	07/01/98 06/11/99	12/31/99 12/30/00	07/01/99 08/22/00	07/01/00 07/31/01	.....
G	Organic Hazardous Air Pollutants from the Synthetic Organic Chemical Manufacturing Industry for Process Vents, Storage Vessels, Transfer Operations, and Wastewater.	01/20/00 03/14/01	07/01/98 06/11/99	12/31/99 12/30/00	07/01/99 08/22/00	07/01/00 07/31/01	.....
H	Organic Hazardous Air Pollutants for Equipment Leaks.	01/20/00 03/14/01	07/01/98 06/11/99	12/31/99 12/30/00	07/01/99 08/22/00	07/01/00 07/31/01	.....
I	Organic Hazardous Air Pollutants for Certain Processes Subject to the Negotiated Regulation for Equipment Leaks.	01/20/00 03/14/01	07/01/98 06/11/99	12/31/99 12/30/00	07/01/99 08/22/00	07/01/00 07/31/01	.....
L	Coke Oven Batteries	01/20/00 03/14/01	07/01/98 06/11/99	12/31/99 12/30/00	.....	.....	.....
M	Perchloroethylene Emissions from Dry Cleaning Facilities.	01/20/00 03/14/01	07/01/98 06/11/99	12/31/99 12/30/00	07/01/99 08/22/00	07/01/00 07/31/01	07/01/97 04/01/98
N	Chromium Emissions from Hard and Decorative Chromium Electroplating Anodizing Tanks.	01/20/00 03/14/01	07/01/98 06/11/99	12/31/99 12/30/00	07/01/99 08/22/00	07/01/00 07/31/01	07/01/97 04/01/98
O	Ethylene Oxide Sterilization Facilities	01/20/00 03/14/01	07/01/98 06/11/99	12/31/99 12/30/00	07/01/99 08/22/00	07/01/00 07/31/01	.....
Q	Industrial Process Cooling Towers	01/20/00 03/14/01	07/01/98 06/11/99	12/31/99 12/30/00	07/01/99 08/22/00	07/01/00 07/31/01	07/01/97 04/01/98
R	Gasoline Distribution Facilities	01/20/00 03/14/01	07/01/98 06/11/99	12/31/99 12/30/00	07/01/99 08/22/00	07/01/00 07/31/01	07/01/98 04/01/98
S	Pulp and Paper Non-Combustion	01/20/00 03/14/01	07/01/98 06/11/99	12/31/99 12/30/00	07/01/99 08/22/00	07/01/00 07/31/01	.....
T	Halogenated Solvent Cleaning	01/20/00 03/14/01	07/01/98 06/11/99	12/31/99 12/30/00	07/01/99 08/22/00	07/01/00 07/31/01	07/01/97 04/01/98
U	Polymers and Resins Group I	01/20/00 03/14/01	07/01/98 06/11/99	12/31/99 12/30/00	07/01/99 08/22/00	07/01/00 07/31/01	07/01/97 04/01/98
W	Epoxy Resins and Non-Nylon Polyamides Production.	01/20/00 03/14/01	07/01/98 06/11/99	12/31/99 12/30/00	07/01/99 08/22/00	07/01/00 07/31/01	07/01/97 04/01/98
X	Secondary Lead Smelting	01/20/00 03/14/01	07/01/98 06/11/99	12/31/99 12/30/00	07/01/99 08/22/00	07/01/00 07/31/01	07/01/97 04/01/98
Y	Marine Tank Vessel Loading Operations.	01/20/00 03/14/01	07/01/98 06/11/99	12/31/99 12/30/00	.....	.....	.....
AA/BB	Phosphoric Acid/Phosphate Fertilizers	01/20/00 03/14/01	.....	12/31/99 12/30/00	07/01/99 08/22/00	07/01/00 07/31/01	.....
CC	Petroleum Refineries	01/20/00 03/14/01	07/01/98 06/11/99	12/31/99 12/30/00	07/01/99 08/22/00	07/01/97 07/31/01	.....
DD	Off-Site Waste Operations	01/20/00 03/14/01	07/01/98 06/11/99	12/31/99 12/30/00	07/01/99 08/22/00	07/01/00 07/31/01	07/01/97 04/01/98
EE	Magnetic Tape Manufacturing	01/20/00 03/14/01	07/01/98 06/11/99	12/31/99 12/30/00	07/01/99 08/22/00	07/01/00 07/31/01	.....
GG	Aerospace Manufacturing and Rework Facilities.	01/20/00 03/14/01	07/01/98 06/11/99	12/31/99 12/30/00	07/01/99 08/22/00	07/01/00 07/31/01	07/01/97 04/1/98
HH	Oil & Natural Gas Production	01/20/00 03/14/01	.....	12/31/99 12/30/00	07/01/99 08/22/00	07/01/00 07/31/01	.....
II	Shipbuilding and Ship Repair	01/20/00 03/14/01	07/01/98 06/11/99	12/31/99 12/30/00	.....	.....	07/01/97 04/1/98
JJ	Wood Furniture Manufacturing Operations.	01/20/00 03/14/01	07/01/98 06/11/99	12/31/99 12/30/00	07/01/99 08/22/00	07/01/00 07/31/01	07/01/97 04/1/98
KK	Printing and Publishing Industry	01/20/00 03/14/01	07/01/98 06/11/99	12/31/99 12/30/00	07/01/99 08/22/00	07/01/00 07/31/01	07/01/97 04/1/98
LL	Primary Aluminum Production	01/20/00 03/14/01	07/01/98 06/11/99	12/31/99 12/30/00	07/01/99 08/22/00	07/01/00 07/31/01	.....
MM	Combustion Sources at Kraft, Soda, and Sulfite Pulp & Paper Mills.	.....	.....	.....	.....	.....	.....

TABLE III.—DELEGATION OF AUTHORITY—PART 63 NESHAPS—REGION 7—Continued

Subpart	Source category	State of Iowa	State of Kansas	State of Missouri	State of Nebraska	Lincoln-Lancaster County	City of Omaha
OO	Tanks—Level 1		07/01/98 06/11/99	12/31/99 12/30/00	07/01/99 08/22/00	07/01/00 07/31/01	07/01/97 04/1/98
PP	Containers		07/01/98 06/11/99	12/31/99 12/30/00	07/01/99 08/22/00	07/01/00 07/31/01	07/01/97 04/1/98
QQ	Surface Impoundments		07/01/98 06/11/99	12/31/99 12/30/00	07/01/99 08/22/00	07/01/00 07/31/01	07/01/97 04/1/98
RR	Individual Drain Systems		07/01/98 06/11/99	12/31/99 12/30/00	07/01/99 08/22/00	07/01/00 07/31/01	07/01/97 04/1/98
SS	Closed Vent Systems, Control Devices, Recovery Devices and Routing to a Fuel Gas System or a Process.	01/20/00 03/14/01		12/31/99 12/30/00	07/01/99 08/22/00	07/01/00 07/31/00	
TT	Equipment Leaks—Control Level 1 Standards.	01/20/00 03/14/01		12/31/99 12/30/00	07/01/99 08/22/00	07/01/00 07/31/01	
UU	Equipment Leaks—Control Level 2 Standards.	01/20/00 03/14/01		12/31/99 12/30/00	07/01/99 08/22/00	07/01/00 07/31/01	
VV	Oil-Water Separators & Organic-Water Separators.		07/01/98 06/11/99	12/31/99 12/30/00	07/01/99 08/22/00	07/01/00 07/31/01	07/01/97 04/1/98
WW	Storage Vessel (Tanks)—Control Level 2.	01/20/00 03/14/01		12/31/99 12/30/00	07/01/99 08/22/00	07/01/00 07/31/01	
YY	Generic MACT	01/20/00 03/14/01		12/31/99 12/30/00	07/01/99 08/22/00	07/01/00 07/31/01	
CCC	Steel Pickling-HCL Process	01/20/00 03/14/01		12/31/99 12/30/00	07/01/99 08/22/00	07/01/00 07/31/01	
DDD	Mineral Wool Production	01/20/00 03/14/01		12/31/99 12/30/00	07/01/99 08/22/00	07/01/00 07/31/01	
EEE	Hazardous Waste Combustors	01/20/00 03/14/01		12/31/99 12/30/00		07/01/00 07/31/01	
GGG	Pharmaceutical Production	01/20/00 03/14/01		12/31/99 12/30/00	07/01/99 08/22/00	07/01/00 07/31/01	
HHH	Natural Gas Transmission and Storage	01/20/00 03/14/01		12/31/99 12/30/00	07/01/99 08/22/00	07/01/00 07/31/01	
III	Flexible Polyurethane Foam Production	01/20/00 03/14/01		12/31/99 12/30/00	07/01/99 08/22/00	07/01/00 07/31/01	
JJJ	Polymers and Resins Group IV	01/20/00 03/14/01 03/14/01	07/01/98 06/11/99	12/31/99 12/30/00	07/01/99 08/22/00	07/01/00 07/31/01	07/01/97 04/01/98
LLL	Portland Cement Manufacturing	01/20/00 03/14/01		12/31/99 12/30/00	07/01/99 08/22/00	07/01/00 07/31/01	
MMM	Pesticide Active Ingredient Production	01/20/00 03/14/01		12/31/99 12/30/00	07/01/99 08/22/00	07/01/00 07/31/01	
NNN	Wool Fiberglass Manufacturing	01/20/00 03/14/01		12/31/99 12/30/00	07/01/99 08/22/00	07/01/00 07/31/01	
OOO	Polymers & Resins III, Amino Resins/ Phenolic Resins.	01/20/00 03/14/01				07/01/01 07/31/01	
PPP	Polyether Polyols Production	01/20/00 03/14/01		12/31/99 12/30/00	07/01/99 08/22/00	07/01/00 07/31/01	
TTT	Primary Lead Smelting	01/20/00 03/14/01		12/31/99 12/30/00	07/01/99 08/22/00	07/01/00 07/31/01	
VVV	Publicly Owned Treatment Works	01/20/00 03/14/01		12/31/99 12/30/00			
XXX	Ferroalloys Production	01/20/00 03/14/01		12/31/99 12/30/00	07/01/99 08/22/00	07/01/00 07/31/01	
CCCC	Manufacturing Nutritional Yeast						
GGGG	Solvent Extraction for Vegetable Oil Production.						

Summary of This Action

After a review of the submissions, the Regional Administrator determined that delegation was appropriate for the source categories with the conditions set forth in the original NSPS and NESHAPS delegation agreements, and the limitations in all applicable regulations, including 40 CFR parts 60, 61, and 63.

You should refer to the applicable agreements and regulations referenced above to determine specific provisions which are not delegated.

All sources subject to the requirements of 40 CFR parts 60, 61, and 63 are also subject to the equivalent requirements of the above-mentioned state or local agencies.

EPA's review of the pertinent regulations shows that they contain adequate and effective procedures for the implementation and enforcement of these Federal standards. This rule informs the public of delegations to the above-mentioned agencies.

What Are the Administrative Requirements Associated With This Document?

Under Executive Order 12866 (58 FR 51735, October 4, 1993), this action is

not a ''significant regulatory action'' and is therefore not subject to review by the Office of Management and Budget. For this reason, this action is also not subject to Executive Order 13211, ''Actions Concerning Regulations That Significantly Affect Energy Supply, Distribution, or Use'' (66 FR 28355, May 22, 2001). Because the agency has made a ''good cause'' finding that this action is not subject to notice-and-comment requirements under the APA or any other statute (see section I. of this document), it is not subject to the regulatory flexibility provisions of the Regulatory Flexibility Act (5 U.S.C. 601 *et seq.*), or to sections 202 and 205 of the Unfunded Mandates Reform Act of 1995 (UMRA)(Public Law 104–4). In addition, this action does not significantly or uniquely affect small governments or impose a significant intergovernmental mandate, as described in sections 203 and 204 of UMRA. This rule also does not significantly or uniquely affect the communities of tribal governments, as specified by Executive Order 13084 (63 FR 27655, May 10, 1998). This rule will not have substantial direct effects on the states, on the relationship between the national government and the states, or on the distribution of power and responsibilities among the various levels of government, as specified in Executive Order 13132 (64 FR 43255, August 10, 1999). This rule also is not subject to Executive Order 13045 (62 FR 19885, April 23, 1997), because it is not economically significant.

This minor action does not involve technical standards; thus, the requirements of section 12(d) of the National Technology Transfer and Advancement Act of 1995 (15 U.S.C. 272 note) do not apply. This rule also does not involve special consideration of environmental justice related issues as required by Executive Order 12898 (59 FR 7629, February 16, 1994). In issuing this rule, EPA has taken the necessary steps to eliminate drafting errors and ambiguity, minimize potential litigation, and provide a clear legal standard for affected conduct, as required by section 3 of Executive Order 12988 (61 FR 4729, February 7, 1996). EPA has complied with Executive Order 12630 (53 FR 8859, March 15, 1988) by examining the takings implications of the rule in accordance with the ''Attorney General's Supplemental Guidelines for the Evaluation of Risk and Avoidance of Unanticipated Takings'' issued under the executive order. This rule does not impose an information collection burden under the provisions of the Paperwork Reduction Act of 1995 (44 U.S.C. 3501 *et seq.*).

The Congressional Review Act (5 U.S.C. 801 *et seq.*), as added by the Small Business Regulatory Enforcement Fairness Act of 1996, generally provides that before a rule may take effect, the agency promulgating the rule must submit a rule report, which includes a copy of the rule, to each House of the Congress and to the Comptroller General of the United States. EPA will submit a report containing this rule and other required information to the U.S. Senate, the U.S. House of Representatives, and the Comptroller General of the United Stats prior to publication of the rule in the **Federal Register**. This action is not a ''major rule'' as defined by 5 U.S.C. 804(2).

List of Subjects

Environmental protection, Air pollution control, Intergovernmental relations.

Authority: This notice is issued under the authority of sections 101, 110, 112, and 301 of the CAA, as amended (42 U.S.C. 7401, 7410, 7412, and 7601).

Dated: September 21, 2001.

William W. Rice,

Acting Regional Administrator, Region 7.

[FR Doc. 01–24599 Filed 10–1–01; 8:45 am]

BILLING CODE 6560–50–P

ENVIRONMENTAL PROTECTION AGENCY

40 CFR Part 63

[DE001–1001; FRL–7056–7]

Approval of Section 112(l) Authority for Hazardous Air Pollutants; State of Delaware; Department of Natural Resources and Environmental Control

AGENCY: Environmental Protection Agency (EPA).

ACTION: Direct final rule.

SUMMARY: EPA is taking direct final action to approve the Delaware Department of Natural Resources and Environmental Control's (DNREC's) request to implement and enforce its hazardous air pollutant general provisions and hazardous air pollutant emission standards for perchloroethylene dry cleaning facilities, hard and decorative chromium electroplating and chromium anodizing tanks, and industrial process cooling towers in place of similar Federal requirements set forth in the Code of Federal Regulations. This approval includes granting authority to DNREC to implement and enforce any future amendments to these provisions and standards that EPA promulgates and DNREC adopts unchanged into its regulations. EPA is not waiving its notification and reporting requirements under this approval; therefore, sources will need to send notifications and reports to both DNREC and EPA. EPA is taking this action in accordance with the Clean Air Act (CAA).

DATES: This direct final rule will be effective December 3, 2001 unless EPA receives adverse or critical comments by November 1, 2001. If adverse comment is received, EPA will publish a timely withdrawal of the rule in the **Federal Register** and inform the public that the rule will not take effect. The incorporation by reference of certain publications listed in the regulations is approved by the Director of the Federal Register as of December 3, 2001.

ADDRESSES: Written comments on this action should be sent concurrently to: Makeba A. Morris, Chief, Permits and Technical Assessment Branch, Mail Code 3AP11, Air Protection Division, U.S. Environmental Protection Agency, Region III, 1650 Arch Street, Philadelphia, PA 19103–2029 and Robert Taggart, Delaware Department of Natural Resources and Environmental Control, Division of Air and Waste Management, 715 Grantham Lane, New Castle, DE 19720. Copies of the documents relevant to this action are available for public inspection during normal business hours at the Air Protection Division, U.S. Environmental Protection Agency, Region III, 1650 Arch Street, Philadelphia, Pennsylvania 19103; the Air and Radiation Docket and Information Center, U.S. Environmental Protection Agency, 401 M Street, SW, Washington, DC 20460; and the Delaware Department of Natural Resources & Environmental Control, Division of Air and Waste Management, 715 Grantham Lane, New Castle, DE 19720.

FOR FURTHER INFORMATION CONTACT: Dianne J. McNally, U.S. Environmental Protection Agency, Region 3, 1650 Arch Street (3AP11), Philadelphia, PA 19103–2029, *mcnally.dianne@epa.gov* (telephone 215–814–3297).

SUPPLEMENTARY INFORMATION:

I. Background

The Environmental Protection Agency (EPA) promulgated the General Provisions for the National Emission Standards for Hazardous Air Pollutants (NESHAPs) on March 16, 1994 (59 FR 12430) and subsequently amended these regulations on April 22, 1994 (59 FR 19453), December 6, 1994 (59 FR 62589), January 25, 1995 (60 FR 4963), June 27, 1995 (60 FR 33122), September 1, 1995 (60 FR 45980), May 21, 1996 (61 FR 25399), December 17, 1996 (61 FR

66227), December 10, 1997 (62 FR 65024), May 4, 1998 (63 FR 24444), May 13, 1998 (63 FR 26465), September 21, 1998 (63 FR 50326), October 7, 1998 (63 FR 53996), December 1, 1998 (63 FR 66061), January 28, 1999 (64 FR 4300), February 12, 1999 (64 FR 7467), April 12, 1999 (64 FR 17562) and June 10, 1999 (64 FR 31375).

The General Provisions, located in 40 CFR part 63, subpart A, codify general procedures and criteria to implement the emission standards located in 40 CFR part 63 for sources of hazardous air pollutants. The amendments made by EPA after September 21, 1998 were not codified into the July 1, 1998 version of 40 CFR part 63, subpart A which DNREC used in developing its regulation (see section II. and III. of this rulemaking). These amendments include the incorporation by reference of test methods and other material cited in the pharmaceuticals production emission standard (40 CFR part 63, subpart GGG), the flexible polyurethane foam production emission standard (40 CFR part 63, subpart III), the phosphoric acid manufacturing and phosphate fertilizers production plant emission standards (40 CFR part 63, subparts AA and BB) and the pulp and paper industry emission standard (40 CFR part 63, subpart S), as well as information related to the approval of California's drycleaner regulation and the delegation of emission standards to the State of Washington. These amendments also include changes to 40 CFR 63.8 through 63.10 to allow for reduced monitoring, notification, recordkeeping and reporting requirements for owners or operators using continuous emission monitoring systems (CEMS).

EPA promulgated the NESHAP for perchloroethylene dry cleaning facilities on September 22, 1993 (58 FR 49354) and subsequently amended this regulation on June 3, 1996 (61 FR 27785), May 21, 1996 (61 FR 25397) and December 14, 1999 (64 FR 69637). This regulation is located in 40 CFR part 63, subpart M.

EPA promulgated the NESHAP for chromium emissions from hard and decorative chromium electroplating and chromium anodizing tanks on January 25, 1995 (60 FR 4948) and subsequently amended this regulation on June 27, 1995 (60 FR 33122), June 3, 1996 (61 FR 27785), August 11, 1997 (62 FR 42918), and December 14, 1999 (64 FR 69637). This regulation is located in 40 CFR part 63, subpart N.

EPA promulgated the NESHAP for industrial cooling towers on September 8, 1994 (59 FR 46339). This regulation is located in 40 CFR part 63, subpart Q.

Section 112(l) of the CAA and 40 CFR 63.91 and 63.92 authorize EPA to approve of State rules and programs to be implemented and enforced in place of certain CAA requirements, including the NESHAP requirements in 40 CFR part 63. EPA promulgated the program approval regulations on November 26, 1993 (58 FR 62262) and subsequently amended these regulations on September 14, 2000 (65 FR 55810). An approvable State program must contain, among other criteria, the following elements:

(a) A demonstration of the state's authority and resources to implement and enforce regulations that are at least as stringent as the NESHAP requirements;

(b) A schedule demonstrating expeditious implementation of the regulation; and

(c) A plan that assures expeditious compliance by all sources subject to the regulation.

On March 6, 2000, DNREC requested EPA's approval of its hazardous air pollutant general provisions and hazardous air pollutant emission standards for perchloroethylene dry cleaning facilities, hard and decorative chromium electroplating and chromium anodizing tanks, and industrial process cooling towers to be implemented and enforced in place of 40 CFR part 63, subparts A, M, N and Q, respectively. On September 22, 2000, DNREC provided supplemental information for its request.

II. DNREC's Regulations

A. Hazardous Air Pollutant General Provisions

In 1998, DNREC adopted, with changes, the provisions of §§ 63.1 through 63.15 of 40 CFR part 63, subpart A, dated July 1, 1997. The DNREC's rule was established as subpart A in Regulation No. 38 of the State of Delaware's ''Regulations Governing the Control of Air Pollution.'' Regulation No. 38 is entitled ''Emission Standards for Hazardous Air Pollutants for Source Categories.'' In 1999, DNREC amended this regulation to conform to several amendments that EPA made to §§ 63.11 and 63.14 of its regulation and codified in 40 CFR part 63, subpart A, dated July 1, 1998. The DNREC's regulation became effective on September 11, 1999. In summary, DNREC made the following changes from the Federal regulation:

(1) Added a definition for ''Department,'' meaning ''the Department of Natural Resources and Environmental Control, as defined in Title 29, Delaware Code, Chapter 80, as amended'';

(2) Redefined ''permitting authority'' to mean ''Department'';

(3) Removed the reference to the State in the definition of ''Administrator'';

(4) Replaced the terms ''Administrator,'' ''Administrator or by a State with an approved permit program,'' ''Administrator (or a State with an approved permit program),'' ''Administrator (or the State with an approved permit program),'' ''Administrator (or a State)'' and ''Administrator (or the State)'' with ''Department'' or ''Administrator or Department,'' where appropriate;

(5) Replaced references to the Federal title V permit program and approval dates with Delaware's title V state operating permit program under Regulation 30 of the State of Delaware ''Regulations Governing the Control of Air Pollution'' and its interim approval date, January 3, 1996;

(6) Replaced Federal language with language more appropriate for a State rule by including references to DNREC's permit programs under Regulation 2, 25, and 30, removing references to ''in all States,'' ''in that State'' and ''a State'' throughout the text, and defining ''Act'' as the Federal Clean Air Act, dated November 15, 1990;

(7) Modified the Federal language to require that the owner or operator refrain from conducting a performance test or a performance evaluation which uses an alternative test method or alternative monitoring method, approved by the Administrator, until after the Department has approved of the site-specific test plan or performance evaluation plan;

(8) Modified the Federal language to allow an extension of up to 60 calendar days after approval of the site-specific test plan or performance evaluation plan to conduct the performance test or performance evaluation if the site-specific test plan or performance evaluation plan is not approved by the Department within 30 days before the test or evaluation is scheduled to begin;

(9) Modified the Federal language to state that the Administrator's determination of an adequate validation of an alternative test method will occur upon approval of the use of the alternative test method;

(10) Required copies of requests for alternative monitoring methods, petitions for relative accuracy test substitutions, petitions for adjustments to opacity emission standards, and proposed test plans or results of testing or monitoring required for approval of alternative nonopacity emission standards to be submitted to both the Administrator and the Department;

(11) Modified the Federal language to note that owners or operators subject to this regulation may also be required to not only obtain a permit, but also revise or amend such permit;

(12) Removed the sentence referencing sources subject to 40 CFR part 60 or part 61 in the definition of affected source;

(13) Included a reference to §§ 63.5(b)(3) in 63.5(b)(4);

(14) Included references to DNREC's enforcement authority under 7 Del. C., Chapter 60, DNREC's monitoring, recordkeeping and reporting authority under Regulation 17 of the State of Delaware ''Regulations Governing the Control of Air Pollutants,'' and DNREC's confidentiality authority under 7 Del. C., Chapter 60 and 29 Del. C. , Chapter 100, Section 10002(d), where appropriate;

(15) Modified the Federal language so that sources that intend to reconstruct an area source such that the source becomes a major affected source must obtain prior written approval and are subject to the same notification requirements as major sources intending to reconstruct; and

(16) Replaced the requirement to keep the record of an applicability determination for a period of 5 years to a period of the life of the source.

As stated in section I. of this rulemaking, DNREC's regulation was adopted prior to the changes that EPA made to its regulation on and after September 21, 1998. These changes, therefore, are not included in the Delaware regulation. These changes, described in section I. of this rulemaking, do not impact the stringency of DNREC's regulation and, thus, do not alter EPA's decision to approve of DNREC's rules (see EPA's analysis in section III. of this rulemaking).

B. DNREC's Hazardous Air Pollutant Emission Standard for Perchloroethylene Dry Cleaning Facilities

In 1999, DNREC adopted, with changes, the provisions of §§ 63.320 through 63.325 of 40 CFR part 63, subpart M. The DNREC's rule was established as subpart M in Regulation No. 38 of the State of Delaware's ''Regulations Governing the Control of Air Pollution.'' Regulation No. 38 is entitled ''Emission Standards for Hazardous Air Pollutants for Source Categories.'' In 2000, DNREC amended this regulation to conform with an amendment that EPA made to § 63.320 of its regulation. The DNREC's amended regulation became effective on October 11, 2000. In summary, DNREC made the following changes from the Federal regulation:

(1) Added a definition for ''Department,'' meaning ''the Department of Natural Resources and Environmental Control, as defined in Title 29, Delaware Code, Chapter 80, as amended'';

(2) Removed the reference to the State in the definition of ''Administrator'';

(3) Replaced the terms ''Administrator,'' ''applicable title V permitting authority,'' and ''Administrator or delegated State authority'' with ''Department,'' where appropriate;

(4) Replaced references to the Federal title V permit program with Delaware's title V state operating permit program under Regulation 30 of the State of Delaware ''Regulations Governing the Control of Air Pollution'';

(5) Replaced the Federal regulation's compliance dates with the original effective date of the state regulation, June 30, 1999;

(6) Specified the date of the expiration of the title V permit deferral for area sources as December 9, 2004 and the date by which these sources must submit their title V permit applications as December 9, 2005;

(7) Required copies of requests for use of equivalent emission control technology to be submitted to both the Administrator and the Department;

(8) Removed redundant references in the applicability section of the rule, 40 CFR 63.320(c);

(9) Added work practice (pollution prevention), notification, recordkeeping and reporting requirements for coin-operated dry cleaning machines;

(10) Added title V permitting requirements for coin-operated drycleaning machines located at an affected major source;

(11) Added requirements for dry cleaning facilities that have existing dry-to-dry machines only or both existing dry-to-dry machines and transfer machines and that consume less than 530 liters (140 gallons) of perchloroethylene per year to repair leaks within 24 hours of discovery;

(12) Added requirements for dry cleaning facilities that have transfer machines only and that consume less than 760 liters (200 gallons) of perchloroethylene per year to repair leaks within 24 hours of discovery;

(13) Added requirements for sources using carbon adsorbers on room enclosures to measure the perchloroethylene concentration in the exhaust at least weekly;

(14) Redefined ''diverter valve'' to mean both a ''flow control device'' and ''flow control devices'';

(15) Added requirements for dry cleaning facilities that have existing dry-to-dry machines only or both existing dry-to-dry machines and transfer machines to notify the Department if the perchloroethylene consumption meets or exceeds 530 liters (140 gallons) in any 12 month period;

(16) Added requirements for dry cleaning facilities that have transfer machines only to notify to notify the Department if the perchloroethylene consumption meets or exceeds 760 liters (200 gallons) in any 12 month period; and

(17) Added a review procedure for the Department to follow in the event that any dry cleaning facility exceeds its annual perchloroethylene consumption rates, as established in the applicability section of the regulation, potentially requiring that facility to adhere to more stringent control requirements.

C. DNREC's Hazardous Air Pollutant Emission Standards for Hard and Decorative Chromium Electroplating and Chromium Anodizing Tanks

In 1999, DNREC adopted, with changes, the provisions of §§ 63.340 through 63.347 of 40 CFR part 63, subpart N. The DNREC's rule was established as subpart N in Regulation No. 38 of the State of Delaware's ''Regulations Governing the Control of Air Pollution.'' Regulation No. 38 is entitled ''Emission Standards for Hazardous Air Pollutants for Source Categories.'' In 2000, DNREC amended this regulation to conform with an amendment that EPA made to 40 CFR 63.340 of its regulation. The DNREC's amended regulation became effective on October 11, 2000. In summary, DNREC made the following changes from the Federal regulation:

(1) Replaced the terms ''Administrator'' and ''applicable title V permitting authority'' with ''Department,'' where appropriate;

(2) Replaced references to the Federal title V permit program with Delaware's title V state operating permit program under Regulation 30 of the State of Delaware ''Regulations Governing the Control of Air Pollution'' and its minor new source construction and modification permitting program under Regulation 2 of the State of Delaware ''Regulations Governing the Control of Air Pollution,'' where appropriate;

(3) Replaced the Federal regulation's compliance dates with the original effective date of the state regulation, September 11, 1999 and remove irrelevant or expired compliance dates, where appropriate;

(4) Specified the date of the expiration of the title V permit deferral for area

sources as December 9, 2004 and the date by which these sources must submit their title V permit application as December 9, 2005;

(5) Changed the term ''part'' in the Federal rule to ''regulation'' when referring to subpart A (General Provisions) of 40 CFR part 63;

(6) Changed ''Table 1 to Sec. 63.432'' to ''Table 342–1 to Sec. 63.342'' and changed ''Table 1 to subpart N of part 63'' to ''Table 1 of subpart N of Regulation 38'';

(7) Removed references to operations in California;

(8) Required copies of proposed work practice standards, alternative air pollution device descriptions, notifications of compliance status and performance test results to be submitted to both the Administrator and the Department;

(9) Removed irrelevant language pertaining to compliance extension requests in both the text of the rule and Table 342–1, which refers to applicable sections of the General Provisions;

(10) Referenced the test methods of 40 CFR part 63, appendix A, where appropriate;

(11) Clarified language to require an owner or operator of an area source who constructs or reconstructs a new source to submit a notification to the Department and for an owner or operator of a major source who constructs or reconstructs a new source to submit an application for approval of construction or reconstruction to the Department and, if appropriate, an application under Delaware's Regulation 2; and

(12) Added minor clarifying language and corrected typographical errors, where appropriate.

D. DNREC's Hazardous Air Pollutant Emission Standards for Industrial Process Cooling Towers

In 1999, DNREC adopted, with changes, the provisions of §§ 63.400 through 63.406 of 40 CFR part 63, subpart Q. The DNREC's rule was established as subpart Q in Regulation No. 38 of the State of Delaware's ''Regulations Governing the Control of Air Pollution.'' Regulation No. 38 is entitled ''Emission Standards for Hazardous Air Pollutants for Source Categories.'' The DNREC's regulation became effective on May 11, 1998. In summary, DNREC made the following changes from the Federal regulation:

(1) Replaced the term ''Administrator'' with ''Department'' and removed references to ''delegated authority,'' where appropriate;

(2) Replaced references to the Federal title V permit program with Delaware's title V state operating permit program under Regulation 30 of the State of Delaware ''Regulations Governing the Control of Air Pollution';

(3) Replaced the Federal regulation's compliance dates with the original effective date of the state regulation, May 11, 1998; and

(4) Included references to DNREC's analysis and data collection authority under Regulation 17 of the State of Delaware ''Regulations Governing the Control of Air Pollutants.''

III. EPA's Analysis of DNREC's Submittal and Regulations

Based upon DNREC's program approval request and its pertinent laws and regulations, EPA has determined that such an approval is appropriate in that DNREC has satisfied the criteria of 40 CFR 63.91 and 63.92. In accordance with 40 CFR 63.91(d)(3)(i), DNREC submitted a written finding by the State Attorney General which demonstrates that the State has the necessary legal authority to implement and enforce its regulations, including the enforcement authorities which meet 40 CFR 70.11, the authority to request information from regulated sources and the authority to inspect sources and records to determine compliance status. In accordance with 40 CFR 63.91(d)(3)(ii), DNREC submitted copies of its statutes, regulations and requirements that grant DNREC the authority to implement and enforce the regulations. In accordance with 40 CFR 63.91(d)(3)(iii)–(v), DNREC submitted documentation of adequate resources and a schedule and plan to assure expeditious State implementation and compliance by all sources. In accordance with 40 CFR 63.92(b)(1), DNREC submitted a demonstration of adequate public notice and opportunity to submit written comments on its regulations. The requirements of 40 CFR 63.92(b)(2)–(3), requiring a demonstration of regulations no less stringent than the Federal regulations, are described in detail in sections III.(A)–(D), below. Therefore, the DNREC program has adequate and effective authorities, resources, and procedures in place for implementation and enforcement of sources subject to the requirements of 40 CFR part 63, subparts A, M, N and Q. The DNREC has the primary authority and responsibility to carry out all elements of these programs for all sources covered in Delaware, including on-site inspections, record keeping reviews, and enforcement.

A. Hazardous Air Pollutant General Provisions

EPA has determined that subpart A in Regulation No. 38 of the State of Delaware's ''Regulations Governing the Control of Air Pollution'' is more stringent than the General Provisions in 40 CFR part 63, subpart A and, therefore, can be approved as equivalent to the Federal regulation in accordance with the rule substitution provisions of 40 CFR 63.91 and 63.92. The DNREC's regulation incorporates most of EPA's regulation with some changes. Most of these changes meet the definition of ''minor editorial, formatting, and other nonsubstantive changes,'' as described in 40 CFR 63.92(b)(3)(ix). These nonsubstantive changes include:

(1) Adding or modifying the definitions of ''Department,'' ''permitting authority,'' ''Act,'' ''Administrator'' and ''affected source'';

(2) Replacing references to ''Administrator'' with ''Department'';

(3) Replacing references to the title V program with references to Delaware's Regulation 30;

(4) Eliminating references to applicability of the regulation in other states;

(5) Including references to Delaware's Regulation 2, 25, and 30, which are the regulations governing permitting of sources in Delaware, where appropriate;

(6) Removing the general references to ''States'' in the Federal regulation;

(7) Providing clarification that the application for approval of construction or reconstruction can be used to fulfill the notification requirements for all facilities which are constructing a new major source or reconstructing any source;

(8) Including references to DNREC's enforcement, monitoring, recordkeeping and reporting and confidentiality authority under the relevant State statutes and regulations;

(9) Clarifying that owners or operators refrain from conducting a performance test or evaluation which uses an alternative test or monitoring method until after the Department has approved of the site-specific test or performance evaluation plan;

(10) Modifying the Federal language to state that the Administrator's determination of an adequate validation of an alternative test method will occur upon approval of the use of the alternative test method; and

(11) Allowing an extension of up to 60 days after the approval of a site-specific test or performance evaluation plan to conduct the performance test or evaluation if the plan is not approved by the Department within 30 days before the test is scheduled to begin.

None of these changes decrease the stringency of the regulation when compared to the Federal regulation. These changes improve the clarity of the regulation by either adding terms or references, redefining terms, eliminating unnecessary references or slightly modifying procedures. For example, in the Federal regulation, a performance test or evaluation which uses an alternative test or monitoring method cannot be conducted until after the site-specific test or performance evaluation plan (which includes the approval of the alternative test method) is deemed acceptable by the Administrator. Because major alternative test and monitoring methods can only be approved by the EPA Administrator, per 40 CFR 63.91(g)(2), DNREC, in its regulation, separated the approval of the alternative test or monitoring method and the approval of the site-specific test or evaluation plan into two distinct procedures. Therefore, once the alternative test or monitoring method is approved by either EPA, in the case of major alternatives, or the Department, in the case of minor or intermediate alternatives, the site-specific test or performance evaluation plan can be subsequently approved by the Department. These changes clarify the intent of the regulation but do not decrease the stringency.

The DNREC regulation includes changes from the Federal regulation which meet the definition of adjustments by ''increasing the frequency of required reporting, testing, sampling or monitoring,'' as described in 40 CFR 63.92(b)(3)(iv). These changes include:

(1) Requiring that copies of requests for alternative monitoring methods, petitions for relative accuracy test substitutions, petitions for adjustments to opacity emission standards and proposed test plans or results of testing or monitoring required for approval of alternative nonopacity emission standards be submitted to both the Administrator and the Department;

(2) Noting that owners and operators may be required to not only obtain a permit but to also revise or amend such permit;

(3) Requiring that the record of an applicability determination be retained for the life of the source; and

(4) Requiring that reconstructed area sources obtain prior written approval and be subject to the same notification requirements as major sources intending to reconstruct.

These changes are clearly more stringent than the Federal regulation. The Federal regulation requires that copies of certain requests, petitions and plans be submitted only to EPA. The DNREC's regulation requires the submission of these documents to both EPA and DNREC. The Federal regulation notes that owner or operators may need to obtain a permit, while DNREC's regulation notes that owners or operators may need to obtain, revise or amend a permit. The Federal regulation requires that a record of applicability determination be retained for 5 years while DNREC's regulation requires that this record be retained for the life of the source. The Federal regulation requires that major sources which reconstruct obtain prior written approval while DNREC's regulation requires that both major and area sources which reconstruct obtain prior written approval.

As stated earlier, DNREC's regulation does not include all of the modifications that EPA made to its regulation since July 1, 1998. These changes, described in section III. of this rulemaking, do not impact the stringency of DNREC's regulation and, thus, do not alter EPA's decision to approve of DNREC's rules. Most of these changes are not relevant to this rulemaking because they involve the incorporation of test methods and other material which are pertinent to emission standards and program approvals which are not addressed by this rulemaking. One amendment, however, allows for reduced monitoring, notification, recordkeeping and reporting requirements for owners or operators using continuous emission monitoring systems (CEMS). Because DNREC did not incorporate this change into its regulation, the DNREC regulation is clearly more stringent than the Federal regulation.

B. DNREC's Hazardous Air Pollutant Emission Standard for Perchloroethylene Dry Cleaning Facilities

EPA has determined that subpart M in Regulation No. 38 of the State of Delaware's ''Regulations Governing the Control of Air Pollution'' is more stringent than the National Perchloroethylene Air Emission Standards for Dry Cleaning Facilities in 40 CFR part 63, subpart M and, therefore, can be approved as equivalent to the Federal regulation in accordance with the rule substitution provisions of 40 CFR 63.91 and 63.92. The DNREC's regulation incorporates most of EPA's regulation with some changes. Most of these changes meet the definition of ''minor editorial, formatting, and other nonsubstantive changes,'' as described in 40 CFR 63.92(b)(3)(ix). These nonsubstantive changes include:

(1) Adding or modifying the definitions of ''Department,'' ''diverter valve'' and ''Administrator';

(2) Replacing references to ''Administrator,'' ''applicable title V permitting authority'' and ''Administrator or delegated authority'' with ''Department';

(3) Removing redundant references in the applicability section of the rule;

(4) Replacing references to the title V program with references to Delaware's Regulation 30;

(5) Replacing the Federal regulation's compliance date with the original effective date of the state regulation;

(6) Specifying the exact date of the title V permit deferral for area sources and the exact due date for permit applications for these sources; and

(7) Adding a review procedure for the Department to follow in the event that any dry cleaning facility exceeds the annual perchloroethylene consumption rates established in the rule.

None of these changes decrease the stringency of the regulation when compared to the Federal regulation. These changes improve the clarity of the regulation by either adding terms or references, redefining terms, eliminating unnecessary references or providing guidance on how the Department may address exceedances of the perchloroethylene limits established in the rule. The review procedure added in DNREC's regulation follows EPA's policy memo, entitled ''Guidance Concerning Implementation of National Emission Standards for Hazardous Air Pollutants for Perchloroethylene Dry Cleaning Facilities,'' dated May 20, 1996. The review procedure allows the Department to evaluate the cause of an exceedance of an annual perchloroethylene consumption rate before requiring more stringent control requirements. Because this review procedure does not exempt sources from more stringent control requirements if an exceedance occurs, but only outlines how the Department may evaluate these exceedances, this addition to the regulation is no less stringent than the Federal regulation.

The DNREC regulation includes changes from the Federal regulation which meet the definition of adjustments by ''increasing the frequency of required reporting, testing, sampling or monitoring,'' as described in 40 CFR 63.92(b)(3)(iv). These changes include:

(1) Requiring that copies of requests for use of an equivalent emission control technology be submitted to both the Administrator and the Department;

(2) Requiring that sources using carbon adsorbers on room enclosures

measure the perchloroethylene concentration in the exhaust at least weekly;

(3) Requiring drycleaning facilities that have only existing dry-to-dry machines or both existing dry-to-dry machines and transfer machines and that consume less than 530 liters of perchloroethylene per year to notify the Department if the perchloroethylene consumption meets or exceeds 530 liters in any 12 month period; and

(4) Requiring drycleaning facilities that have only transfer machines and that consume less than 760 liters of perchloroethylene per year to notify the Department if the perchloroethylene consumption meets or exceeds 760 liters in any 12 month period.

These changes are clearly more stringent than the Federal regulation. The Federal regulation requires copies of requests to use equivalent emission control technology only be submitted to EPA. The DNREC's regulation requires the submission of these documents to both the Administrator and DNREC. The Federal regulation does not require testing of the exhaust from room enclosure carbon adsorbers. The Federal regulation does not require notification of perchloroethylene consumption that exceeds the 530 and 760 liter limits.

The DNREC regulation includes changes from the Federal regulation which meet the definition of adjustments by ''subjecting additional emission points or sources to control requirements,'' as described in 40 CFR 62.92(b)(3)(vii). These changes include:

(1) Requiring coin-operated dry cleaning machines located at a major affected source to adhere to the same work practice, notification, recordkeeping and reporting requirements as small area sources with existing machines and subjecting these sources to title V permit requirements;

(2) Requiring drycleaning facilities that have only existing dry-to-dry machines or both existing dry-to-dry machines and transfer machines and that consume less than 530 liters of perchloroethylene per year to repair leaks within 24 hours of discovery; and

(3) Requiring drycleaning facilities that have only transfer machines and that consume less than 760 liters of perchloroethylene per year to repair leaks within 24 hours of discovery.

These changes are clearly more stringent than the Federal requirement. The Federal regulation exempts coin-operated dry cleaning machines from work practice, notification, recordkeeping, reporting and title V requirements. The Federal regulation does not require the aforementioned facilities to repair leaks within 24 hours of discovery.

C. DNREC's Hazardous Air Pollutant Emission Standards for Hard and Decorative Chromium Electroplating and Chromium Anodizing Tanks

EPA has determined that subpart N in Regulation No. 38 of the State of Delaware's ''Regulations Governing the Control of Air Pollution'' is more stringent than the National Emission Standards for Chromium Emissions From Hard and Decorative Chromium Electroplating and Chromium Anodizing Tanks in 40 CFR part 63, subpart N and, therefore, can be approved as equivalent to the Federal regulation in accordance with the rule substitution provisions of 40 CFR 63.91 and 63.92. The DNREC's regulation incorporates most of EPA's regulation with some changes. Most of these changes meet the definition of ''minor editorial, formatting, and other nonsubstantive changes,'' as described in 40 CFR 63.92(b)(3)(ix). These nonsubstantive changes include:

(1) Replacing references to ''Administrator'' and ''applicable title V permitting authority'' with ''Department'';

(2) Replacing references to the title V program with references to Delaware's Regulation 30 and its minor new source construction and modification permitting program under Regulation 2 of the State of Delaware ''Regulations Governing the Control of Air Pollution,'' where appropriate;

(3) Replacing the Federal regulation's compliance date with the original effective date of the state regulation;

(4) Specifying the exact date of the title V permit deferral for area sources and the exact due date for permit applications for these sources;

(5) Removing references to operations in California;

(6) Removing irrelevant language pertaining to compliance extension requests;

(7) Referencing relevant test methods in 40 CFR part 63, appendix A; and

(8) Adding minor clarifying language and correcting typographical errors, where appropriate.

None of these changes decrease the stringency of the regulation when compared to the Federal regulation. These changes improve the clarity of the regulation by either adding terms or references, redefining terms, eliminating unnecessary references or correcting typographical errors. The DNREC removed the language related to compliance extension requests because sources can no longer apply for these extension, since the compliance date has already past.

The DNREC regulation includes changes from the Federal regulation which meet the definition of adjustments by ''increasing the frequency of required reporting, testing, sampling or monitoring,'' as described in 40 CFR 63.92(b)(3)(iv). These changes include:

(1) Requiring that copies of requests of proposed work practice standards, alternative air pollution device descriptions, notifications of compliance status and performance test results be submitted to both the Administrator and the Department; and

(2) Clarifying that an owner or operator of an area source who constructs or reconstructs a new source submit a notification to the Department and that an owner or operator of a major source who constructs or reconstructs a new source submit an application for approval of construction or reconstruction to the Department and, if appropriate, an application under Delaware's Regulation 2.

These changes are clearly more stringent than the Federal regulation. The Federal regulation requires that copies of requests and notifications only be submitted to the Administrator. The DNREC's regulation requires the submission of these documents to both the Administrator and DNREC. The Federal regulation does not clarify that construction and reconstruction notifications and applications be submitted to the delegated authority.

D. DNREC's Hazardous Air Pollutant Emission Standards for Industrial Process Cooling Towers

EPA has determined that subpart Q in Regulation No. 38 of the State of Delaware's ''Regulations Governing the Control of Air Pollution'' is more stringent than the National Emission Standards for Hazardous Air Pollutants for Industrial Cooling Towers in 40 CFR part 63, subpart Q and therefore, can be approved as equivalent to the Federal regulation in accordance with the rule substitution provisions of 40 CFR 63.91 and 63.92. The DNREC's regulation incorporates most of EPA's regulation with some changes. All of these changes meet the definition of ''minor editorial, formatting, and other nonsubstantive changes,'' as described in 40 CFR 63.92(b)(3)(ix). These nonsubstantive changes include:

(1) Replacing the term ''Administrator'' with ''Department'';

(2) Replacing references to the title V program with references to Delaware's Regulation 30;

(3) Replacing the Federal regulation's compliance date with the original effective date of the state regulation; and

(4) Including references to DNREC's analysis and data collection authority under Regulation 17 of the State of Delaware ''Regulations Governing the Control of Air Pollutants.''

None of these changes decrease the stringency of the regulation when compared to the Federal regulation. These changes improve the clarity of the regulation by either adding terms or references, redefining terms, or eliminating unnecessary references.

IV. Terms of Program Approval and Delegation of Authority

In order for DNREC to receive delegation of future amendments to the Federal hazardous air pollutant general provisions and hazardous air pollutant emission standards for perchloroethylene dry cleaning facilities, hard and decorative chromium electroplating and chromium anodizing tanks, and industrial process cooling towers, each amendment must be legally adopted by the State of Delaware, with adequate opportunity for public participation and public comment, and DNREC must notify the Director, Air Protection Division, EPA Region III, that it has adopted additional amendments and that it intends to enforce the amendments in conformance with the terms of this program approval and delegation. EPA, upon its review and approval, in accordance with 40 CFR 63.91(e), will incorporate by reference the State of Delaware's revised regulations into 40 CFR 63.14 and amend 40 CFR 63.99, as appropriate.

The notification and reporting provisions in 40 CFR part 63 requiring the owners or operators of affected sources to make submissions to the Administrator shall be met by sending such submissions to DNREC and EPA Region III.

If at any time there is a conflict between a DNREC regulation and a Federal regulation, the Federal regulation must be applied if it is more stringent than that of DNREC. EPA is responsible for determining stringency between conflicting regulations. If DNREC does not have the authority to enforce the more stringent Federal regulation, it shall notify EPA Region III in writing as soon as possible, so that this portion of the delegation may be revoked.

If EPA determines that DNREC's procedure for enforcing or implementing the 40 CFR part 63 requirements is inadequate, or is not being effectively carried out, this delegation may be revoked in whole or in part in accordance with the procedures set out in 40 CFR 63.96(b).

Certain provisions of 40 CFR part 63 allow only the Administrator of EPA to take further standard setting actions. In addition to the specific authorities retained by the Administrator in 40 CFR 63.90(d) and the ''Delegation of Authorities'' section for specific standards, EPA Region III is retaining the following authorities, in accordance with 40 CFR 63.91(g)(2)(ii):

(1) Approval of alternative non-opacity emission standards, e.g., 40 CFR 63.6(g) and applicable sections of relevant standards;

(2) Approval of alternative opacity standards, e.g., 40 CFR 63.9(h)(9) and applicable sections of relevant standards;

(3) Approval of major alternatives to test methods, as defined in 40 CFR 63.90(a), e.g., 40 CFR 63.7(e)(2)(ii) and (f) and applicable sections of relevant standards;

(4) Approval of major alternatives to monitoring, as defined in 40 CFR 63.90(a), e.g., 40 CFR 63.8(f) and applicable sections of relevant standards; and

(5) Approval of major alternatives to recordkeeping and reporting, as defined in 40 CFR 63.90(a), e.g., 40 CFR 63.10(f) and applicable sections of relevant standards.

The following provisions are included in this delegation, in accordance with 40 CFR 63.91(g)(1)(i), and can only be exercised on a case-by-case basis. When any of these authorities are exercised, DNREC must notify EPA Region III in writing:

(1) Applicability determinations for sources during the title V permitting process and as sought by an owner/operator of an affected source through a formal, written request, e.g., 40 CFR 63.1 and applicable sections of relevant standards [1];

(2) Responsibility for determining compliance with operation and maintenance requirements, e.g., 40 CFR 63.6(e) and applicable sections of relevant standards;

(3) Responsibility for determining compliance with non-opacity standards, e.g., 40 CFR 63.6(f) and applicable sections of relevant standards;

(4) Responsibility for determining compliance with opacity and visible emission standards, e.g., 40 CFR 63.6(h) and applicable sections of relevant standards;

(5) Approval of site-specific test plans,[2] *e.g.* 40 CFR 63.7(c)(2)(i) and (d) and applicable sections of relevant standards;

(6) Approval of minor alternatives to test methods, as defined in 40 CFR 63.90(a), e.g., 40 CFR 63.7(e)(2)(i) and applicable sections of relevant standards;

(7) Approval of intermediate alternatives to test methods, as defined in 40 CFR 63.90(a), e.g., 40 CFR 63.7(e)(2)(ii) and (f) and applicable sections of relevant standards;

(8) Approval of shorter sampling times/volumes when necessitated by process variables and other factors, *e.g.*, 40 CFR 63.7(e)(2)(iii) and applicable sections of relevant standards;

(9) Waiver of performance testing, *e.g.*, 40 CFR 63.7 (e)(2)(iv), (h)(2), and (h)(3) and applicable sections of relevant standards;

(10) Approval of site-specific performance evaluation (monitoring) plans,[3] *e.g.*, 40 CFR 63.8(c)(1) and (e)(1) and applicable sections of relevant standards;

(11) Approval of minor alternatives to monitoring methods, as defined in 40 CFR 63.90(a), *e.g.*, 40 CFR 63.8(f) and applicable sections of relevant standards;

(12) Approval of intermediate alternatives to monitoring methods, as defined in 40 CFR 63.90(a), *e.g.*, 40 CFR 63.8(f) and applicable sections of relevant standards;

(13) Approval of adjustments to time periods for submitting reports, *e.g.*, 40 CFR 63.9 and 63.10 and applicable sections of relevant standards; and

(14) Approval of minor alternatives to recordkeeping and reporting, as defined in 40 CFR 63.90(a), *e.g.*, 40 CFR 63.10(f) and applicable sections of relevant standards.

[1] Applicability determinations are considered to be nationally significant when they:

(i) Are unusally complex or controversial;

(ii) Have bearign on more than one state or are multi-Regional;

(iii) Appear to create a conflict with previous policy or determinations;

(iv) Are a legal issue which has not been previously considered; or

(v) Raise new policy questions and shall be forwarded to EPA Region III prior to finalization.

Detailed information on the applicability determination process may be found in EPA document 305–B–99–004 *How to Review and Issue Clean Air Act Applicability Determinations and Alternative Monitoring*, dated February 1999. The DNREC may also refer to the Compendium of Applicability Determinations issued by the EPA and may contact EPA Region III for guidance.

[2] The DNREC will notify EPA of these approvals on a quarterly basis by submitting a copy of the test plan approval letter. Any plans which propose major alternative test methods or major alternative monitoring methods shall be referred to EPA for approval.

[3] The DNREC will notify EPA of these approvals on a quarterly basis by submitting a copy of the performance evaluation plan approval letter. Any plans which propose major alternative test methods or major alternative monitoring methods shall be referred to EPA for approval.

As required, DNREC and EPA Region III will provide the necessary written, verbal and/or electronic notification to ensure that each agency is fully informed regarding the interpretation of applicable regulations in 40 CFR part 63. In instances where there is a conflict between a DNREC interpretation and a Federal interpretation of applicable regulations in 40 CFR part 63, the Federal interpretation must be applied if it is more stringent than that of DNREC. Written, verbal and/or electronic notification will also be used to ensure that each agency is informed of the compliance status of affected sources in Delaware. The DNREC will comply with all of the requirements of 40 CFR 63.91(g)(1)(ii).

Quarterly reports will be submitted to EPA by DNREC to identify sources determined to be applicable during that quarter.

Although DNREC has primary authority and responsibility to implement and enforce the hazardous air pollutant general provisions and hazardous air pollutant emission standards for perchloroethylene dry cleaning facilities, hard and decorative chromium electroplating and chromium anodizing tanks, and industrial process cooling towers requirements, nothing shall preclude, limit, or interfere with the authority of EPA to exercise its enforcement, investigatory, and information gathering authorities concerning this part of the Act.

V. Final Action

EPA is approving DNREC's Regulation No. 38, subpart A, as amended, effective September 11, 1999, DNREC's Regulation No. 38, subpart M, as amended, effective October 11, 2000, DNREC's Regulation No. 38, subpart N, as amended, effective October 11, 2000 and DNREC's Regulation No. 38, subpart Q, effective April 4, 1998, as equivalent to the CAA section 112(d) requirements set forth in 40 CFR part 63, subparts A, M, N and Q, respectively, for affected sources in the State of Delaware. Accordingly, EPA is revising 40 CFR 63.14 and 63.99 to reflect the Federal enforceability of DNREC's regulations. The DNREC's regulation adopts the Federal requirements found in 40 CFR part 63, subparts A, M, N and Q, dated July 1, 1998, with some adjustments. Affected sources will need to refer to both DNREC's regulations and 40 CFR part 63, subparts A, M, N and Q, dated July 1, 1998 to comply. This approval also includes granting authority to DNREC to implement and enforce any future amendments to these provisions and standards that EPA promulgates and DNREC adopts unchanged into its regulations. The delegation of authority shall be administered in accordance with the terms outlined in section IV., above.

EPA is publishing this rule without prior proposal because the Agency views this as a noncontroversial amendment and anticipates no adverse comment. The adjustments and substitutions made in the DNREC regulation are primarily non-substantive and relate to minor editorial and formatting changes from the Federal rule. The substantive changes from the Federal regulation relate to increasing the frequency of reporting, testing, sampling or monitoring, and subjecting additional emission points or sources to control requirements. However, in the ''Proposed Rules'' section of today's **Federal Register**, EPA is publishing a separate document that will serve as the proposal to approve the program approval request if adverse comments are filed. This rule will be effective on December 3, 2001 without further notice unless EPA receives adverse comment by November 1, 2001. If EPA receives adverse comment, EPA will publish a timely withdrawal in the **Federal Register** informing the public that the rule will not take effect. EPA will address all public comments in a subsequent final rule based on the proposed rule. EPA will not institute a second comment period on this action. Any parties interested in commenting must do so at this time. Please note that if EPA receives adverse comment on an amendment, paragraph, or section of this rule and if that provision may be severed from the remainder of the rule, EPA may adopt as final those provisions of the rule that are not the subject of an adverse comment.

VI. Administrative Requirements

A. General Requirements

Under Executive Order 12866 (58 FR 51735, October 4, 1993), this action is not a ''significant regulatory action'' and therefore is not subject to review by the Office of Management and Budget. For this reason, this action is also not subject to Executive Order 13211, ''Actions Concerning Regulations That Significantly Affect Energy Supply, Distribution, or Use'' (66 FR 28355, May 22, 2001). This action merely approves state law as meeting Federal requirements and imposes no additional requirements beyond those imposed by state law. Accordingly, the Administrator certifies that this rule will not have a significant economic impact on a substantial number of small entities under the Regulatory Flexibility Act (5 U.S.C. 601 *et seq.*). Because this rule approves pre-existing requirements under state law and does not impose any additional enforceable duty beyond that required by state law, it does not contain any unfunded mandate or significantly or uniquely affect small governments, as described in the Unfunded Mandates Reform Act of 1995 (Public Law 104–4). This rule also does not have a substantial direct effect on one or more Indian tribes, on the relationship between the Federal Government and Indian tribes, or on the distribution of power and responsibilities between the Federal Government and Indian tribes, as specified by Executive Order 13175 (65 FR 67249 November 9, 2000), nor will it have substantial direct effects on the States, on the relationship between the national government and the States, or on the distribution of power and responsibilities among the various levels of government, as specified in Executive Order 13132 (64 FR 43255, August 10, 1999), because it merely approves a state rule implementing a Federal standard, and does not alter the relationship or the distribution of power and responsibilities established in the CAA. This rule also is not subject to Executive Order 13045 (62 FR 19885 April 23, 1997), because it is not economically significant.

In reviewing requests for rule approval under CAA section 112, EPA's role is to approve state choices, provided that they meet the criteria of the CAA. In this context, in the absence of a prior existing requirement for the State to use voluntary consensus standards (VCS), EPA has no authority to disapprove requests for rule approval under CAA section 112 for failure to use VCS. It would thus be inconsistent with applicable law for EPA, when it reviews a request for rule approval under CAA section 112, to use VCS in place of a request for rule approval under CAA section 112 that otherwise satisfies the provisions of the CAA. Thus, the requirements of section 12(d) of the National Technology Transfer and Advancement Act of 1995 (15 U.S.C. 272 note) do not apply. As required by section 3 of Executive Order 12988 (61 FR 4729, February 7, 1996), in issuing this rule, EPA has taken the necessary steps to eliminate drafting errors and ambiguity, minimize potential litigation, and provide a clear legal standard for affected conduct. EPA has complied with Executive Order 12630 (53 FR 8859, March 15, 1988) by examining the takings implications of the rule in accordance with the ''Attorney General's Supplemental Guidelines for the Evaluation of Risk and Avoidance of

Unanticipated Takings'' issued under the executive order. This rule does not impose an information collection burden under the provisions of the Paperwork Reduction Act of 1995 (44 U.S.C. 3501 *et seq.*).

B. Submission to Congress and the Comptroller General

The Congressional Review Act, 5 U.S.C. 801 *et seq.*, as added by the Small Business Regulatory Enforcement Fairness Act of 1996, generally provides that before a rule may take effect, the agency promulgating the rule must submit a rule report, which includes a copy of the rule, to each House of the Congress and to the Comptroller General of the United States. EPA will submit a report containing this rule and other required information to the U.S. Senate, the U.S. House of Representatives, and the Comptroller General of the United States prior to publication of the rule in the **Federal Register**. This rule is not a ''major rule'' as defined by 5 U.S.C. 804(2).

C. Petitions for Judicial Review

Under section 307(b)(1) of the CAA, petitions for judicial review of this action must be filed in the United States Court of Appeals for the appropriate circuit by December 3, 2001. Filing a petition for reconsideration by the Administrator of this final rule does not affect the finality of this rule for the purposes of judicial review nor does it extend the time within which a petition for judicial review may be filed, and shall not postpone the effectiveness of such rule or action. This action, pertaining to the approval of Delaware's regulations for hazardous air pollutant general provisions and hazardous air pollutant emission standards for perchloroethylene dry cleaning facilities, hard and decorative chromium electroplating and chromium anodizing tanks, and industrial process cooling towers (CAA section 112), may not be challenged later in proceedings to enforce its requirements. (See section 307(b)(2).)

List of Subjects in 40 CFR Part 63

Environmental protection, Administrative practice and procedure, Air pollution control, Hazardous substances, Incorporation by reference, Intergovernmental relations.

Dated: September 7, 2001.

Donald S. Welsh,

Regional Administrator, Region III.

40 CFR part 63 is amended as follows:

PART 63—[AMENDED]

1. The authority citation for part 63 continues to read as follows:

Authority: 42 U.S.C. 7401, *et. seq.*

2. Section 63.14 is amended by adding paragraph (d)(3)(iii) to read as follows:

§ 63.14 Incorporation by Reference.

* * * * *

(d) * * *

(3) * * *

(iii) State of Delaware Regulations Governing the Control of Air Pollution (October 2000), IBR approved for § 63.99(a)(8)(ii)–(v) of subpart E of this part.

Subpart E—Approval of State Programs and Delegation of Federal Authorities

3. Section 63.99 is amended by adding paragraphs (a)(8)(ii) through (v) to read as follows:

§ 63.99 Delegated Federal authorities.

(a) * * *

(8) Delaware

(i) * * *

(ii) Affected sources must comply with the State of Delaware Regulations Governing the Control of Air Pollution, Regulation No. 38, subpart A, effective September 11, 1999 (incorporated by reference as specified in § 63.14). The material incorporated in the State of Delaware Regulations Governing the Control of Air Pollution, Regulation No. 38, subpart A pertains to owners and operators of stationary sources in the State of Delaware that are subject to emission standard requirements of the State of Delaware Regulations Governing the Control of Air Pollution, Regulation No. 38, subparts M, N and Q and 40 CFR part 63 and has been approved under the procedures in § 63.91 and § 63.92 to be implemented and enforced in place of 40 CFR part 63, subpart A. Delaware is delegated the authority to implement and enforce its regulation in place of 40 CFR part 63, subpart A, in accordance with the final rule, published in the **Federal Register** on October 2, 2001, effective December 3, 2001.

(iii) Affected sources must comply with the State of Delaware Regulations Governing the Control of Air Pollution, Regulation No. 38, subpart M, effective October 11, 2000 (incorporated by reference as specified in § 63.14). The material incorporated in the State of Delaware Regulations Governing the Control of Air Pollution, Regulation No. 38, subpart M pertains to owners and operators of perchloroethylene drycleaning facilities and has been approved under the procedures in § 63.91 and § 63.92 to be implemented and enforced in place of 40 CFR part 63, subpart M. Delaware is delegated the authority to implement and enforce its regulation in place of 40 CFR part 63, subpart M, in accordance with the final rule, published in the **Federal Register** on October 2, 2001, effective December 3, 2001.

(iv) Affected sources must comply with the State of Delaware Regulations Governing the Control of Air Pollution, Regulation No. 38, subpart N, effective October 11, 2000 (incorporated by reference as specified in § 63.14). The material incorporated in the State of Delaware Regulations Governing the Control of Air Pollution, Regulation No. 38, subpart N pertains to owners and operators of hard and decorative chromium electroplating and chromium anodizing tanks and has been approved under the procedures in § 63.91 and § 63.92 to be implemented and enforced in place of 40 CFR part 63, subpart N. Delaware is delegated the authority to implement and enforce its regulation in place of 40 CFR part 63, subpart N, in accordance with the final rule, published in the **Federal Register** on October 2, 2001, effective December 3, 2001.

(v) Affected sources must comply with the State of Delaware Regulations Governing the Control of Air Pollution, Regulation No. 38, subpart Q, effective May 11, 1998 (incorporated by reference as specified in § 63.14). The material incorporated in the State of Delaware Regulations Governing the Control of Air Pollution, Regulation No. 38, subpart Q pertains to owners and operators of industrial process cooling towers and has been approved under the procedures in § 63.91 and § 63.92 to be implemented and enforced in place of 40 CFR part 63, subpart Q. Delaware is delegated the authority to implement and enforce its regulation in place of 40 CFR part 63, subpart Q, in accordance with the final rule, published in the **Federal Register** on October 2, 2001, effective December 3, 2001.

[FR Doc. 01–24202 Filed 10–1–01; 8:45 am]

BILLING CODE 6560–50–P

Proposed Rules

Federal Register
Vol. 66, No. 191
Tuesday, October 2, 2001

This section of the FEDERAL REGISTER contains notices to the public of the proposed issuance of rules and regulations. The purpose of these notices is to give interested persons an opportunity to participate in the rule making prior to the adoption of the final rules.

DEPARTMENT OF TRANSPORTATION

Federal Aviation Administration

14 CFR Part 39

[Docket No. 2001–CE–29–AD]

RIN 2120–AA64

Airworthiness Directives; Dornier Luftfahrt GmbH Model 228–212 Airplanes

AGENCY: Federal Aviation Administration, DOT.

ACTION: Notice of proposed rulemaking (NPRM).

SUMMARY: This document proposes to adopt a new airworthiness directive (AD) that would apply to all Dornier Luftfahrt GmbH (Dornier) Model 228–212 airplanes that have a certain brake assembly installed. This proposed AD would require you to inspect the brake housing subassembly for cracks, nicks, or corrosion (referred to as damage). This proposed AD would also require you to replace damaged brake housing assemblies and modify the torque take-out cavity. This proposed AD is the result of mandatory continuing airworthiness information (MCAI) issued by the airworthiness authority for Germany. The actions specified by this proposed AD are intended to detect and correct damage to the brake housing assembly, which could result in failure of this assembly. Such failure could lead to loss of braking action on landing and possible loss of control of the airplane.

DATES: The Federal Aviation Administration (FAA) must receive any comments on this proposed rule on or before November 7, 2001.

ADDRESSES: Submit comments to FAA, Central Region, Office of the Regional Counsel, Attention: Rules Docket No. 2001–CE–29–AD, 901 Locust, Room 506, Kansas City, Missouri 64106. You may view any comments at this location between 8 a.m. and 4 p.m., Monday through Friday, except Federal holidays.

You may get service information that applies to this proposed AD from Dornier Luftfahrt GmbH, Customer Support, P.O. Box 1103, D–82230 Wessling, Federal Republic of Germany; telephone: (08153) 300; facsimile: (08153) 304463. You may also view this information at the Rules Docket at the address above.

FOR FURTHER INFORMATION CONTACT: Karl Schletzbaum, Aerospace Engineer, FAA, Small Airplane Directorate, 901 Locust, Room 301, Kansas City, Missouri 64106; telephone: (816) 329–4146; facsimile: (816) 329–4090.

SUPPLEMENTARY INFORMATION:

Comments Invited

How Do I Comment on This Proposed AD?

The FAA invites comments on this proposed rule. You may submit whatever written data, views, or arguments you choose. You need to include the rule's docket number and submit your comments to the address specified under the caption **ADDRESSES.** We will consider all comments received on or before the closing date. We may amend this proposed rule in light of comments received. Factual information that supports your ideas and suggestions is extremely helpful in evaluating the effectiveness of this proposed AD action and determining whether we need to take additional rulemaking action.

Are There Any Specific Portions of This Proposed AD I Should Pay Attention to?

The FAA specifically invites comments on the overall regulatory, economic, environmental, and energy aspects of this proposed rule that might suggest a need to modify the rule. You may view all comments we receive before and after the closing date of the rule in the Rules Docket. We will file a report in the Rules Docket that summarizes each contact we have with the public that concerns the substantive parts of this proposed AD.

How Can I Be Sure FAA Receives My Comment?

If you want FAA to acknowledge the receipt of your comments, you must include a self-addressed, stamped postcard. On the postcard, write ''Comments to Docket No. 2001–CE–29–AD.'' We will date stamp and mail the postcard back to you.

Discussion

What Events Have Caused This Proposed AD?

The Luftfahrt-Bundesamt (LBA), which is the airworthiness authority for Germany, recently notified FAA that an unsafe condition may exist on all Dornier Model 228–212 airplanes equipped with brake assembly part-number 5009850–1, 5009850–2, 5009850–3, or 5009850–4. The LBA reports one occurrence of failure of the right-hand main landing gear (MLG) brake housing subassembly on one of the above-referenced airplanes. Failure of the brake housing assembly resulted in total loss of braking power.

The brake manufacturer, Aircraft Braking Systems Corporation (ABSC), has developed a modification to the torque take-out cavity of the brake housing assembly. The incorporation of this modification on Dornier Model 228–212 airplanes would prevent surface damage from developing into fatigue damage.

What Are the Consequences if the Condition Is Not Corrected?

Damage to the brake housing assembly, if not detected and corrected, could result in failure of this assembly. Such failure could result in loss of braking action on landing and possible loss of control of the airplane.

Is There Service Information That Applies to This Subject?

Fairchild/Dornier has issued Dornier 228 Service Bulletin No. SB–228–236, dated January 11, 2001.

ABSC has issued Service Bulletin Do228–212–32–12, dated November 15, 2000, and Service Bulletin Do228–212–32–13, dated December 15, 2000.

What Are the Provisions of This Service Information?

The ABSC Service Bulletins include procedures for inspecting and modifying the brake housing assembilies as specified in the Fairchild/Dornier Service Bulletin.

What Action Did the LBA Take?

The LBA classified these service bulletins as mandatory and issued German AD Number 2001–164, dated June 14, 2001, in order to ensure the continued airworthiness of these airplanes in Germany.

Was This in Accordance With the Bilateral Airworthiness Agreement?

This airplane model is manufactured in Germany and is type certificated for operation in the United States under the provisions of section 21.29 of the Federal Aviation Regulations (14 CFR 21.29) and the applicable bilateral airworthiness agreement.

Pursuant to this bilateral airworthiness agreement, the LBA has kept FAA informed of the situation described above.

The FAA's Determination and an Explanation of the Provisions of This Proposed AD

What Has FAA Decided?

The FAA has examined the findings of the LBA; reviewed all available information, including the service information referenced above; and determined that:

—The unsafe condition referenced in this document exists or could develop on other Dornier Model 228–212 airplanes of the same type design;

—The actions specified in the previously-referenced service information should be accomplished on the affected airplanes; and

—AD action should be taken in order to correct this unsafe condition.

What Would This Proposed AD Require?

This proposed AD would require you to inspect the brake housing subassembly for cracks, nicks, or corrosion (referred to as damage), replace damaged brake housing assemblies, and modify the torque take-out cavity.

Cost Impact

How Many Airplanes Would This Proposed AD Impact?

We estimate that this proposed AD affects 1 airplane in the U.S. registry.

What Would Be the Cost Impact of This Proposed AD on Owners/Operators of the Affected Airplanes?

We estimate the following costs to accomplish the proposed inspection:

Labor cost	Parts cost	Total cost per airplane	Total cost on U.S. operators
10 workhours × $60 per hour = $600	No parts required for the inspection.	$600	$600

You would not need parts or special equipment to accomplish any necessary repairs after the proposed inspection. The time necessary to accomplish any repairs is included in the inspection labor cost.

We estimate the following costs to accomplish any necessary replacements that would be required based on the results of the proposed inspection. We have no way of determining the number of airplanes that may need such replacement.

Labor cost	Parts cost	Total cost per airplane
9 workhours × $60 per hour = $540.	$46	$586

ABSC will provide labor reimbursement for the modification to the torque take-out cavity of the brake housing to the extent noted in Service Bulletin Do228–212–13, dated December 15, 2000.

Regulatory Impact

Would This Proposed AD Impact Various Entities?

The regulations proposed herein would not have a substantial direct effect on the States, on the relationship between the national government and the States, or on the distribution of power and responsibilities among the various levels of government. Therefore, it is determined that this proposed rule would not have federalism implications under Executive Order 13132.

Would This Proposed AD Involve a Significant Rule or Regulatory Action?

For the reasons discussed above, I certify that this proposed action (1) is not a ''significant regulatory action'' under Executive Order 12866; (2) is not a ''significant rule'' under DOT Regulatory Policies and Procedures (44 FR 11034, February 26, 1979); and (3) if promulgated, will not have a significant economic impact, positive or negative, on a substantial number of small entities under the criteria of the Regulatory Flexibility Act. A copy of the draft regulatory evaluation prepared for this action has been placed in the Rules Docket. A copy of it may be obtained by contacting the Rules Docket at the location provided under the caption **ADDRESSES**.

List of Subjects in 14 CFR Part 39

Air transportation, Aircraft, Aviation safety, Safety.

The Proposed Amendment

Accordingly, under the authority delegated to me by the Administrator, the Federal Aviation Administration proposes to amend part 39 of the Federal Aviation Regulations (14 CFR part 39) as follows:

PART 39—AIRWORTHINESS DIRECTIVES

1. The authority citation for part 39 continues to read as follows:

Authority: 49 U.S.C. 106(g), 40113, 44701.

§ 39.13 [Amended]

2. FAA amends § 39.13 by adding a new airworthiness directive (AD) to read as follows:

Dornier Luftfahrt GMBH: Docket No. 2001–CE–29–AD

(a) *What airplanes are affected by this AD?* This AD affects Model 228–212 airplanes, all serial numbers, that are:

(1) certificated in any category; and

(2) equipped with brake assembly part-number 5009850–1, 5009850–2, 5009850–3, or 5009850–4.

(b) *Who must comply with this AD?* Anyone who wishes to operate any of the above airplanes must comply with this AD.

(c) *What problem does this AD address?* The actions specified in this AD are intended to detect and correct damage to the brake housing assembly, which could result in failure of this assembly. Such failure could lead to loss of braking action on landing and possible loss of control of the airplane.

(d) *What actions must I accomplish to address this problem?* To address this problem, you must accomplish the following:

Actions	Compliance	Procedures
(1) Inspect, using both visual and eddy current methods, the brake housing subassembly for damage (cracks, nicks, corrosion, etc.), and accomplish the following: (i) Replace the brake housing if damage is found in the torque take-out cavity in the area specified in the referenced service information; or (ii) Repair the brake housing if damage is found on the walls of the torque take-out cavity and the width exceeds the maximum limit specified in the referenced service information.	Inspect within the next 300 hours time-in-service (TIS) after the effective date of this AD. Repair or replace prior to further flight.	In accordance with Aircraft Braking Systems Corporation Service Bulletin Do228–212–32–13, dated December 15, 2000, and Aircraft Braking Systems Corporation Service Bulletin Service Bulletin Do228–212–32–12, dated November 15, 2000, as specified in Fairchild/Dornier Dornier 228 Service Bulletin SB–228–236, issued January 11, 2001.
(2) Modify the torque take-out cavity of the brake housing assembly.	Prior to further flight after the inspection required by paragraph (d)(1) of this AD, and thereafter prior to the installation of a brake housing assembly.	In accordance with Aircraft Braking Systems Corporation Service Bulletin Do228–212–32–13, dated December 15, 2000, and Aircraft Braking Systems Corporation Service Bulletin Service Bulletin Do228–212–32–12, dated November 15, 2000, as specified in Fairchild/Dornier Dornier 228 Service Bulletin SB–228–236, issued January 11, 2001.
(3) Do not install any brake housing assembly (or FAA-approved equivalent part number) unless it has been inspected as required in paragraph (d)(1) of this AD and modified as required in paragraph (d)(2) of this AD	As of the effective date of this AD.	Not applicable.

(e) *Can I comply with this AD in any other way?* You may use an alternative method of compliance or adjust the compliance time if:

(1) Your alternative method of compliance provides an equivalent level of safety; and

(2) The Manager, Small Airplane Directorate, approves your alternative. Submit your request through an FAA Principal Maintenance Inspector, who may add comments and then send it to the Manager, Small Airplane Directorate.

Note 1: This AD applies to each airplane identified in paragraph (a) of this AD, regardless of whether it has been modified, altered, or repaired in the area subject to the requirements of this AD. For airplanes that have been modified, altered, or repaired so that the performance of the requirements of this AD is affected, the owner/operator must request approval for an alternative method of compliance in accordance with paragraph (e) of this AD. The request should include an assessment of the effect of the modification, alteration, or repair on the unsafe condition addressed by this AD; and, if you have not eliminated the unsafe condition, specific actions you propose to address it.

(f) *Where can I get information about any already-approved alternative methods of compliance?* Contact Karl Schletzbaum, Aerospace Engineer, FAA, Small Airplane Directorate, 901 Locust, Room 301, Kansas City, Missouri 64106; telephone: (816) 329–4146; facsimile: (816) 329–4090.

(g) *What if I need to fly the airplane to another location to comply with this AD?* The FAA can issue a special flight permit under §§ 21.197 and 21.199 of the Federal Aviation Regulations (14 CFR 21.197 and 21.199) to operate your airplane to a location where you can accomplish the requirements of this AD.

(h) *How do I get copies of the documents referenced in this AD?* You may get copies of the documents referenced in this AD from Dornier Luftfahrt GmbH, Customer Support, P.O. Box 1103, D–82230 Wessling, Federal Republic of Germany; telephone: (08153) 300; facsimile: (08153) 304463. You may view these documents at FAA, Central Region, Office of the Regional Counsel, 901 Locust, Room 506, Kansas City, Missouri 64106.

Note 2: The subject of this AD is addressed in German AD Number 2001–164, dated June 14, 2001.

Issued in Kansas City, Missouri, on September 24, 2001.

Michael Gallagher,

Manager, Small Airplane Directorate, Aircraft Certification Service.

[FR Doc. 01–24560 Filed 10–1–01; 8:45 am]

BILLING CODE 4910–13–U

NATIONAL INDIAN GAMING COMMISSION

25 CFR Part 580

RIN 3141–AA04

Environment, Public Health and Safety

AGENCY: National Indian Gaming Commission.

ACTION: Proposed rule.

SUMMARY: The National Indian Gaming Commission (Commission) proposes regulations to implement a system of oversight to carry out its responsibilities with regard to the provisions of the Indian Gaming Regulatory Act (IGRA) that require tribal gaming facilities to be constructed, maintained and operated in a manner which protects the environment, public health and safety. One of the responsibilities conferred upon the Commission by IGRA is the approval of tribal gaming ordinances, which must contain certain enumerated provisions. IGRA further requires the Commission ensure that these statutorily mandated provisions are implemented by tribal governments.

Among these mandatory provisions is one that requires that the construction and maintenance of the gaming facility, and the operation of that gaming is conducted in a manner that adequately protects the environment and the public health and safety. At present, the Commission does not have in place an appropriate mechanism to carry out its oversight responsibility that follows from the IGRA provision. It is the view of the Commission that the most effective means of ensuring that adequate programs are implemented on an industry wide basis is to promulgate a rule establishing a framework for measuring tribal compliance.

This regulation establishes the Commission's oversight process to ensure that the environment, public health and safety are adequately protected at Indian gaming facilities in accordance with IGRA. The Commission will focus its oversight activities on reviewing tribal compliance with the environment, public health and safety plans submitted by tribal governments. Environment, public health and safety plans will identify the policies, practices, and methods used by the submitting tribal government to ensure that the environment, public health and safety are adequately protected at its gaming facilities.

DATES: Comments may be submitted on or before October 31, 2001.

ADDRESSES: Comments may be mailed to: Environment, Public Health and Safety Comments, National Indian Gaming Commission, 1441 L Street, NW., Suite 9100, Washington, DC 20005, delivered to that address between 8:30 a.m. and 5:30 p.m., Monday through Friday, or faxed to 202/632–7066 (this is not a toll-free number). Comments received may be inspected between 9 a.m. and noon, and between 2 p.m. and 5 p.m., Monday through Friday.

FOR FURTHER INFORMATION CONTACT: Christine Nagle at 202/ 632–7003; fax 202/ 632–7066 (these are not toll-free numbers).

SUPPLEMENTARY INFORMATION: The Indian Gaming Regulatory Act (IGRA, or the Act), enacted on October 17, 1988, established the National Indian Gaming Commission (Commission). Under the Act, the Commission is charged with regulating gaming activities on Indian lands. The Act expressly authorizes the Commission to ''promulgate such regulations and guidelines as it deems appropriate to implement provisions of this [Act].'' 25 U.S.C. 2706(b)(10).

The regulations proposed today would establish a system to implement the Commission's oversight authority in the areas of environment, public health and safety. The statutory basis for this responsibility is set forth in 25 U.S.C. 2710 (b)(2)(E) which provides that tribal ordinances or resolutions submitted for the Chairman's approval ensure that ''the construction and maintenance of the gaming facility, and the operation of that gaming is conducted in a manner which adequately protects the environment and the public health and safety.''

On April 27, 1999, the Commission issued an Advance Notice of Proposed Rulemaking regarding the establishment of environment, public health and safety procedures. After reviewing the information solicited through this notice, the Commission decided to move forward with proposed regulations. In November 1999, a Tribal-Commission Advisory Committee was formed to consult on the project. The Commission attempted to assemble a diverse advisory committee that represented the interests of a broad range of gaming tribal governments. During the period from November 1999 through May 2000, the Commission and the Tribal Advisory Committee met four times to develop a regulatory proposal. The Commission published a Notice of Proposed Rulemaking that appeared in the **Federal Register** at Volume 65, page 45558, on July 24, 2000. In response to the **Federal Register** notice, the Commission received a number of helpful comments suggesting changes to the proposed rule. The Tribal-Commission Advisory Committee met after the close of the public comment period to discuss the comments that had been submitted. Upon consideration of the comments submitted, and discussions with the Tribal-Commission Advisory Committee, the Commission decided to revise the proposed rule and republish the revised rule as a proposed rule.

In proposing this regulation, the Commission is aware that tribal governments take steps to ensure that their gaming facilities are constructed, maintained, and operated in a manner, which protects the environment, and public health and safety. The Commission notes, however, that it lacks the appropriate mechanism to carry out this aspect of its oversight responsibilities. The Commission has a duty to design and implement a viable means of determining whether tribal governments are in compliance with requirements of the Act. Moreover, the absence of a clear standard for compliance creates an impediment to effective enforcement for both tribal governments and the Commission.

Under this regulation, tribal government(s) are encouraged to assume the full responsibility for the development and implementation of environment, public health and safety laws, codes, ordinances and resolutions applicable to their gaming operation(s). Compliance with this rule is met through submission of an environment, public health and safety plan (Plan) which sets forth the tribal government's policies and programs for ensuring that its gaming operations do not pose a threat to the environment, public health and safety. Under this regulation, the Plan is to contain the tribal government's policies for the development, implementation, and enforcement of environmental, public health and safety standards for its gaming operation(s) and describe the tribal government's standards, regulatory structure(s), and enforcement program(s) that ensure the environment, public health and safety of its gaming operation(s) are adequately protected. The Plan will cover emergency preparedness, construction, maintenance and operation, drinking water and food, use, storage and disposal of hazardous materials, and sanitation and waste disposal.

The Commission will review the Plans to ensure that they comply with requirements in this rule. Thereafter, the Commission's role in enforcing compliance with this regulation focuses on the tribal government's compliance with its Plan. This approach enables the Commission to carry out its oversight responsibilities without creating a set of unnecessary requirements that may be inconsistent with existing provisions of tribal law or tribal-state gaming compacts or inappropriate to the geographic or other special conditions in a particular area. The Commission's oversight of such Plans will provide an effective mechanism for ensuring that all tribal gaming facilities are constructed, maintained and operated in the manner required under the Act. Therefore, pursuant to 25 U.S.C. 2710 (b)(2)(E), these regulations are being proposed to establish the adequate protection of the environment, public health and safety at Indian gaming operations regulated by the Act.

Regulatory Flexibility Act

The Commission certifies that this document will not have a significant economic effect on a substantial number of small entities under the Regulatory Flexibility Act (5 U.S.C. 601 *et. seq.*). Indian tribal governments are not considered to be small entities for purposes of the Regulatory Flexibility Act.

Small Business Regulatory Enforcement Fairness Act (SBREFA)

This proposed rule is not a major rule as defined by section 804 of the Small Business Regulatory Enforcement Fairness Act of 1996. This proposed rule will not: (1) Result in an annual effect on the economy of $100 million or more; (2) cause a major increase in costs or prices for consumers, individual industries, Federal, State or local government agencies or geographic regions; and (3) have significant adverse effects on competition, employment, investment, productivity, innovation, or the ability of United States-based enterprises to compete with foreign-based companies in domestic and export markets.

Unfunded Mandates Reform Act

The Commission has determined that this proposed rule does not impose an unfunded mandate on State, local or tribal governments or on the private sector of more than $100 million per year. The Commission has determined that this proposed rule may have a unique effect on tribal governments, as this rule applies exclusively to tribal governments, whenever they undertake the ownership, operation, regulation, or licensing of gaming facilities on Indian lands as defined by the Indian Gaming Regulatory Act. Thus, in accordance with section 203 of the Unfunded Mandates Reform Act, the Commission has developed a small government agency plan that provides tribal governments with adequate notice, opportunity for ''meaningful'' consultation, and information, advice and education on compliance.

The Commission's small government agency plan includes: formation of a tribal advisory committee; discussions with Tribal leaders and tribal associations; preparation of guidance material and model documents; and technical assistance. During the period from November 1999 through May 2000, the Commission and the Tribal Advisory Committee met four times to develop a regulatory proposal. In selecting committee members, consideration was placed on the current level of environmental, public health and safety regulation exercised by the tribal government represented, the applicant's experience in this area, as well as the size of the tribe the nominee represented, geographic location of the gaming operation and the size and type of gaming conducted. The Commission attempted to assemble a committee that incorporates diversity and is representative of Indian gaming interests. Since beginning formulation of this proposed rule, the Commission spoke at three tribal association meetings and held three field consultations with tribal governments. The Commission is in the process of developing guidance materials that will include a model Environment, Public Health and Safety Plan. The Commission will meet with the Tribal Advisory Committee to discuss the public comments that are received as a result of publication of this proposed rule. Lastly, prior to the implementation deadline of this proposed rule, the Commission will hold regional technical assistance workshops.

Paperwork Reduction Act

The Commission is in the process of obtaining clearance from the Office of Management and Budget (OMB) for the information collection requirements contained in this proposed rule, as required by 44 U.S.C. 3501 *et. seq.* The information required to be submitted is identified in § 580.20–580.30, and will be used to determine compliance with this part.

The public reporting burden for this collection of information is estimated to average 150 hours, to initially prepare an Environmental, Public Health and Safety Plan, including the time for reviewing instructions, gathering and maintaining the data needed, and completing and reviewing the collection of information. The Commission estimates that information needed to maintain the Plan will require an annual burden of 190 hours. It is estimated that an additional 21 hours will be required to prepare, and gather the data needed, and to complete the collection of information necessary to prepare for plan renewal. Plans need to be updated every three years.

Public reporting burden for this collection of information is estimated to average 361 hours per year including the time for initial Plan preparation, monitoring, recordkeeping and Plan renewal preparation. The Commission estimates that approximately 198 tribal governments will need to file an Environmental, Public Health and Safety Plan for an annual burden of 71,478 hours.

Send comments regarding this collection of information, including suggestions for reducing the burden to both, Environment, Public Health and Safety Comments, National Indian Gaming Commission, 1441 L Street NW., Suite 9100, Washington, DC 20005; and to the Office of Information and Regulatory Affair, Office of Management and Budget, Washington, DC 20503. The Office of Management and Budget (OMB) has up to 60 days to approve or disapprove the information collection, but may respond after 30 days; therefore public comments should be submitted to OMB within 30 days in order to assure their maximum consideration.

The Commission solicits public comment as to:

a. Whether the collection of information is necessary for the proper performance of the functions of the Commission, and whether the information will have practical utility;

b. The accuracy of the Commission's estimate of the burden of the collection of information, including the validity of the methodology and assumptions used;

c. The quality, utility, and clarity of the information to be collected; and

d. How to minimize the burden of the collection of information on those who are to respond, including the use of appropriate automated electronic, mechanical, or other forms of information technology.

An agency may not conduct, and a person is not required to respond to a collection of information unless it displays a currently valid OMB control number.

National Environmental Policy Act

The Commission has determined that this proposed rule does not constitute a major Federal action significantly affecting the quality of the human environment and that no detailed statement is required pursuant to the National Environmental Policy Act of 1969 (42 U.S.C. 4321 et. seq).

Takings (Executive Order 12630)

The Commission has determined that this proposed rule does not have significant ''takings'' implications. Thus, a takings implications assessment is not required.

Federalism (Executive Order 12612)

The Commission has determined that this proposed rule does not have significant Federalism effects because it pertains solely to Federal-tribal relations and will not interfere with the roles, rights and responsibilities of States.

Civil Justice Reform (Executive Order 12988)

In accordance with Executive Order 12988, the Commission has determined that this proposed rule does not unduly burden the judicial system and meets

the requirements of sections 3(a) and 3(b)(2) of the Order.

Montie R. Deer,

Chairman.

List of Subjects in 25 CFR Part 580

Gambling, Indians-lands, Environment, Health and Safety, Indians-Tribal government.

For the reasons stated in the preamble, the National Indian Gaming Commission proposes to amend 25 CFR by adding a new part 580 as follows:

PART 580—PROTECTING THE ENVIRONMENT, PUBLIC HEALTH, AND SAFETY

Subpart A—Requirement for an Environment, Public Health, and Safety Plan

Sec.
580.2 What is the purpose of this part?
580.3 When does this part apply?
580.4 What is the scope of this part?
580.5 How does a tribal government comply with this part?
580.6 What is the Environment, Public Health, and Safety Plan?
580.7 What is the effect of a tribal government's Compliance with this part?

Subpart B—Contents of an Environment, Public Health and Safety Plan

580.20 What must the tribal government include in its Plan?
580.22 What are some examples of information about emergency preparedness that will help meet the requirements of § 580.20(b)?
580.24 What are some examples of information about construction, maintenance and operation that will help meet the requirements of § 580.20(b)?
580.26 What are some examples of information about drinking water and food that will help meet the requirements of § 580.20(b)?
580.28 What are some examples of information about use, storage, and disposal of hazardous materials that will help meet the requirements of § 580.20(b)?
580.30 What are some examples of information about sanitation and waste disposal that will help meet the requirements of § 580.20(b)?
580.32 May a tribal government assign its Plan compliance functions to another entity?
580.38 What is a Certificate of Assurance?

Subpart C—Plan Submission and Review Process

580.40 When must the tribal government submit its Plan?
580.42 Where is the Plan to be submitted?
580.44 When does a Plan become effective?
580.50 Who will review the Plan?
580.52 What factors will be considered in the review of the Plan?
580.54 What are the steps in the review process?
580.56 What happens when a tribal government submits its Plan to the Commission?
580.58 What happens if the initial evaluation does not result in a finding of compliance?
580.60 What is the process for a formal review of the Plan?
580.62 If the Reviewing Commissioner determines that the Plan does not comply, may the tribal government appeal?
580.64 How will the Commission process an appeal under 580.62?
580.66 What is the status of the Plan if the tribal government does not appeal the Reviewing Commissioner's determination?

Subpart D—Plan Revisions and Updates

580.70 When must a Plan be revised?
580.72 When must a Plan be updated?

Subpart E—Inspections, Enforcement, and Recordkeeping

580.80 When can the Commission conduct an on-site inspection?
580.82 What procedures will the Commission follow in an enforcement action taken pursuant to this part?
580.84 What happens if the Plan is found not to be in compliance following the conclusion of a formal review?
580.86 What are some other examples of violations that may result in an enforcement action?
580.88 If the tribal government has signed a Tribal-State compact, will the tribal government have to comply with two sets of standards?
580.90 Does this part affect the regulatory authority of any other governmental entity or alter tribal-state gaming compacts?
580.92 What records must the tribal government keep?
580.94 How long must the tribal government maintain the types of records outlined in § 580.92?

Authority: 25 U.S.C. 2710.

Subpart A—Requirement for an Environment, Public Health, and Safety Plan

§ 580.2 What is the purpose of this part?

The purpose of this part is to:

(a) Encourage tribal government(s) to exercise regulatory primacy and assume the fullest responsibility for the administration and enforcement of tribal environmental, public health and safety laws, codes, ordinances, and other tribal enactments applicable to gaming operations on Indian lands;

(b) Ensure that tribal gaming facilities are constructed, maintained and operated in a manner that adequately protects the environment, public health and safety as required by the Indian Gaming Regulatory Act (Act); and

(c) Establish the process and criteria used by the Commission in carrying out its statutory oversight responsibility to determine compliance with the sections of an approved tribal gaming ordinance on matters pertaining to the environment, public health and safety.

§ 580.3 When does this part apply?

This part applies when an Indian tribe undertakes the ownership, operation, regulation, or licensing of gaming facilities on Indian lands over which it has jurisdiction, under the provisions of the Act.

§ 580. 4 What is the scope of this part?

This part pertains to the development, regulation, and enforcement of environment, public health and safety standards applicable to a tribal government's gaming operation(s), and covers the area(s) where gaming activities are conducted; parking areas used primarily for gaming patrons; and any other area(s) over which the tribal government's gaming regulatory body has jurisdiction under the tribal government's approved gaming ordinance.

§ 580.5 How does a tribal government comply with this part?

In order to comply with this part, a tribal government will:

(a) Prepare an Environment, Public Health and Safety Plan (Plan) in accordance with § 580.20 of this part;

(b) Submit the Plan to the Commission in accordance with provisions of § 580.40 of this part;

(c) Meet all the requirements contained in this part; and

(d) Comply with the provisions contained in its Plan.

§ 580.6 What is the Environment, Public Health, and Safety Plan?

The Environment, Public Health and Safety Plan is a document that describes the standards, systems, and/or processes used by the submitting tribal government to implement, monitor and enforce the tribal government's environment, public health and safety standards as they pertain to the gaming operation(s) on its Indian lands. The Plan will be used by the Commission in carrying out its oversight responsibility in accordance with 25 U.S.C. § 2710(b)(2)(E).

§ 580.7 What is the effect of a tribal government's compliance with this Part?

Once a Plan is in place, the Commission will focus its oversight activities on: reviewing and processing Plan submissions; monitoring tribal compliance with its Plan; and monitoring the tribal government's response to conditions presenting an imminent threat to the environment, public health and safety. Routine

oversight and enforcement will be considered the primary responsibility of the appropriate tribal governmental agency and/or other entity described in the Plan.

Subpart B—Contents of an Environment, Public Health and Safety Plan

§ 580.20 What must the tribal government include in its Plan?

The Plan must contain the information shown in the following table.

The Plan must address	And each area must contain
(a) Part I. Identifying information	(1) The tribe's name and the name(s) of the gaming operation(s); (2) The owner, operator, licensing body and/or management contractor of the gaming operation(s); (3) The contact person; and (4) A description of the gaming operation(s) including: location(s), size in square feet, days and hours of operation, and maximum occupancy load.
(b) Part II. Substantive Areas: Emergency preparedness (accidents, injuries and medical emergencies; natural and other disasters; fire; security threats); Construction, maintenance and operation; Drinking water and food; Use, storage and disposal of hazardous material; and Sanitation and waste disposal.	(1) Copies or a description of the tribal government's policies, operating procedures, standards, compliance monitoring system, enforcement program(s) and qualified personnel. (2) The official title and responsibilities of each tribal or other entity responsible for carrying out the Plan or parts thereof. (3) A description or copy of pertinent agreements with any non-tribal entity if applicable.
(c) Part III. Supporting Information: Documentation showing that the tribal government has an adequate program(s) to carry out the Plan.	(1) Identification of the written standards the tribal government will use to carry out the provisions of its Plan, including either citations to or copies of the applicable tribal ordinances, resolutions, regulations, management controls, policy and procedures or other governing instruments; (2) Identification of each tribal governing body responsible for administering the Plan, or part thereof; (3) A description or copy of the procedures the tribal government will use to enforce compliance with the Plan; (4) A description or copy of the procedures the tribal government will use to monitor compliance with the Plan, which may include permitting processes, and inspection, license, reporting, monitoring and record keeping requirements; (5) A description of the record keeping system which may contain employee/contractor training, education, certifications, licenses, work experience, and continuing education requirements for each section of the Plan.
(d) Part IV. Certificates of Assurance: Documents certifying that the Plan fairly and accurately describes the standards, processes, and systems used by the tribal government to ensure that gaming operation(s) on Indian lands are constructed, operated, and maintained in a manner that adequately protects the environment, public health and safety.	(1) Certification that the standards identified in the Plan are at least as stringent as applicable federal or other standards commonly used in the surrounding geographic area. (2) Certification that sufficient resources are available to carryout the Plan. (3) Certification that individuals responsible for oversight, planning, and implementation of the Plan have the minimum qualifications necessary to discharge their responsibilities. (4) Certification that the Plan contains a true and accurate description of the standards and systems in place to ensure that the gaming operation(s) is constructed, operated and maintained in a manner that adequately protects the environment, public health and safety; (5) Certification that adequate resources are available to carry out the Plan; and (6) Certification that the standards identified in the Plan have been duly considered by the tribal government and found to be as stringent as federal or other legally applicable standards, and consistent with environment, public health and safety needs and concerns in relation to the gaming operation.

§ 580.22 What are some examples of information about emergency preparedness that will help meet the requirements contained in § 580.20(b)?

The following table shows examples of information that can be included in the Plan to satisfy this requirement.

For	Narrative descriptions of
(a) Accidents, injuries, and medical emergencies.	(1) The steps taken to prevent, prepare for, and respond to accidents, injuries, and medical emergencies; the emergency response system in place, including the availability of trained emergency personnel, ambulance service, medical transport and medical facilities serving the tribal government's gaming operation and identifying information; (2) Other pertinent information or documentation, such as emergency response plans, evacuation policies or procedures, or other similar documents.

For	Narrative descriptions of
(b) Natural and Other Disasters	(1) The steps taken to prepare for and respond to such natural or other disasters with a likelihood of occurrence given the geological or climatic conditions of the area, including evacuation or other special safety procedures, incident response systems or other safety measures in place. (2) Some additional examples of information that might be included depending on the scope and complexity of the operation such as descriptions of back-up communications systems, mock drill schedules, equipment testing back-up power and water systems, and hazardous materials response.
(c) Fire	(1) The steps taken to prevent, prepare for and respond to fire emergencies, including evacuation procedures and alarm systems; (2) Availability of fire fighting services, trained personnel, and fire suppression systems.
(d) Security threats	(1) The steps taken to prepare for and respond to security threats, including bomb threats, unlawful intrusions, criminal acts and other foreseeable security risks; (2) Evacuation procedures or other special precautions; and (3) The availability of law enforcement services.

§ 580.24 What are some examples of information about construction, maintenance and operation that will help meet the requirements of 580.20(b)?

The following table shows examples of the information that can be included in the Plan to satisfy this requirement.

For	Some examples of information that will meet this requirement include
(a) Construction standards	(1) The building code or standards that the tribal government follows; (2) The standard that the tribal government uses for plumbing, electrical and mechanical systems; and (3) The practices that the tribal government follows for managing sediment and stormwater.
(b) Preventative Maintenance and Repair.	(1) Maintenance and inspection schedules for heating and air conditioning systems, elevators, parking areas, and stormwater management facilities; and (2) Procedures and schedules in place for ensuring the safe operation of energy sources used to supply the gaming operation(s) and records systems for inspections, maintenance, and repair.

§ 580.26 What are some examples of information about drinking water and food that will help meet the requirements of § 580.20(b)?

The following table shows information that can be included to satisfy this requirement.

For	Some examples of information that will meet this requirement include
(a) Drinking water	(1) The water system that supplies the gaming operation; (2) The amount of storage maintained and/or whether a back-up source is available; (3) The inspection and testing program, including the responsible entity; and (4) An emergency plan to respond to contamination.
(b) Food Preparation and Handling	(1) The inspection and testing program, including the responsible entity; (2) Measures used to ensure proper temperature control of food; (3) Methods used to educate employees on proper hygienic practices; and (4) Control measures used to prevent food contamination.

§ 580.28 What are some examples of information about use, storage, and disposal of hazardous materials that will help meet the requirements of § 580.20(b)?

The following table shows examples of information that can be included in the Plan to satisfy this requirement. For purposes of this part hazardous material shall mean: paints, solvents, pesticides, cleaning agents, and fuels if they are used as part of the construction, operation or maintenance of the gaming operation.

For	Some examples of information that will meet this requirement include...
(a) Use and handling	(1) Certification, licensing, or other methods used to make sure persons using or handling hazardous materials have been trained appropriately; and (2) A copy of the tribal government's written procedures for use and handling hazardous materials.
(b) Storage	(1) The methods used to control access to hazardous materials; (2) The spill-prevention and response plan; and (3) Methods used to ensure hazardous materials are placed in proper containers and that containers are labeled properly.
(c) Disposal	(1) The guidelines that have been adopted for the proper disposal of hazardous materials; and (2) Any agreements in place with local governments or private contractors.

§ 580.30 What are some examples of information about sanitation and waste disposal that will help meet the requirements of § 580.20(b)?

The following table shows information that can be included to satisfy this requirement.

For	Some examples of information that will meet this requirement include
(a) Solid waste	(1) The methods used to dispose of solid waste; (2) Recycling or pollution prevention plans in place; and (3) Any agreements in place with local governments or private contractors.

For	Some examples of information that will meet this requirement include
(b) Wastewater and Sewage Disposal.	(1) The treatment and/or disposal system being used; (2) Any agreements in place with local government or private contractors; (3) If wastewater is treated or disposed of on-site, the maintenance program for the plant and qualification criteria for plant operators.
(c) Bio-hazard disposal	(1) The disposal program in place; (2) Any agreements in place with local governments or private contractors.

§ 580.32 May a tribal government assign its Plan compliance functions to another entity?

A tribal government may enter into an agreement with a federal, state, or local government or contract with a private entity to provide services or functions necessary to carry out its Plan or any portion thereof. However, this does not relieve the tribal government of its responsibility to comply with the Plan, or any portion thereof. Responsibility to ensure compliance with the Plan rests with the tribal government as the responsible governmental entity.

§ 580.38 What is a Certificate of Assurance?

A Certificate of Assurance is a written pledge from the governing body of a tribe certifying that all requirements of § 580.20 are (or will) be met and that all representations made in the Plan are true and accurate.

Subpart C—Plan Submission and Review Process

§ 580.40 When must the tribal government submit its Plan?

The tribal government must submit its Plan to the Commission as shown in the following table.

If the tribal government's gaming operation is	Then the tribal government must
(a) Already in existence on the effective date of this part.	Submit the tribal government's Plan within twelve (12) months of the effective date of this part.
(b) Under construction on the effective date of this part.	Submit the tribal government's Plan within twelve (12) months of the effective date of this part or at least sixty (60) days before the tribal government opens the gaming operation whichever is later.
(c) Not in existence or under construction on the effective date of this part.	Submit the tribal government's Plan at least sixty (60) days before the tribal government opens the gaming operation.

§ 580.42 Where is the Plan to be submitted?

The Plan is to be submitted by certified mail return receipt requested to: The National Indian Gaming Commission, Environment, Public Health, and Safety, 1441 L Street, NW., Suite 9100, Washington, DC 20005.

§ 580.44 When does a Plan become effective?

A tribal Plan becomes effective on the date it is mailed to the address listed in § 580.42.

§ 580.50 Who will review the Plan?

The Commission shall designate one of its members to oversee the review process and make the initial determination on whether the tribal government's Plan meets the requirements in § 580.20.

§ 580.52 What factors will be considered in the review of the Plan?

The Commission will consider whether the Plan meets the requirements of § 580.20 and contains all the required certificates of assurance.

§ 580.54 What are the steps in the review process?

The review process may include three phases: an initial evaluation, a formal review by the Commissioner designated to conduct the review, and an appeal to the full Commission. A Plan may be found to comply with the requirements of this part in any phase of the review process and upon determination of compliance the review is complete.

§ 580.56 What happens when a tribal government submits its Plan to the Commission?

On the intial submission the Plan is evaluated for completeness in accordance with § 580.20. If the Plan complies with the requirements of this part, the Reviewing Commissioner will notify the tribal government that the Plan is compliant and that the review process is concluded. As part of the initial evaluation the Reviewing Commissioner may also:

(a) Request any additional information needed to complete the evaluation;

(b) Consult with tribal entities or other entities identified in the Plan to clarify information contained therein;

(c) Conduct on site inspections where appropriate.

§ 580.58 What happens if the initial evaluation does not result in a finding of compliance?

If the initial evaluation does not result in a finding of compliance, the Reviewing Commissioner will notify the tribal government that the Plan does not appear to address the factors specified in § 580.20 and indicate the part(s) of the Plan that require revision and further advise the tribal government that the Plan will be considered in a formal review process if revisions are not submitted within ninety (90) days.

§ 580.60 What is the process for a formal review of the Plan?

The formal review process commences when the Reviewing Commissioner notifies the tribal government by certified mail that the Plan does not appear to be compliant and has been referred for formal review. During the formal review process, the Reviewing Commissioner will:

(a) Examine any further submissions from the tribal government and conduct further consultations with the tribal government if such consultations appear useful;

(b) Prepare an administrative record based on the Plan;

(c) Based on the administrative record decide whether the Plan is compliant;

(d) After considering the matter, inform the tribal government in writing whether, in the opinion of the Reviewing Commissioner, the Plan complies with the factors specified in § 580.20;

(e) If the Plan does not comply with these factors include with the written determination:

(1) A description of those aspects in the Plan, which make the Plan unsatisfactory;

(2) The steps the tribal government must take for the Plan to be considered satisfactory;

(3) A schedule for corrective action and resubmission of the Plan;

(4) A statement regarding the tribal government's opportunity to appeal the matter to the full Commission.

(f) The formal review process will be concluded within ninety (90) days from the date of the notice.

§ 580.62 If the Reviewing Commissioner determines that the Plan does not comply, may the tribal government appeal?

Yes. A tribal government may appeal the Reviewing Commissioner's determination that the Plan does not comply to the full Commission. Such an appeal shall be filed in writing within thirty (30) days after the Reviewing Commissioner serves the determination letter under part 519 of this chapter, unless that time is extended by the Commission at the request of the tribal government. An appeal shall state why the tribal government believes the Reviewing Commissioner's determination to be erroneous, and shall include supporting documentation, if any. Failure to file an appeal within the time provided by this section shall result in a waiver of the opportunity for an appeal.

§ 580.64 How will the Commission process an appeal under 580.62?

The Commission may decide the appeal based only on a review of the record before it or may initiate further consultation discussions if requested by the tribal government, before deciding the appeal. The decision on appeal shall require a majority vote of the Commissioners. The Commission shall advise the tribal government of its decision in writing.

§ 580.66 What is the status of the Plan if the tribal government does not appeal the reviewing Commissioner's determination?

If a tribal government does not appeal the determination of the Reviewing Commissioner, the Reviewing Commissioner's determination completes the formal review process and that determination becomes the decision of the Commission as to whether the Plan complies with the factors established under § 580.52.

Subpart D—Plan Revisions and Updates

§ 580.70 When must a Plan be revised?

A tribal government should keep its Plan current and revise its Plan whenever a material change affects the tribal government's ability to carryout the Plan. Some examples include, but are not limited to:

(a) Substantial changes in tribal codes, ordinances, regulations, or compact provisions;

(b) Substantial changes to or termination of intergovernmental agreements;

(c) Structural expansions, renovations, or modifications of the gaming operation(s);

(d) Construction of a new gaming operation;

(e) Changes in the tribal regulatory structure or enforcement programs identified in the Plan; or

(f) Managerial changes that substantially affect or alter the practices, procedures, or systems contained in the Plan.

§ 580.72 When must a Plan be updated?

(a) A tribal government must review and update its Plan every three years. The updated Plan should reflect any changes to the Plan during the Plan review period and in the three-year period before the review.

(b) The Commission will send a notice to the tribal government informing the tribal government that it needs to review and update its Plan. Within 90 days, of receipt of this notice, a tribal government must submit its updated Plan to the Commission. If none of the information contained in the tribal government's Plan has changed the tribal government must notify the Commission in writing that it has completed a review of its Plan and that no changes to the Plan have been made.

Subpart E—Inspections, Enforcement, and Recordkeeping

§ 580.80 When can the Commission conduct an on-site inspection?

Under its enforcement authority set forth in 25 CFR 571.5, the Commission may conduct an on-site inspection:

(a) At any time to ensure compliance with the Plan;

(b) If the Commission conducts a routine investigation not related to environmental, public health and safety issues, and discovers a condition that needs investigation;

(c) If the tribal government's Plan raises concerns that an area of the environment, public health or safety is not being adequately addressed; or

(d) When an emergency situation exists at a gaming operation.

§ 580.82 What procedures will the Commission follow in an enforcement action taken pursuant to this part?

The Commission will follow the enforcement procedures set forth in 25 CFR part 573.

§ 580.84 What happens if the Plan is found not to be in compliance following the conclusion of a formal review?

If a tribal government operating a gaming facility fails to bring its Plan into compliance following the Commission's decision an enforcement action under 25 CFR part 573 may be initiated.

§ 580.86 What are some other examples of violations that may result in an enforcement action?

(a) Failure to submit a Plan as required by this part;

(b) Failure to comply with the Plan that the tribal government has adopted;

(d) Operation of a gaming facility without regard to a Plan approved by the tribal government which adequately protects the environment or public health and safety;

(e) Failure to correct deficiencies discovered during a compliance review by the Commission; or

(f) Misrepresentations of any fact or assertion made in the Plan under §§ 580.20, and 580.52 upon which the Commission relied in granting approval of a Plan.

§ 580.88 If the tribal government has signed a Tribal-State compact, will the tribal government have to comply with two sets of standards?

No. When standards are contained in Tribal-State compacts those standards can be used to comply with this part.

§ 580.90 Does this part affect the regulatory authority of any other governmental entity or alter tribal-state gaming compacts?

No. Nothing in this part is intended to:

(a) Reduce, diminish, or otherwise alter the regulatory authority of any other Federal, State, or tribal governmental entity; or

(b) Amend or require amendment(s) to any tribal-state gaming compact(s).

§ 580.92 What records must the tribal government keep?

The tribal government must keep sufficient records to verify compliance with its Plan including any records the tribal government has identified in its Plan under § 580.20, or otherwise required by federal law, to carry out provisions of this part.

For	Such records including updates, for example
(a) Emergency Preparedness; Drinking Water and Food; Use, Storage & Disposal of Hazardous Materials; Sanitation and Waste Disposal; and Maintenance and Operations..	(1) Copies of policies, procedures and standards described or identified in the tribal government's Plan. (2) Employee training, education, certifications, licenses, and work experience Monitoring and test results such as: (i) Emergency equipment inspection; (ii) Drills; (iii) Fire suppression systems; (iv) Water quality testing; (v) Alarm systems. (4) Inspection Reports such as: (i) Health; (ii) Fire; (iii) Sanitation; (iv) Chemical handling; (v) Insurance; (vi) Safety; (vii) Wastewater; (viii) Maintenance. (5) Enforcement records such as: (i) Notices of violations; (ii) Corrective action records; (iii) Sanctions; (iv) Personnel actions; (v) Final dispositions of enforcement actions. (6) Such environmental records relating to disposal of hazardous materials and waste, protection of the environment, or otherwise required by federal law to carry out provisions of this part.
(b) Construction	Requirements for record retention for construction may be satisfied by: certificates of occupancy, certificates from independent qualified inspectors, or individual construction records.

§ 580.94 How long must the tribal government maintain the types of records outlined in § 580.92?

The tribal government must retain the types of records identified in § 580.92 for a period of three years, following the year to which they relate unless a longer period of time is specified by some other provision of law.

[FR Doc. 01–24465 Filed 10–1–01; 8:45 am]

BILLING CODE 7565–01–P

ENVIRONMENTAL PROTECTION AGENCY

40 CFR Part 51

[AD–FRL–7070–8]

Proposed Guidelines for Best Available Retrofit Technology (BART) Determinations Under the Regional Haze Regulations

AGENCY: Environmental Protection Agency (EPA).

ACTION: Proposed rule; extension of public comment period.

SUMMARY: The EPA is announcing the extension of the public comment period on the proposed guidelines for implementation of the best available retrofit technology (BART) requirements under the regional haze rule. The EPA originally requested comments on the proposed rule by September 18, 2001 (66 FR 38108, July 20, 2001). We are extending this deadline to October 5, 2001. We are requesting written comments by October 5, 2001.

ADDRESSES: *Docket.* Information related to the BART guidelines is available for inspection at the Air and Radiation Docket and Information Center, Docket No. A–2000–28. The docket is located at the U.S. Environmental Protection Agency, 401 M Street, SW, Room M–1500, Washington, DC 20460, telephone (202) 260–7548. The docket is available for public inspection and copying between 8:00 a.m. and 5:30 p.m., Monday through Friday, excluding legal holidays. A reasonable fee may be charged for copying.

You should submit comments on the proposed BART guidelines and the materials referenced therein (in duplicate, if possible) to the Air and Radiation Docket and Information Center (6102), Attention: Docket No. A–2000–28, U.S. Environmental Protection Agency, 1200 Pennsylvania Avenue, NW, Washington, DC 20460. You may also submit comments to EPA by electronic mail at the following address: *A-and-R-Docket@epamail.epa.gov.* Electronic comments must be submitted as an ASCII file avoiding the use of special characters and any form of encryption. All comments and data in electronic form must be identified by the docket number A–2000–28. Electronic comments on this proposed rule also may be filed online at many Federal Depository Libraries.

FOR FURTHER INFORMATION CONTACT: Tim Smith (telephone 919-541–4718), EPA, Air Quality Strategies and Standards Division, MD–15, Research Triangle Park, North Carolina, 27711. Internet address: *smith.tim@epa.gov.*

List of Subjects in 40 CFR Part 51

Environmental protection, Administrative practice and procedure, Air pollution control, Carbon monoxide, Nitrogen dioxide, Particulate matter, Sulfur oxides, Volatile organic compounds.

Dated: September 25, 2001.

Jeffrey R. Holmstead,

Assistant Administrator for Air and Radiation.

[FR Doc. 01–24589 Filed 10–1–01; 8:45 am]

BILLING CODE 6560–50–P

ENVIRONMENTAL PROTECTION AGENCY

40 CFR Part 63

[DE001–1001; FRL–7056–8]

Approval of Section 112(l) Authority for Hazardous Air Pollutants; State of Delaware; Department of Natural Resources and Environmental Control

AGENCY: Environmental Protection Agency (EPA).

ACTION: Proposed rule.

SUMMARY: EPA is proposing to approve the Delaware Department of Natural Resources and Environmental Control's (DNREC's) request to implement and enforce its hazardous air pollutant

general provisions and hazardous air pollutant emission standards for perchloroethylene dry cleaning facilities, hard and decorative chromium electroplating and chromium anodizing tanks, and industrial process cooling towers in place of similar Federal requirements set forth in the Code of Federal Regulations. This proposed approval includes granting authority to DNREC to implement and enforce any future amendments to these provisions and standards that EPA promulgates and DNREC adopts unchanged into its regulations. EPA is not waiving its notification and reporting requirements under this proposed approval; therefore, sources will need to send notifications and reports to both DNREC and EPA. In the Final Rules section of this **Federal Register**, EPA is approving the State's request for rule approval as a direct final rule without prior proposal because the Agency views this as a noncontroversial submittal and anticipates no adverse comments. A detailed rationale for the approval is set forth in the direct final rule. If no adverse comments are received in response to this action, no further activity is contemplated. If EPA receives adverse comments, the direct final rule will be withdrawn and all public comments received will be addressed in a subsequent final rule based on this proposed rule. EPA will not institute a second comment period. Any parties interested in commenting on this action should do so at this time.

DATES: Written comments must be received on or before November 1, 2001.

ADDRESSES: Written comments on this action should be sent concurrently to: Makeba A. Morris, Chief, Permits and Technical Assessment Branch, Mail Code 3AP11, Air Protection Division, U.S. Environmental Protection Agency, Region III, 1650 Arch Street, Philadelphia, PA 19103–2029 and Robert Taggart, Delaware Department of Natural Resources and Environmental Control, Division of Air and Waste Management, 715 Grantham Lane, New Castle, DE 19720. Copies of the documents relevant to this action are available for public inspection during normal business hours at the Air Protection Division, U.S. Environmental Protection Agency, Region III, 1650 Arch Street, Philadelphia, Pennsylvania 19103; the Air and Radiation Docket and Information Center, U.S. Environmental Protection Agency, 401 M Street, SW, Washington, DC 20460; and Delaware Department of Natural Resources & Environmental Control, Division of Air and Waste Management, 715 Grantham Lane, New Castle, DE 19720.

FOR FURTHER INFORMATION CONTACT: Dianne J. McNally, U.S. Environmental Protection Agency, Region 3, 1650 Arch Street (3AP11), Philadelphia, PA 19103–2029, *mcnally.dianne@epa.gov* (telephone 215–814–3297).

SUPPLEMENTARY INFORMATION: For further information on this action, pertaining to the approval of Delaware's regulations for hazardous air pollutant general provisions and hazardous air pollutant emission standards for perchloroethylene dry cleaning facilities, hard and decorative chromium electroplating and chromium anodizing tanks, and industrial process cooling towers (CAA section 112), please see the information provided in the direct final action, with the same title, that is located in the ''Rules and Regulations'' section of this **Federal Register** publication.

Dated: September 7, 2001.

Donald S. Welsh,

Regional Administrator, Region III.

[FR Doc. 01–24201 Filed 10–1–01; 8:45 am]

BILLING CODE 6560–50–P

ENVIRONMENTAL PROTECTION AGENCY

40 CFR Part 70

[AZ042–OPP; FRL–7071–6]

Clean Air Act Proposed Full Approval of Operating Permit Programs; Arizona Department of Environmental Quality, Arizona

AGENCY: Environmental Protection Agency (EPA).

ACTION: Proposed rule.

SUMMARY: EPA is proposing to approve revisions to the Arizona Department of Environmental Quality (ADEQ or State) operating permit program. The ADEQ operating permit program was submitted in response to the directive in the 1990 Clean Air Act (CAA) Amendments that permitting authorities develop, and submit to EPA, programs for issuing operating permits to all major stationary sources and to certain other sources within the permitting authorities' jurisdiction. EPA granted interim approval to the ADEQ operating permit program on October 30, 1996 (61 FR 55910). The ADEQ has revised its program to satisfy the conditions of the interim approval and this action proposes approval of those revisions and other revisions since interim approval was granted. EPA is proposing full approval of the operating permits program submitted by ADEQ based on the revisions submitted on August 11, 1998, May 9, 2001, and September 7, 2001.

DATES: Comments on the program revisions discussed in this proposed action must be received in writing by November 1, 2001.

ADDRESSES: Written comments on this action should be addressed to Gerardo Rios, Acting Chief, Permits Office, Air Division (AIR–3), EPA Region IX, 75 Hawthorne Street, San Francisco, California, 94105. You can inspect copies of ADEQ's submittal and other supporting documentation relevant to this action during normal business hours at the Air Division of EPA Region 9, 75 Hawthorne Street, San Francisco, California, 94105. You may also see copies of the submitted title V program at the following location: ADEQ Department of Environmental Quality, 3033 North central Avenue, Phoenix, Arizona 85012–2809.

FOR FURTHER INFORMATION CONTACT: Ginger Vagenas, EPA Region IX, Permits Office (AIR–3), U.S. Environmental Protection Agency, Region IX, (415) 744–1252 or vagenas.ginger@epa.gov.

SUPPLEMENTARY INFORMATION: This section provides additional information by addressing the following questions:

I. What is the operating permit program?
II. What is EPA's proposed action?
III. What are the program changes that EPA is approving?
IV. What is the effect of this proposed action?
V. Are there other issues with the program?

I. What Is the Operating Permit Program?

The CAA Amendments of 1990 required all state and local permitting authorities to develop operating permit programs that met certain federal criteria. In implementing the operating permit programs, the permitting authorities require certain sources of air pollution to obtain permits that contain all applicable requirements under the CAA. The focus of the operating permit program is to improve compliance by issuing each source a permit that consolidates all of the applicable CAA requirements into a federally enforceable document. By consolidating all of the applicable requirements for a facility, the source, the public, and the permitting authorities can more easily determine what CAA requirements apply and how compliance with those requirements is determined.

Sources required to obtain an operating permit under this program include ''major'' sources of air pollution and certain other sources specified in the CAA or in EPA's implementing

regulations. For example, all sources regulated under the acid rain program, regardless of size, must obtain permits. Examples of major sources include those that have the potential to emit 100 tons per year or more of volatile organic compounds, carbon monoxide, lead, sulfur dioxide, nitrogen oxides (NO_X), or particulate matter (PM_{10}); those that emit 10 tons per year of any single hazardous air pollutant (specifically listed under the CAA); or those that emit 25 tons per year or more of a combination of hazardous air pollutants (HAPs). In areas that are not meeting the national ambient air quality standards for ozone, carbon monoxide, or particulate matter, major sources are defined by the gravity of the nonattainment classification. For example, in ozone nonattainment areas classified as ''serious,'' major sources include those with the potential of emitting 50 tons per year or more of volatile organic compounds or nitrogen oxides.

II. What Is EPA's Proposed Action?

Because the operating permit program originally submitted by ADEQ substantially, but not fully, met the criteria outlined in the implementing regulations codified at 40 Code of Federal Regulations (CFR) part 70, EPA granted interim approval to the program in a rulemaking published on October 30, 1996 (61 FR 55910). The interim approval notice described the conditions that had to be met in order for the ADEQ program to receive full approval. Today's **Federal Register** notice describes the changes ADEQ has made to its operating permit program to correct conditions and obtain full approval.

EPA is proposing full approval of the operating permits program submitted by ADEQ based on the revisions submitted on August 11, 1998, May 9, 2001, and September 7, 2001. These revisions satisfactorily address the program deficiencies identified in EPA's October 30, 1996 rulemaking. *See* 61 FR 55910. EPA is also proposing to approve, as a title V operating permit program revision, additional changes to the rules that have been made since ADEQ was granted interim approval. The interim approval issues, ADEQ's corrections, and the additional changes are described below under the section entitled, ''What are the program changes that EPA is approving?'

III. What Are the Program Changes That EPA Is Approving?

A. Corrections to Interim Approval Issues

In its October 30, 1996 rulemaking, EPA made full approval of ADEQ's operating permit programs contingent upon the correction of a number of interim approval issues. Each issue, along with the State's correction, is described below.

1. *Rule deficiency:* AAC R18–2–101(61)(b) (part of the definition of ''major source'') did not clearly require that fugitive emissions of HAPs be included when determining a source's potential to emit. In order to correct the deficiency, the definition needed to be revised so that it would be clear that fugitive emissions of HAPs must be considered in determining whether the source is major for purposes of both the 10 ton per year and 25 ton per year HAP major source thresholds. *See* 40 CFR 70.2.

Rule change: The definition of major source has been revised to correct the deficiency. It now defines a major source under section 112 of the CAA to include, ''for pollutants other than radionuclides, any stationary source that emits, or has the potential to emit, in the aggregate and including fugitive emissions, 10 tons per year or more of any hazardous air pollutant which has been listed pursuant to section 112(b) of the CAA, 25 tons per year of any combination of such hazardous air pollutants * * *.'' (Emphasis added.)

2. *Rule deficiency:* EPA found that ADEQ's regulations regarding the application content and permit issuance requirements for previously minor sources that were applying for title V status to be somewhat unclear. In order to correct this problem, EPA required that the State revise AAC R18 to clarify that, when an existing source obtains a significant permit revision to revise its permit from a Class II permit to a Class I permit, the entire permit, and not just the portion being revised, must be issued in accordance with part 70 permit application, content, and issuance requirements, including requirements for public, affected state, and EPA review. *See* 40 CFR 70.7.

Rule changes: R18–2–320(E) and R18–2–304(E)(1) have been revised to address the interim approval issue. These provisions now clearly require that a previously minor source that is obtaining a title V permit must submit a full title V permit application and undergo full public, EPA and affected state review.

3. *Rule deficiency:* Section 70.6(a)(8) requires that title V permits contain a provision that ''no permit revision shall be required under any approved economic incentives, marketable permits, emissions trading and other similar programs or processes for changes that are provided for in the permit.'' AAC R18–2–306(A)(10) included this exact provision but also included a sentence that negated this provision. EPA required that ADEQ either delete or revise the negating sentence to make the rule consistent with part 70.

Rule change: The problematic sentence has been deleted from the State's rule.

4. *Rule deficiency:* Section 70.4(b)(12) allows sources to make changes within a permitted facility without requiring a permit revision, if the changes are not modifications under any provision of title I of the Act and the changes do not exceed the emissions allowable under the permit. The State's rules provided for such permit conditions but did not restrict the allowable changes to those that are not modifications under title I of the Act and those that do not exceed the emissions allowable under the permit. ADEQ was required revise AAC R18–2–306(A)(14) to add these conditions.

Rule change: AAC R18–2–306(A)(14) now includes the following language: ''Changes made under this paragraph (14) shall not include modification under any provision of Title I of the Act and may not exceed emissions allowable under the permit.''

5. *Rule deficiency:* Pursuant to 70.6(g), operating permit programs may only provide for an affirmative defense to actions brought for noncompliance with technology-based emission limits when such noncompliance is due to an emergency situation. In its original title V program submittal, ADEQ included AAC R18–2–310, which established an affirmative defense that was broader than that allowed under part 70. ADEQ was required to modify its program to make it consistent with the section 70.6(g) provision for an emergency affirmative defense.

Rule change: ADEQ has submitted a program revision that, when approved by EPA, will remove R18–2–310 from the State's title V program.

6. *Rule deficiency:* In order to ensure that material permit conditions can be contained in permits issued by the county control officers as well as the Director of ADEQ, EPA required that ADEQ revise AAC R18–2–331(A)(1) to provide under the definition of ''material permit condition'' that ''the condition is in a permit or permit revision issued by the Director or the Control Officer * * *.''

Rule change: The Rule has been modified as required.

B. Other Changes

The rules the State has submitted for EPA approval incorporate changes other than those necessary to correct interim approval deficiencies. In this action, EPA is also proposing to approve those additional program changes made by ADEQ since the interim approval was granted. We have evaluated the additional changes and, with one exception that is described in detail below, find that they are consistent with part 70. We are including the additional changes in our proposed approval.

Paragraph (c) of ADEQ's definition of major source (R18–2–101(64)) lists source categories that must count fugitives. Subparagraph xxvii has been modified to read: ''All other stationary source categories regulated by a standard promulgated as of August 7, 1980 under section 111 or 112 of the Act, but only with respect to those air pollutants that have been regulated for that category.'' Emphasis added. The addition of this 1980 cutoff date restricts the types of sources that are required to count fugitives towards the major source threshold. This is inconsistent with part 70 and is not currently approvable. EPA has, however, proposed a revision to the major source definition that will incorporate the 1980 cutoff date. We are therefore proposing to approve the State's definition of major source provided that EPA finalizes revisions to the part 70 program that will make the change approvable. Alternatively, if EPA does not finalize the changes to part 70 described above, ADEQ's major source definition will conflict with the operative version of part 70 and we will be unable to approve it. The remedy to one of ADEQ's interim approval issues resides within that same definition, so if we are barred from approving ADEQ's new major source definition because of the 1980 date, we will be unable to grant full approval to ADEQ's title V program. As a result, ADEQ would lose its authority to implement its title V operating permits program on December 1, 2001, and part 71 would be in effect.

ADEQ made a number of additional changes to the rules that implement their part 70 program, many of which were non-substantive (e.g., recodifications) or irrelevant (e.g., changes to requirements applying to non-title V sources). A general description of the more substantive changes follows. For more detail on the all of the changes, refer to the technical support document.

Several provisions implementing the compliance assurance monitoring requirements of 40 CFR part 64 have been added to ADEQ's rules. Additional changes were made to expand application processing requirements and permit content provisions to cover voluntarily accepted emission limitations. The rules have also been modified to specify that noncompliance with any federally enforceable requirement is a violation of the Clean Air Act and to designate terms and conditions that are voluntarily entered into as federally enforceable.

IV. What Is the Effect of This Proposed Action?

ADEQ has adopted and submitted rule changes and requested program revisions that address the issues identified in EPA's interim approval and are described above. The rules proposed for approval today listed in Table 1.

TABLE 1.—SUBMITTED RULES

Rule No.	Rule title	Effective	Submitted
R18–2–101(61)	Definitions—definition of ''Major source'' only	6/4/98	8/11/98
R18–2–304	Permit application processing procedures	12/20/99	5/9/01
R18–2–306	Permit contents	6/4/98	8/11/98
R18–2–320	Significant Permit Revisions	12/20/99	5/9/01
R18–2–331	Material Permit Conditions	6/4/98	8/11/98

In addition to proposing to approve the rules listed in Table 1, EPA is also proposing to approve the removal of R18–2–310, Excess Emissions, from the State's title V program.

As noted above, ADEQ has adopted and submitted the required changes and has fulfilled the conditions of the interim approval granted on October 30, 1996 (61 FR 55910). EPA is therefore proposing full approval of the ADEQ operating permit program, contingent on EPA finalizing its proposed change to the part 70 definition of major source.

V. Are There Other Issues With This Program?

On May 22, 2000, EPA promulgated a rulemaking that extended the interim approval period of 86 operating permits programs until December 1, 2001. (65 FR 32035) The action was subsequently challenged by the Sierra Club and the New York Public Interest Research Group (NYPIRG). In settling the litigation, EPA agreed to publish a notice in the **Federal Register** that would alert the public that they may identify and bring to EPA's attention alleged programmatic and/or implementation deficiencies in title V programs and that EPA would respond to their allegations within specified time periods if the comments were made within 90 days of publication of the **Federal Register** notice.

One citizen's group commented on what it believes to be deficiencies with respect to ADEQ's title V program. EPA takes no action on those comments in today's action and will respond to them by December 1, 2001. As stated in the **Federal Register** notice published on December 11, 2000, (65 FR 77376) EPA will respond by December 1, 2001 to timely public comments on programs that have obtained interim approval, and EPA will respond by April 1, 2002 to timely comments on fully approved programs. We will publish a notice of deficiency (NOD) when we determine that a deficiency exists, or we will notify the commenter in writing to explain our reasons for not making a finding of deficiency. An NOD will not necessarily be limited to deficiencies identified by citizens and may include any deficiencies that we have identified through our program oversight.

Request for Public Comments

EPA requests comments on the program revisions discussed in this proposed action. Copies of the ADEQ submittals and other supporting documentation used in developing the proposed full approval are contained in docket files maintained at the EPA Region 9 office. The docket is an organized and complete file of all the information submitted to, or otherwise considered by, EPA in the development of this proposed full approval. The primary purposes of the docket are: (1) To allow interested parties a means to identify and locate documents so that they can effectively participate in the approval process, and (2) to serve as the

record in case of judicial review. EPA will consider any comments received in writing by November 1, 2001.

Administrative Requirements

Under Executive Order 12866, ''Regulatory Planning and Review'' (58 FR 51735, October 4, 1993), this proposed action is not a ''significant regulatory action'' and therefore is not subject to review by the Office of Management and Budget. Under the Regulatory Flexibility Act (5 U.S.C. 601 *et seq.*) the Administrator certifies that this proposed rule will not have a significant economic impact on a substantial number of small entities because it merely approves state law as meeting federal requirements and imposes no additional requirements beyond those imposed by state law. This rule does not contain any unfunded mandates and does not significantly or uniquely affect small governments, as described in the Unfunded Mandates Reform Act of 1995 (Public Law 104–4) because it proposes to approve pre-existing requirements under state law and does not impose any additional enforceable duties beyond that required by state law. This rule also does not have tribal implications because it will not have a substantial direct effect on one or more Indian tribes, on the relationship between the Federal Government and Indian tribes, or on the distribution of power and responsibilities between the Federal Government and Indian tribes, as specified by Executive Order 13175, ''Consultation and Coordination with Indian Tribal Governments'' (65 FR 67249, November 9, 2000). This rule also does not have Federalism implications because it will not have substantial direct effects on the States, on the relationship between the national government and the States, or on the distribution of power and responsibilities among the various levels of government, as specified in Executive Order 13132, ''Federalism'' (64 FR 43255, August 10, 1999). The rule merely proposes to approve existing requirements under state law, and does not alter the relationship or the distribution of power and responsibilities between the State and the Federal government established in the Clean Air Act. This proposed rule also is not subject to Executive Order 13045, ''Protection of Children from Environmental Health Risks and Safety Risks'' (62 FR 19885, April 23, 1997) or Executive Order 13211, ''Actions Concerning Regulations That Significantly Affect Energy Supply, Distribution, or Use'' (66 FR 28355 (May 22, 2001), because it is not a significantly regulatory action under Executive Order 12866. This action will not impose any collection of information subject to the provisions of the Paperwork Reduction Act, 44 U.S.C. 3501 *et seq.*, other than those previously approved and assigned OMB control number 2060–0243. For additional information concerning these requirements, see 40 CFR part 70. An agency may not conduct or sponsor, and a person is not required to respond to, a collection of information unless it displays a currently valid OMB control number.

In reviewing State operating permit programs submitted pursuant to Title V of the Clean Air Act, EPA will approve State programs provided that they meet the requirements of the Clean Air Act and EPA's regulations codified at 40 CFR part 70. In this context, in the absence of a prior existing requirement for the State to use voluntary consensus standards (VCS), EPA has no authority to disapprove a State operating permit program for failure to use VCS. It would thus be inconsistent with applicable law for EPA, when it reviews an operating permit program, to use VCS in place of a State program that otherwise satisfies the provisions of the Clean Air Act. Thus, the requirements of section 12(d) of the National Technology Transfer and Advancement Act of 1995 (15 U.S.C. 272 note) do not apply.

List of Subjects in 40 CFR Part 70

Environmental protection, Administrative Practice and Procedure, Air pollution control, Intergovernmental relations, Operating permits, Reporting and recordkeeping requirements.

Dated: September 17, 2001.

Jane Diamond,

Acting Regional Administrator, Region IX.

[FR Doc. 01–24596 Filed 10–1–01; 8:45 am]

BILLING CODE 6560–50–P

FEDERAL COMMUNICATIONS COMMISSION

47 CFR Part 64

[CC Docket No. 00–175; FCC 01–261]

2000 Biennial Regulatory Review Separate Affiliate Requirements of Independent Local Exchange Carriers

AGENCY: Federal Communications Commission.

ACTION: Proposed rule.

SUMMARY: This document institutes a broad-based reexamination of part 64, subpart T of the Commission's rules, which establishes safeguards for the provision of in-region interexchange services by incumbent independent local exchange carriers. In this document the Commission invites comment on whether the benefits of the separate affiliate requirement for facilities-based providers continue to outweigh the costs and whether there are alternative safeguards that are as effective but impose fewer regulatory costs.

DATES: Comments due on or before November 1, 2001 and Reply Comments due on or before November 23, 2001.

FOR FURTHER INFORMATION CONTACT: Jessica Rosenworcel, Attorney Advisor, Policy and Program Planning Division, Common Carrier Bureau, (202) 418–1580.

SUPPLEMENTARY INFORMATION: This is a summary of the Commission's Notice of Proposed Rulemaking (NPRM) in CC Docket No. 01–175, FCC 01–261, adopted September 13, 2001, and released September 14, 2001. The complete text of this Notice of Proposed Rulemaking is available for inspection and copying during normal business hours in the FCC Reference Information Center, Portals II, 445 12th Street, SW., Room CY–A257, Washington, DC 20554. This document may also be purchased from the Commission's duplicating contractor, Qualex International, Portals II, 445 12th Street, SW., Room CY–B402, Washington, DC 20554, telephone 202–863–2893, facsimile 202–863–2898, or via e-mail *qualexint@aol.com.* It is also available on the Commission's website at *http://www.fcc.gov.*

Synopsis of the Notice of Proposed Rulemaking

1. Under § 64.1903 of the Commission's rules, incumbent independent local exchange carriers (LECs) providing facilities-based, in-region, interexchange service must do so through a separate corporate affiliate. In this document the Commission invites interested parties to comment on whether application of the separate affiliate requirement for incumbent independent LECs continues to serve the public interest. The Commission first asks a series of questions intended to elicit information regarding the number of incumbent independent LECs providing in-region, interexchange service on either a facilities or resale basis. In addition, the Commission asks for comment on whether or not the benefits of this separate affiliate requirement outweigh the regulatory and economic costs involved. Finally, the Commission seeks comment on possible alternative safeguards, including proposals for applying the

separate affiliate requirement to a more limited category of incumbent independent LECs.

Initial Regulatory Flexibility Analysis

2. As required by the Regulatory Flexibility Act (RFA), as amended,[1] the Commission has prepared this Initial Regulatory Flexibility Analysis (IRFA) of the expected economic impact on small entities by the policies and rules proposed in this NPRM. Written public comments are requested on this IRFA. Comments must be identified as responses to the IRFA and must be filed by the deadlines for comments on the NPRM. The Commission will send a copy of the NPRM, including this IRFA, to the Chief Counsel for Advocacy of the Small Business Administration.

Need for, and Objectives of, the Proposed Rules

3. In this NPRM, the Commission seeks comment on whether or not the benefits of its separate affiliate requirement for in-region interexchange service provided by incumbent independent LECs continues to outweigh the costs and whether or not there are alternative safeguards that are as effective but impose fewer regulatory costs.[2]

Legal Basis

4. The legal basis for any action that may be taken pursuant to the NPRM is contained in sections 4, 201–202, 303 and 403 of the Communications Act of 1934, as amended, 47 U.S.C. 154, 201–202, 303, and 403, and sections 1.1, 1.411, and 1.412 of the Commission's rules, 47 CFR 1.1, 1.411, and 1.412.

Description and Estimate of the Number of Small Entities to Which the Proposed Rules Will Apply

5. The RFA directs agencies to provide a description of and, where feasible, an estimate of the number of small entities that will be affected by any rules.[3] The RFA generally defines the term ''small entity'' as having the same meaning as the terms ''small business,'' ''small organization,'' and ''small governmental jurisdiction.''[4] For the purposes of this order, the RFA defines a ''small business'' to be the same as a ''small business concern'' under the Small Business Act, 15 U.S.C. 632, unless the Commission has developed one or more definitions that are appropriate to its activities.[5] Under the Small Business Act, a ''small business concern'' is one that: (1) Is independently owned and operated; (2) is not dominant in its field of operation; and (3) meets any additional criteria established by the Small Business Administration (SBA).[6] Consistent with the SBA's Office of Advocacy's view, the Commission has included small incumbent LECs in this RFA analysis. The Commission emphasizes, however, that this RFA action has no effect on the its analyses and determinations in other, non-RFA contexts.

6. *Local Exchange Carriers.* The most reliable source of information regarding the number of LECs nationwide appears to be the data that the Commission collects annually in connection with the Telecommunications Relay Service (TRS).[7] According to our most recent data, there are 1,335 incumbent LECs.[8] Although some of these carriers may not be independently owned and operated, or have more than 1,500 employees, we are unable at this time to estimate with greater precision the number of LECs that would qualify as small business concerns under the SBA's definition. Consequently, we estimate that there are less than 1,335 small entity incumbent LECs that may be affected by the proposals in the NPRM.

Description of Projected Reporting, Recordkeeping and Other Compliance Requirements

7. The Commission expects that any proposal it may adopt pursuant this NPRM will decrease existing reporting, recordkeeping or other compliance requirements.

Steps Taken To Minimize Significant Economic Impact on Small Entities, and Significant Alternatives Considered

8. The overall objective of this proceeding is to reduce existing regulatory burdens on small carriers to the extent consistent with the public interest.

Federal Rules That May Duplicate, Overlap, or Conflict With the Proposed Rules

9. None.

Ordering Paragraphs

10. Pursuant to the authority contained in sections 2, 4(i)–4(j), 201, and 303(r) of the Communications Act of 1934, as amended, 47 U.S.C. 152, 154(i)–4(j), 201, 303(r), this NPRM is adopted.

11. The Commission's Consumer Information Bureau, Reference Information Center, shall send a copy of this NPRM, including the Initial Regulatory Flexibility Analysis, to the Chief Counsel for Advocacy of the Small Business Administration.

Federal Communications Commission.

William F. Caton,

Deputy Secretary.

[FR Doc. 01–24569 Filed 10–1–01; 8:45 am]

BILLING CODE 6712–01–P

[1] 5 U.S.C. 603. The RFA, see 5 U.S.C. 601 et seq., has been amended by the Contract With America Advancement Act of 1996, Public Law 104–121, 110 Stat. 847 (1996) (CWAAA). Title II of CWAAA is the Small Business Regulatory Enforcement Fairness Act of 1996 (SBREFA).

[2] 47 U.S.C. 64.1901–03.

[3] 5 U.S.C. 603(b)(3), 604(a)(3).

[4] 5 U.S.C. 601(6).

[5] 5 U.S.C. 601(3) (incorporating by reference the definition of ''small business concern'' in 5 U.S.C. 632).

[6] 15 U.S.C. 632.

[7] 47 CFR 64.601 et seq.; Carrier Locator: Interstate Service Providers, FCC Common Carrier Bureau, Industry Analysis Division (rel. Oct. 2000) (Carrier Locator).

[8] Carrier Locator at Figure 1. The total for competitive LECs includes competitive access providers and competitive LECs.

FEDERAL COMMUNICATIONS COMMISSION

47 CFR Part 64

[CC Docket No. 96–115; CC Docket No. 96–149; FCC 01–247]

Telecommunications Carriers' Use of Customer Proprietary Network Information and Other Customer Information; Implementation of the Non-Accounting Safeguards of Sections 271 and 272 of the Communications Act of 1934, as Amended

AGENCY: Federal Communications Commission.

ACTION: Proposed rule.

SUMMARY: In this document, the Commission seeks comment on what methods of customer consent would serve the governmental interests at issue and afford informed consent in accordance with the First Amendment. The Commission also seeks comment on the interplay between section 222 and 272 of the Act in response to a voluntary remand granted by the United States Circuit Court of Appeals for the District of Columbia. The Commission seeks to obtain a more complete record on ways in which customers can consent to a carrier's use of their CPNI.

DATES: Comments due on or before November 1, 2001 and Reply Comments due on or before November 16, 2001.

FOR FURTHER INFORMATION CONTACT: Marcy Greene, Attorney Advisor, Policy and Program Planning Division, Common Carrier Division, (202) 418–2410.

SUPPLEMENTARY INFORMATION: This is a summary of the Commission's Second Further Notice of Proposed Rulemaking

(Second Further Notice) in CC Docket Nos. 96–115 and 96–149, FCC 01–247, adopted August 28, 2001, and released September 7, 2001. The complete text of this Second Further Notice of Proposed Rulemaking is available for inspection and copying during normal business hours in the FCC Reference Information Center, Portals II, 445 12th Street, SW., Room CY–A257, Washington, DC 20554. This document may also be purchased from the Commission's duplicating contractor, Qualex International, Portals II, 445 12th Street, SW, Room CY–B402, Washington, DC 20554, telephone 202–863–2893, facsimile 202–863–2898, or via e-mail *qualexint@aol.com*. It is also available on the Commission's website at *http://www.fcc.gov*.

Synopsis of the Second Further Notice of Proposed Rulemaking

1. In this document, the Commission seeks comment on the responsibilities of carriers in obtaining consent from customers for the use of CPNI and, specifically, on whether we should adopt opt-in or opt-out consent under section 222(c)(1). Pending the resolution by the Commission of the particular method of consent, the Commission offers in this document guidance to parties on how to obtain consent during this interim period. If carriers should choose to obtain customer approval by means of an opt-out approach, such carriers will need to provide customers with notification consistent with § 64.2007(f). Moreover, if a carrier has already provided a customer with notification premised upon an opt-in mechanism, the carrier, should it so choose, may continue to rely upon such notice.

2. The Commission notes that our current rules do not provide for any time period after which a customer's implicit approval of the use or sharing of CPNI may be reasonably assumed to have been given to the carrier. The Commission will consider that question in the Second Further Notice. In the interim, however, we expect that carriers shall not use the CPNI based on ''implicit approval'' (through opt-out) until customers have been afforded some reasonable period to respond to the notification. Pending resolution of the FNPRM, we will use a 30-day period from customer receipt of notice as a ''safe harbor,'' but may permit some shorter period if supported by an adequate explanation from the carrier.

Further Notice of Proposed Rulemaking

3. In this Second Further Notice, the Commission seeks to obtain a more complete record on ways in which customers can consent to a carrier's use of their CPNI. Taking into account the Tenth Circuit's opinion, the Commission seeks comment on what methods of approval would serve the governmental interests at issue, and afford informed consent, while also satisfying the constitutional requirement that any restrictions on speech be narrowly tailored. Specifically, the Commission seeks comment on the interests and policies underlying section 222 that are relevant to formulating an approval requirement, including an analysis of the privacy interests that are at issue, and on the extent to which we should take competitive concerns into account. To the extent that competition, in addition to privacy, is a legitimate government interest under section 222, the Commission seeks comment on the likely difference in competitive harms under opt-in and opt-out approvals. The Commission seeks comment on whether it is possible for the Commission to implement a flexible opt-in approach that does not run afoul of the First Amendment, or whether opt-out approval is the only means of addressing the constitutional concerns expressed by the 10th Circuit.

4. At the outset, the Commission also asks parties to comment on the scope of the Tenth Circuit's opinion. If the Commission were to conclude that the court vacated additional requirements, which it does not believe that it did, the Commission asks parties to comment on whether it would affect our overall findings regarding ''approval of the customer'' in section 222(c)(1). Would the Commission need to re-examine our interpretation of ''approval'' as it relates to the uses for which a carrier may use CPNI without customer approval, including to market customer premises equipment and information services, and to use CPNI to market to customers who have switched to another carrier?

5. In the *CPNI Order* (63 FR 20326, April 24, 1998) the Commission addressed specifically the requirement that a carrier obtain ''approval of the customer'' for use of CPNI outside the telecommunications service from which it was derived. In light of those statutory objectives, it further concluded that carriers must obtain express written, oral, or electronic approval by a customer to use a customer's CPNI beyond the existing service relationship. The Commission rejected an opt-out regime, under which a carrier could use CPNI beyond the existing service relationship as long as it has made a request to a customer for permission to use CPNI in that manner and the customer had not expressly objected to such use. Because the Tenth Circuit found that the opt-in requirements were not narrowly tailored to promote the government's asserted interests in protecting privacy and promoting competition, we initiate this proceeding to obtain a more complete record on consent mechanisms, and the Commission urges commenters to focus upon the concerns articulated by the court. In addition, the Commission asks parties to comment on whether there are any other laws or regulatory schemes governing matters similar to CPNI that the Commission might use as an analog.

6. The Commission seeks comment on the interests and policies underlying section 222 that are relevant to formulating an approval requirement to implement section 222(c)(1). In the *CPNI Order*, the Commission articulated two governmental interests: Protection of customer privacy and promotion of competition. The court indicated that ''[w]hile, in the abstract, these may constitute legitimate and substantial interests, we have concerns about the proffered justifications *in the context of this case*.'' Commenters should also discuss, with as much specificity as possible, how a carrier's use of CPNI could erode privacy. The Tenth Circuit recognized that ''disclosure of CPNI information could prove embarrassing to some,'' but beyond that was uncertain about the government's privacy interest. The Commission seeks comment on that aspect of the court's analysis and ask what other privacy concerns may be implicated by access to CPNI.

7. The court also said that it ''would prefer to see a more empirical explanation and justification for the government's asserted interest [in privacy].'' The Commission seeks comments responsive to the court's concern. The court was not persuaded that competition was a legitimate or substantial state interest underlying section 222. The Commission seeks comments that address those reservations, and on the extent to which competitive concerns should be taken into account in our interpretation of the approval requirements under section 222(c)(1). The Commission further seeks comment about the potential competitive ramifications of construing section 222 without regard to competitive issues, and how such a construction might affect the competitive goals of the 1996 Act. The Commission seeks comment on the likely difference in competitive effects under opt-in and opt-out approvals. It requests empirical or other evidence to illustrate the competitive advantages, if any, that opt-out approval affords a carrier. The Commission asks whether, and to what extent, any such competitive advantages may undermine

the goals of section 222 or, more generally, the goals of the 1996 Act.

8. The Commission seeks comment on any potential harms that may arise from adopting either an opt-out or opt-in approach. The Commission inquires to whom a carrier might make CPNI available, and seeks comments about the extent to which such dissemination would affect customer privacy interests. The Commission asks parties to address the relative costs and convenience of CPNI use under both opt-in and opt-out approaches. Finally, the Commission seeks comment on the court's statement that opt-out is a ''substantially less restrictive alternative.'' The Commission seeks comment more broadly on what methods of approval would serve the governmental interests at issue, and afford informed consent, while also satisfying the constitutional requirement that any restrictions on speech be narrowly tailored.

9. The Commission seeks comment on whether adoption of an opt-out mechanism is consistent with the rationale for the total service approach set forth in the *CPNI Order*. If the Commission adopts an opt-out approach such that a carrier need not obtain the customer's affirmative approval to market services not already subscribed to by the customer, is it necessary or appropriate for us to adopt an alternative to the total service approach? In particular, would there be an impact on the competitive goals of the Act if adoption of an opt-out mechanism increased the likelihood of customer approval for the use of CPNI to market services not already subscribed to by the customer? Alternatively, would adoption of an opt-out mechanism achieve the appropriate balance among the interests of privacy, competition, equity, and efficiency?

10. Finally, the Commission notes that in the Wireless Communications and Public Safety Act of 1999 (911 Act), Congress amended section 222 of the Communications Act by adding provisions regarding CPNI. The amendments were enacted as incentives for greater deployment of wireless E911 services. The new CPNI provisions are intended to encourage that objective by providing separate provisions to protect certain wireless location information, and by expressly authorizing carriers to release this information to specified third parties for specified emergency purposes. The Commission seeks comment on what affect, if any, the provisions of section 222(f) have on our interpretation of the provisions of section 222(c)(1) and the customer approval requirements that are under consideration here.

11. The Commission also seeks comment on whether modifications should be made to the current notification requirements in our rules so that they are most effective in ensuring that customers are clearly informed of their rights, and on how carriers should manage later requests for privacy from the customer. In sum, the Commission seeks comment on all of these approval and notification approaches as well as any other options for ensuring that customers receive adequate notification of their rights under section 222 of the Act.

Interplay of Section 222 and 272

12. On October 8, 1999, AT&T filed a petition for review of the *CPNI Order* with the U.S. Circuit Court of Appeals for the District of Columbia, challenging the Commission's CPNI decisions as they relate to the interplay between section 222 and section 272 of the Communications Act. On July 25, 2000, the D.C. Circuit granted the Commission's motion for remand of the AT&T appeal. The consent mechanism that the Commission eventually adopts in response to the Tenth Circuit's Order could impact our previous findings regarding the interplay between these two sections, and we therefore find it necessary to raise the relevant issues here. The Commission's finding in the *CPNI Order*, which we affirmed in the *CPNI Reconsideration Order* (64 FR 53242, October 1, 1999), that the term ''information'' in section 272(c)(1) does not include CPNI remains intact. Specifically, section 272(c)(1) states that a Bell Operating Company (BOC), in its dealing with its section 272 separate affiliate, ''may not discriminate between the company or affiliate and any other entity in the provision or procurement of goods, services, facilities, and information, or in the establishment of standards * * *'' The Commission found that in the context of the entire 1996 Act, it is not readily apparent that the meaning of ''information'' in section 272 necessarily includes CPNI, and that the most reasonable interpretation of the interplay between sections 222 and 272 is that section 272 ''does not impose any additional CPNI requirements on BOCs' sharing of CPNI with their section 272 affiliates when they share information with their section 272 affiliates according to the requirements of section 222.'' The Commission found this to be reasonable because if we deemed ''information'' to include CPNI under section 272(c)(1), then the BOCs would be unable to share CPNI with their affiliates to the extent contemplated by section 222, but would instead be subject to the more affirmative nondiscrimination requirements in section 272. Adhering to these requirements would mean that BOCs could share CPNI among their section 272 affiliates only pursuant to express approval, and CPNI sharing under section 222(c)(1)(A) (based on implied approval under the total service approach) would be precluded.

13. More specifically, under the terms of section 272, the Commission found that the nondiscrimination requirements contained in that section would, in the context of an opt-in approach, ''pose a potentially insurmountable burden because a BOC soliciting approval to share CPNI with its affiliate would have to solicit approval for countless other carriers as well, known or unknown.'' Although this was only one of several reasons supporting the Commission's interpretation of the interplay between sections 222 and 272, it would likely have to revisit this conclusion if we adopt an opt-out approach as a final rule. Under an opt-out approach, however, a BOC may be free to share its local customer's CPNI with its long distance affiliate regardless of whether the local customer has chosen the affiliate as his or her long distance service provider. The Commission is concerned about the possible competitive and customer privacy ramifications of such an interpretation, and seeks comment on whether it should revisit its interpretation of the interplay between sections 222 and 272 if the Commission adopts an opt-out approach. In particular, would the Commission have to alter its fundamental conclusion that BOCs may share CPNI with their section 272 affiliates pursuant to section 222 without regard to the nondiscrimination requirements in section 272?

Initial Regulatory Flexibility Analysis

14. As required by the Regulatory Flexibility Act (RFA), as amended,[1] the Commission has prepared this present Initial Regulatory Flexibility Analysis (IRFA) of the expected significant economic impact on small entities by the policies and rules proposed in this *Second Further Notice of Proposed Rulemaking* (*Second Further Notice*). Written public comments are requested on this IRFA. Comments must be identified as responses to the IRFA and must be filed by the deadlines for comments on the *Second Further Notice.* The Commission will send a

[1] 5 U.S.C. 603. The RFA, *see* 5 U.S.C. 601 *et seq.*, has been amended by the Contract With America Advancement Act of 1996, Public Law 104–121, 110 Stat. 847 (1996) (CWAAA). Title II of CWAAA is the Small Business Regulatory Enforcement Fairness Act of 1996 (SBREFA).

copy of the *Second Further Notice,* including this IRFA, to the Chief Counsel for Advocacy of the Small Business Administration. *See* 5 U.S.C. 603(a). In addition, the *Second Further Notice* and IRFA (or summaries thereof) will be published in the **Federal Register**.

a. Need for, and Objectives of, the Proposed Rules

15. The Commission is issuing the *Second Further Notice* to seek comment on an appropriate method by which carriers must secure their customers' consent to use the customer's CPNI. This is necessary to respond to the Tenth Circuit's decision vacating the opt-in consent method. Under the opt-in method, a carrier was required to notify the customer of his or her rights with regard to CPNI and then obtain express written, oral or electronic customer approval before the carrier may use CPNI to market services to the customer that are outside the existing service relationship that the customer has with the carrier. The opt-in method is distinguished from the opt-out method under which approval to use the customer's CPNI is inferred from the customer-carrier relationship unless the customer requests specifically that his or her CPNI be restricted.

16. The Tenth Circuit concluded that although the Commission had asserted that the opt-in method would protect consumer privacy and promote competition for telecommunications services in accordance with the goals of section 222 of the Act,[2] it did not demonstrate that opt-in directly and materially advanced these interests. The court concluded that the Commission's determination that an opt-in requirement would best protect a consumer's privacy interests was not narrowly tailored because the Commission had failed to adequately consider an opt-out option. The court stated that an opt-out option should have been more fully investigated as it is inherently less restrictive of speech. Further, the court ruled the Commission did not adequately show that an opt-out strategy would not offer sufficient protection of consumer privacy.[3] In vacating portions of the *CPNI Order,* the court did not require the Commission to find specifically that the opt-out option was the correct approach. Instead, it found fault with the Commission's ''inadequate consideration of the approval mechanism alternatives in light of the First Amendment.''[4]

17. Taking into account the Tenth Circuit's concerns, we seek comment in the *Second Further Notice* on several significant issues concerning what methods of approval would serve the governmental interests at issue under section 222 of the Act, and afford informed consent, while also satisfying the constitutional requirement that any restrictions on speech be narrowly tailored. We seek comment specifically on the extent to which an opt-in or opt-out method of customer approval would be consistent with both the court's concerns and section 222, and on whether we should make modification to our customer notification requirements in § 64.7002 of our rules, 47 CFR 64.7002, based on the form of approval that we adopt.[5]

18. We also ask for information on any potential harms to business entities, especially smaller business entities within the class of companies directly affected by the proposed rule, that may arise from adopting either an opt-in or opt-out approach, including the extent to which dissemination of CPNI would affect a customer's privacy.[6] We also ask for comment on how we can ensure that the consent approach we adopt balances the interests of privacy, competition, equity and efficiency.[7]

19. In addition, we ask parties to indicate whether or not adoption of an opt-out mechanism undermines the total service approach. The total service approach is not a consent mechanism like the opt-in or opt-out approach, but instead describes the scope of services for which a customer grants his or her consent for the carrier to use CPNI. Specifically, under the total service approach, the customer's implied approval is limited to the parameters of the customer's existing service, while the customer must grant the carrier affirmative approval in order for the carrier to use the customer's CPNI to market other services to the customer. If a carrier need not obtain the customer's affirmative approval to market services not already subscribed to by the customer, is it necessary or appropriate for us to adopt an alternative to the total service approach.[8]

b. Legal Basis

20. The *Second Further Notice* is adopted pursuant to sections 1, 4(i), 222, and 303(r) of the Communications Act of 1934, as amended, 47 U.S.C. 151, 154(i), 222, and 303(r).

c. Description and Estimate of the Number of Small Entities to Which the Proposed Rules Will Apply

21. The RFA directs agencies to provide a description of and, where feasible, an estimate of the number of small entities that will be affected by our rules.[9] The RFA generally defines the term ''small entity'' as having the same meaning as the terms ''small business,'' ''small organization,'' and ''small governmental jurisdiction.''[10] For the purposes of this order, the RFA defines a ''small business'' to be the same as a ''small business concern'' under the Small Business Act, 15 U.S.C. s 632, unless the Commission has developed one or more definitions that are appropriate to its activities.[11] Under the Small Business Act, a ''small business concern'' is one that: (1) Is independently owned and operated; (2) is not dominant in its field of operation; and (3) meets any additional criteria established by the Small Business Administration (SBA).[12] The SBA has defined a small business for Standard Industrial Classification (SIC) categories 4812 (Radiotelephone Communications) and 4813 (Telephone Communications, Except Radiotelephone) to be small entities when they have no more than 1,500 employees.[13] We first discuss generally the total number of small telephone companies falling within both of those SIC categories. Then, we discuss the number of small businesses within the two subcategories, and attempt to refine further those estimates to correspond with the categories of telephone companies that are commonly used under our rules.

22. Although affected incumbent local exchange carriers (ILECs) may have no more than 1,500 employees, we do not believe that such entities should be considered small entities within the meaning of the RFA because they either are dominant in their field of operations or are not independently owned and operated, and are therefore by definition not ''small entities'' or ''small business

[2] 47 U.S.C. 222

[3] *Id.* at 1238–39.

[4] *Id.* at 1240, n. 15 (''The dissent accuses us of 'advocating' an opt-out approach. We do not 'advocate' any specific approach.'').

[5] See infra paragraphs 14–23.

[6] See infra paragraph 9.

[7] See infra paragraph 21.

[8] See infra paragraph 21.

[9] 5 U.S.C. 603(b)(3), 604(a)(3).

[10] 5 U.S.C. 601(6).

[11] 5 U.S.C. 601(3) (incorporating by reference the definition of ''small business concern'' in 5 U.S.C. 632).

[12] 15 U.S.C. 632.

[13] 13 CFR 121.201. The North American Industry Classification System (NAICS) has replaced the SIC system for describing types of industries. SIC 4812 corresponds to NAICS 513321, 513322, 51333 (Radiotelephone Communications). SIC 4813 corresponds to NAICS 51331, 51333, 51334 (Telephone Communications, Except Radiotelephone).

concerns'' under the RFA. Accordingly, our use of the terms ''small entities'' and ''small businesses'' does not encompass small ILECs. Out of an abundance of caution, however, for regulatory flexibility analysis purposes, we will separately consider small ILECs within this analysis and use the term ''small ILECs'' to refer to any ILECs that arguably might be defined by SBA as ''small business concerns.'' [14]

23. *Total Number of Telephone Companies Affected.* The United States Bureau of the Census (the Census Bureau) reports that at the end of 1992, there were 3,497 firms engaged in providing telephone services, as defined therein, for at least one year.[15] This number contains a variety of different categories of carriers, including local exchange carriers, interexchange carriers, competitive access providers, cellular carriers, mobile service carriers, operator service providers, pay telephone operators, PCS providers, covered SMR providers, and resellers. It seems certain that some of those 3,497 telephone service firms may not qualify as small entities because they are not ''independently owned and operated.'' [16] For example, a PCS provider that is affiliated with an interexchange carrier having more than 1,500 employees would not meet the definition of a small business. It seems reasonable to conclude, therefore, that fewer than 3,497 telephone service firms are either small entities or small incumbent LECs that may be affected by this order.

24. *Wireline Carriers and Service Providers.* The SBA has developed a definition of small entities for telephone communications companies other than radiotelephone (wireless) companies. The Census Bureau reports there were 2,321 such telephone companies in operation for at least one year at the end of 1992.[17] According to the SBA's definition, a small business telephone company other than a radiotelephone company is one employing fewer than 1,500 persons.[18] All but 26 of the 2,321 non-radiotelephone companies listed by the Census Bureau were reported to have fewer than 1,000 employees. Thus, even if all 26 of those companies had more than 1,500 employees, there would still be 2,295 non-radiotelephone companies that might qualify as small entities or small incumbent LECs. Although it seems certain that some of these carriers are not independently owned and operated, we are unable at this time to estimate with greater precision the number of wireline carriers and service providers that would qualify as small business concerns under the SBA's definition. Consequently, we estimate that fewer than 2,295 small entity telephone communications companies other than radiotelephone companies are small entities or small ILECs that may be affected by this order.

25. *Local Exchange Carriers.* Neither the Commission nor the SBA has developed a definition of small providers of local exchange services. The closest applicable definition under the SBA's rules is for telephone communications companies other than radiotelephone (wireless) companies. The most reliable source of information regarding the number of LECs nationwide of which we are aware appears to be the data that we collect annually in connection with the Telecommunications Relay Service (TRS).[19] According to our most recent data, there are 1,335 incumbent LECs, 349 competitive LECs, and 87 resellers.[20] Although it seems certain that some of these carriers are not independently owned and operated, or have more than 1,500 employees, we are unable at this time to estimate with greater precision the number of LECs that would qualify as small business concerns under the SBA's definition. Consequently, we estimate that there are fewer than 1,335 small entity incumbent LECs, 349 competitive LECs, and 87 resellers that may be affected by the proposals in the *Second Further Notice.*

26. *Interexchange Carriers.* Neither the Commission nor the SBA has developed a definition of small entities specifically applicable to providers of interexchange services (IXCs). The closest applicable definition under the SBA's rules is for telephone communications companies other than radiotelephone (wireless) companies. The most reliable source of information regarding the number of IXCs nationwide of which we are aware appears to be the data that we collect annually in connection with TRS. According to our most recent data, 204 companies reported that they were engaged in the provision of interexchange services.[21] Although it seems certain that some of these carriers are not independently owned and operated, or have more than 1,500 employees, we are unable at this time to estimate with greater precision the number of IXCs that would qualify as small business concerns under the SBA's definition. Consequently, we estimate that there are fewer than 204 small entity IXCs that may be affected by this order.

27. *Competitive Access Providers.* Neither the Commission nor the SBA has developed a definition of small entities specifically applicable to providers of competitive access services (CAPs). The closest applicable definition under the SBA's rules is for telephone communications companies other than radiotelephone (wireless) companies. The most reliable source of information regarding the number of CAPs nationwide of which we are aware appears to be the data that we collect annually in connection with the TRS. According to our most recent data, 349 companies reported that they were engaged in the provision of either competitive access services or competitive local exchange service.[22] Although it seems certain that some of these carriers are not independently owned and operated, or have more than 1,500 employees, we are unable at this time to estimate with greater precision the number of CAPs that would qualify as small business concerns under the SBA's definition. Consequently, we estimate that there are fewer than 349 small entity CAPs that may be affected by this order.

28. *Operator Service Providers.* Neither the Commission nor the SBA has developed a definition of small entities specifically applicable to providers of operator services. The closest applicable definition under the SBA's rules is for telephone communications companies other than radiotelephone (wireless) companies. The most reliable source of information regarding the number of operator service providers nationwide of which we are aware appears to be the data that we collect annually in connection with the TRS. According to our most recent data, 21 companies reported that they were engaged in the provision of operator services.[23] Although it seems certain that some of these companies are not independently owned and operated, or have more than 1,500 employees, we are unable at this time to estimate with greater precision the number of operator

[14] 13 CFR 121.210 (SIC 4813).

[15] United States Department of Commerce, Bureau of the Census, 1992 Census of transportation Communications and Utilities: Establishment and Firm Size, at Firm Size 1–123 (1995) (1992 Census).

[16] 15 U.S.C. 632(a)(1).

[17] 1992 Census, at Firm Size 1–123.

[18] 13 CFR 121.201 (SIC 4813/NAICS 51331).

[19] 47 CFR 64.601 *et seq.*; Carrier Locator: Interstate Service Providers, FCC Common Carrier Bureau, Industry Analysis Division (rel. Oct. 2000) (Carrier Locator).

[20] Carrier Locator at Figure 1. The total for competitive LECs includes competitive access providers and competitive LECs.

[21] Carrier Locator at Figure 1.

[22] Carrier Locator at Figure 1.

[23] Carrier Locator at Figure 1.

service providers that would qualify as small business concerns under the SBA's definition. Consequently, we estimate that there are fewer than 21 small entity operator service providers that may be affected by this order.

29. *Pay Telephone Operators.* Neither the Commission nor the SBA has developed a definition of small entities specifically applicable to pay telephone operators. The closest applicable definition under the SBA's rules is for telephone communications companies other than radiotelephone (wireless) companies. The most reliable source of information regarding the number of pay telephone operators nationwide of which we are aware appears to be the data that we collect annually in connection with the TRS. According to our most recent data, 758 companies reported that they were engaged in the provision of pay telephone services.[24] Although it seems certain that some of these carriers are not independently owned and operated, or have more than 1,500 employees, we are unable at this time to estimate with greater precision the number of pay telephone operators that would qualify as small business concerns under the SBA's definition. Consequently, we estimate that there are fewer than 758 small entity pay telephone operators that may be affected by this order.

30. *Wireless Carriers.* The SBA has developed a definition of small entities for radiotelephone (wireless) companies. The Census Bureau reports that there were 1,176 such companies in operation for at least one year at the end of 1992.[25] According to the SBA's definition, a small business radiotelephone company is one employing no more than 1,500 persons.[26] The Census Bureau also reported that 1,164 of those radiotelephone companies had fewer than 1,000 employees. Thus, even if all of the remaining 12 companies had more than 1,500 employees, there would still be 1,164 radiotelephone companies that might qualify as small entities if they are independently owned are operated. Although it seems certain that some of these carriers are not independently owned and operated, we are unable at this time to estimate with greater precision the number of radiotelephone carriers and service providers that would qualify as small business concerns under the SBA's definition. Consequently, we estimate that there are fewer than 1,164 small entity radiotelephone companies that may be affected by this order.

31. *Cellular Service and Mobile Service Carriers.* Neither the Commission nor the SBA has developed a definition of small entities specifically applicable to providers of cellular services. The closest applicable definition under the SBA's rules is for telephone communications companies other than radiotelephone (wireless) companies. The most reliable source of information regarding the number of cellular service carriers nationwide of which we are aware appears to be the data that we collect annually in connection with the TRS. According to our most recent data, 806 companies reported that they were engaged in the provision of cellular services.[27] Although it seems certain that some of these carriers are not independently owned and operated, or have more than 1,500 employees, we are unable at this time to estimate with greater precision the number of cellular service and mobile service carriers that would qualify as small business concerns under the SBA's definition. Consequently, we estimate that there are fewer than 804 small entity cellular service carriers that may be affected by this order.

32. *Broadband PCS Licensees.* The broadband PCS spectrum is divided into six frequency blocks designated A through F, and the Commission has held auctions for each block. The Commission defined ''small entity'' for Blocks C and F as an entity that has average gross revenues of less than $40 million in the three previous calendar years.[28] For Block F, an additional classification for ''very small business'' was added, and is defined as an entity that, together with its affiliates, has average gross revenues of not more than $15 million for the preceding three calendar years.[29] These regulations defining ''small entity'' in the context of broadband PCS auctions have been approved by SBA.[30] No small businesses within the SBA-approved definition bid successfully for licenses in Blocks A and B. There were 90 winning bidders that qualified as small entities in the Block C auctions. A total of 93 small and very small business bidders won approximately 40% of the 1,479 licenses for Blocks D, E, and F. Based on this information, we estimate that the number of small broadband PCS licenses will include the 90 winning C Block bidders and the 93 qualifying bidders in the D, E, and F blocks, for a total of 183 small PCS providers as defined by SBA and the Commissioner's auction rules.

33. *SMR Licensees.* Pursuant to 47 CFR 90.814(b)(1), the Commission has defined ''small entity'' in auctions for *geographic* area 800 MHz and 900 MHz SMR licenses as a firm that had average annual gross revenues of less than $15 million in the three previous calendar years. The definition of a ''small entity'' in the context of 800 and 900 MHz SMR has been approved by the SBA. The proposed rules may apply to SMR providers in the 800 MHz and 900 MHz bands that either hold geographic area licenses or have obtained extended implementation authorizations. We do not know how many firms provide 800 MHz or 900 MHz geographic area SMR service pursuant to extended implementation authorizations, nor how many of these providers have annual revenues of less than $15 million. Consequently, we estimate, for purposes of this IRFA, that all of the extended implementation authorizations may be held by small entities, some of which may be affected by the rules proposed in the Notice.

34. The Commission recently held auctions for geographic area licenses in the 900 MHz SMR band. There were 60 winning bidders who qualified as small entities in the 900 MHz auction. Based on this information, we estimate that the number of geographic area SMR licensees that may be affected by the decisions and rules proposed in the Notice includes these 60 small entities. No auctions have been held for 800 MHz geographic area SMR licenses. Therefore, no small entities currently hold these licenses. A total of 525 licenses will be awarded for the upper 200 channels in the 800 MHz geographic area SMR auction. The Commission, however, has not yet determined how many licenses will be awarded for the lower 230 channels in the 800 MHz geographic area SMR auction. There is no basis, moreover, on which to estimate how many small entities will win these licenses. Given that nearly all radiotelephone companies have fewer than 1,000 employees and that no reliable estimate of the number of prospective 800 MHz licensees can be made, we estimate, for

[24] Carrier Locator at Figure 1.

[25] 1992 Census at Firm Size 1–123.

[26] 13 CFR § 121.201 (SIC 4812/NAICS 513322).

[27] Carrier Locator at Figure 1. The total for cellular carriers includes cellular, Personal Communications Service (PCS) and Specialized Mobile Radio (SMR) carriers.

[28] See Amendment of Parts 20 and 24 of the Commission's Rules—Broadband PCS Competitive Bidding and the Commercial Mobile Radio Service Spectrum Cap, Report and Order, FCC 96–278, WT Docket No. 96–59, paras. 57–60 (June 24, 1996), 61 FR 33859 (July 1, 1996); see also 47 CFR 24.720(b).

[29] Id. at paragraph 60.

[30] Implementation of Section 309(j) of the Communications Act—Competitive Bidding, PP Docket No. 93–253, Fifth Report and Order, 9 FCC Rcd 5532, 5581–84 (1994).

purposes of this IRFA, that all of the licenses may be awarded to small entities, some of which may be affected by the decisions and rules proposed in the Notice.

35. *Narrowband PCS.* The Commission has auctioned nationwide and regional licenses for narrowband PCS. There are 11 nationwide and 30 regional licensees for narrowband PCS. The Commission does not have sufficient information to determine whether any of these licensees are small businesses within the SBA-approved definition for radiotelephone companies. At present, there have been no auctions held for the major trading area (MTA) and basic trading area (BTA) narrowband PCS licenses. The Commission anticipates a total of 561 MTA licenses and 2,958 BTA licenses will be awarded by auction. Such auctions have not yet been scheduled, however. Given that nearly all radiotelephone companies have no more than 1,500 employees and that no reliable estimate of the number of prospective MTA and BTA narrowband licensees can be made, we assume, for purposes of this IRFA, that all of the licenses will be awarded to small entities, as that term is defined by the SBA.

36. *Toll Resellers.* Neither the Commission nor the SBA has developed a definition of small entities specifically applicable to resellers. The closest applicable definition under the SBA's rules is for all telephone communications companies. The most reliable source of information regarding the number of toll resellers nationwide of which we are aware appears to be the data that we collect annually in connection with the TRS. According to our most recent data, 454 companies reported that they were engaged in the resale of telephone toll services.[31] Although it seems certain that some of these carriers are not independently owned and operated, or have more than 1,500 employees, we are unable at this time to estimate with greater precision the number of toll resellers that would qualify as small business concerns under the SBA's definition. Consequently, we estimate that there are fewer than 454 small entity resellers that may be affected by this order.

d. Description of Projected Reporting, Recordkeeping and Other Compliance Requirements

37. Because we have not made any tentative conclusions or suggested proposed rules, we are unable at this time to describe any projected reporting, recordkeeping, or other compliance requirements.

e. Steps Taken To Minimize Significant Economic Impact on Small Entities, and Significant Alternatives Considered

38. The RFA requires an agency to describe any significant alternatives that it has considered in reaching its proposed approach, which may include the following four alternatives (among others): (1) The establishment of differing compliance or reporting requirements or timetables that take into account the resources available to small entities; (2) the clarification, consolidation, or simplification of compliance or reporting requirements under the rule for small entities; (3) the use of performance, rather than design, standards; and (4) an exemption from coverage of the rule, or any part thereof, for small entities.[32]

39. As noted above, we do not propose a specific method for how carriers should obtain customer consent to use CPNI for marketing purposes, rather we seek comment on ways in which carriers can obtain their customers' consent and the extent to which an opt-in or opt-out approach would satisfy both section 222 and the Tenth Circuit's concerns that any restrictions on speech be no more than necessary to serve the asserted state interests. Section 222 applies to all telecommunications carriers, and therefore, any rules that we adopt regarding customer consent will be applicable to all carriers.[33] Accordingly, we cannot exempt small entities from complying with any consent rules that we adopt.

40. We have, however, taken the limited resources of small entities into account in promulgating certain existing CPNI rules,[34] and intend to do so again in addressing the customer consent requirements. Specifically, we recognize that an opt-in approach would require small entities to have a process in place to obtain express approval from their customers to use CPNI. While such a process could place a burden on small entities in terms of developing, tracking and maintaining customer consent, it would confer a countervailing benefit by permitting them to gain approval to use a customer's CPNI for a broad range of service offerings with a single request through written, oral or electronic means that remains in effect unless or until the customer revokes it.[35] Therefore, we ask parties to comment on whether the burden outweighs the benefit under an opt-in scheme.

41. We also note that the Commission, in response to concerns from all carriers about the cost of compliance, has already streamlined the ''flagging'' and ''audit trail'' requirements that are required to protect against unauthorized access to a customer's CPNI.[36] Small entities may continue to take advantage of these streamlined rules even if the Commission adopts an opt-in requirement.

42. Under an opt-out approach, a small entity need not obtain express approval, but would only be required to notify its customers of their CPNI rights and then process any requests for privacy after such notification. This could be less administratively onerous than obtaining opt-in approval. However, we seek comment indicating small entities' perception of the probable impact of this burden.

43. We ask small entities to particularly keep in mind these types of requirements when they comment in the *Second Further Notice* on any potential harms that may arise from adopting either form of consent,[37] and overall, we ask for comment in response to this IRFA on what competitive or economic impact either an opt-in or opt-out approach would have on small entities and on whether there is any alternative form of consent that we should consider to minimize the economic impact on them.

f. Federal Rules That May Duplicate, Overlap, or Conflict With the Proposed Rules

44. None.

Ordering Clauses

45. Pursuant to sections 1, 4(i), 222 and 303(r) of the Communications Act of 1934, as amended, 47 U.S.C. 151, 154(i), 222 and 303(r), the Clarification Order and Second Further Notice of Proposed Rulemaking are adopted.

46. The Commission's Office of Public Affairs, Reference Operations Division, Shall Send a copy of this Clarification Order and Second Further Notice of Proposed Rulemaking, including the Initial Regulatory Flexibility Analysis, to the Chief Counsel for Advocacy of the Small Business Administration.

[31] Carrier Locator at Figure 1.

[32] 5 U.S.C. 603(c).

[33] CPNI Order, 13 FCC Rcd at 8098–8100, paragraphs 49–50.

[34] See CPNI Reconsideration Order, 14 FCC Rcd at 14472–75, paragraphs 125–27 (adjusting certain CPNI safeguards to ease the costs of compliance for small carriers).

[35] See CPNI Reconsideration Order, 14 FCC Rcd at 8142–43, 8146, 8151, paragraphs 104, 109, 116.

[36] CPNI Reconsideration Order, 13 FCC Rcd at 14472–75, paragraphs 124–27.

[37] See supra paragraph 19.

Federal Communications Commission.

William F. Caton,

Deputy Secretary.

[FR Doc. 01–24570 Filed 10–1–01; 8:45 am]

BILLING CODE 6712–01–P

DEPARTMENT OF TRANSPORTATION

Research and Special Programs Administration

49 CFR Parts 171, 173, 174, 175, 176, 177, and 178

[Docket No. RSPA–98–4952 (HM–223)]

RIN 2137–AC68

Applicability of the Hazardous Materials Regulations to Loading, Unloading, and Storage; Cancellation of Public Meetings

AGENCY: Research and Special Programs Administration (RSPA), DOT.

ACTION: Proposed rule; cancellation of public meetings

SUMMARY: On June 14, 2001, RSPA published a notice of proposed rulemaking to clarify the applicability of the Hazardous Materials Regulations to specific functions and activities, including hazardous materials loading, unloading, and storage operations. On August 2, 2001, we announced two public meetings to facilitate public comment on the proposed rule. One public meeting was scheduled for September 14, 2001, in Washington, D.C.; on September 12, 2001, it was postponed. A second public meeting was scheduled for October 30, 2001, in Diamond Bar, California. The October 30 public meeting is cancelled; the September 14 public meeting will not be rescheduled.

DATES: The comment period closing date remains November 30, 2001.

ADDRESSES: *Written comments.* Submit comments to the Dockets Management System, U.S. Department of Transportation, Room PL 401, 400 Seventh Street, SW., Washington, DC 20590–0001. Comments should identify Docket Number RSPA–98–4952 (HM–223) and be submitted in two copies. If you wish to receive confirmation of receipt of your written comments, include a self-addressed, stamped postcard. You may also e-mail comments by accessing the Dockets Management System Web site at *http://dms.dot.gov/* and following the instructions for submitting a document electronically.

The Dockets Management System is located on the Plaza level of the Nassif Building at the Department of Transportation at the above address. You can review public dockets there between the hours of 9 a.m. and 5 p.m., Monday through Friday, except federal holidays. You can also review comments on-line at the DOT Dockets Management System Web site at *http://dms.dot.gov/.*

FOR FURTHER INFORMATION CONTACT: Michael Johnsen (202) 366–8553, Office of Hazardous Materials Standards, Research and Special Programs Administration; or Susan Gorsky (202) 366–8553, Office of Hazardous Materials Standards, Research and Special Programs Administration.

SUPPLEMENTARY INFORMATION:

Background

On June 14, 2001, the Research and Special Programs Administration (RSPA, we) published a notice of proposed rulemaking (NPRM) (66 FR 32420) under Docket RSPA–98–4952 (HM–223) to clarify the applicability of the Hazardous Materials Regulations (HMR; 49 CFR Parts 171–180) to specific functions and activities, including hazardous materials loading and unloading operations and storage of hazardous materials during transportation. The HM–223 rulemaking has four overall goals. First, we want to maintain nationally uniform standards applicable to functions performed in advance of transportation to prepare hazardous materials for transportation. Second, we want to maintain nationally uniform standards applicable to transportation functions. Third, we want to distinguish functions that are subject to the HMR from functions that are not subject to the HMR. Finally, we want to clarify that facilities within which HMR-regulated functions are performed may also be subject to federal, state, or local regulations governing occupational safety and health or environmental protection.

To achieve these goals, the NPRM proposes to list in the HMR pre-transportation and transportation functions to which the HMR apply. Pre-transportation functions are functions performed to prepare hazardous materials for movement in commerce by persons who offer a hazardous material for transportation or cause a hazardous material to be transported. Transportation functions are functions performed as part of the actual movement of hazardous materials in commerce, including loading, unloading, and storage of hazardous materials that is incidental to their movement. The NPRM also proposes to clarify that ''transportation in commerce,'' for purposes of applicability of the HMR, begins when a carrier takes possession of a hazardous material and continues until the carrier delivers the package containing the hazardous material to its destination as indicated on shipping papers. In addition, the NPRM proposes to include in the HMR an indication that facilities at which functions regulated by the HMR occur may also be subject to applicable standards and regulations of other federal agencies and state, local, and tribal governments. Finally, the NPRM proposes to include in the HMR the statutory criteria under which non-federal governments may be precluded from regulating in certain areas under the preemption provisions of the federal hazardous materials transportation law (49 U.S.C. 5101 *et seq.*)

On August 2, 2001, we announced that we planned to host two public meetings to facilitate public comment on the NPRM (66 FR 40174). The first public meeting was scheduled for September 14, 2001, in Washington, D.C. The second public meeting was to be held in Diamond Bar, California, on October 30, 2001. We also extended the comment period for the NPRM to November 30, 2001.

On September 12, 2001, we announced on our website (*http://hazmat.dot.gov*) and by telephone to registered participants that the September 14 meeting was postponed, but that we likely would reschedule it for a later date. As of September 25, only ten persons had indicated to us that they planned to make presentations at the Washington meeting; only four persons had registered with us to speak at the California meeting on October 30, and two of them were among the ten Washington speakers. Therefore, we decided to cancel the California public meeting. Further, we decided against rescheduling the Washington meeting. The comment period for the NPRM remains open until November 30, 2001. We urge all interested persons to submit written comments on the NPRM. We will consider late-filed comments to the extent possible as we consider whether to proceed to a final rule.

If you believe that written comments are not sufficient to assure that your views on the NPRM are communicated to us and that a public meeting to facilitate comment on the NPRM is necessary, please submit a statement explaining why a public meeting is necessary to the HM–223 docket. If there is sufficient interest, we will reconsider our decision on the public meetings.

Issued in Washington, DC, on September 26, 2001.

Robert A. McGuire,

Associate Administrator for Hazardous Materials Safety, Research and Special Programs Administration.

[FR Doc. 01–24539 Filed 10–1–01; 8:45 am]

BILLING CODE 4910–60–P

DEPARTMENT OF COMMERCE

National Oceanic and Atmospheric Administration

50 CFR Parts 222 and 223

[Docket No.000320077–1177–02; I.D.062501B]

Endangered and Threatened Wildlife; Sea Turtle Conservation Requirements

AGENCY: National Marine Fisheries Service (NMFS), National Oceanic and Atmospheric Administration (NOAA), Commerce.

ACTION: Proposed rule; request for comments.

SUMMARY: NMFS proposes to amend the regulations protecting sea turtles to enhance their effectiveness in reducing sea turtle mortality resulting from shrimp trawling in the Atlantic and Gulf Areas of the southeastern United States. Turtle excluder devices (TEDs) have proven to be effective at excluding sea turtles from shrimp trawls; however, NMFS has determined that modifications to the design of TEDs need to be made to exclude leatherbacks and large, sexually mature loggerhead and green turtles; several approved TED designs are structurally weak and do not function properly under normal fishing conditions; and modifications to the trynet and bait shrimp exemptions to the TED requirements are necessary to decrease lethal take of sea turtles. These proposed amendments are necessary to protect endangered and threatened sea turtles in the Atlantic and Gulf Areas.

DATES: Written comments will be accepted through November 16, 2001.

ADDRESSES: Written comments on this action, the draft Environmental Assessment/Regulatory Impact Review Regulatory Flexibility Act Analysis (EA/RIR) and request for copies of the 1999 TED opening evaluation report should be addressed to the Chief, Endangered Species Division, Office of Protected Resources, NMFS, 1315 East-West Highway, Silver Spring, MD 20910. Comments may also be sent via fax to 301-713-0376. Comments will not be accepted if submitted via e-mail or the Internet.

FOR FURTHER INFORMATION CONTACT: Robert Hoffman (ph. 727–570–5312, fax 727–570–5517, e-mail Robert.Hoffman@noaa.gov), or Therese A. Conant (ph. 301–713–1401, fax 301–713–0376, e-mail Therese.Conant@noaa.gov).

SUPPLEMENTARY INFORMATION:

Background

All sea turtles that occur in U.S. waters are listed as either endangered or threatened under the Endangered Species Act of 1973 (ESA). The Kemp's ridley (*Lepidochelys kempii*), leatherback (*Dermochelys coriacea*), and hawksbill (*Eretmochelys imbricata*) are listed as endangered. The loggerhead (*Caretta caretta*) and green (*Chelonia mydas*) turtles are listed as threatened, except for breeding populations of green turtles in Florida and on the Pacific coast of Mexico, which are listed as endangered.

The incidental take and mortality of sea turtles as a result of trawling activities, have been documented in the Gulf of Mexico and along the Atlantic seaboard. In 1990 the National Academy of Sciences, in a report titled Decline of the Sea Turtle: Causes and Prevention, estimated that between 33,000 and 44,000 loggerhead and Kemp's ridley sea turtles were being killed, per year, as a result of shrimp trawling activities. On June 27, 1987, (52 FR 24244) NMFS required TEDs in certain areas during certain times and further defined and expanded the required use of TEDs in the shrimp fishery on December 4, 1992, (57 FR 57348). These rules and subsequent modifications are codified in 50 CFR 223.206 and 50 CFR 223.207 and require most shrimp and summer flounder trawlers operating in the Southeastern U.S. (Atlantic Area, Gulf Area, and summer flounder sea turtle protection area) to have a NMFS-approved TED installed in each net that is rigged for fishing to provide for the escape of sea turtles. TEDs currently approved by NMFS include single-grid hard TEDs and hooped hard TEDs conforming to a generic description, two types of special hard TEDs, the flounder TED and the Jones TED, and one type of soft TED, the Parker soft TED.

The use of TEDs has contributed to the strong population increase for Kemp's ridley sea turtles. Kemp's ridleys are the smallest sea turtles, and adult size animals can pass through the current TED opening dimensions. Once the most critically endangered sea turtle, their nesting levels have increased from 700-800 per year in the mid-1980's to over 6,000 nests in 2000. Since 1990, corresponding with the more widespread use of TEDs in U.S. waters, the total annual mortality (including natural mortality that cannot be controlled) for coastal Kemp's ridleys has been reduced by 44-50 percent (TEWG, 2000). NMFS believes that this demonstrates that the use of TEDs can have a significant impact on the survival and recovery of sea turtle species.

Despite the demonstrated success of TEDs for some species of sea turtles, NMFS is concerned that TEDs are not adequately protecting all species and size classes of turtles. There is new information showing 47 percent of stranded loggerheads and 1-7 percent of stranded green turtles are too large to fit through the current TED openings. Comprehensive scientific data on the body depths of these turtles were not available when the original TED sizes were specified. The original TED sizes were also much too small to allow leatherback sea turtles, the largest species, to escape. Instead, NMFS has attempted to address the incidental catch of leatherback turtles by trawlers through a regime of reactive closures that has proven complicated and incomprehensive. There is also concern about the status of these populations with stable or declining nesting numbers for the northern nesting population of loggerhead sea turtles (TEWG, 2000) and dramatically declining nesting of leatherback sea turtles on their main nesting grounds (NMFS SEFSC, 2001). NMFS is therefore proposing to modify the TED regulations to insure TEDs are capable of releasing large leatherback sea turtles and adult loggerhead and green turtles. These modifications will extend the protection TEDs afford smaller turtle species to all size classes of all sea turtle species.

Summary of Proposed Changes to the Sea Turtle Regulations

NMFS is proposing to amend the regulations applicable to shrimp trawling in all inshore and offshore waters of the Atlantic and Gulf Areas to: (a) Require all hard TEDs to have a grid with a minimum inside measurement of 32-inch (81-cm) by 32-inch (81-cm); (b) require the use of either the double cover flap TED or a TED opening with a minimum of 71 inch (180 cm) straight-line stretched mesh; (c) disallow the use of the hooped hard TED; (d) disallow the use of weedless TEDs and Jones TEDs; (e) disallow the use of accelerator funnels; (f) require bait shrimpers to use TEDs in states where a state-issued bait shrimp license holder can also fish for food shrimp from the same vessel; (g) and require the use of tow times on small try nets. These changes are

proposed to be implemented 1 year after the final rule is published in the **Federal Register**.

Advanced Notice of Proposed Rule Making

The measures proposed in this rule were based, in part, on comments received on an Advanced Notice of Proposed Rule Making (ANPR) published April 5, 2000 (65 FR 17852). NMFS announced in the ANPR that it was considering technical changes to the TED regulations, to effectively protect all life stages and species of sea turtles. Specific changes discussed were to increase the minimum size opening for TEDs, modify or decertify hooped hard TEDs and weedless TEDs, change the requirements for the types of flotation required, and modify the leatherback conservation zone regulations.

NMFS received 23 responses to the request for comments on the ANPR. When appropriate, comments are grouped according to general subject matter, and references are made only to some groups or individuals, and not to all groups or individuals who may have made similar comments.

Comment 1: Environmental organizations, Federal agencies, state agencies, state Sea Turtle Stranding and Salvage Network (STSSN) volunteers, and unaffiliated citizens believe that the openings of the current TEDs are too small and should be enlarged to allow larger turtles to escape. Some of these commenters believe that the size specified in the ANPR of 35 inches by 16 inches (89 cm by 41 cm) would not be adequate to protect large nesting turtles.

Response: NMFS agrees with the need to make TED escape openings larger and is therefore proposing to increase the escape opening size of TEDs in all inshore and offshore waters of the Atlantic and Gulf areas. The size proposed in the ANPR of 35 inches by 16 inches (89 cm by 41 cm) was based on information from Epperly and Teas (1999) which used a linear regression formula to estimate body depth based on carapace width, and suggested that 99 percent of nesting loggerheads of the northern subpopulation had carapace widths equal to or less than 33 inches (83.2 cm) and a corresponding depth of 15.7 inches (39.8 cm). However, carapace measurements recently collected by the South Carolina Department of Natural Resources (SCDNR) on actual nesting females of the northern loggerhead population showed 7 out of 90 had body depths greater than 16 inches (40.6 cm). Also significant numbers of the endangered leatherback turtle have been documented in inshore and offshore waters in the Atlantic and Gulf areas. Therefore, to protect all turtles, NMFS is proposing to require the use of the double cover flap TED or a TED opening with a minimum of 71-inch (180-cm) straight-line stretched mesh (see Provisions of the Proposed Rule).

Comment 2: Environmental organizations, Federal agencies and state agencies recommend the modification of the leatherback conservation zone regulations (60 FR 25260, May 12, 1995; 60 FR 25663, May 12, 1995) implemented as a result of the Leatherback Contingency Plan. These commenters believe that the response times in implementing emergency rules for closure of waters during leatherback migrations are too slow and that the surveying required to support these rules is frequently underfunded or too variable due to weather and water clarity. Also, some of these commenters believe the Gulf coast should be included in the Leatherback Contingency Plan.

Response: NMFS is proposing the use of either the double cover flap TED or a TED opening with a minimum of 71-inch (180-cm) straight-line stretched mesh in all inshore and offshore waters in the Atlantic and Gulf Areas. Both of these TEDs have openings large enough to accommodate leatherbacks as well as large nesting loggerheads. This would eliminate the need for emergency rules and surveying.

Comment 3: Commercial Fishermen of Lafitte do not want NMFS to prohibit the use of the hooped hard TED. They state that the hooped TED, known as the Coulon TED, not only excludes turtles but also works well as a finfish bycatch reduction device. The Coulon TED is a hooped hard TED with an escape opening of 34 inches (86 cm) by 27 inches (69 cm) with the front hoop measuring 34 inches (86 cm) by 17 inches (43 cm). The Commercial Fishermen of Lafitte state that the escape opening of this TED can be expanded to 35 inches (89 cm) by 27 inches (69 cm), with the front hoop measuring 35 inches (89 cm) by 17 inches (43 cm). According to a net maker in the area, approximately 50 fishing vessels are using this TED in Louisiana waters.

Response: In order to protect the endangered leatherback and large loggerhead sea turtles, NMFS must ensure that all approved TEDs are capable of releasing these large turtles. The expanded version of the Coulon TED is not large enough to release large loggerhead and leatherback sea turtles. It would be impractical to use a hooped hard TED that would be large enough to release leatherback turtles.

Comment 4: The Florida Fish and Wildlife Conservation Commission agrees with the need to make TED escape openings larger but feels NMFS should consider the economic burden of Florida's inshore shrimp fishery when considering the use of the leatherback modification and the increase of the standard grid size.

Response: NMFS' gear specialists working on the east coast of Florida reported that the majority of inshore fishermen use grids 32 inches (81 cm) and larger. NMFS is proposing to increase the grid size to a minimum inside measurement of 32 inches (81 cm) by 32 inches (81 cm). Based on the information from the gear specialists this will not affect a large number of Florida inshore fishermen. The Florida inshore fishermen who use grids smaller than 32 inches (81 cm) will have 1 year to change to the new size grid. By delaying the implementation date to 1-year after the final rule is published in the Federal Register, fishermen would be able to buy the new size grid as part of necessary gear replacement and thereby not add an additional cost.

Comment 5: The United States Fish and Wildlife Service (USFWS) recommends the decertification of the hooped hard TED and the weedless TED and the abolishment of the TED exemption for bait shrimpers.

Response: NMFS agrees with the USFWS on the need to disallow the use of the hooped hard TED and the weedless TED for the reasons described in the ANPR (65 FR 17852). The hooped hard TED is not widely used. NMFS' enforcement personnel report confusion with the differing regulatory requirements for escape openings for single grid and hooped hard TEDs. Weedless TEDs (a TED with the deflector bars not attached to the bottom of the grid frame) have been documented by NMFS enforcement with bent bars and spacing more than 4 inches (10 cm) apart. The bars of weedless TEDs appear to be easily bent during commercial use because of the inherent weakness in the design. NMFS' TED testing in 1996 showed that weedless TEDs with the bars bent inward (to the rear of the TED hoop) failed to exclude any of the turtles exposed. NMFS is proposing to implement a requirement that the bars on hard TEDs be firmly attached to the frame at both ends, 1 year after the publication of the final rule in the **Federal Register**.

NMFS also agrees with the USFWS that the bait shrimp exemption currently authorized under the sea turtle

conservation regulation represents a threat to sea turtles. NMFS enforcement and gear specialists have seen an increase in boats claiming to be bait shrimpers but possessing more than 32 lb (14.5 kg) of dead shrimp. In some cases, these shrimpers are using ''snap-in grids'' on their TEDs and claim to have used them while catching the dead shrimp but then taking the ''snap-in grid'' out and closing the escape opening to fish for bait shrimp. Snap-in grids do not meet the regulatory requirement for the installation of the grid into the trawl net because the grids are attached to the outside of the grid frame with a few strings, plastic tie wraps or bolts and not sewn into the trawl around the entire circumference of the TED with heavy twine (50 CFR 223.207(a)(2)).

NMFS originally authorized a bait shrimp exemption, which requires tow times to be less than 55 minutes, believing tow times would be self-regulating as a bait shrimper would want to limit tow times to ensure live catch. However, gear specialists have found increasing numbers of bait shrimpers selling shrimp for food. Landing dead shrimp would likely result in an increase in tow times beyond the shorter tows used to catch live bait. Tow time limits are extremely difficult to enforce and have only been authorized in limited cases where particular fishing practices limit the length of tows. NMFS believes that the bait shrimp exemption is unenforceable and represents an increased risk in lethal take of turtles. Therefore, NMFS is proposing to change the bait shrimp TED exemption. Since 1992, when the bait shrimp exemption was initially developed, TEDs have been used successfully in small, inshore shrimp nets. Many bait shrimpers already own and use TEDs when not operating under their bait shrimp licences. In some areas, bait shrimpers use other exempt gear or practices (e.g., barred roller trawls, hand-retrieved nets). Changes to the bait shrimp exemption would affect none of these other exemptions.

Comment 6: Georgia Department of Natural Resources (GADNR) recommends the adoption of a single TED configuration for all areas at all times. The leatherback configuration should be the configuration adopted. According to GADNR, 30 percent of Georgia fishermen already use the leatherback modification full time because it is good at excluding trash fish and the long flap helps shrimp retention.

Response: NMFS agrees with the GADNR on the value of the leatherback modification. The use of the leatherback modification (a TED opening with a minimum of 71-inch (180-cm) straight-line stretched mesh) or the double cover flap TED in all inshore and offshore waters will provide protection for all sea turtles. The current TED opening sizes do not afford protection for large sexually mature loggerhead and green turtles. Adoption of this proposed rule also will eliminate the need for the use of inefficient emergency rules and the leatherback conservation plan, which does not cover all areas where leatherback turtles can be found.

Comment 7: The University of Georgia Marine Extension Service (UGMES) requested the water depths be specified at which spongex-type floats would not be allowed.

Response: Upon further review of the TED float requirements, NMFS has decided not to propose amendments to them at this time due to the lack of testing of viable alternatives to spongex-type floats.

Comment 8: The UGMES also requested that NMFS allow other methods of hole enlargement, such as the addition of a strip of webbing in the center of the forward section of the extension webbing, to help maintain the angle of the TED.

Response: The use of a strip of webbing in the center of the forward section of the extension webbing to modify a TED with a leatherback size opening is not prohibited under current regulations. Also the double cover flap TED which can be used in-lieu of the leatherback modification has a smaller cut than the leatherback modification (the length of the leading edge of the escape opening cut must be no less than 56 inches (142 cm)). The double cover flap TED is composed of two equal size rectangular panels with an overlap of no more than 15 inches (38 cm) and each panel is no less than 58 inches (147 cm) wide. The panels can be sewn together only along the leading edge of the cut. The edge of the panels may be attached 6 inches (15 cm) behind posterior edge of grid; the end of each panel must not extend more than 6 inches (15 cm) past the center of the bottom of the grid. These modifications make it easier to install TEDs on a smaller grid

Comment 9: The Texas Shrimp Association (TSA) requested that shrimp loss data be evaluated and that NMFS determine what impact a 300-lb to 1,200-lb (136-kg to 545-kg) leatherback turtle would have on any TED. TSA also asked whether the Epperly and Teas (1999) study was submitted for peer review. TSA questioned the need for a larger size opening in the western Gulf based on the fact that stranded turtles on the western Gulf, on average, are smaller than those on the Atlantic and eastern Gulf coasts.

Response: In the summer of 2000, NMFS conducted seven trips to test the leatherback modification for shrimp loss in commercial conditions. The leatherback modification was compared with TEDs currently used in the Gulf of Mexico and the southeastern Atlantic. Four of the trips were conducted in the Gulf of Mexico, and three were conducted in the Atlantic. Shrimp loss for the four Gulf of Mexico trips showed a 3-percent loss (trip #067), a 35-percent loss (trip #068), a 1-percent loss (trip #069), and a 2-percent loss (trip #073), while the three Atlantic trips combined showed a 3-percent shrimp loss (trips #070-072). NMFS believes that shrimp loss percentage from trip #068 is an error and not indicative of actual shrimp loss. The 35-percent shrimp loss demonstrated on this trip is well above the range of 1 to 3 percent demonstrated by the other six trips. NMFS believes that gear problems on trip #068 could have contributed to the 35-percent loss. The 1- to 3-percent loss on the other trips was not statistically significant from zero.

NMFS cannot use live leatherback turtles for testing; however, NMFS believes a 300-lb to 1,200-lb (136-kg to 545-kg) leatherback will do much less damage to a TED and shrimp gear if it is allowed to escape.

The Epperly and Teas (1999) study has not yet been peer reviewed; however, it is being submitted for publication in the scientific journal Fishery Bulletin and, as part of that process, will receive peer review.

NMFS disagrees with the TSA's assessment that a larger size opening is not needed in the western Gulf of Mexico. Stranding records from 1986 through 1997 show that 36 to 66 percent of loggerhead turtles stranded in the western Gulf were larger than the current minimum TED escape opening size, and records from 1986 through 1999 show that 170 leatherback turtles were stranded in the western Gulf of Mexico.

Provisions of the Proposed Rule

Increase of the Minimum Size of the TED Opening in All Inshore and Offshore Waters of the Atlantic and Gulf Areas

TEDs incorporate an opening, usually covered by a webbing flap, that allows sea turtles to escape from trawl nets. To be approved by NMFS, a TED design must be able to exclude small sea turtles during experimental TED testing conducted by NMFS. TEDs also must

meet generic criteria based upon certain parameters of TED design, configuration, and installation, including height and width dimensions of the TED opening through which the turtles escape. In the Atlantic Area, these requirements are currently ≥35 inches (≥89 cm) in width and ≥12 inches (≥30 cm) in height. In the Gulf Area, the requirements are ≥32 inches (81 cm) in width and ≥10 inches (≥25 cm) in height.

NMFS proposes to require the use of the NMFS-approved double cover flap TED (approved May 14, 2001, 66 FR 24287) or a standard TED opening with a minimum of 71 inch (180 cm) straight-line stretched mesh measurement, with a resultant circumference of the opening being 142 inches (361 cm) (formerly called the leatherback modification; approved May 12, 1995, 60 FR 25663) in both the Atlantic and Gulf Areas. Both of these TEDs have been tested for shrimp retention (see the response to comment 9 of this notice for shrimp retention data on the new standard TED and 66 FR 24287 for the double cover flap TED) and small turtle escapement (see 60 FR 25663 and 66 FR 24287).

The double cover flap TED and the proposed standard TED were shown to be effective at excluding a prototype leatherback. Because testing with live leatherbacks is impossible, NMFS obtained the carapace measurements of 15 nesting female leatherback turtles and used these data to construct a pipe-framed model of a leatherback turtle measuring 40 inches wide by 21 inches deep (102 cm by 53 cm). The leatherback model and a diver with full scuba gear were able to pass through the escape openings of these TEDs.

Stranding data collected through the STSSN indicate that the proportion of large, mature loggerheads and greens that strand on coastal beaches appears to be greater than the proportion that would be expected given the size distribution of sea turtles found in nearshore waters. The disparity in size may be a result of the minimum size requirement for TED openings which allows only smaller turtles to escape. NMFS (Epperly and Teas, 1999; copies available see **ADDRESSES**) evaluated the size of TED openings in relation to the carapace width and body depth of stranded sea turtles and found that body depth, but not carapace width, was a factor in the turtle's ability to exit the TED opening. Up to 47 percent of the body depths for stranded loggerheads and 7 percent for green turtles exceeded the minimum height requirements for TED openings.

Stranding data from 1986 through 1997 show that between 33 percent and 47 percent of all loggerhead turtles stranded had body depths greater than the minimum height of the TED opening. These percentages range from 33-66 in the western Gulf of Mexico, to 83-96 in the eastern Gulf of Mexico, to 23-40 in the Atlantic off the coast of the southeastern United States (Epperly and Teas, 1999). These same data also show that between 1 and 7 percent of all green turtles stranded had body depths greater than the minimum height of the TED opening. These percentages range from 0-3 in the western Gulf of Mexico, to 1-10 in the eastern Gulf of Mexico, to 3-10 in the Atlantic off the coast of the southeastern United States (Epperly and Teas, 1999). Measurements done on South Carolina nesting beaches conducted by the SCDNR in the summer of 2000 on nesting loggerhead turtles showed 89 of the 90 nesting turtles had body depths greater than the minimum TED opening in the Atlantic Area.

This information indicates that current TED openings may be allowing continued high incidental take of large reproductive loggerhead and green turtles. Since this take is focused on pre-reproductive and reproductive turtles, it may be precluding most, if not all, benefits these species may be receiving from the exclusion of small juveniles from shrimp trawls.

The proposed use of a TED opening with a minimum of 71 inch (180.3 cm) straight-line stretched mesh or the double cover flap TED would be large enough to exclude 100 percent of nesting loggerhead and green turtles based on the information in Epperly and Teas (1999) and the measurements of nesting loggerhead turtles taken by the SCDNR in the spring and summer of 2000. This is particularly important for loggerhead turtles, as population models indicate that a reduction in mortality in these size classes would result in the greatest annual population multiplication rate (Crouse *et al.*, 1987; Hopewell, 1998).

The Turtle Expert Working Group (TEWG 1998) identified four genetically separate nesting populations of loggerhead turtles in the southeastern United States. The health and recovery of the loggerhead turtle species is dependent on the health and recovery of each of these populations. It is believed that the northern nesting population may at best be stable and possibly may be in decline.

Leatherback sea turtles are too large to fit through the standard size TED opening; when mature, they can weigh between 600 and 1,300 lb (273 and 591 kg). To address this issue, NMFS, in cooperation with the USFWS, South Carolina, Georgia, and Florida, developed the Leatherback Contingency Plan to reduce leatherback mortality in shrimp trawls, and, in 1995, NMFS established the leatherback conservation zone regulations to implement the Leatherback Contingency Plan (60 FR 25260, May 12, 1995; 60 FR 25663, May 12, 1995). The Leatherback Contingency Plan established procedures to identify when and where TEDs with large escape openings should be used to protect leatherbacks during their annual, spring migration along the Atlantic seaboard. The waters north of Cape Canaveral, from Florida to the North Carolina-Virginia border, were identified as the leatherback conservation zone. Within this zone, weekly aerial surveys for leatherback sightings are conducted from January 1 through June 30 of each year. If sightings, in replicate surveys, exceed 10 leatherback turtles per 50 nautical miles (nm)(92.6 km) of trackline, NMFS will close, for a 2-week period, waters within 1° lat. of the trackline to shrimp trawlers unless they use a TED modified with the leatherback exit opening.

In 1999, NMFS became concerned that the leatherback conservation zone regulation was not adequate to protect leatherbacks. In the spring of 1999, NMFS implemented the 2-week closures in areas of South Carolina and North Carolina (64 FR 25460, May 12, 1999; 64 FR 27206, May 19, 1999; 64 FR 28761, May 27, 1999; 64 FR 29805, June 3, 1999). In implementing the regulation, it was determined that replicate surveys were not always feasible due to weather, staff, or equipment constraints and that a sighting of less than 10 leatherbacks per 50 nm (92.6 km) in the replicate survey was not necessarily an indication that the turtles had moved away from the closed area.

From October 1 through December 15, 1999, 15 leatherbacks stranded in Nassau through Brevard counties on the east coast of Florida. Since these strandings occurred seasonally outside the provisions specified in the leatherback conservation zone regulation, NMFS issued an emergency 30-day rule (64 FR 69416, December 13, 1999), requiring shrimp trawlers to use the leatherback modification in their TEDs. The 30-day restriction was necessary because leatherbacks were expected to be present in the area through that period.

The leatherback conservation zone regulation does not extend to the Gulf area. Historical records indicate that the Western Gulf is important to leatherbacks; Leary (1957) reported a large group of up to 100 leatherbacks just offshore of Port Aransas, Texas associated with a dense aggregation of

Stomolophus. Recent stranding data from 1986 through 1999 show an average of 9 leatherbacks per year have been killed in the Western Gulf; however, in the last 5 years, that average has gone up to 14 leatherbacks stranded per year, with a high of 21 leatherbacks in 1999. Leatherbacks are also killed in the Eastern Gulf, with an average of 5 per year from 1986 through 1999 and with a high of 19 in 1989. In the Atlantic along the southeastern United States, leatherback strandings have averaged 46 per year from 1986 through 1999. Leatherbacks strand along the Atlantic coast of Florida year-round, averaging 21 strandings per year.

In French Guiana and Suriname, the largest leatherback rookery in the western North Atlantic, nesting has decreased at a rate of 15.0 percent - 17.3 percent per year since 1987 (NMFS SEFSC 2001). If turtles are not nesting elsewhere, it appears that the Western Atlantic portion of the population is being subjected to mortality beyond sustainable levels, resulting in a continued decline in numbers of nesting females. There have been increases in leatherback nesting at minor nesting areas such as Florida and the U.S. Virgin Islands, but those cannot account for the decreases in the Guianas, which are in the tens of thousands.

A steady increase in Kemp's ridley nesting, which has not leveled off to date, has occurred since 1990 and appears to be due to increased hatchling protection and a large increase in survival rates of immature turtles beginning in 1990, coinciding with the introduction of TEDs. Adult ridley numbers have now grown from a low of approximately 1,050 adults producing 702 nests in 1985, to greater than 3,000 adults producing 1,940 nests in 1995, to greater than 9,000 adults producing about 5,700 nests in 2000 (TEWG 2000). The increase in the Kemp's ridley nesting population since 1989 demonstrates that the use of TEDs can have a significant positive impact on the survival and recovery of sea turtle species. The proposed required use of either the new standard TED opening or the double cover flap TED in all inshore and offshore waters in the Gulf and Atlantic Areas will provide the protection TEDs afford smaller turtle species to all size classes of all sea turtle species thereby aiding in their recovery. This proposal will also provide consistency and predictability for the industry by eliminating the disparate regulations in different areas and times and eliminating reactionary closures to protect leatherback turtles.

Disallow the Use of Hooped Hard TEDs, Weedless TEDs, Jones TEDs, and Accelerator Funnels; Require Bait Shrimpers in Certain States to use TEDs; and Require Tow Time Restrictions on Small Try Nets

As stated in NMFS's response to Comment 5 in this proposed rule, the structural integrity of the weedless and Jones TEDs does not hold up under commercial use. Grid bars bend toward the back of the net. This condition has been shown to severely limit these TEDs' ability to exclude turtles. Therefore, NMFS is proposing to require that TED deflector bars be securely attached/welded to the top and bottom of the TED frame or to a horizontal deflector bar (in the case of flounder TEDs), to be implemented 1 year after the final rule is published in the **Federal Register**. This will allow fishermen to replace this gear as part of normal gear replacement due to wear and tear.

As stated in NMFS's response to Comments 3 and 5 in this proposed rule, it is not feasible to construct a hooped hard TED large enough to exclude large loggerhead and leatherback turtles. The hooped hard TED also is not widely used, and enforcement personnel report confusion with the differing regulatory requirements for escape openings for single grid and hooped hard TEDs.

NMFS is proposing that the use of accelerator funnels not be allowed. The opening in an accelerator funnel that would be required to effectively release large loggerhead and leatherback turtles would be too large (71 inch (180 cm)) to accelerate the water through the grid and would cause the unattached portion of the funnel to extend out the escape opening causing the loss of shrimp.

NMFS is also proposing to change the exemption from TED requirements for bait shrimpers. As stated in NMFS's response to Comment 5, NMFS enforcement and gear specialists have seen an increase in boats claiming to be bait shrimpers but possessing more than 32 lb (14.5 kg) of dead shrimp. Landing dead shrimp would likely result in an increase in tow times beyond the shorter tows used to catch live bait. Longer tow times would increase the likelihood of entangling a sea turtle and, without a TED installed, increase the chance of injury or mortality. When there is no incentive to limit tow times as a part of normal fishing operations, tow time limits are extremely difficult to enforce. Therefore, NMFS is proposing to limit the bait shrimp TED exemption to shrimpers with a valid state bait-shrimp license for which such state license allows the licensed vessel to participate in the bait shrimp fishery only.

NMFS is proposing to require shrimpers to limit tow times when deploying small try nets. Sea turtles are captured in trynets. NMFS observer program from 1992 through 1995, documented that try nets accounted for 43 percent of the observed turtle captures. In 2001, shrimpers operating in the Atlantic area reported capturing more than 20 turtles in their smaller try nets without TEDs installed. NMFS required shrimpers deploying try nets with head rope lengths greater than 12 feet (3.6 m) or foot rope length greater than 15 feet (4.6 m) to have a TED installed but exempted the smaller try nets (61 FR 66933, December 19, 1996). NMFS initially issued this exemption without tow time restrictions because it felt that this type of gear naturally lent itself to short tow times.

NMFS recognizes that tow time limits are difficult to enforce, but without tow time restrictions, NMFS has no enforcement mechanism to ensure compliance with measures that will increase protection of listed sea turtles.

Request for Comments

NMFS will accept written comments (see **ADDRESSES**) on this proposed rule until November 16, 2001. In addition, NMFS will conduct public hearings on this action. Hearing dates, times, and locations will be published in the **Federal Register** under separate notification.

References

Epperly, S.P. and W.G. Teas. 1999. Evaluation of TED Opening Dimensions Relative to Size of Turtles stranding in the Western North Atlantic. NMFS SEFSC PRD-98/99-08

Leary, T.R. 1957. A schooling of leatherback turtles, *Dermochelys coriacea*, on the Texas coast. Copeia 1957(3):232.

National Academy of Science, National Research Council. 1990. Decline of the Sea Turtles: Causes and Prevention. National Academy Press. Washington, D.C. 189 pp.

National Marine Fisheries Service Southeast Fisheries Science Center (NMFS SEFSC). 2001. Stock assessments of loggerhead and leatherback sea turtles and an assessment of the impact of the pelagic longline fishery on the loggerhead and leatherback sea turtles of the Western North Atlantic. U.S. Department of Commerce NOAA Technical Memorandum NMFS-SEFSC-455, 343 pp.

Turtle Expert Working Group (TEWG). 2000. Assessment update for

the Kemp's ridley and loggerhead sea turtle populations in the Western North Atlantic. U.S. Department of Commerce NOAA Technical Memorandum NMFS-SEFSC-444, 115pp.

Turtle Expert Working Group. 1998. (Byles, R., C. Caillouet, D. Crouse, L. Crowder, S. Epperly, W. Gabriel, B. Gallaway, M. Harris, T. Henwood, S. Heppell, R. Marquex-M, S. Murphy, W. Teas, N. Thompson, and B. Witherington). An Assessment of the Kemp's ridley sea turtle (*Lepidochelys kempii*) and loggerhead (*Caretta caretta*) sea turtle populations in the western North Atlantic. NOAA Technical Memorandum NMFS-SEFSC-409. 96 pp.

Classification

This proposed rule has been determined to be not significant for purposes of Executive Order 12866.

The ESA provides the statutory basis for the rule.

NMFS prepared a draft EA/RIR for this proposed rule that discusses the impact on the environment as a result of this proposed rule. A copy of the draft EA/RIR is available from NMFS (see **ADDRESSES**).

The Chief Counsel for Regulation of the Department of Commerce certified to the Chief Counsel for Advocacy of the Small Business Administration that this proposed rule, if adopted, would not have a significant economic impact on a substantial number of small entities.

Fishermen may be adversely affected by this proposed rule primarily in the following ways: possible shrimp loss due to the increase in the size of the TED opening and additional costs to retrofit current TEDs in order to meet proposed minimum grid and opening sizes.

The increase in the TED opening to a minimum of 71 inch (180.3 cm) straight-line stretched mesh would apply to all shrimp fishermen in the known universe of shrimp trawlers (15,096). This TED opening requirement would be expected to result in a 1-3 percent loss which is not statistically different from zero. Assuming a 2 percent shrimp loss, the estimated annual real profits by size category, and the number of fishing craft per category, the estimated impacts in terms of lost real profits per year by size category would be as follows: $582,600 for state registered boats, $251,812 for vessels less than 45 feet (13.7 m), $205,869 for vessels between 45 and 60 feet (13.7 and 18.3 m), and $389,844 for vessels greater than 60 feet (18.3 m). Thus, the total annual loss of profits for the industry would be $1,430,125. Applying the standard discount rate of 7 percent over a 5 year time period generates a loss of $5,863,795 in real profits. Shrimpers would have an option to use the double cover flap TED instead of the TED opening with a minimum of 71 inch (180.3 cm) straight-line stretch mesh. The double cover flap TED was tested to determine its ability to retain shrimp when compared to a commercial TED with a standard flap. The double cover flap TED gained 0.00257 pounds (1.1 gram) of shrimp per tow when compared to the TED with the standard flap. Assuming shrimpers chose this option, there would be no expectation of a 2 percent shrimp loss.

Many shrimpers who operated in the areas specified in the leatherback conservation zone regulation and were required to use the leatherback modification in the past due to emergency rules issued by NMFS, continued to use the modification after it was no longer required because they thought it performed better than the standard TED in retaining shrimp. GADNR reports that up to 60 percent of their shrimp fishermen still use the leatherback modification after NMFS required them to use it during the spring of 1999. Nonetheless, it is not known whether a similar percentage of shrimp fishermen are using the leatherback modification in their TEDs in other states/areas.

The leatherback modification excludes large debris from the trawl which improves performance. Fishermen can also use long flaps on bottom opening TEDs in areas where short flaps must be used on bottom opening TEDs with the standard size opening. Longer flaps will likely increase shrimp retention. NMFS believes that the use of the leatherback modification and its possibility of increased performance from the exclusion of debris and the use of long flaps may benefit fishermen. The extent of these potential benefits is unknown.

Survey data suggest that costs will be incurred by all shrimp fishermen who must acquire a larger frame to meet the proposed grid size of a minimum inside measurement of 32 in (81 cm) by 32 in (81 cm) and those who must refit their existing TEDs to the new 35 in (89 cm) by 20 in (51 cm) requirement. On average, the cost of a new frame is estimated to be $85 and the cost of refitting to the new minimum size opening is $45. However, the survey data also indicate that the smallest grid sold by 4 of the 7 net shops would meet the new requirements proposed in this alternative. Based on this information and observations by enforcement personnel and NMFS' gear specialists, NMFS believes that the majority of shrimpers use grids that already meet the required minimum grid size proposed by this rule. Those that currently use grid sizes smaller than the proposed minimum will have a year to replace them, giving fishermen the opportunity to replace them as part of scheduled gear maintenance and replacement. Thus, there should be no additional costs beyond those incurred as a result of existing TED regulations.

Modifications needed to meet the proposed opening sizes should impose relatively few additional costs. Most fishermen and net shop owners can make the changes needed to enlarge the escape openings on their own. For those who cannot, NMFS' gear specialists will be available to help them modify their TEDs to meet the new requirements. Although no direct out of pocket expenses may be incurred, an opportunity cost of the time necessary to make these modifications should still be taken into account. Given the nature of the modifications, we estimate that an hour of the fisherman's time will be needed to complete this task. Assuming that the owner or captain is responsible for making such gear modifications, the average real hourly wage of first-line supervisors/mangers in the farming, fishing and forestry industries is the best measure of opportunity cost. This figure is currently estimated to be $11.49 according to the BLS. Although some fishermen may not incur this cost as a result of already using TEDs with larger openings, some may have to incur the out of pocket expense of $45 to have someone else do the modifications for them.

The disallowance of the hooped hard TED is expected to affect approximately 50 small entities in Louisiana that currently use these TEDs. Unlike the weedless TED, the hooped hard TED is a durable TED and one that cannot be converted to another type of TED. Thus, for these fishermen, even with a year to convert their TEDs, they would be forced to purchase complete and new TEDs. Based on the survey data, new TEDs in Louisiana cost approximately $200. Assuming that these fishermen use quad rig trawls (i.e., 4 nets), this part of the rule would require a one time expenditure of $800 per entity, or $40,000 in the aggregate.

NMFS also proposes to disallow the use of weedless and Jones TEDs. Current information suggests that the Jones TED is not presently in use. The weedless TED is only known to be used in Texas. Information from boardings of shrimp fishing craft suggest that 15 percent of Texas shrimpers currently use the weedless TED. Since the weedless TED is known to be less durable than other TEDs, commonly needing to be replaced

every year, no additional costs are expected as a result of this requirement since this proposed alternative would not be implemented until 1 year after the final rule is published in the **Federal Register**. This period would give fishermen the opportunity to replace these types of gear as part of scheduled gear maintenance and replacement.

The changes to the bait shrimp exemption are not expected to generate any new impacts on shrimp fishermen. Clarification of TED requirements for bait shrimpers is needed because, in certain areas, many shrimp fishermen constantly switch back and forth between bait and food shrimping operations. Since these modifications do not impose TED requirements on any entity or operation that was not already covered by the existing TED requirements, no impacts would be expected.

Shrimpers deploying small try nets would be required to abide by existing tow time limitations, which are typically 55 minutes, in order to be exempt from existing TED requirements. If try nets are truly being used as a means to test fishing grounds for shrimp abundance, as opposed to an additional device to catch shrimp, then this requirement should not impose any costs since typical tow times for try nets are known to be 15-20 minutes.

In conclusion, the proposed changes to the sea turtle conservation regulation would not likely impose a significant economic impact on a substantial number of small entities. The increase in the minimum size openings and grid sizes for TEDs potentially impacts all shrimp trawlers in the Gulf of Mexico and South Atlantic which is estimated to be approximately 15,000 fishing craft.

The two criteria to be considered in determining the significance of economic impacts are the disproportionate effect and profitability between large and small businesses. Since all fishing trawling operations are considered small entities, the issue of a disproportionate effect is not applicable. And even if differences in fishing craft size are examined, in general, the impacts are proportionally the same across these size groups.

With the exception of the leatherback modification requirement and the TED modification costs, the components of this rule are not expected to reduce profits. The combination of shrimp loss as a result of using the TED opening with a minimum of 71 inch (180.3 cm) straight-line stretched mesh and TED modification expenses could have a significant economic impact. An average loss of 2 percent loss in profits could be expected only if several assumptions are met: (1) None of the potentially affected entities have already converted to using the leatherback modification; (2) none chose to use the double cover flap which showed no loss in shrimp. Since all these assumptions are unlikely to be met, the true loss in profits is likely much less and thus not significant.

Dated: September 24, 2001.

William T. Hogarth,

Assistant Administrator of Fisheries, National Marine Fisheries Service.

List of Subjects

50 CFR Part 222

Endangered and threatened species, Exports, Imports, Marine mammals, Transportation.

50 CFR Part 223

Administrative practice and procedure, Endangered and threatened species, Exports, Imports, Reporting and recordkeeping requirements.

For the reasons set out in the preamble, 50 CFR parts 222 and 223 are proposed to be amended as follows:

PART 222—GENERAL ENDANGERED AND THREATENED MARINE SPECIES

1. The authority citation for part 222 continues to read as follows:

Authority: 16 U.S.C. 1531-1544; and 16 U.S.C. 742a *et seq.*, unless otherwise noted.

§ 222.102 [Amended]

2. In § 222.102, the definitions: ''Atlantic Shrimp Fishery--Sea Turtle Conservation Area (Atlantic SFSTCA)'', ''Gulf Shrimp Fishery--Sea Turtle Conservation Area (Gulf SFSTCA)'', and ''Leatherback conservation zone'' are removed.

PART 223—THREATENED MARINE SPECIES AND ANADROMOUS SPECIES.

3. The authority citation for part 223 continues to read as follows:

Authority: 16 U.S.C. 1531 *et seq.*

4. In § 223.206:

a. Paragraph (d)(2)(ii)(B)(*1*) is re-designated as paragraph (d)(2)(ii)(A)(*5*), and paragraphs (d)(2)(ii)(B)(*2*) and (*3*) are re-designated as paragraphs (d)(2)(ii)(B)(*1*) and (*2*), respectively.

b. Paragraph (d)(2)(iv) is removed, and paragraph (d)(5) is removed and reserved.

c. Paragraph (d)(2)(ii)(A)(*2*) is revised to read as follows:

§ 223.206 Exceptions to prohibitions relating to sea turtles.

* * * * *

(d) * * *

(2) * * *

(ii) * * *

(A) * * *

(*2*) Is a bait shrimper that retain all live shrimp on board with a circulating seawater system, if it does not possess more than 32 pounds (14.5 kg) of dead shrimp on board, if it has a valid original state bait-shrimp license, and if the state license allows the licensed vessel to participate in the bait shrimp fishery only;

* * * * *

5. In § 223.207:

a. Paragraph (a) introductory text and paragraphs (a)(3), (a)(4), (a)(6) are revised; paragraphs (a)(7)(i) and (a)(8)(i) are removed; paragraphs (a)(7)(ii) and (a)(8)(ii) are re-designated as paragraphs (a)(7)(i) and (a)(8)(i), respectively, and revised; and paragraphs (a)(7)(ii) and (a)(8)(ii) are reserved;

b. Paragraph (b)(2) is removed and reserved;

c. Paragraph (c)(1)(iv) is revised;

d. Paragraph (d)(2) is removed; paragraph (d)(3) is re-designated as paragraph (d)(2) and revised; and paragraphs (d)(4) and (d)(5) are re-designated as (d)(3) and (d)(4), respectively, to read as follows:

§ 223.207 Approved TEDs.

* * * * *

(a) *Hard TEDs.* Hard TEDs are TEDs with rigid deflector grids, considered single-grid hard TEDs such as the Matagorda and Georgia TED (Figures 3 & 4 to this part). Hard TEDs complying with the following generic design criteria are approved TEDs:

* * * * *

(3) *Angle of deflector bars.* (i) The angle of the deflector bars must be between 30° and 55° from the normal, horizontal flow through the interior of the trawl.

(A) The deflector bars run from top to bottom and are attached to the bottom of the TED frame. The angle of the bottom most 4 inches (10 cm) of each deflector bar, measured along the bars, must not exceed 45° (Figures 14A and 14B to this part).

(B) [Reserved]

(ii) [Reserved]

(4) *Space between bars.* The space between deflector bars and between the deflector bars and the TED frame must not exceed 4 inches (10.2 cm). The deflector bars must be firmly attached to the TED frame at both ends.

* * * * *

(6) *Position of the escape opening.* The escape opening must be made by removing a rectangular section of webbing from the trawl centered on and immediately forward of the frame at either the top or bottom of the net when

the net is in the deployed position. The escape opening must be at the top of the net when the slope of the deflector bars from forward to aft is upward, and must be at the bottom when such slope is downward. The passage from the mouth of the trawl through the escape opening must be completely clear of any obstruction or modification.

(7) * * *

(i) *Single-grid hard TEDs.* On a single-grid hard TED, the cut for the escape opening cannot be narrower than the outside width of the TED frame minus 4 inches (10.2 cm) on both sides of the grid, when measured as a straight line width. The overall size of the escape opening must match one of the following specifications:

(A) *Standard opening.* The two forward cuts of the escape opening must not be less than 20 inches (51 cm) long from the points of the cut immediately forward of the TED frame. The resultant length of the leading edge of the escape opening cut must be a minimum of 71 inches (180 cm). (Figure 1A of this part illustrates the dimensions of these cuts). A webbing flap, as described in (d)(3)(i) of this section, may be used with this escape hole. The resultant opening with a webbing flap must have a minimum width of 71 inches (180 cm) straight-line stretched mesh (Figure 1C of this part). The circumference of the exit opening must be 142 inches (361 cm) when stretched.

(B) *Double cover flap TED opening.* The two forward cuts of the escape opening must not be less than 20 inches (51 cm) long from the points of the cut immediately forward of the TED frame. The resultant length of the leading edge of the escape opening cut must be no less than 56 inches (142 cm)(Figure 16 of this part illustrates the dimensions of these cuts). A webbing flap, as described in (d)(3)(ii) of this section, may be used with this escape hole.

(ii) [Reserved]

(8) * * *

(i) *Single-grid hard TED.* A single-grid hard TED must have a minimum inside horizontal and vertical measurement of 32 inches (81 cm). The required inside measurement must be at the mid-point of the deflector grid.

(ii) [Reserved]

* * * * *

(c) * * *

(1) * * *

(iv) *Escape Opening.* A horizontal cut extending from the attachment of one side of the deflector panel to the trawl to the attachment of the other side of the deflector panel to the trawl must be made in a single row of meshes across the top of the trawl and measure at least 96 inches (244 cm) in taut width. All trawl webbing above the deflector panel between the 96-inch (244-cm) cut and edges of the deflector panel must be removed. A rectangular flap of nylon webbing not larger than 2-inch (5.1-cm) stretched mesh may be sewn to the forward edge of the escape opening. The width of the flap must not be larger than the width of the forward edge of the escape opening. The flap must not extend more than 12 inches (30.4 cm) beyond the rear point of the escape opening. The sides of the flap may be attached to the top of the trawl but must not be attached farther aft than the row of meshes through the rear point of the escape opening. One row of steel chain not larger than 3 /16 inch (4.76 mm) may be sewn evenly to the back edge of the flap. The stretched length of the chain must not exceed 96 inches (244 cm).

* * * * *

(d) * * *

(2) *Webbing flap.* A webbing flap may be used to cover the escape opening under the following conditions: No device holds it closed or otherwise restricts the opening; it is constructed of webbing with a stretched mesh size no larger than 1 5/8 inches (4.1 cm); it lies on the outside of the trawl; it is attached along its entire forward edge forward of the escape opening; it is not attached on the sides beyond the row of meshes that lies 6 inches (15.2 cm) behind the posterior edge of the grid. The sides of the flap must be sown on the same row of meshes fore and aft. The flaps may not overlap the escape hole cut by more than 3 meshes on either side.

(i) *Standard TED flap.* The flap must be a 133-inch (338-cm) by 58-inch (148-cm) piece of webbing. The 133-inch (338-cm) edge of the flap is attached to the forward edge of the opening (71-inch (180-cm) edge). The sides of the flap may overlap the exit hole on either side by no more than 5 inches (13 cm). The flap may extend no more than 24 inches (61 cm) behind the posterior edge of the grid (Figure 1B illustrates this flap).

(ii) *Double cover flap TED flap.* This flap must be composed of two equal size rectangular panels of webbing. Each panel must be no less than 58 inches (147 cm) wide and may overlap each other no more than 15 inches (38 cm). The panels may only be sewn together along the leading edge of the cut. The edge of the panels may be attached 6 inches (15 cm) behind posterior edge of grid, the end of each panel must not extend more than 6 inches (15 cm) past the posterior edge of the grid (Figure 16). The sides of the flap must be sown on the same row of meshes fore and aft. The flaps may not overlap the escape hole cut by more than 3 meshes on either side. Chafing webbing described in paragraph (d)(4) of this section may not be used with this type of flap.

* * * * *

6. In part 223:

a. Remove Figure 1, and remove and reserve Figures 2, 12A, 12B, and 15.

b. Add Figures 1A, 1B, and 1C to part 223.

c. Revise Figure 11 to read as follows:

BILLING CODE 3510–22–S

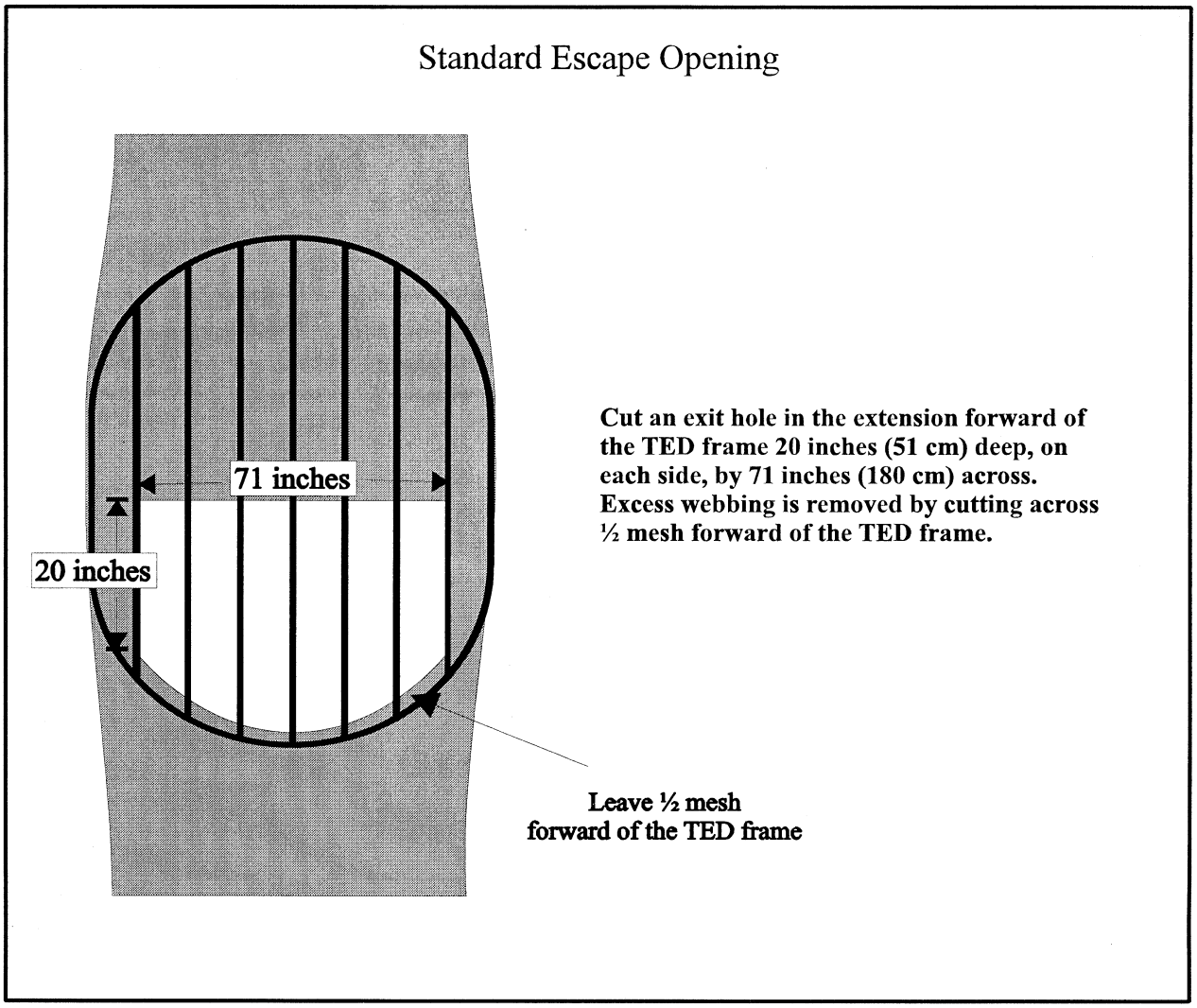

1A. Standard Opening

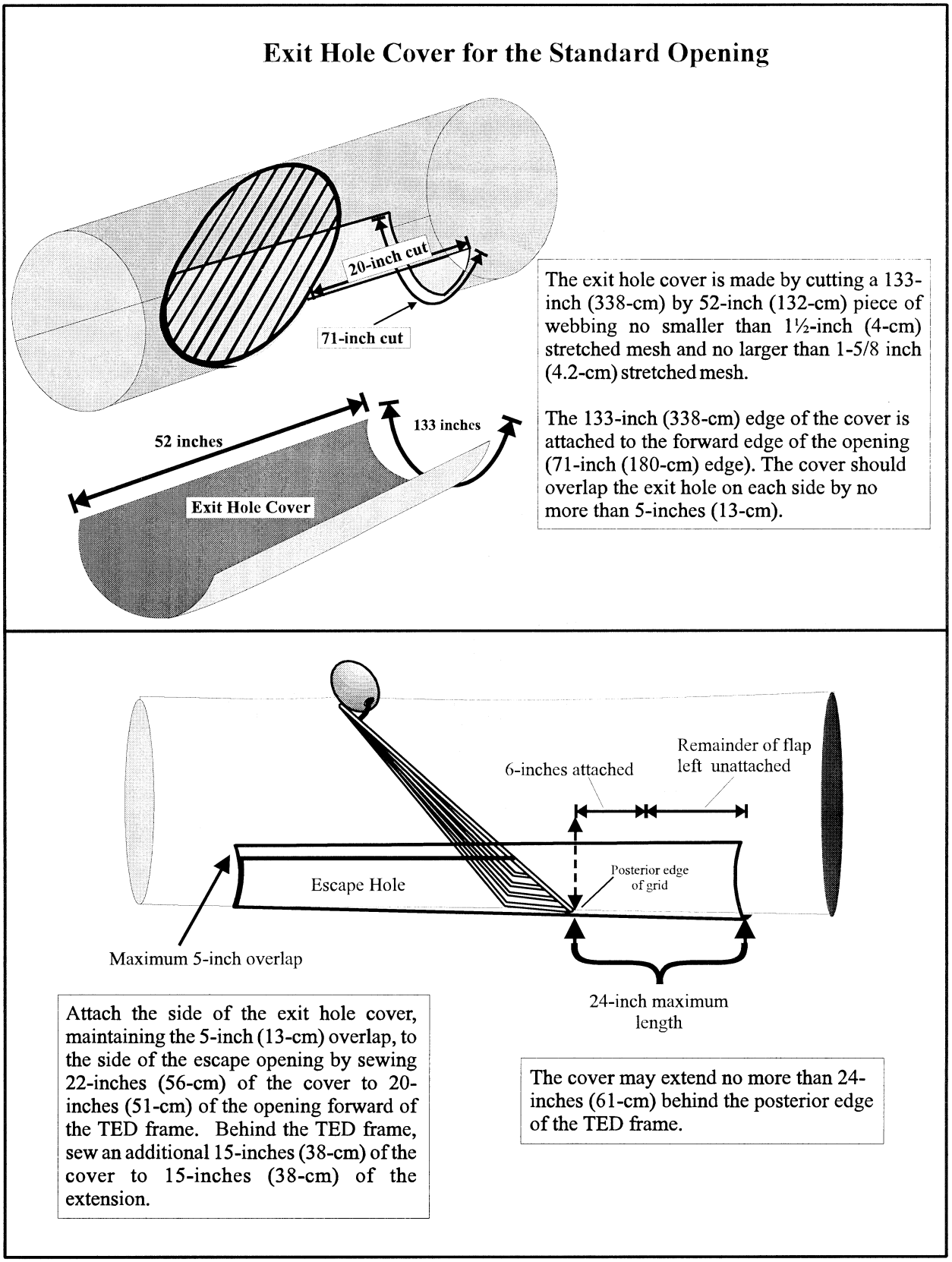

Figure 1B. Exit Hole Cover for the Standard Opening

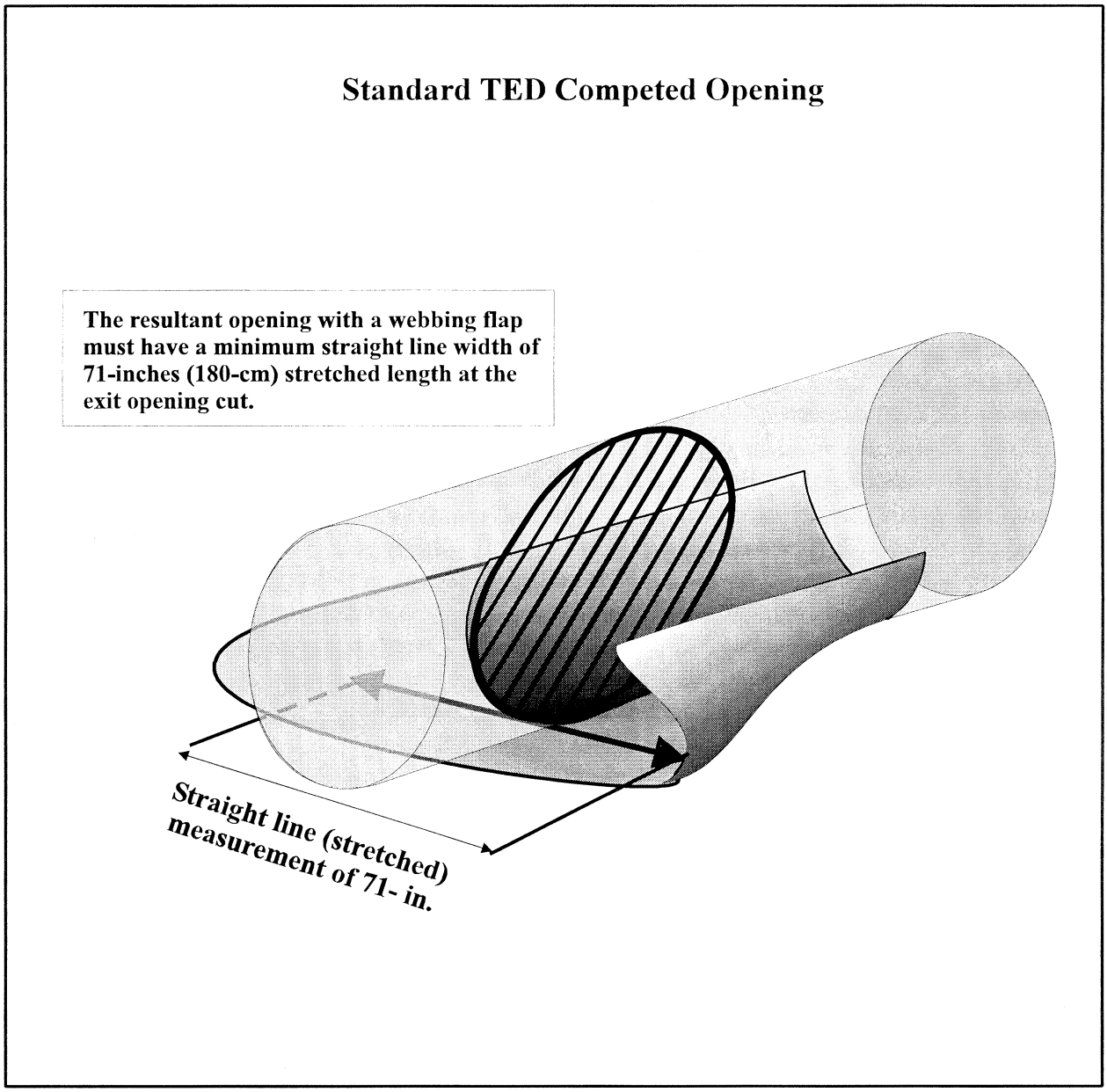

Figure 1C. Completed Standard TED Opening

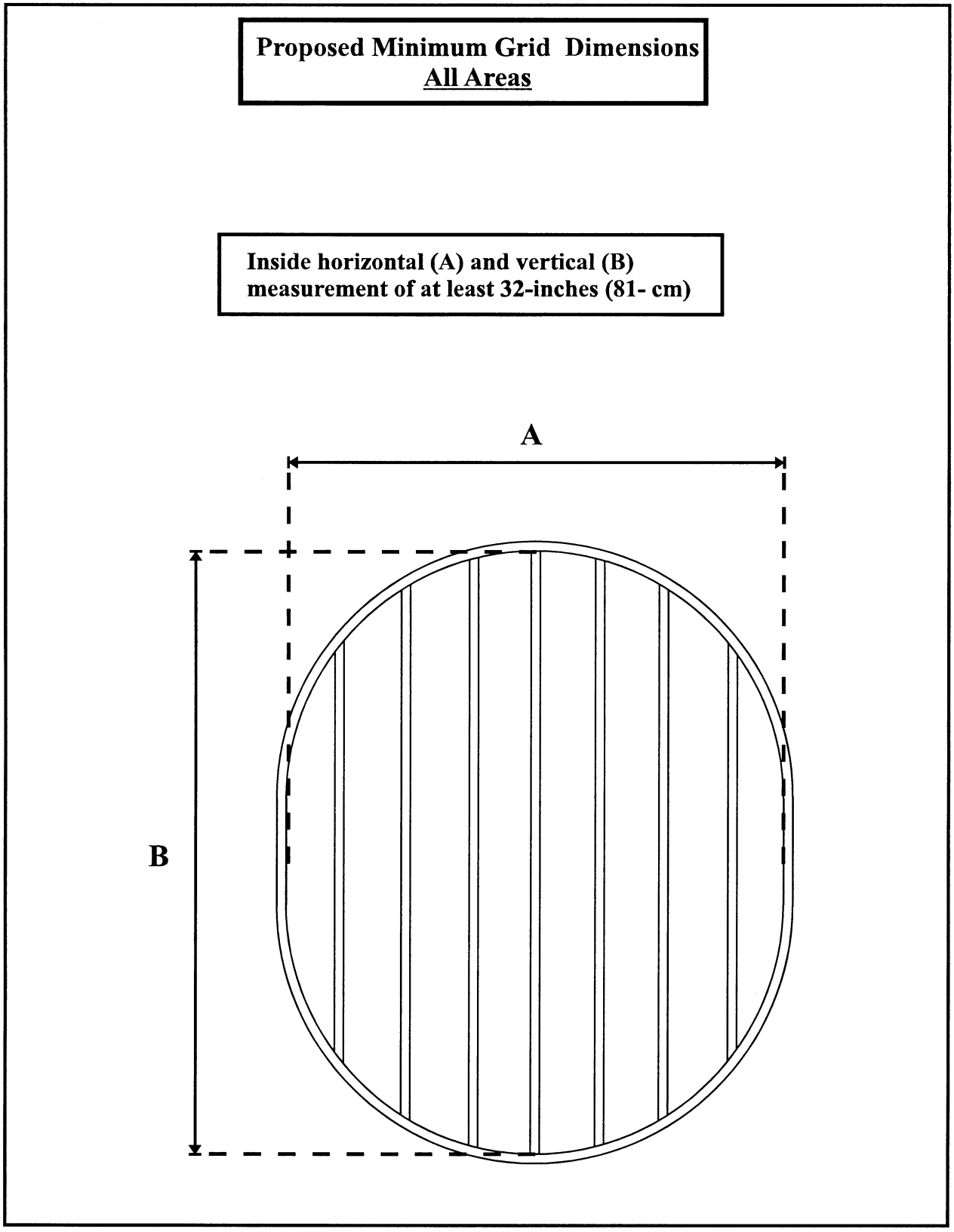

Figure 11. Standard Minimum Grid Size

[FR Doc. 01–24521 Filed 10–1–01; 8:45 am]
BILLING CODE 3510–22–C

DEPARTMENT OF COMMERCE

National Oceanic and Atmospheric Administration

50 CFR Part 229

[Docket No. 0011283341232–02; I.D. 091401B]

RIN 0648-AN88

Taking of Marine Mammals Incidental to Commercial Fishing Operations; Atlantic Large Whale Take Reduction Plan Regulations

AGENCY: National Marine Fisheries Service (NMFS), National Oceanic and Atmospheric Administration (NOAA), Commerce.

ACTION: Proposed rule; request for comments.

SUMMARY: NMFS proposes to amend the regulations that implement the Atlantic Large Whale Take Reduction Plan (ALWTRP) to clarify its authority to temporarily restrict the use of lobster and gillnet fishing gear within defined areas to protect North Atlantic right whales, and to establish criteria and procedures for implementing such restrictions north of 40° N. latitude, in order to further reduce risk of entanglement of right whales by such gear.

DATES: Comments on the proposed rule must be received by 5 p.m. EST on November 1, 2001.

ADDRESSES: Send comments on this proposed rule to the Assistant Regional Administrator for Protected Resources, Protected Resources Division, NMFS, Northeast Region, 1 Blackburn Dr., Gloucester, MA 01930. Comments will not be accepted if sent via e-mail or Internet. Copies of the Environmental Assessment/Regulatory Impact Review for this action can be obtained from the ALWTRP website listed under the Electronic Access portion of this document. Atlantic Large Whale Take Reduction Team (ALWTRT) meeting summaries, and progress reports on implementation of the ALWTRP may be obtained by writing Gregg LaMontagne, NMFS, Northeast Region, 1 Blackburn Dr., Gloucester, MA 01930 or Katherine Wang, NMFS, Southeast Region, 9721 Executive Center Dr., St.Petersburg, FL 33702–2432. For additional addresses and web sites for document availability see **SUPPLEMENTARY INFORMATION.**

FOR FURTHER INFORMATION CONTACT: Gregg LaMontagne, NMFS, Northeast Region, 978–281–9291; Katherine Wang, NMFS, Southeast Region, 727–570–5312; or Patricia Lawson, NMFS, Office of Protected Resources, 301–713–2322.

SUPPLEMENTARY INFORMATION:

Electronic Access

Several of the background documents for the ALWTRP and the take reduction planning process can be downloaded from the ALWTRP web site at http://www.nero.nmfs.gov/whaletrp/. Copies of the most recent marine mammal stock assessment reports may be obtained by writing to Richard Merrick, NMFS, 166 Water St., Woods Hole, MA 02543 or can be downloaded from the Internet at http://www.wh.whoi.edu/psb/sar2000.pdf. In addition, copies of the document entitled ''Defining Triggers for Temporary Area Closures to Protect Right Whales from Entanglements: Issues and Options'' are available by writing to Gregg LaMontagne, NMFS, Northeast Region, 1 Blackburn Dr., Gloucester, MA 01930 or can be downloaded from the Internet at http://www.nero.nmfs.gov/whaletrp/.

Background

The ALWTRP was developed pursuant to section 118 of the Marine Mammal Protection Act (MMPA) to reduce the level of serious injury and mortality of four species of large whales (fin, humpback, minke, and North Atlantic right) in East Coast lobster trap and finfish gillnet fisheries. The background for the take reduction planning process and development of the ALWTRP is provided in the preambles to the proposed (62 FR 16519, April 7, 1997), the interim final (62 FR 39157, July 22, 1997), final (64 FR 7529, February 16, 1999), and interim final (65 FR 80368, December 21, 2000) rules implementing the ALWTRP. Copies of these documents and supporting Environmental Assessments are available from the NMFS, Northeast Region (see **ADDRESSES**).

The ALWTRP is a multi-faceted plan that includes area closures, gear requirements in areas open to fixed gear fishing, gear research to develop new modifications to current practices and/or fishing techniques, a right whale Sighting Advisory System, and a disentanglement program to free whales caught in fishing gear.

The ALWTRP (50 CFR 229.32) uses time/area closures to protect right whales in critical habitat areas. However, recent surveys have shown that right whales also aggregate outside of critical habitat areas, and outside of those areas otherwise periodically closed to fishing. To protect right whales found in concentrations outside of the existing critical habitat areas and areas periodically closed to certain fisheries, NMFS proposes to clarify and use its authority under 50 CFR § 229.32 to temporarily restrict the use of lobster traps and/or gillnet gear in areas where right whales aggregate.

NMFS re-convened the ALWTRT twice, once in April and once in May 2000, to develop the details of a Dynamic Area Management (DAM) process to temporarily require or remove restrictions in areas quickly due to the unexpected presence or absence of right whales. At these meetings, the ALWTRT discussed and developed several models for ''triggering'' a DAM zone based on whale density in a given area. However, the ALWTRT did not produce consensus recommendations on any one set of whale density criteria and/or triggering levels. It recommended that NMFS take into account ALWTRT discussions in developing this proposed rule.

This proposed rule would clarify NMFS' authority under § 229.32 to implement DAM zones, and establish criteria and procedures to implement them.

The Northeast Fisheries Science Center (NEFSC) analyzed historic sighting and survey data, considered the ALWTRT discussions, and developed criteria based on the analysis and discussions. NEFSC's findings are contained in a document entitled ''Defining Triggers for Temporary Area Closures to Protect Right Whales from Entanglements: Issues and Options'' (see **ADDRESSES** for copies). NMFS proposes to use the whale density threshold and other criteria described in the above mentioned paper to implement DAM zones under § 229.32.

A DAM zone would be triggered by a single reliable report from a qualified individual of 3 or more right whales within an area (75 nautical mils (nm^2) (139 km^2)) such that right whale density is equal to or greater than 0.04 right whales per nm2 (1.85 km^2). A qualified individual is an individual ascertained by NMFS to be reasonably able, through training or experience, to identify a right whale. Such individuals include, but are not limited to, NMFS staff, U.S. Coast Guard and Navy personnel trained in whale identification, scientific research survey personnel, whale watch operators and naturalists, and mariners trained in whale species identification through disentanglement training or some other training program deemed adequate by NMFS. A reliable report would be a credible right whale sighting based upon which a DAM zone would be triggered. Areas for consideration for DAM are limited to areas north of 40° N latitude, given animals south of this area have not been observed feeding or

otherwise grouped together for extended periods of time.

Analyses of historical sighting data indicate that this criterion, of at least 3 whales in an area with a density greater than or equal to 0.04 right whales per nm2 (1.85 km2), provides for a level of density where whales are likely to maintain residency in an area for at least 10 to 20 days. Residency indicates that whales may be actively feeding and, therefore, more vulnerable to entanglement. Operationally, NMFS would use the following procedures and criteria to establish a DAM zone:

1. A circle with a radius of at least 3 nm (5.6 km) would be drawn around each individual sighting (event). This radius would be adjusted for the number of right whales seen in the sighting such that the density of 4 right whales per 100 nm2 (185.3 km^2) is maintained. The length of the radius would be determined by taking the inverse of the 4 right whales per 100 nm2 (185.3 km^2) density, which is 24 nm2 (44.5 km^2) per whale. That figure is equivalent to a radial distance of 2.77 nm (5.13 km) rounded up to 3 nm (5.6 km) for a single right whale sighted (3.91 nm (7.25 km) rounded up to 4 nm (7.41 km) for two whales, 4.79 nm (8.88 km) rounded up to 5nm (9.27 km) for three whales, etc).

2. If any circle or group of contiguous circles includes 3 or more right whales, this core area and its surrounding waters would be a candidate DAM zone.

Once NMFS identifies a core area containing 3 or more right whales, as described here, it would expand this initial core area to provide a buffer area in which the right whales could move and still be protected. Operationally, NMFS would determine the extent of the DAM zone as follows:

1. A 15 NM (27.8 km) radius from the event epicenter would be used to draw a larger circular zone around each core area encompassing a concentration of right whales. The event epicenter is the geographic center of all sightings on the first day of an event.

2. The DAM zone would then be defined by latitude and longitude lines drawn outside but tangential to the circular buffer zone(s).

Once a DAM zone is identified, NMFS would determine whether to impose, in the zone, restrictions on fishing and/or fishing gear. This determination would be based on a variety of factors, including but not limited to: the location of the DAM zone with respect to other fishery closure areas, weather conditions as they relate to the safety of human life at sea, the type and amount of gear already present in the area, and a review of recent right whale entanglement and mortality data. If NMFS determines restrictions are necessary in the zone, NMFS may require removal of all gillnet and lobster trap gear from the zone within 2 days of the publication of a notice in the **Federal Register**. NMFS may allow fishing within a DAM zone with specified gear if that gear is determined to sufficiently reduce the risk of entanglement to right whales. NMFS may identify acceptable fishing practices and gear in a **Federal Register** notice. Gear not in compliance with the imposed restriction may not be set in the DAM zone after the effective date of the restriction. NMFS will publish a notice in the **Federal Register** announcing the establishment of the zone with restrictions imposed. It will also announce them immediately upon filing the notice with the office of the **Federal Register**, which is generally 3 to 5 days before publication of the notice in the **Federal Register**.

If NMFS decides not to implement restrictions within a DAM zone, it would issue an alert to fishermen using appropriate media to inform them of the fact that right whale density in a certain area has triggered a DAM zone. In addition, NMFS would provide detailed information on the location of the DAM zone and the number of animals sighted within it. Furthermore, NMFS would request that fishermen voluntarily remove lobster trap and gillnet gear from a DAM zone and that no additional gear be set inside it.

NMFS proposes to maintain a DAM zone for a minimum of 15 days from the date NMFS issues an alert (in the case of a zone where no restrictions are imposed), or 15 day period from the effective date of restrictions (in the case where restrictions are imposed). At the conclusion of a 15-day period, the DAM zone would automatically expire, unless NMFS continues the zone to further protect concentrations of right whales. Each extension would be for up to 15 days unless NMFS extends the time frame based on additional sightings.

NMFS may remove restrictions on the DAM zone or rescind an alert prior to its automatic expiration if there are survey efforts and no confirmed sightings of right whales by qualified individuals for 1 week or if other credible evidence indicates that right whales have left the designated zone. NMFS would notify the public by issuing a notice in the **Federal Register** and through other appropriate media.

On May 9, 2001, NMFS used the criteria developed by the NEFSC to identify a restricted area for a group of 13 North Atlantic right whales in an area commonly called the Wilkinson Basin. This aggregation included several cow-calf pairs. A **Federal Register** notice restricting fishing for a 15-day period in the Wilkinson Basin area contained the following requirements:

1. Removal of all gillnet gear within 48 hours of publication of the notice in the **Federal Register**.

2. Removal of at least 50 percent of vertical lines from all lobster gear within 48 hours of publication of the notice in the **Federal Register**.

The May 2001 closure was an important step toward responding quickly to the presence of right whales in areas where gillnet and lobster gear may present significant entanglement risks. However, NMFS received public comments from fishermen, conservationists, and state managers regarding the DAM closure in the Wilkinson Basin and the efficacy of DAM in general. For example, representatives from the lobster fishery were concerned that, as implemented, the DAM restrictions did not give them enough time to remove their gear from the water and that the DAM zone covered too vast an area. NMFS will publish a notice in the **Federal Register** establishing the zone and restrictions imposed and will announce them immediately upon filing the notice with the office of the Federal Register, which is generally 3 to 5 days before publication in the **Federal Register**.

In addition, conservation groups indicated that the requirement to remove 50-percent of vertical lines in lobster gear presented significant enforcement problems. We agree that enforcement of a 50 percent removal of vertical lines from lobster gear would be difficult and, furthermore, do not believe that it would sufficiently reduce the risk to right whales and have therefore proposed a complete removal of all lobster gear in DAM zones. Finally, some state managers desired more clarification regarding the role of the states when a DAM closure is triggered. The states were also interested in determining whether a Federal DAM mechanism would preempt a state initiated response to unusual or unexpected sightings of right whales within state waters. A Federal DAM would preempt a state initiated response to unusual or unexpected sightings of right whales within state waters unless the state response was equally or more protective than the Federal DAM. Based on the scope of the responses received, NMFS has decided to issue this proposed rule to clarify its authority to implement future DAM closures, and to establish criteria and procedures for implementing DAM zones.

It is important to note that the agency is also in the process of developing proposed rules to implement Seasonal Area Management (SAM) and gear modifications to the ALWTRP for lobster trap gear in the offshore lobster waters, southern nearshore lobster waters and changes to the lobster and gillnet take reduction technology lists. Under SAM, restrictions would be placed in areas more predictably used by right whales on a seasonal basis. NMFS believes that implementation of SAM would reduce the need for use of DAM restricted zones to respond to observed concentrations of right whales.

Classification

NMFS prepared the following initial regulatory flexibility analysis that describes the economic impact for this proposed rule, which if adopted, would have on small entities:

This proposed rule would establish criteria and procedures to temporarily restrict fishing gear within defined areas on an expedited basis to protect concentrations of North Atlantic right whales. The objective of this proposed rule, issued pursuant to authority in section 118 of the MMPA, is to reduce the level of serious injury to and mortality of North Atlantic right whales in East Coast lobster trap and finfish gillnet fisheries. Since DAM will be used to respond to unusual and unexpected sightings of right whales, it is difficult for NMFS to predict exactly where DAM zones may be implemented in the future. Therefore, providing an accurate estimate of the number of small entities that will be affected is problematic. Based on the available data, a maximum of 7,539 state and federally permitted lobster vessels and 310 gillnet vessels, which includes federally permitted vessels and may include state permitted vessels, could be affected by the proposed action. However, NMFS does not expect that number of vessels to be affected by any one DAM closure because of the limited size of a DAM zone. For example, the retrospective analysis of the April-May 2000 DAM Area 1 estimated that 210 lobster vessels and 42 gillnet vessels would have been affected by the hypothetical closure. This proposed rule contains no reporting, recordkeeping, or other compliance requirements. There are no relevant Federal rules that duplicate, overlap, or conflict with the proposed rule.

Five alternatives were evaluated including a status quo or ''no action'' alternative, the proposed action, and three other alternatives. The No Action alternative would leave in place the existing regulations promulgated under the ALWTRP, but would not clarify NMFS' authority to implement DAM zones and would not identify criteria and procedures to implement them. The existing regulations already state that the Assistant Administrator (AA) may revise the existing regulations through notice in the **Federal Register** in order to close areas, open areas, and change boundaries of a closed area, or for a similar purpose (section 229.32(g)(2)). It is difficult to quantify the economic impacts of NMFS discretion in using § 229.32(g)(2) to implement DAM zones since the trigger used, restricted zone and restrictions implemented are all unknown at this time in addition to the unknowns of the particular event such as the time and location of the restriction and the level of fishing effort at that time and location.

The proposed action (PA) is to amend the regulations implementing the ALWTRP to clarify authority for implementing DAM zones, and to establish criteria and procedures to temporarily restrict fishing gear within defined areas on an expedited basis to protect concentrations of North Atlantic right whales. The analysis showed 210 lobster vessels fishing in the hypothetical DAM Area 1 in April and May, 2000. The total industry cost of removing the gear was estimated at $342K and the cost per vessel ranges between $328 and $3,011 with an average of $1,600. The economic analysis of DAM Area 1 determined 42 gillnet vessels were fishing in DAM Area 1 between April 1 and May 31, 2000, according to the Vessel Trip Reporting data. The total industry cost to remove sink gillnet gear would have been $7,081, with a cost per vessel of $170.

The third alternative considered having different triggers within each respective state jurisdiction as discussed by the ALWTRT. The State of Maine proposed the use of a trigger of 8 right whales in a 7.5 nm2 (13.9 km^2) area on two consecutive observations that would result in a core area of 7.5 nm2 (13.9 km^2). The Commonwealth of Massachusetts proposed the use of a trigger of 5 right whales in a 15 nm2 (27.8 km^2) area based on two sightings. The State of Rhode Island proposed the use of a trigger of 8 whales. Under Maine's proposal there would have been no closures based on sightings data from 2000. Under Massachusetts' proposal, there would have been one closure based on sightings data from 2000. The total cost of closing this one area in 2000 to the lobster fleet would have been $16.3K. Total industry costs to the sink gillnet fleet for closing one area in 2000 would have been $13.7K.

The fourth alternative would trigger a DAM zone using the observation of one right whale on a single day. In addition, a buffer of 15 NM (27.8 km) would be drawn around each individual animal observed. The economic analysis of 2000 sightings data indicates that 17 right whales would not be protected by the six closures under the PA plan. Total industry costs of the lobster fleet would be $3.5M. This includes $0.3M for the 17 right whales not protected under the PA plan, plus $3.2M for the PA plan. Total industry costs of the sink gillnet fleet would be $2.9M. This includes $0.23M for the 17 right whales not protected under the PA plan, plus $2.68M for the PA plan.

Under the fifth alternative, the trigger and buffer would be the same as in the proposed action (i.e., the observation of 4 right whales in a 100 nm2 (185.3 km2) area and the buffer would be 15 nm [27.8 km]), however, instead of imposing a restriction requiring removal of all lobster gear, a 50-percent reduction in vertical lines would be required for lobster gear. The restrictions for gillnet gear would be the same as in the proposed action, which requires complete removal. Based on right whale sightings data in 2000, six areas could potentially be closed (Clapham and Pace, 2000). Total industry cost to remove one buoy line from six potential closures in 2000 is $0.2M. Area costs range from a high of $49.7K in DAM Area 1 to $24.3K in DAM Area 6. Based on the home port analysis of DAM Area 1, the average cost to remove one buoy line is $237 per vessel. The total industry cost for sink gillnet vessels is the same as in the PA plan.

This proposed rule has been determined to be not significant for the purposes of Executive Order 12866.

On June 14, 2001, under the Endangered Species Act (ESA), NMFS issued four Biological Opinions (BiOps) as the result of ESA section 7 consultations on the three Fishery Management Plans (FMP) for the monkfish, spiny dogfish, and multispecies fisheries, and the Federal regulations for the lobster fishery. Pursuant to the consultation's finding that the FMPs and lobster regulations were likely to jeopardize the continued existence of right whales, NMFS defined a Reasonable and Prudent Alternative (RPA) with multiple management components to the proposed action. Among the RPA elements was a mechanism for the expedited closure of areas outside designated right whale critical habitat, which NMFS has termed Dynamic Area Management (DAM). The BiOps require NMFS to approve a rule

proposing criteria and procedures for implementing DAM by September 30, 2001.

References

ALWTRT. 2001. Draft Atlantic Large Whale Take Reduction Team Meeting Summary. Summary prepared by RESOLVE, Inc. and submitted to the National Marine Fisheries Service July 16, 2001.

Bisack, K. 2001. Economic analysis of Wilkinson Basin closure. Northeast Fisheries Science Center, 166 Water Street, Woods Hole, MA. 02543.

Bisack, K. 2001. (Draft) Economic analysis of dynamic area management (DAM). Northeast Fisheries Science Center, 166 Water Street, Woods Hole, MA. 02543.

Clapham, P.J. and R.M. Pace, III. 2001. Defining Triggers for Temporary Area Closures to Protect Right Whales from Entanglements: Issues and Options. Northeast Fisheries Science Center Reference Document 01-06. April 2001.

National Marine Fisheries Service. 2000. Environmental Assessment of the Atlantic Large Whale Take Reduction Plan and Implementing Regulations. NMFS. Northeast Region. December 2000.

National Marine Fisheries Service. 2001. Preliminary estimates of the revenue losses to the gillnet and lobster fleet in 1999 due to potential dynamic area closures to protect right whales. NMFS. Northeast Region. March 2001.

National Marine Fisheries Service. 2001. Endangered Species Act section 7 consultation. Biological opinion regarding Fishery Management Plans for monkfish, spiny dogfish, and multispecies and Federal regulations for American lobster. June 14, 2001.

Dated: September 26, 2001.

John Oliver,

Deputy Assistant Administrator for Operations, National Marine Fisheries Service.

For the reasons set out in the preamble, 50 CFR part 229 is proposed to be amended as follows:

PART 229—AUTHORIZATION FOR COMMERCIAL FISHERIES UNDER THE MARINE MAMMAL PROTECTION ACT OF 1972

1. The authority citation for part 229 continues to read as follows:

Authority: 16 U.S.C. 1361 *et seq.*

2. In § 229.2, a definition of ''Qualified individual'' and ''Reliable report'' are added to read as follows:

§ 229.2 Definitions.

* * * * *

Qualified individual means an individual ascertained by NMFS to be reasonably able, though training or experience, to identify a right whale. Such individuals include, but are not limited to, NMFS staff, U.S. Coast Guard and Navy personnel trained in whale identification, scientific research survey personnel, whale watch operators and naturalists, and mariners trained in whale species identification through disentanglement training or some other training program deemed adequate by NMFS.

* * * * *

Reliable report means a credible right whale sighting report based upon which a DAM zone would be triggered.

* * * * *

3. In § 229.32, paragraph (g)(3) is added to read as follows:

§ 229.32 Atlantic large whale take reduction plan regulations.

* * * * *

(g)***

(3) For the purpose of reducing the risk of fishery interactions with right whales, NMFS may establish a temporary Dynamic Area Management (DAM) zone in the following manner:

(i) *Trigger.* Upon receipt of a single reliable report from a qualified individual of three or more right whales within an area NMFS will plot each individual sighting (event) and draw a circle with a 3 nm (5.6 km) radius around it, which will be adjusted for the number of right whales sighted such that a density of at least 0.04 right whales per nm2 (1.85 km2) is maintained within the circle. If any circle or group of contiguous circles includes 3 or more right whales, NMFS would consider this core area and its surrounding waters a candidate DAM zone.

(ii) *DAM zone.* Areas for consideration for DAM zones are limited to areas north of 40° N latitude. Having identified a group of 3 or more right whales as candidates for protection, NMFS will define the core zone by the latitude and longitude lines tangential to the circular buffer zones drawn with a 15-nm (27.8 km) radius around the event epicenter of each core area identified in paragraph (g)(3)(i) of this section. The event epicenter is the geographic center of all sightings on the first day of an event, or sighting.

(iii) *Requirements and prohibitions within DAM zones.* Notice of specific area restrictions will be published in the **Federal Register** and will become effective 2 days after publication. Gear not in compliance with the imposed restrictions may not be set in the DAM zone after the effective date. NMFS may either:

(A) Require owners of gillnet and lobster gear set within the DAM zone to remove all such gear within 2 days after notice is published in the **Federal Register**, or

(B) Allow fishing within a DAM zone with gear modifications determined by NMFS to sufficiently reduce the risk of entanglement to right whales. Acceptable fishing practices and gear modifications would be identified in the **Federal Register** notice implementing the DAM zone.

(C) The determination of whether restrictions will be imposed within a DAM zone would be based on NMFS' review of a variety of factors, including but not limited to: the location of the DAM zone with respect to other fishery closure areas, weather conditions as they relate to the safety of human life at sea, the type and amount of gear already present in the area, and a review of recent right whale entanglement and mortality data.

(iv) *Restricted period.* Any DAM zone will remain in effect for a minimum period of 15 days. At the conclusion of the 15-day period, the DAM zone will expire automatically unless it is extended by subsequent publication in the **Federal Register**.

(v) *Extensions of the restricted period.* Any 15-day period may be extended if NMFS determines that the trigger established in paragraph (g)(3)(i) of this section continues to be met.

(vi) *Reopening of restricted zone.* NMFS may remove any gear restriction or prohibition and reopen the DAM zone prior to its automatic expiration if there are no confirmed sightings of right whales for at least 1 week, or other credible evidence indicates that right whales have left the DAM zone. NMFS will notify the public of the reopening of a DAM zone prior to the expiration of the 15 day period by issuing a notice in the **Federal Register** and through other appropriate media.

[FR Doc. 01–24541 Filed 9–26–01; 4:44 pm]

BILLING CODE 3510–22–S

Notices

Federal Register

Vol. 66, No. 191

Tuesday, October 2, 2001

This section of the FEDERAL REGISTER contains documents other than rules or proposed rules that are applicable to the public. Notices of hearings and investigations, committee meetings, agency decisions and rulings, delegations of authority, filing of petitions and applications and agency statements of organization and functions are examples of documents appearing in this section.

DEPARTMENT OF COMMERCE

International Trade Administration

[A–351–831, A–122–840, A–729–802, A–428–832, A–560–815, A–201–830, A–841–805, A–791–813, A–274–804, A–823–812, A–307–821]

Notice of Initiation of Antidumping Duty Investigations: Carbon and Certain Alloy Steel Wire Rod From Brazil, Canada, Egypt, Germany, Indonesia, Mexico, Moldova, South Africa, Trinidad and Tobago, Ukraine, and Venezuela

AGENCY: Import Administration, International Trade Administration, Department of Commerce.

ACTION: Initiation of antidumping duty investigations.

EFFECTIVE DATE: October 2, 2001.

FOR FURTHER INFORMATION CONTACT: Charles Riggle (Brazil, Canada, Mexico, South Africa, Trinidad and Tobago, and Venezuela), Robert James (Germany), Steve Bezirganian (Indonesia), Abdelali Elouaradia (Egypt and Moldova), and James Doyle (Ukraine) at (202) 482–0650, (202) 482–0649, (202) 482–1131, (202) 482–1374, and (202) 482–0159, respectively; Import Administration, International Trade Administration, U.S. Department of Commerce, 14th Street and Constitution Avenue, NW, Washington, DC 20230.

Initiation of Investigations

The Applicable Statute and Regulations

Unless otherwise indicated, all citations to the statute are references to the provisions effective January 1, 1995, the effective date of the amendments made to the Tariff Act of 1930, as amended (the Act), by the Uruguay Round Agreements Act (URAA). In addition, unless otherwise indicated, all citations to the Department's regulations are references to the provisions codified at 19 CFR Part 351 (2001).

The Petition

On August 31, 2001, the Department of Commerce (the Department) received a petition filed in proper form by the following parties: Co-Steel Raritan, Inc., GS Industries, Keystone Consolidated Industries, Inc., and North Star Steel Texas, Inc. (collectively, the petitioners). The Department received information supplementing the petition from the petitioners throughout the 20-day initiation period.

In accordance with section 732(b) of the Act, the petitioners allege that imports of carbon and certain alloy steel wire rod (CASWR) from Brazil, Canada, Egypt, Germany, Indonesia, Mexico, Moldova, South Africa, Trinidad and Tobago, Ukraine, and Venezuela are being, or are likely to be, sold in the United States at less than fair value within the meaning of section 731 of the Act, and that such imports are materially injuring, or are threatening to materially injure, an industry in the United States.

The Department finds that the petitioners filed this petition on behalf of the domestic industry because they are interested parties as defined in sections 771(9)(C) and 771(9)(D) of the Act and have demonstrated sufficient industry support with respect to each of the antidumping investigations that they are requesting the Department to initiate. (*See* the *Determination of Industry Support for the Petition* section below.)

Scope of Investigations

The merchandise covered by these investigations is certain hot-rolled products of carbon steel and alloy steel, in coils, of approximately round cross section, 5.00 mm or more, but less than 19.00 mm, in solid cross-sectional diameter.

Specifically excluded are steel products possessing the above-noted physical characteristics and meeting the Harmonized Tariff Schedule of the United States (HTSUS) definitions for (a) stainless steel; (b) tool steel; (c) high nickel steel; (d) ball bearing steel; and (e) concrete reinforcing bars and rods. Also excluded are (f) free machining steel products (*i.e.,* products that contain by weight one or more of the following elements: 0.03 percent or more of lead, 0.05 percent or more of bismuth, 0.08 percent or more of sulfur, more than 0.04 percent of phosphorus, more than 0.05 percent of selenium, or more than 0.01 percent of tellurium). All products meeting the physical description of subject merchandise that are not specifically excluded are included in this scope.

The products under investigation are currently classifiable under subheadings 7213.91.3010, 7213.91.3090, 7213.91.4510, 7213.91.4590, 7213.91.6010, 7213.91.6090, 7213.99.0031, 7213.99.0038, 7213.99.0090, 7227.20.0010, 7227.20.0090, 7227.90.6051 and 7227.90.6058 of the HTSUS. Although the HTSUS subheadings are provided for convenience and customs purposes, the written description of the scope of this proceeding is dispositive.

Determination of Industry Support for the Petition

Section 771(4)(A) of the Act defines the ''industry'' as the producers of a domestic like product. Thus, when determining the degree of industry support, the statute directs the Department to look to producers and workers who produce the domestic like product. The International Trade Commission (ITC), which is responsible for determining whether ''the domestic industry'' has been injured, must also determine what constitutes a domestic like product in order to define the industry. While both the Department and the ITC must apply the same statutory definition regarding the domestic like product (section 771(10) of the Act), they do so for different purposes and pursuant to separate and distinct authority. In addition, the Department's determination is subject to limitations of time and information. Although this may result in different definitions of the like product, such differences do not render the decision of either agency contrary to the law.[1]

Section 771(10) of the Act defines the domestic like product as ''a product which is like, or in the absence of like, most similar in characteristics and uses with, the article subject to an investigation under this subtitle.'' Thus, the reference point from which the domestic like product analysis begins is ''the article subject to an investigation,''

[1] *See Algoma Steel Corp. Ltd.*, v. *United States*, 688 F. Supp. 639, 642–44 (CIT 1988); *High Information Content Flat Panel Displays and Display Glass from Japan: Final Determination; Rescission of Investigation and Partial Dismissal of Petition*, 56 FR 32376, 32380–81 (July 16, 1991).

i.e., the class or kind of merchandise to be investigated, which normally will be the scope as defined in the petition. Moreover, the petitioners do not offer a definition of domestic like product distinct from the scope of the investigation.

The petition covers carbon and certain steel wire rod as defined in the *Scope of the Investigation* section, above, a single class or kind of merchandise. The Department has no basis on the record to find the petitioners' definition of the domestic like product to be inaccurate. The Department, therefore, has adopted the domestic like product definition set forth in the petition.

Section 732(b)(1) of the Act requires that a petition be filed on behalf of the domestic industry. Section 732(c)(4)(A) of the Act provides that a petition meets this requirement if the domestic producers or workers who support the petition account for: (1) At least 25 percent of the total production of the domestic like product; and (2) more than 50 percent of the production of the domestic like product produced by that portion of the industry expressing support for, or opposition to, the petition. Finally, section 732(c)(4)(D) of the Act provides that if the petition does not establish support of domestic producers or workers accounting for more than 50 percent of the total production of the domestic like product, the administering agency shall: (i) Poll the industry or rely on other information in order to determine if there is support for the petition as required by subparagraph (A), or (ii) determine industry support using a statistically valid sampling method.

In this case, the Department has determined that the petition (and subsequent amendments) contain adequate evidence of industry support; therefore, polling is unnecessary. *See* Attachment I to *AD Investigation Initiation Checklist: Carbon and Certain Alloy Steel Wire Rod From Brazil, Canada, Egypt, Germany, Indonesia, Mexico, Moldova, South Africa, Trinidad and Tobago, Ukraine, and Venezuela* (September 24, 2001) (*Initiation Checklist*). To estimate total domestic production of steel wire rod, the petitioners relied on data compiled by the ITC,[2] adjusted upward by five percent to include an estimate of production of products excluded from Presidential Proclamation 7273. In a letter dated September 7, 2001, the petitioners provided support for the five percent adjustment in the form of an affidavit from an industry representative familiar with the excluded products.

On September 14, 2001, the Department received comments regarding industry support from Ispat-Sidbec Inc., a Canadian producer of steel wire rod. The petitioners responded to these comments in a letter to the Department dated September 18, 2001. Further, on September 21, 2001, the petitioners submitted a letter adding the support of Nucor Corp., a domestic producer of steel wire rod, for the petitions.

The Department has reviewed the comments of Ispat-Sidbec Inc., and the petitioners. In order to estimate production for the domestic industry as defined for purposes of this case, the Department has relied upon not only the petition and amendments thereto, but also upon ''other information'' it obtained through research and described in Attachment 1 of the *Initiation Checklist.* Based on information from these sources, the Department determined, pursuant to section 732(c)(4)(D), that there is support for the petition as required by subparagraph (A). Specifically, the Department made the following determinations. For Brazil, Canada, Egypt, Germany, Indonesia, Mexico, Moldova, South Africa, Trinidad and Tobago, Ukraine, and Venezuela, the petitioners established industry support representing over 50 percent of total production of the domestic like product. Therefore, the domestic producers or workers who support the petition account for at least 25 percent of the total production of the domestic like product, and the requirements of section 732(c)(4)(A)(i) are met. Furthermore, because the Department received no opposition to the petition, the domestic producers or workers who support the petition account for more than 50 percent of the production of the domestic like product produced by that portion of the industry expressing support for or opposition to the petition. Thus, the requirements of section 732(c)(4)(A)(ii) are also met. Accordingly, the Department determines that the petitions were filed on behalf of the domestic industry within the meaning of section 732(b)(1) of the Act. *See* the *Initiation Checklist.*

Export Price and Normal Value

The following are descriptions of the allegations of sales at less than fair value upon which the Department has based its decision to initiate these investigations. The sources of data for the deductions and adjustments relating to home market price, U.S. price, constructed value (CV) and factors of production (FOP) are detailed in the *Initiation Checklist*. Where the petitioners obtained data from foreign market research, we contacted the researchers to establish their credentials and to confirm the validity of the information being provided. *See e.g., Memorandum to the File from Mike Strollo: Contacts with Source of Market Research for Antidumping Petition Regarding Imports of CASWR from Egypt* (September 24, 2001) (*Market Research for Egypt*). Should the need arise to use any of this information as facts available under section 776 of the Act in our preliminary or final determinations, we may re-examine the information and revise the margin calculations, if appropriate.

The margins calculated using these methodologies are as follows: Brazil, 53.97 to 94.73 percent; Canada, 3.72 to 15.91 percent; Egypt, 14.95 to 59.64 percent; Germany, 37.79 to 99.32 percent; Indonesia, 72.96 to 122.57 percent; Mexico, 29.63 to 40.52 percent; Moldova, 172.89 percent; South Africa, 13.32 percent; Trinidad and Tobago, 60.12 to 87.27 percent; Ukraine 101.92 percent; Venezuela, 12.68 to 21.02 percent.

Because the Department considers the country-wide import statistics for the anticipated period of investigation (POI) and price quotes based on market research used to calculate the estimated margins for the subject countries to be sufficient for purposes of initiation, we are initiating these investigations on these bases, as discussed below and in the *Initiation Checklist.*

Period of Investigation

The anticipated POI for the market economy countries is July 1, 2000, through June 30, 2001, while the anticipated POI for Moldova and Ukraine, the non-market economy (NME) countries, is January 1, 2001, through June 30, 2001.

Non-Market Economies

Regarding an investigation involving an NME, the Department presumes, based on the extent of central government control in an NME, that a single dumping margin, should there be one, is appropriate for all NME exporters in the given country. *See, Notice of Final Determination of Sales at Less Than Fair Value: Steel Concrete Reinforcing Bars from Moldova (Rebar from Moldova)*, 66 FR 33525 (June 22, 2001) and *Notice of Final Determination of Sales at Less Than Fair Value: Solid Agricultural Ammonium Nitrate from Ukraine (Nitrate from Ukraine)*, 66 FR 38632 (July 25, 2001). In the course of

[2] *Certain Steel Wire Rod,* Inv. No. TA–204–06, Final Staff Report dated August 2, 2001, Table II–2 at II–4.

these investigations, all parties will have the opportunity to provide relevant information related to the issues of Moldova's and Ukraine's NME status and the granting of separate rates to individual exporters.

Brazil

Export Price

The petitioners based export price (EP) on price quotes from Brazilian producers to an unaffiliated U.S. purchaser for different grades and sizes of subject merchandise and calculated a net U.S. price by deducting international freight, customs fees, and U.S. credit expenses.

Normal Value

With respect to normal value (NV), the petitioners provided home market prices that were obtained from foreign market research for grades and sizes of steel wire rod comparable to the products exported to the United States which serve as the basis for EP. The petitioners state that the home market price quotation was FOB plant and they only made an adjustment for home market credit expenses.

The petitioners have provided information demonstrating reasonable grounds to believe or suspect that sales of steel wire rod in the home market were made at prices below the fully absorbed cost of production (COP), within the meaning of section 773(b) of the Act, and requested that the Department conduct a country-wide sales-below-cost investigation.

The August 31, 2001, petitions included factors to adjust labor costs. These factors were based on the differences in labor costs between the U.S. and the country in question, reflecting data that are recent and contemporaneous, but for periods prior to 2000 (including U.S. data from IA's website). In subsequent filings, petitioners calculated revised factors in an effort to account for inflation through 2000. We have used the factors from the August 31, 2001 petitions. The petitions also included factors used to adjust natural gas and electricity costs. These factors were based on differences in costs between the United States and the country in question, reflecting recent, but pre-2000, annual data. In subsequent filings, petitioners calculated revised factors through use of consumer price indexes applied to the pre-2000 costs. Because these indexes are not specific to the factors in question, and do not account for other relevant variables (*e.g.*, changes in exchange rates), we have used the factors as presented in the August 31, 2001 petitions.

Pursuant to section 773(b)(3) of the Act, COP consists of the cost of manufacturing (COM); selling, general, and administrative expenses (SG&A); and packing expenses. The petitioners calculated COM based on their own production experience, adjusted for known differences between costs incurred to produce steel wire rod in the United States and in Brazil. To calculate SG&A and financial expenses, petitioners relied upon amounts reported in the 2000 consolidated income statements of Gerdau S.A. and Companhia Siderurgica Belgo Minieras, two Brazilian CASWR producers. Based upon a comparison of the prices of the foreign like product in the home market to the calculated COP of the product, we find reasonable grounds to believe or suspect that sales of the foreign like product were made below the COP, within the meaning of section 773(b)(2)(A)(i) of the Act. Accordingly, the Department is initiating a country-wide cost investigation.

The estimated dumping margin for Brazil based on a comparison between EP and home market price is in the range of 53.97 to 92.53 percent. Based upon the comparison of EP to CV, we calculated an estimated dumping margin in the range of 59.29 to 94.73 percent for Brazil.

Canada

Export Price

The petitioners based EP on price quotes from a Canadian producer to an unaffiliated U.S. purchaser for different grades and sizes of subject merchandise and calculated a net U.S. price by deducting international freight, customs fees, and U.S. credit expenses.

Normal Value

With respect to NV, the petitioners provided home market prices that were obtained from foreign market research for grades and sizes of steel wire rod comparable to the products exported to the United States which serve as the basis for EP. The petitioners state that the home market price quotation was FOB plant and they only made an adjustment for home market credit expenses.

The petitioners have provided information demonstrating reasonable grounds to believe or suspect that sales of steel wire rod in the home market were made at prices below the fully absorbed cost of production, within the meaning of section 773(b) of the Act, and requested that the Department conduct a country-wide sales-below-cost investigation.

The August 31, 2001 petitions included factors used to adjust natural gas and electricity costs. These factors were based on differences in costs between the United States and the country in question, reflecting recent, but pre-2000, annual data. In subsequent filings, petitioners calculated revised factors through use of consumer price indexes applied to the pre-2000 costs. Because these indexes are not specific to the factors in question, and do not account for other relevant variables (*e.g.*, changes in exchange rates), we have used the factors as presented in the August 31, 2001 petitions. As the factors for labor rates have not changed from the August 31, 2001 petition, we have not needed to adjust labor rates.

Pursuant to section 773(b)(3) of the Act, COP consists of COM, SG&A, and packing expenses. The petitioners calculated COM based on their own production experience, adjusted for known differences between costs incurred to produce steel wire rod in the United States and in Canada. To calculate SG&A and financial expenses, petitioners relied upon amounts reported in the 2000 consolidated income statements of Sidbec-Dosco (Ispat) Inc., a Canadian CASWR producer. Based upon a comparison of the prices of the foreign like product in the home market to the calculated COP of the product, we find reasonable grounds to believe or suspect that sales of the foreign like product were made below the COP, within the meaning of section 773(b)(2)(A)(i) of the Act. Accordingly, the Department is initiating a country-wide cost investigation.

The estimated dumping margins for Canada based on a comparison between EP and home market price range from 3.72 to 15.91 percent. Based upon the comparison of EP to CV, we calculated an estimated dumping margin of 9.45 percent.

Egypt

Export Price

To calculate export price (EP), petitioners obtained a price quote for CASWR produced in Egypt by Alexandria National Iron & Steel Company (Alexandria) for sale to the United States. The price quote obtained was in U.S. dollars per hundred-weight ($/CWT). The terms of sale for the price quotation obtained by petitioners were ex-works.

Normal Value

To calculate NV, petitioners obtained a price quote for CASWR produced by Alexandria with similar specifications as the U.S. quote. The price quote is on an ex-works basis and therefore does not include transportation charges. The petitioners adjusted this price by subtracting home market credit expenses and adding U.S. credit expenses. Petitioners calculated credit expense using the number of days payment was outstanding based on the payment terms, and the most recently available monthly interest rate reported in the June 2001 edition of the *International Financial Statistics* as published by the International Monetary Fund.

Although the petitioners provided information on home market prices, they also provided information demonstrating reasonable grounds to believe or suspect that sales of carbon and certain alloy steel wire rod in the home market were made at prices below the fully absorbed COP, within the meaning of section 773(b) of the Act, and requested that the Department conduct a country-wide sales-below-cost investigation.

Pursuant to section 773(b)(3) of the Act, COP refers to the total cost of producing the foreign like product which includes the COM, SG&A, interest expense, and packing expenses. Because the Egyptian producer's costs are unavailable, petitioners obtained the factors usage by a U.S. surrogate for producing a net ton of grade 1006, 5.5 millimeter in diameter, Industrial Quality CASWR during the POI, adjusted for known differences between the U.S. and Egyptian markets. The adjustment for labor costs was based on International Labor Organization statistics for 1999. The August 31, 2001 petitions included factors to adjust labor costs. These factors were based on the differences in labor costs between the U.S. and the country in question, reflecting data that are recent and contemporaneous, but for periods prior to 2000 (including U.S. data from IA's website). In subsequent filings, petitioners calculated revised factors in an effort to account for inflation through 2000. We have used the factors from the August 31, 2001 petitions. The adjustment for energy costs was based on International Energy Agency statistics. The August 31, 2001 petitions included factors used to adjust natural gas and electricity costs. These factors were based on differences in costs between the United States and the country in question, reflecting recent, but pre-2000, annual data. In subsequent filings, petitioners calculated revised factors through use of consumer price indexes applied to the pre-2000 costs. Because these indexes are not specific to the factors in question, and do not account for other relevant variables (*e.g.*, changes in exchange rates), we have used the factors as presented in the August 31, 2001 petitions. To calculate SG&A and interest expenses, petitioners relied upon the most recent year-end financial statements of Alexandria (December 31, 1998). The SG&A and interest expense ratios were calculated by dividing total SG&A and net financial expenses (interest expense less short-term interest income) by the cost of goods sold reported in Alexandria's income statement. Based upon the comparison of the prices of the foreign like product in the home market to the calculated COP of the product, we find reasonable grounds to believe or suspect that sales of the foreign like product were made at prices below the COP, within the meaning of section 773(b)(2)(A)(i) of the Act. Accordingly, the Department is initiating a country-wide cost investigation.

Given the evidence of below-cost sales, petitioners also based NV on CV pursuant to sections 773(a)(4), 773(b) and 773(e) of the Act. The petitioners calculated CV using the same COM and SG&A used to compute Egyptian home market costs. Consistent with section 773(e)(2) of the Act, petitioners included in CV an amount for profit. The petitioners calculated a profit ratio based on the 1998 income statements for Alexandria.

The estimated dumping margin for Egypt based on a comparison between EP and home market price is 14.95 percent. Based upon the comparison of EP to CV, we calculated an estimated dumping margin of 59.64 percent.

Germany

Export Price

Petitioners obtained a price quote for CASWR from a German producer offered through a reseller to a U.S. customer. The terms of sale were FOB. The price quote was obtained in U.S. dollars per CWT. The U.S. net price was calculated by taking the price from the quote from the German producer of CASWR and subtracting the following: international freight and insurance, U.S. import duty, U.S. merchandise processing fees, U.S. harbor maintenance fees, and U.S. inland freight. Petitioners made adjustments for imputed U.S. credit expenses and commissions.

Normal Value

From a market researcher petitioners obtained home market prices based upon a price quote for CASWR within the scope from a German manufacturer of CASWR to an unaffiliated purchaser. The terms of sale were delivered to customer and payment terms were 60 days. The quoted price was given in Deutschmarks per metric ton. Petitioners deducted freight costs and home market credit expenses. Freight costs were as stated in the given quote. Home market credit expenses were based on published IMF statistics for short-term lending in Germany during the specified month within the POI during which petitioners obtained the price quote. Petitioners also added an amount for estimated commission on the U.S. quote and for imputed U.S. credit expenses. U.S. credit expenses were based on published IMF statistics for short-term lending in Germany during the month in which petitioners obtained the quote.

Petitioners state that they have reason to believe that CASWR is sold in Germany at prices less than COP. To determine COM, petitioners used a U.S. producer's cost of producing CASWR as a surrogate, adjusted for known differences between the U.S. and German markets. The adjustment for labor costs was based on International Labor Organization statistics for 1999. The August 31, 2001 petitions included factors to adjust labor costs. These factors were based on the differences in labor costs between the U.S. and the country in question, reflecting data that are recent and contemporaneous, but for periods prior to 2000 (including U.S. data from IA's website). In subsequent filings, petitioners calculated revised factors in an effort to account for inflation through 2000. We have used the factors from the August 31, 2001 petitions. The adjustment for energy costs was based on International Energy Agency statistics. The August 31, 2001 petitions included factors used to adjust natural gas and electricity costs. These factors were based on differences in costs between the United States and the country in question, reflecting recent, but pre-2000, annual data. In subsequent filings, petitioners calculated revised factors through use of consumer price indexes applied to the pre-2000 costs. Because these indexes are not specific to the factors in question, and do not account for other relevant variables (*e.g.*, changes in exchange rates), we have used the factors as presented in the August 31, 2001 petitions. No adjustment was made for raw material costs, believed to be

comparable between Germany and the U.S. because of the worldwide commodity nature of the raw materials. U.S. producers' overhead costs were used to establish the German COM, SG&A, and interest expense ratios were based on the consolidated income statement of a surrogate German CASWR producer which petitioners believe to be representative of CASWR producers in Germany. The total SG&A expenses and the net financial expenses were divided by the cost of goods sold in order to derive these ratios. Petitioners' comparisons of net home market prices to their calculated COP did not deduct inland freight expenses from the home market gross price; the Department did so. For CV, a profit ratio was derived from the surrogate German CASWR producer's 2000 income statement, which was applied to the COP to determine CV. A circumstance-of-sale adjustment was made to CV for credit expenses.

For Germany, petitioners converted the cost of production and the constructed value, both calculated in U.S. dollars, to marks. For the cost test, petitioners compared the resulting cost of production in marks to the home market price in marks; for the constructed value-based margin calculation, petitioners then converted the constructed value in marks back to U.S. dollars, and compared it to U.S. price. We instead used the original cost of production and constructed value in U.S. dollars, and for the cost test converted the home market price into U.S. dollars. Based upon the comparison of the adjusted prices of foreign like product in the home market to the calculated COP of the product, we find reasonable grounds to believe or suspect that sales of the foreign like product were made below the COP within the meaning of section 773(b)(2)(A)(I) of the Act. Accordingly, the Department is initiating a country-wide cost investigation.

The price-to-price comparison produced an estimated dumping margin of 37.79 percent. The price-to-CV comparison produced a dumping margin of 99.32 percent.

Indonesia

Export Price

Petitioners provided a price quote for CASWR from a wire rod producer in Indonesia. The price quote reflects the price for new orders and the price that the U.S. customer currently pays for deliveries. The export price is the price quote, minus ocean freight and insurance, minus import duties, minus import charges, and minus U.S. inland freight. Petitioners based U.S. inland freight on the experience of U.S. purchaser of domestic and imported steel wire rod.

Normal Value

Petitioners obtained a price quote for CASWR offered during the POI by an Indonesian producer to an unaffiliated home market customer for wire rod. The price quote sale terms are FOB mill. Petitioners added U.S. imputed credit expenses to normal value to account for differences in imputed credit expenses. Petitioners subtracted ocean freight and insurance, duties, import charges, U.S. inland freight, and commissions to calculate normal value.

Petitioners stated that they have reason to believe that CASWR is sold in Indonesia at prices less than COP. To determine cost of manufacturing, petitioners used a U.S. producer's cost of manufacturing CASWR as a surrogate, adjusted for known differences between the U.S. and Indonesian markets. Production cost data are for the period beginning July 1, 2000 through March 31, 2001. Petitioners state that the quantity of input materials, the cost of raw materials and alloys, and the quantities and values of labor, natural gas, and electricity are based on petitioners' experience. Petitioners stated that they calculated alloy costs by taking the period costs for alloys, divided by the tons rolled. The figure was adjusted to account for the 1006 and 1008 carbon grade costs used in the constructed value calculation. To calculate the scrap offset, petitioners divided the total scrap credit (for all carbon and certain alloy steel wire rod) by the total tons rolled (for all CASWR).

Petitioners calculated a factor to adjust for known cost differences between the Indonesian and the U.S. markets for energy using statistics from the International Energy Agency. The August 31, 2001 petitions included these factors used to adjust natural gas and electricity costs. These factors were based on differences in costs between the United States and the country in question, reflecting recent, but pre-2000, annual data. In subsequent filings, petitioners calculated revised factors through use of consumer price indexes applied to the pre-2000 costs. Because these indexes are not specific to the factors in question, and do not account for other relevant variables (*e.g.*, changes in exchange rates), we have used the factors as presented in the August 31, 2001 petitions. Petitioners calculated factors to adjust for known cost differences between the Indonesian and the U.S. markets for labor based on data from the International Labor Organization and the World Bank. The August 31, 2001 petitions included factors to adjust labor costs. These factors were based on the differences in labor costs between the U.S. and the country in question, reflecting data that are recent and contemporaneous, but for periods prior to 2000 (including U.S. data from IA's website). In subsequent filings, petitioners calculated revised factors in an effort to account for inflation through 2000. We have used the factors from the August 31, 2001 petitions. Petitioners applied the factory overhead ratios, based on petitioners' experience to the total cost of manufacturing, labor and energy. Petitioners calculated SG&A expenses, interest expenses, and profit using PT Jakarta Kyoei Steel Works Limited (PT Jakarta) 1999 financial statements. Petitioners noted that 2000 financial statements for PT Jakarta are not available, and that 2000 financial statements for other Indonesian producers with sufficient detail for financial expenses are also not publicly available. The Department re-calculated the SG&A ratio and the interest expenses ratio with PT Jakarta's cost of goods sold rather than the total cost of manufacturing calculated by petitioners. Based upon the comparison of the adjusted prices of foreign like product in the home market to the calculated COP of the product, we find reasonable grounds to believe or suspect that sales of the foreign like product were made below the COP within the meaning of section 773(b)(2)(A)(I) of the Act. Accordingly, the Department is initiating a country-wide cost investigation.

The estimated dumping margins for Indonesia based on a comparison between EP and home market price (NV) is 72.96 percent. Based on the comparison of EP to CV, the petitioners calculated the estimated dumping margin to be 122.57 percent.

Mexico

Export Price/Constructed Export Price

The petitioners based EP on affidavits of U.S. price offerings for carbon and certain steel wire rod manufactured by Siderurgica Lazaro Cardenas Las Truchas SA (Sicartsa) from July 1, 2000 to March 31, 2001. In the absence of more definitive information, petitioners refer to the date of the offer as the date of sale. The affidavits with the sales price offers reflect the price offered to an unaffiliated customer prior to the date of importation.

The petitioners calculated a net U.S. price by subtracting estimated costs for international freight and insurance, U.S.

import duty, U.S. merchandise processing and harbor maintenance fees, and where applicable, U.S. inland freight from the port to the first unaffiliated U.S. customer, from the sales price.

Normal Value

Petitioners based NV on CV, alleging pursuant to section 773(b) of the Act that sales in the home market were made at prices below the fully absorbed COP, and requested that the Department conduct a country-wide sales-below-cost investigation.

The petitioners provided information that demonstrated reasonable grounds to believe or suspect that sales of carbon and steel wire rod products in the home market were made at prices below the fully absorbed COP. COP in the antidumping law refers to the total cost of producing the foreign like product. Pursuant to section 773(b)(3) of the Act, it includes the COM, SG&A expenses and packing expenses.

The petitioners calculated COM based on their own production experience, adjusted for known differences between costs incurred to produce carbon and steel wire rod in the United States and in Mexico using market research and publicly available data. The adjustment for labor costs was based on International Labor Organization statistics for 1998. To calculate SG&A and financial expenses, petitioners relied upon Altos Hornos De Mexico S.A.'s (AHMSA's) consolidated income statement for the period ending December 31, 1999. Based upon the comparison of the adjusted prices of the foreign like product in the home market to the calculated COP of the product, we find reasonable grounds to believe or suspect that sales of the foreign like product were made below the COP within the meaning of section 773(b)(2)(A)(I) of the Act. Accordingly, the Department is initiating a country-wide cost investigation.

In light of their allegations that home market prices were below cost, petitioners based NV on CV. The COP portion of CV was calculated based on U.S. producer's cost of producing carbon and steel wire rod, adjusted for known differences between the Mexican and U.S. markets. The profit ratio was based on the income statement from AHMSA for 1997, the most recent year in which AHMSA earned a profit.

The August 31, 2001 petitions included factors used to adjust labor, natural gas and electricity costs. These factors were based on differences in costs between the United States and the country in question, reflecting recent, but pre-2000, annual data. In subsequent filings, petitioners calculated revised factors through use of consumer price indexes applied to the pre-2000 costs. Because these indexes are not specific to the factors in question, and do not account for other relevant variables (*e.g.*, changes in exchange rates), we have used the factors as presented in the August 31, 2001 petitions.

The estimated dumping margins for Mexico based on comparisons between EP and home market prices are 29.63 percent and 31.95 percent. Based upon the comparison of EP to CV, we calculated estimated dumping margins of 38.04 percent and 40.52 percent.

Moldova

Export Price

Petitioners identified Moldova Steel Works (MSW) as the only known Moldovan producer/exporter of subject merchandise to the United States. To calculate EP, petitioners obtained a price quote for grade 1008, 5.5 millimeters in diameter, industrial quality CASWR produced in Moldova by MSW for sale to the United States. The price quote obtained was in U.S. dollars per hundred-weight ($/CWT). The terms of sale were delivered to U.S. customer. As such, the price includes foreign inland freight, ocean freight and insurance, foreign brokerage and handling, U.S. import duties and fees, and U.S. inland freight.

Petitioners calculated ocean freight and insurance based on the average import charges for subject merchandise entered during the POI. Petitioners used import values declared to Customs (IM–145 data) to determine these import charges. Foreign brokerage and handling costs were calculated using publicly available information previously used by the Department in *Steel Concrete Reinforcing Bars from Moldova: Final Determination of Sales at Less Than Fair Value (Rebar from Moldova)*, 66 FR 33525 (June 22, 2001). U.S. import duties are based on the general rate of duty on merchandise imported into the United States during the POI as described in the Harmonized Tariff Schedule of the United States (2001). U.S. import fees (*i.e.*, harbor maintenance and merchandise processing fees) are based on the U.S. Customs Service Regulations as codified under 19 C.F.R. 24.24(b)(1). U.S. inland freight costs are based on petitioners' experience in the industry. Although the price quote is on a delivered basis and includes foreign port fees and transportation charges within Moldova, no amount for inland freight was deducted in calculating EP because petitioners have no information regarding these charges. However, according to petitioners, since the omission of these costs increases export price and correspondingly reduces any dumping margin, this margin, therefore, is a conservative estimate.

Normal Value

With respect to NV, petitioners asserted that Moldova is an NME country. In previous investigations, the Department determined that Moldova is an NME country. *See Rebar from Moldova*. Pursuant to section 771(18)(C)(i) of the Act, the Department's determination of NME status remains in effect until a contrary determination is made. The presumption of NME status for the PRC has not been revoked by the Department and, therefore, remains in effect for purposes of the initiation of this investigation. Petitioners, therefore, provided factors of production for constructed value (CV) pursuant to section 773(c) of the Act.

For NV, the petitioners based the factors of production, as defined by section 773(c)(3) of the Act, on the consumption rates of one U.S. CASWR producer. The petitioners asserted that information regarding Moldovan producers' consumption rates was not available, and that the U.S. producer employs a production process which is similar to the production process employed by the Moldovan producer of CASWR in Moldova. Thus, the petitioners have assumed, for purposes of the petition, that the producer in Moldova uses the same inputs in the same quantities as the U.S. producer in question. Based on the information provided by petitioners, we believe that the petitioners' factors of production methodology represents information reasonably available to the petitioners and is appropriate for purposes of initiating this investigation.

The petitioners asserted that India was the most appropriate surrogate country for Moldova, claiming that India is: (1) A market economy; (2) a significant producer of comparable merchandise; and (3) at a level of economic development comparable to the PRC in terms of per capita GNP. Based on the information provided by the petitioners, we believe that the petitioners' use of India as a surrogate country is appropriate for purposes of initiating this investigation.

In accordance with section 773(c)(4) of the Act, the petitioners valued factors of production, where possible, on reasonably available, public surrogate data from India. Materials, with the exception of natural gas and alloys, and

fluxes, were valued based on Indian import values, as published in the *1998 and 1999 Monthly Statistics of Foreign Trade of India,* and inflated based on the Indian Wholesale Price Index. Petitioners valued natural gas based on the value calculated in the *Notice of Final Determination of Sales at Less Than Fair Value; Polyvinyl Alcohol from the People's Republic of China,* 61 FR 14057 (March 29, 1996). Additionally, petitioners submitted a U.S. price for alloys, additives and fluxes raw material inputs. On September 7, 2001, petitioners stated that these inputs were world commodities and the prices don't vary from country to country. On September 21, 2001, petitioners submitted consumption ratios for alloys, additives, and fluxes, but failed to provide surrogate values for these inputs. Since the petitioners did not submit additional surrogate prices to value alloys, additives, and fluxes in accordance with section 351.408 of the Department's regulations, the Department rejected the U.S. prices used by petitioners. Instead, the Department valued alloys, additives and fluxes using imports of limestone into India during 1998 obtained from the United Nations Commodity Trade Statistics as a surrogate value. The Department notes that this methodology was used in the recent hot-rolled steel investigation from the People's Republic of China. *See Factors Valuation Memo: Preliminary Determination of Sales at Less Than Fair Value: Certain Hot-Rolled Carbon Steel Flat Products from China,* dated April 23, 2001. Labor was valued using the regression-based wage rate for the PRC provided by the Department, in accordance with 19 CFR 351.408(c)(3). Electricity was valued using *Energy Prices and Taxes, First Quarter 2001,* published by the Organization for Economic Cooperation and Development (OECD) International Energy Agency.

For overhead, depreciation, SG&A expenses, and profit, the petitioners applied rates derived from the financial statements of TATA, an Indian steel producer. The petitioners calculated the factory overhead, depreciation, and SG&A expense ratios based on TATA's 1999–2000 consolidated income statement. Petitioners calculated a profit ratio based on TATA's earnings before interest and taxes also from its 1999–2000 income statement. Petitioners did not add a value for packing because they were unable to obtain information on such materials.

Based on the information provided by the petitioners, we believe that the surrogate values represent information reasonably available to the petitioners and are acceptable for purposes of initiating this investigation. Therefore, based upon comparisons of EP to CV, we calculated an estimated dumping margin of 172.89 percent.

South Africa

Export Price

The petitioners based EP on an affidavit of U.S. price offerings for products manufactured by Iscor during January through March 2001. The petitioners selected a steel wire rod product with specifications commonly exported to the United States. In the absence of more definitive information, petitioners refer to the date of the offer as the date of sale. The affidavit with the sales price offer reflects the price offered to an unaffiliated customer.

The petitioners calculated a net U.S. price by subtracting estimated costs for international freight (from the U.S. Census Bureau), harbor maintenance, and merchandise processing fees (from *International Financial Statistics*).

Normal Value

The petitioners based NV on domestic prices of steel wire rod in effect during a month within the period for which the U.S. offer was in effect. The petitioners used prices for a recent offer for sale by Iscor to unaffiliated customers in South Africa as the starting point in calculating NV. The petitioners adjusted this price by subtracting home market movement charges and home market credit expenses and adding U.S. credit expenses. Domestic prices were based on findings contained in the market research report. Credit expenses were calculated based on both findings contained in the market research report as well as short-term lending rates contained in *International Financial Statistics.*

In addition, the petitioners alleged pursuant to section 773(b) of Act that sales in the home market were made at prices below the fully absorbed COP, and requested that the Department conduct a country-wide sales-below-cost investigation. Therefore, pursuant to sections 773(a)(4) and 773(e) of the Act the petitioners calculated a normal value for sales in South Africa based on CV. The petitioners calculated CV for South African producers based on petitioner's own production experience, adjusted for known differences between costs incurred to produce steel wire rod in the United States and in South Africa.

The petitioners calculated COM based on their own production experience, adjusted for known differences between costs incurred to produce steel wire rod in the United States and in South Africa using market research and publicly available data. The adjustment for labor costs was based on IMF statistics for 1999. The August 31, 2001 petitions included factors to adjust labor costs. These factors were based on the differences in labor costs between the U.S. and the country in question, reflecting data that are recent and contemporaneous, but for periods prior to 2000 (including U.S. data from IA's website). In subsequent filings, petitioners calculated revised factors in an effort to account for inflation through 2000. We have used the factors from the August 31, 2001 petitions. The adjustment for energy costs was based on International Energy Agency statistics. The August 31, 2001 petitions included factors used to adjust natural gas and electricity costs. These factors were based on differences in costs between the United States and the countries in question, reflecting recent, but pre-2000, annual data. In subsequent filings, petitioners calculated revised factors through use of consumer price indexes applied to the pre-2000 costs. Because these indexes are not specific to the factors in question, and do not account for other relevant variables (*e.g.*, changes in exchange rates), we have used the factors as presented in the August 31, 2001 petitions. The petitioners based depreciation and other factory overhead on the actual experience of one U.S. CASWR producer. To calculate SG&A and financial expenses, petitioners relied upon the fiscal year 2000 audited financial statements of South African producer, Iscor Ltd. Based upon the comparison of the adjusted prices of the foreign like product in the home market to the calculated COP of the product, as revised by the Department, we do not find reasonable grounds to believe or suspect that sales of the foreign like product were made below the COP within the meaning of section 773(b)(2)(A)(I) of the Act. Accordingly, the Department is not initiating a country-wide cost investigation.

The estimated dumping margin for South Africa based on a comparison between EP and home market price is 13.32 percent.

Trinidad and Tobago

Export Price

The petitioners determined EP based on an offer for sale from the producer in Trinidad and Tobago, Caribbean Ispat, to an unaffiliated U.S. purchaser for one grade with a range of sizes. The sales information was obtained from

industry sources in the United States and supported by an affidavit in the petitioner's supplemental submission of September 6, 2001. The petitioners calculated a net U.S. price by deducting ocean freight charges from the Trinidad and Tobago mill to the U.S. port, U.S. duties, U.S. port charges and U.S. inland freight charges from the port to the first unaffiliated U.S. customer.

Normal Value

With respect to NV, the petitioners provided a home market price that was obtained from foreign market research, applicable to two grades and range of sizes of CASWR which are comparable to the product exported to the United States and serves as the basis for EP. The petitioners state that the home market price quotation was FOB mill and therefore no freight adjustments were made. Petitioners stated that they did not impute credit expenses from the reported home market price because the terms of sale for the home market sales used were for advance cash payment. Therefore, in their calculation of normal value, petitioners adjusted for differences in imputed credit expenses by simply adding the U.S. credit expense. The petitioners stated that no adjustments were made for differences in packing costs.

In addition, the petitioners provided information demonstrating reasonable grounds to believe or suspect that sales of CASWR in the home market were made at prices below the fully absorbed COP, within the meaning of section 773(b) of the Act, and requested that the Department conduct a country-wide sales-below-cost investigation.

Pursuant to section 773(b)(3) of the Act, COP consists of the COM, SG&A expenses, and packing. The petitioners calculated COM based on the average consumption rates of one U.S. CASWR producer. The petitioners adjusted COM for known differences in the production process used in the United States and Trinidad and Tobago. The adjustment for labor costs was based on International Labor Organization statistics for 1999. The August 31, 2001 petitions included factors to adjust labor costs. These factors were based on the differences in labor costs between the U.S. and the country in question, reflecting data that are recent and contemporaneous, but for periods prior to 2000 (including U.S. data from IA's website). In subsequent filings, petitioners calculated revised factors in an effort to account for inflation through 2000. We have used the factors from the August 31, 2001 petitions. The adjustment for energy costs was based on International Energy Agency statistics. The August 31, 2001 petitions included factors used to adjust natural gas and electricity costs. These factors were based on differences in costs between the United States and the country in question, reflecting recent, but pre-2000, annual data. In subsequent filings, petitioners calculated revised factors through use of consumer price indexes applied to the pre-2000 costs. Because these indexes are not specific to the factors in question, and do not account for other relevant variables (*e.g.,* changes in exchange rates), we have used the factors as presented in the August 31, 2001 petitions. The petitioners based depreciation and other factory overhead on the actual experience of one U.S. CASWR producer. The petitioners derived SG&A from a discussion of Ispat Caribbean's operating income ratio in the notes of the annual report of its parent company, Ispat International. The petitioners relied on the consolidated interest expense for all of Ispat International's operating segments, as reported in the consolidated income statement, to calculate the net financial expense of the Trinidad and Tobago producer. Based upon the comparison of the adjusted prices of the foreign like product in the home market to the calculated COP of the product, we find reasonable grounds to believe or suspect that sales of the foreign like product were made below the COP, within the meaning of section 773(b)(2)(A)(i) of the Act. Accordingly, the Department is initiating a country-wide cost investigation.

Pursuant to sections 773(a)(4), 773(b) and 773(e) of the Act, the petitioners also based NV for sales in Trinidad and Tobago on CV. The petitioners calculated CV using the same COM, SG&A, financial expense figures and overhead used to compute Trinidad and Tobago home market costs. Consistent with section 773(e)(2) of the Act, the petitioners included in CV, an amount for profit. The profit was based on the consolidated net income before taxes for all of Ispat International's operating segments taken from Ispat International's consolidated income statement.

The estimated dumping margin for Trinidad and Tobago based on a comparison between EP and home market price is 60.12 percent. Based upon the comparison of EP to CV, we calculated an estimated dumping margin of 87.27 percent.

Ukraine

Export Price

To calculate EP, petitioners obtained U.S. pricing data from a Ukrainian wire rod producer. The price submitted was contemporaneous with the POI and was a price quote for Grade 1008 5.5 mm industrial quality steel wire rod. This price quote was an FOB price of merchandise.

Petitioners deducted estimated inland freight and brokerage and handling costs from the U.S. price to arrive at an estimated ex-factory price for use in the comparison of EP and normal values for Ukraine.

Normal Value

Petitioners assert that Ukraine is an NME and no determination to the contrary has yet been made by the Department. *See Notice of Final Determination of Sales at Less Than Fair Value: Solid Agricultural Ammonium Nitrate from Ukraine,* 66 FR 38632 (July 25, 2001). Ukraine will be treated as an NME unless and until its NME status is revoked. Pursuant to section 771(18)(C)(i) of the Act, because Ukraine's status as an NME remains in effect, the petitioners determined the dumping margin using an FOP analysis.

Petitioners based the FOP, as defined by section 773(c)(3) of the Act, on the consumption rates of one U.S. wire rod producer. The petitioners assert that information regarding the Ukrainian mills' consumption rates is not available. The U.S. producer uses an electric arc furnace mill (minimill), that produces CASWR of varying sizes, while the Ukrainian producer uses open-hearth furnaces to produce CASWR. *See Iron and Steel Works of the World* at 497. The use of electric furnaces is an efficient method of wire rod production and is generally less capital and labor intensive than the use of open-hearth furnaces. According to petitioners, the derivation of consumption rates from a minimill likely understates the normal value cost of production, and therefore provides a conservative estimate on the production costs in Ukraine.

The petitioners assert that Indonesia is the most appropriate surrogate country for Ukraine, claiming that Indonesia is: (1) a market economy; (2) a significant producer of comparable merchandise; and (3) at a level of economic development comparable to Ukraine in terms of per capita GNP. Based on the information provided by the petitioners, we believe that the petitioners' use of Indonesia as a surrogate country is appropriate for purposes of initiating this investigation.

For the major input, scrap steel, petitioners used a surrogate value from Indonesia published in the (UNCTS) (1998), which was also used by the Department in a recent anti-dumping duty investigation on line pipe from Romania. *See Factors Valuation Memo: Preliminary Determination of Sales at Less Than Fair Value, Certain Small Diameter Carbon and Alloy Seamless Standard, Line and Pressure Pipe from Romania,* dated January 28, 2000.

Petitioners assert that a certain amount of molten steel is lost during the melting and casting process in the production of wire rod. According to petitioners, minimills offset the yield loss by recovering the scrap and processing it into a usable form for internal use. Therefore, petitioners have offset the total scrap usage by deducting the recovered amount of scrap in the normal value calculation using the same surrogate value from UNCTS from 1998 for scrap steel.

Since the petitioners did not submit additional surrogate prices to value alloys, additives, and fluxes in accordance with section 351.408 of the Department's regulations, the Department rejected the U.S. price used by petitioners. Instead, the Department valued alloys, additives and fluxes using a limestone surrogate value from UNCTS (1998). The Department notes that this methodology was used in the recent hot-rolled steel investigation from the People's Republic of China. *See Factors Valuation Memo: Preliminary Determination of Sales at Less Than Fair Value: Certain Hot-Rolled Carbon Steel Flat Products from China,* dated April 23, 2001. Accordingly, we adjusted the price using the WPI from IFS. Accordingly, we adjusted the price using the appropriate inflator from IFS. *See Initiation Checklist* at Attachment I.

Electricity was valued using *Energy Prices and Taxes, First Quarter 2001,* published by the Organization for Economic Cooperation and Development (OECD) International Energy Agency. Petitioners valued natural gas using a surrogate value for industrial gas costs in Indonesia from the first quarter 2000 Gulf Indonesia Quarterly Report. For overhead, SG&A expenses and profit, the petitioners applied rates derived from the 1997 public annual reports of an Indonesian producer of subject merchandise, PT Krakatau Steel. These same financial ratios were used in the two recent antidumping investigations. *See Notice of Preliminary Determination of Sales at Less Than Fair Value: Certain Hot-Rolled Carbon Steel Flat Products from Ukraine*, 66 FR 22152 (May 3, 2001) *and Notice of Final Determination of Sales at Less Than Fair Value: Certain Small Diameter Carbon Alloy Seamless Standard, Line and Pressure Pipe from Romania,* 65 FR 39125 (June 23, 2000).

Based on the information provided by the petitioners, we believe that the surrogate values represent information reasonably available to the petitioners and are acceptable for purposes of initiating this investigation. Therefore, based upon comparisons of EP to CV, we calculated an estimated dumping margin for Ukraine of 101.92 percent.

Venezuela

Export Price

The petitioners based EP on an affidavit containing an offering price for products manufactured by CVG Siderurgica Del Orinoco C.A. (Sidor) during April through June of 2001. The petitioners selected a steel wire rod product with specifications commonly exported to the United States. *See* Petition Exhibit 3. In the absence of more definitive information, petitioners refer to the date of the offer as the date of sale. The affidavit with the sales price offer reflects the price offered to an unaffiliated customer. The petitioners deducted international freight and insurance, U.S. import duty and U.S. merchandise and processing fees to obtain a net U.S. price.

Normal Value

With respect to NV, the petitioners provided home market prices that were obtained from foreign market research for grades and sizes of steel wire rod comparable to the products exported to the United States which serve as the basis for EP. The petitioners state that the home market price quotation was FOB plant and they only made an adjustment for home market credit expenses.

The petitioners have provided information demonstrating reasonable grounds to believe or suspect that sales of steel wire rod steel in the home market were made at prices below the fully absorbed COP, within the meaning of section 773(b) of the Act, and requested that the Department conduct a country-wide sales-below-cost investigation.

The August 31, 2001, petitions included factors to adjust labor costs. These factors were based on the differences in labor costs between the U.S. and the country in question, reflecting data that are recent and contemporaneous, but for periods prior to 2000 (including U.S. data from IA's website). In subsequent filings, petitioners calculated revised factors in an effort to account for inflation through 2000. We have used the factors from the August 31, 2001 petitions. The petitions also included factors used to adjust natural gas and electricity costs. These factors were based on differences in costs between the United States and the country in question, reflecting recent, but pre-2000, annual data. In subsequent filings, petitioners calculated revised factors through use of consumer price indexes applied to the pre-2000 costs. Because these indexes are not specific to the factors in question, and do not account for other relevant variables (*e.g.*, changes in exchange rates), we have used the factors as presented in the August 31, 2001 petitions.

Pursuant to section 773(b)(3) of the Act, COP consists of COM, SG&A, and packing expenses. The petitioners calculated COM based on their own production experience, adjusted for known differences between costs incurred to produce steel wire rod in the United States and in Venezuela. To calculate SG&A and financial expenses, petitioners relied upon amounts reported in the 2000 consolidated income statement of Siderurgica Venezolana, a Venezuelan CASWR producer. Based upon a comparison of the prices of the foreign like product in the home market to the calculated COP of the product, we find reasonable grounds to believe or suspect that sales of the foreign like product were made below the COP, within the meaning of section 773(b)(2)(A)(i) of the Act. Accordingly, the Department is initiating a country-wide cost investigation.

The estimated dumping margin for Venezuela based on a comparison between EP and home market price is 12.68 percent. Based upon the comparison of EP to CV, we calculated estimated dumping margins between 19.37 percent and 21.02 percent.

Fair Value Comparisons

Based on the data provided by the petitioners, there is reason to believe that imports of carbon and certain alloy steel wire rod from Brazil, Canada, Egypt, Germany, Indonesia, Mexico, Moldova, South Africa, Trinidad and Tobago, Ukraine, and Venezuela are being, or are likely to be, sold at less than fair value.

Allegations and Evidence of Material Injury and Causation

The petitions allege that the U.S. industry producing the domestic like product is being materially injured, or is threatened with material injury, by reason of the individual and cumulated

imports of the subject merchandise sold at less than NV. The petitioners contend that the industry's injured condition is evident in the stagnation of U.S. producers' sales volumes and profits, the decline of their capacity utilization, the increase of U.S. inventories and closures of U.S. production facilities. The allegations of injury and causation are supported by relevant evidence including U.S. Customs import data, lost sales, and pricing information. We have assessed the allegations and supporting evidence regarding material injury and causation, and have determined that these allegations are properly supported by accurate and adequate evidence and meet the statutory requirements for initiation (*see Initiation Checklist,* Material Injury section). In accordance with section 771(7)(G)(ii)(III) of the Act, which provides an exception to the mandatory cumulation provision for imports from any country designated as a beneficiary country under the Caribbean Basin Economic Recovery Act, we have considered the petitioners' allegation of injury with respect to Trinidad and Tobago independent of the allegations for each of the remaining countries named in the petition and found that the information provided satisfies the requirements (*see Initiation Checklist,* Material Injury section).

Initiation of Antidumping Investigations

Based upon our examination of the petitions on carbon and certain alloy steel wire rod, and the petitioners' responses to our supplemental questionnaires clarifying the petitions, as well as our conversations with the foreign market researchers who provided information concerning various aspects of the petition, we have found that they meet the requirements of section 732 of the Act. *See Initiation Checklist.* Therefore, we are initiating antidumping duty investigations to determine whether imports of carbon and certain alloy steel wire rod from Brazil, Canada, Egypt, Germany, Indonesia, Mexico, Moldova, South Africa, Trinidad and Tobago, Ukraine, and Venezuela are being, or are likely to be, sold in the United States at less than fair value. Unless this deadline is postponed, we will make our preliminary determinations no later than 140 days after the date of this initiation.

Distribution of Copies of the Petitions

In accordance with section 732(b)(3)(A) of the Act, a copy of the public versions of the petition have been provided to the representatives of the governments of Brazil, Canada, Egypt, Germany, Indonesia, Mexico, Moldova, South Africa, Trinidad and Tobago, Ukraine, and Venezuela. We will attempt to provide a copy of the public version of the petition to each exporter named in the petition, as appropriate.

International Trade Commission Notification

We have notified the ITC of our initiations, as required by section 732(d) of the Act.

Preliminary Determinations by the ITC

The ITC will determine, no later than October 15, 2001, whether there is a reasonable indication that imports of carbon and certain alloy steel wire rod from Brazil, Canada, Egypt, Germany, Indonesia, Mexico, Moldova, South Africa, Trinidad and Tobago, Ukraine, and Venezuela are causing material injury, or threatening to cause material injury, to a U.S. industry. A negative ITC determination for any country will result in the investigation being terminated with respect to that country; otherwise, these investigations will proceed according to statutory and regulatory time limits.

This notice is issued and published pursuant to section 777(i) of the Act.

Dated: September 24, 2001.

Faryar Shirzad,

Assistant Secretary for Import Administration.

[FR Doc. 01–24621 Filed 10–1–01; 8:45 am]

BILLING CODE 3510–DS–P

DEPARTMENT OF COMMERCE

International Trade Administration

[A–428–825]

Stainless Steel Sheet and Strip in Coils From Germany; Final Results of Changed Circumstances Review

AGENCY: Import Administration, International Trade Administration, Department of Commerce.

ACTION: Notice of final results of changed circumstances review, and revocation, in part, of order of the antidumping duty order.

SUMMARY: On August 17, 2001, the Department of Commerce (the Department) published a notice of initiation and preliminary results of a changed circumstances review and notice of intent to revoke in part the antidumping duty order on stainless steel sheet and strip in coils from Germany. *See Stainless Steel Sheet and Strip in Coils From Germany; Initiation and Preliminary Results of Changed Circumstances Antidumping Duty Administrative Review,* 66 FR 43183 (August 17, 2001) (*Preliminary Results*). This notice concerned the specialty stainless steel strip product known as Semi Vac 90, described in the ''Scope of Changed Circumstances Review'' section, below. We gave interested parties an opportunity to comment on our preliminary results; no party submitted comments on these preliminary results. We are hereby revoking the order in part because domestic producers of the like product have expressed no interest in continuation of the order with respect to this particular stainless steel product.

EFFECTIVE DATE: October 2, 2001.

FOR FURTHER INFORMATION CONTACT: Robert M. James, Import Administration, International Trade Administration, U.S. Department of Commerce, 14th Street and Constitution Avenue, NW., Washington, DC 20230; telephone: (202) 482–0649.

THE APPLICABLE STATUTE AND REGULATIONS: Unless otherwise indicated, all citations to the statute are references to the provisions effective January 1, 1995, the effective date of the amendments made to the Tariff Act of 1930, as amended (the Tariff Act), by the Uruguay Round Agreements Act. In addition, unless otherwise indicated, all citations to the Department's regulations are to the regulations as codified at 19 CFR part 351 (2000).

SUPPLEMENTARY INFORMATION:

Background

The Department published the antidumping duty order on stainless steel sheet and strip in coils from Germany on July 27, 1999. *See Notice of Amended Final Determination of Sales at Less Than Fair Value and Antidumping Duty Order,* 64 FR 40557. On May 18, 2001, Sensormatic Electronics Corporation (Sensormatic) requested that the Department determine that a specialty stainless steel strip product known as SemiVac 90 is outside the scope of the antidumping duty order on stainless steel sheet and strip in coils from Germany; in the alternative, Sensormatic requested that the Department revoke in part the antidumping duty order on stainless steel sheet and strip in coils from Germany on the basis of ''changed circumstances.'' *See* Letter from Sandler, Travis & Rosenberg, P.A., May 18, 2001, at 2 and 4. On July 5, 2001, producers of the domestic like product (Allegheny Ludlum Corporation, Armco, Inc., J&L Specialty Steel, Inc., Washington Steel Division of Bethlehem Steel Corporation, United Steelworkers

of America, AFL–CIO/CLC, Butler Armco Independent Union, and Zanesville Armco Independent Organization) informed the Department that, consistent with the position stated during the less-than-fair-value investigation, they have no objection to Sensormatic's request. *See* Letter from Collier Shannon Scott, July 5, 2001.

As noted, our August 17, 2001 *Preliminary Results* elicited no comment from any interested party.

Scope of Changed Circumstances Review

The product subject to this changed circumstances review is a permanent magnet iron-chromium-cobalt stainless steel strip containing, by weight, 13 percent chromium, 6 percent cobalt, 71 percent iron, 6 percent nickel and 4 percent molybdenum. The product is supplied in widths up to 1.27 cm (12.7 mm), inclusive, with a thickness between 45 and 75 microns, inclusive. This product exhibits magnetic remanence between 400 and 780 nWb, and coercivity of between 60 and 100 oersteds. This product is currently supplied under the trade name ''SemiVac 90.''

Final Results of Review, and Revocation in Part of the Antidumping Duty Order

Pursuant to sections 751(d)(1) and 782(h)(2) of the Tariff Act, the Department may revoke an antidumping or countervailing duty order, in whole or in part, based on a review under section 751(b) of the Tariff Act (*i.e.,* a changed circumstances review) where the Department determines that producers accounting for substantially all of the production of that domestic like product have expressed a lack of interest in continuance of an order. Similarly, section 351.222(g) of the Department's regulations provides that the Department will conduct a changed circumstances administrative review under 19 CFR 351.216, and may revoke an order (in whole or in part), if it determines that producers accounting for substantially all of the production of the domestic like product to which the order pertains have expressed a lack of interest in the relief provided by the order, in whole or in part, or if other changed circumstances sufficient to warrant revocation exist.

The affirmative statement by the domestic producers expressing no opposition to excluding Semi Vac 90 from the scope of the order constitutes changed circumstances sufficient to warrant partial revocation of this order. In addition, these producers, the original petitioners in this case, account for substantially all of the production of the domestic like product. Therefore, in accordance with sections 751(b) and (d) and 782(h)(2) of the Tariff Act, and 19 CFR 351.216(d), the Department is revoking the order in part as it pertains to the permanent magnet iron-chromium-cobalt stainless steel strip product known as SemiVac 90 described above. We will instruct the U.S. Customs Service to liquidate without regard to antidumping duties, as applicable, all unliquidated entries of this specialty stainless product not subject to final results of an administrative review, as of the date of publication of these final results of review in the **Federal Register**. *See* 19 CFR 351.222. We will also direct the Customs Service to refund any estimated antidumping duties collected, and to pay interest on such refunds in accordance with section 778 of the Tariff Act. Finally, we will instruct the Customs Service to discontinue the suspension of liquidation and the collection of cash deposits on entries of Semi Vac 90 effective on the date of publication of this notice.

This changed circumstances review and revocation in part, and this notice, are published in accordance with sections 751(b) and (d) and 782(h) of the Tariff Act, and 19 CFR 351.216 and 351.222(g).

Dated: September 20, 2001.

Faryar Shirzad,

Assistant Secretary for Import Administration.

[FR Doc. 01–24620 Filed 10–1–01; 8:45 am]

BILLING CODE 3510–DS–P

DEPARTMENT OF ENERGY

[FE Docket No. PP–252]

Application for Presidential Permit; GenPower New York, L.L.C.

AGENCY: Office of Fossil Energy, DOE.

ACTION: Notice of application.

SUMMARY: GenPower New York, L.L.C. (GenPower) has applied for a Presidential permit to construct, operate, maintain and connect a ± 500,000-volt (± 500-kV) Direct Current (DC) submarine electric transmission cable across the U.S. border with Canada.

DATES: Comments, protests, or requests to intervene must be submitted on or before November 1, 2001.

ADDRESSES: Comments, protests, or requests to intervene should be addressed as follows: Office of Coal & Power Import and Export (FE–27), Office of Fossil Energy, U.S. Department of Energy, 1000 Independence Avenue, SW., Washington, DC 20585–0350.

FOR FURTHER INFORMATION CONTACT: Ellen Russell (Program Office) 202–586–9624 (or by electronic mail to: *Ellen.Russell@hq.doe.gov*) or Michael T. Skinker (Program Attorney) 202–586–6667.

SUPPLEMENTARY INFORMATION: The construction, operation, maintenance and connection of facilities at the international border of the United States for the transmission of electric energy between the United States and a foreign country is prohibited in the absence of a Presidential permit issued pursuant to Executive Order (EO) 10485, as amended by EO 12038.

On September 19, 2001, GenPower filed an application with the Office of Fossil Energy (FE) of the Department of Energy (DOE) for a Presidential permit. GenPower proposes to install a high voltage direct current (HVDC) submarine cable extending from a proposed 820-megawatt combined cycle, natural gas powerplant located in Goldboro, Guysborough County, Nova Scotia, Canada, to New York City, New York, a distance of approximately 800 to 900 miles (1,300 to 1,450 kilometers (km)). GenPower's proposed terminus in New York City is the Consolidated Edison Company's (ConEd) West 49th Street substation. GenPower proposes, based on technical and geological limitations, to bury the cable to a depth of approximately 3 feet (1 meter).

Since the restructuring of the electric power industry began, resulting in the introduction of different types of competitive entities into the marketplace, DOE has consistently expressed its policy that cross-border trade in electric energy should be subject to the same principles of comparable open access and non-discrimination that apply to transmission in interstate commerce. DOE has stated that policy in export authorizations granted to entities requesting authority to export over international transmission facilities. Specifically, DOE expects transmitting utilities owning border facilities constructed pursuant to Presidential permits to provide access across the border in accordance with the principles of comparable open access and non-discrimination contained in the FPA and articulated in Federal Energy Regulatory Commission Order No. 888, as amended (Promoting Wholesale Competition Through Open Access Non-Discriminatory Transmission Services by Public Utilities). In furtherance of this policy, DOE intends

to condition any Presidential permit issued in this proceeding on compliance with these open access principles.

Procedural Matters: Any person desiring to become a party to this proceeding or to be heard by filing comments or protests to this application should file a petition to intervene, comment or protest at the address provided above in accordance with § 385.211 or § 385.214 of the FERC's rules of practice and procedures (18 CFR 385.211, 385.214). Fifteen copies of each petition and protest should be filed with the DOE on or before the date listed above.

Additional copies of such petitions to intervene or protests also should be filed directly with: John O'Leary, GenPower New York, L.L.C., 1040 Great Plain Avenue, Needham, MA 02494.

Before a Presidential permit may be issued or amended, the DOE must determine that the proposed action will not adversely impact on the reliability of the U.S. electric power supply system. In addition, DOE must consider the environmental impacts of the proposed action (i.e., granting the Presidential permit, with any conditions and limitations, or denying the permit) pursuant to NEPA. DOE also must obtain the concurrence of the Secretary of State and the Secretary of Defense before taking final action on a Presidential permit application.

The NEPA compliance process is a cooperative, non-adversarial process involving members of the public, state governments and the Federal government. The process affords all persons interested in or potentially affected by the environmental consequences of a proposed action an opportunity to present their views, which will be considered in the preparation of the environmental documentation for the proposed action. Intervening and becoming a party to this proceeding will not create any special status for the petitioner with regard to the NEPA process. Notice of upcoming NEPA activities and information on how the public can participate in those activities will appear in the **Federal Register**.

Copies of this application will be made available, upon request, for public inspection and copying at the address provided above. In addition, the application may be reviewed or downloaded from the Fossil Energy Home Page at: *http://www.fe.doe.gov.* Upon reaching the Fossil Energy Home page, select ''Electricity Regulation'' and then ''Pending Proceedings'' from the options menu.

Issued in Washington, DC, on September 26, 2001.

Anthony J. Como,

Deputy Director, Electric Power Regulation, Office of Coal & Power Import/Export, Office of Coal & Power Systems, Office of Fossil Energy.

[FR Doc. 01–24606 Filed 10–1–01; 8:45 am]

BILLING CODE 6450–01–P

DEPARTMENT OF ENERGY

Public Scoping Meeting for the Programmatic Environmental Impact Statement on the Disposition of Scrap Metals

AGENCY: Department of Energy.

ACTION: Notice of change of location of meeting.

SUMMARY: The Department of Energy (DOE) announces a change of location from New York City, NY to Philadelphia, PA for a public scoping meeting on the programmatic environmental impact statement (PEIS) that DOE is preparing on the policy alternatives for the disposition of DOE scrap metals that may have residual surface radioactivity.

DATES: On October 18, 2001, DOE will conduct a public scoping meeting in Philadelphia, PA. All meeting dates, times, and locations announced in the September 6, 2001, **Federal Register** (66 FR 46613) remain the same except that DOE will not conduct a public scoping meeting in New York, NY. The scoping period ends November 9, 2001. DOE invites Federal agencies, Native American tribes, state and local governments, and members of the general public to comment on the scope of this PEIS. DOE will consider all comments received by the close of the scoping period and will consider comments received after that date to the extent practicable. The Philadelphia, PA public scoping meeting will be at the following location:

Meeting: Philadelphia Convention Center, 1101 Arch Street, Philadelphia, PA 19107; October 18, 2001, 2–5 p.m., 8–10 p.m.

ADDRESSES: Comments on the scope of the PEIS may be mailed to the address below or sent by facsimile or electronic mail. Written comments may be mailed to the following address. Kenneth G. Picha, Jr., Office of Technical Program Integration, EM–22, ATTN: Metals Disposition PEIS, Office of Environmental Management, U.S. Department of Energy, 1000 Independence Avenue, SW, Washington, DC. 20585–0113, Telephone: (301)-903–7199.

Otherwise, send comments via facsimile to Metals Disposition PEIS at 301–903–9770 or send electronic mail to *Metals.Disposition.PEIS@em.doe.gov* or the Web site at *www.em.doe.gov/smpeis.*

FOR FURTHER INFORMATION CONTACT: To request further information about this PEIS, the public scoping meetings, or to be placed on the PEIS distribution list, use any of the methods listed under **ADDRESSES** above. For background documents in hard copy related to this PEIS contact the DOE Center for Environmental Management Information at 800–736–3282. For general information concerning the DOE National Environmental Policy Act (NEPA) process, contact: Carol Borgstrom, Director, Office of NEPA Policy and Compliance (EH–42), U.S. Department of Energy, 1000 Independence Avenue, SW, Washington, D.C. 20585–0119, Telephone: 202–586–4600, Voice Mail: 800–472–2756, Facsimile: 202–586–7031.

Additional NEPA information is also available on the DOE website: http// tis.eh.doe.gov/nepa/

SUPPLEMENTARY INFORMATION: DOE generates surplus and scrap material during the normal course of activities, and attempts to recycle as much as possible consistent with common industrial practice. DOE is also guided by several Executive Orders that provide direction to Federal Agencies on recycling practices to avoid unnecessary energy consumption and use of raw materials for the development of new products. Some of this material consists of scrap metal that may contain residual surface radioactivity.

On July 12, 2001, DOE issued a Notice of Intent (66 FR 36562) to prepare a PEIS on the DOE policy alternatives for the disposition of scrap metals that may contain residual surface radioactivity. On September 6, 2001, DOE issued a Notice in the **Federal Register** (66 FR 46613) extending the public scoping period and announcing additional public scoping meetings for the PEIS, including a meeting in New York City. The Department now believes, however, that given the recent terrorist attack in lower Manhattan, this subject is inappropriate for a public meeting in Midtown Manhattan at this time. DOE is instead scheduling a meeting in Philadelphia, PA, as discussed above under **DATES**. The remaining public scoping meetings announced in the September 6, Notice are as follows:

Meeting: Ken Edwards Community Center,1527 Fourth Street, Santa Monica, CA 90401, October 8, 2001, 8–10 p.m.

Meeting: Simi Valley City Hall, 2929 Tapo Canyon Road, Simi Valley, CA 93063; October 9, 2001, 8–10 p.m.

Meeting: Zuhrah Shrine Center, 2540 Park Avenue, Minneapolis, MN 55404; October 16, 2001, 2–5 p.m. 8–10 p.m.

At the scoping meetings, the public will have the opportunity to ask questions and to comment orally or in writing on the scope of the PEIS, including the alternatives and issues that DOE should consider. Also, at these meetings, DOE plans to provide background information on the proposed scope of the PEIS, issues and impacts proposed to be evaluated, and the PEIS preparation schedule.

DOE has conducted public scoping meetings on the PEIS in the following locations: North Augusta, SC; Oak Ridge, TN; Oakland, CA; Richland, WA; Cincinnati, OH; and, Washington, DC. The public scoping period originally was to continue until September 10, 2001. However, in response to public comments and to ensure that the public has ample opportunity to provide comments, DOE extended the public scoping period by 60 days and scheduled additional meetings as specified above. The schedule for completion of the Draft PEIS is March, 2002, and for the Final PEIS is August, 2002. Further information on this PEIS is contained in the July 12, 2001, Notice of Intent.

Issued in Washington, D.C., on September 26, 2001.

Steven V. Cary,

Acting Assistant Secretary, Office of Environment, Safety and Health.

[FR Doc. 01–24607 Filed 10–1–01; 8:45 am]

BILLING CODE 6450–01–P

DEPARTMENT OF ENERGY

[Solicitation Number DE–PS07–02ID14238]

Idaho Operations Office; University Reactor Instrumentation (URI) Program

AGENCY: Idaho Operations Office, DOE.

ACTION: Notice of availability of solicitation for awards of financial assistance.

SUMMARY: The U.S. Department of Energy, Idaho Operations Office, is soliciting applications for special research grant awards that will upgrade and improve U.S. nuclear research and training reactors. It is anticipated that on September 27, 2001, a full text for Solicitation Number DE–PS07–02ID14238 for the 2002 URI Program will be made available at the Industry Interactive Procurement System (IIPS) Website at: *http://e-center.doe.gov*: The deadline for receipt of applications will be on November 29, 2001. Applications are to be submitted via the IIPS Website. Directions on how to apply and submit applications are detailed under the solicitation on the Website.

FOR FURTHER INFORMATION CONTACT: Kathleen Stallman, Contract Specialist at *stallmkm@id.doe.gov*.

SUPPLEMENTARY INFORMATION: The solicitation will be issued in accordance with 10 CFR 600.6(b), eligibility for awards under this program will be restricted to U.S. colleges and universities having a duly licensed, operating nuclear research or training reactor because the purpose of the University Reactor Instrumentation (URI) program is to upgrade and improve the U.S. university nuclear research and training reactors and to contribute to strengthening the academic community's nuclear engineering infrastructure.

The statutory authority for this program is Public Law 95–91.

Issued in Idaho Falls on September 25, 2001.

Michael L. Adams,

Acting Director, Procurement Services Division.

[FR Doc. 01–24608 Filed 10–1–01; 8:45 am]

BILLING CODE 6450–01–P

DEPARTMENT OF ENERGY

Office of Civilian Radioactive Waste Management: Site Recommendation Consideration Process; Las Vegas Science Center To Serve as Extended Hearing Facility

AGENCY: Office of Civilian Radioactive Waste Management, Department of Energy.

ACTION: Notice of an extended hearing facility to receive official comments.

SUMMARY: The Department of Energy (the Department) announces that its Las Vegas Science Center will be used to receive public comments on the possible recommendation of the Yucca Mountain Site in Nevada for development as a spent nuclear fuel and high-level radioactive waste geologic repository. In addition, the Science Centers in Pahrump, Nevada, and Beatty, Nevada, will have forms available for written comments.

DATES: Starting on September 26, 2001, and continuing through October 15, 2001, the Las Vegas Science Center will be open from 10 a.m. to 6 p.m. Tuesday through Friday, and on Saturdays, from 10 a.m. to 4 p.m.

ADDRESSES: Locations for the three Science Centers in Nevada are: Las Vegas—4101–B Meadows Lane; Pahrump—1141 South Highway 160; Beatty—100 North E Avenue.

Written comments may also be addressed to Carol Hanlon, U.S. Department of Energy, Yucca Mountain Site Characterization Office (M/S #205), P.O. Box 30307, North Las Vegas, Nevada, 89036–0307.

FOR FURTHER INFORMATION CONTACT: U.S. Department of Energy, Office of Civilian Radioactive Waste Management, Yucca Mountain Site Characterization Office, (M/S #025), P.O. Box 30307, North Las Vegas, Nevada 89036–0307, 1–800–967–3477.

SUPPLEMENTARY INFORMATION: In the August 21, 2001, **Federal Register** Notice (66 FR 43850–43851), the Department announced the scheduling of public hearings in Las Vegas, Nevada on September 5, 2001, in Amargosa Valley, Nevada on September 12, 2001, and in Pahrump, Nevada on September 13, 2001. The Department decided to postpone the latter two hearings in light of the recent terrorist attacks on the United States. In a notice published on September 27, 2001 (66 FR 49372–49373), the latter two hearings were rescheduled to October 10 and October 12, 2001, in Amargosa Valley, Nevada and Pahrump, Nevada, respectively.

For those members of the public who do not participate in these public hearings, the Department is providing them with an opportunity to submit comments at the Las Vegas Science Center, prior to the end of the comment period, on the possible recommendation of the Yucca Mountain Site for development as a spent nuclear fuel and high-level radioactive waste repository. A Department official and court reporter will be available to provide project information and receive public testimony from anyone wishing to provide official comments. All comments will be considered as part of the official public record. Written testimony may also be submitted as part of the official record. Posters and relevant information materials on the Yucca Mountain project will also be available at the Science Center.

Citizens are encouraged to reserve time slots to offer testimony by calling 1–800–967–3477. Oral testimony will be limited to 10 minutes in order to provide proper consideration to all individuals wishing to testify. Citizens are encouraged to arrive no later than 15 minutes prior to their scheduled testimony time; citizens arriving after their timeslot has passed will be accommodated to the extent possible.

Walk-in testimony will be accepted as the schedule permits, with priority given to those who have reserved time in advance. Individuals who visit the Las Vegas Science Center to provide testimony will do so in the FOIA (Freedom of Information Act) Reading Room.

In addition, citizens can visit DOE Science Centers located in Pahrump, Nevada, and Beatty, Nevada, to submit written comments until the close of the comment period. Comments can also be submitted via e-mail through the web site at *www.ymp.gov.*

Additional information on the comment process at the Science Centers and on the Civilian Radioactive Waste Management program may be obtained at the Yucca Mountain web site at *www.ymp.gov* or by calling 1–800–967–3477.

Issued in Washington, DC on September 26, 2001.

Lake H. Barrett,

Acting Director.

[FR Doc. 01–24626 Filed 10–1–01; 8:45 am]

BILLING CODE 6450–01–P

DEPARTMENT OF ENERGY

Office of Energy Efficiency and Renewable Energy

Federal Energy Management Program; Federal Purchasing of Energy-Efficient Standby Power Devices

AGENCY: Office of Energy Efficiency and Renewable Energy, Department of Energy.

ACTION: Notice of public meeting.

SUMMARY: The Department of Energy (DOE or Department) will hold a public meeting to discuss plans for implementing Executive Order 13221, which directs government agencies to purchase devices with minimal standby power—at or below one watt where available. The Department is interested in receiving comments on which products using standby power are purchased in significant numbers for use in federal facilities, which of these have models available with low standby power levels at or near 1 watt, and comments on the Department's proposed approach for identification of low-standby power products.

DATES: The public meeting will be held on Wednesday, October 24, 2001, from 9 a.m. to 4 p.m.

ADDRESSES: The meeting will be held at the Crystal City Hilton, 2399 Jefferson Davis Highway, Arlington, Virginia 22201. Written comments are welcome, either before or after the public meeting, but no later than October 26, 2001. Please submit written comments to: Ms. Alison Thomas, U.S. Department of Energy, Office of Energy Efficiency and Renewable Energy, Federal Energy Management Program, EE–90, 1000 Independence Avenue, SW., Washington, DC 20585–0121. Telephone: (202) 586–2099; Telefax: (202) 586–3000. Please label comments both on the envelope and on the documents and submit them for DOE receipt by October 26, 2001. Please submit one signed copy and a computer diskette (WordPerfect or Microsoft Word). The Department will also accept electronically-mailed comments, e-mailed to *alison.thomas@ee.doe.gov*.

Additional information on standby power, federal purchasing, and Executive Order 13221 can be found on the DOE website at: *http://www.eren.doe.gov/femp/procurement.* Copies of the agenda, a list of attendees, the public comments received, and this notice may be read at the Freedom of Information Reading Room, U.S. Department of Energy, Forrestal Building, Room 1E–190, 1000 Independence Avenue, SW., Washington, DC 20585, (202) 586–3142, between the hours of 9 a.m. and 4 p.m., Monday through Friday, except Federal holidays.

FOR FURTHER INFORMATION, CONTACT: Ms. Alison Thomas, Program Manager, U.S. Department of Energy, Office of Energy Efficiency and Renewable Energy, EE–90, 1000 Independence Avenue, SW., Washington, DC 20585–0121, (202) 586–2099, email *alison.thomas@ee.doe.gov*.

SUPPLEMENTARY INFORMATION: On July 31, 2001, President Bush signed Executive Order 13221, directing government agencies to purchase devices with minimal standby power—at or below one watt where available. He further ordered the Department of Energy (DOE), in consultation with the General Services Administration (GSA), the Defense Logistics Agency (DLA) and others, to develop a list of products that comply with this requirement. If no devices with standby at or below 1 W are available within a product category, DOE is to recommend a standby power level that is cost-effective.

The DOE Federal Energy Management Program (FEMP) will hold an informal public meeting to present its proposed approach to implementing this Order and to solicit views from the public and from federal agencies themselves on practical and effective implementation steps.

The workshop will cover initial ideas on the range of low-power standby products to be included, how to test and certify standby power levels, how to create a public-domain database on such products based on voluntary data submitted by federal suppliers and manufacturers, and procedures for periodic updating of the database and the categories of products.

Background information on standby power, the Executive Order, and FEMP's ideas on implementation will be presented in the morning. Topics will include the relation of this new effort to FEMP's other activities in support of energy-efficient federal purchasing and to the Energy Star™ labeling program.

After a lunch break, the meeting will be open to brief presentations (up to 5 minutes each) and discussion of comments from the public, including federal agencies. FEMP is interested in receiving feedback from vendors, manufacturers, and other interested parties.

The workshop agenda includes:

- Why are we here?—the Executive Order 13221, workshop objectives, FEMP's approach
- Background on standby power with questions
- Technical issues with questions
- Implementing the Executive Order
- Proposed approach for identifying products and schedule with questions
- Open for public comments

The meeting will be conducted in an informal, conference style. There shall be no discussion of proprietary information, costs or prices, market shares, or other commercial matters regulated by the U.S. antitrust laws. After the meeting and expiration of the period for submitting written statements, the Department will begin consideration of the comments received.

If you would like to participate in the meeting, receive meeting materials, or be added to the DOE mailing list to receive future notices and information regarding the energy conservation program for consumer products and commercial and industrial equipment, please contact Ms. Alison Thomas at (202) 586–2099 or *alison.thomas@ee.doe.gov*.

Issued in Washington, DC, on September 26, 2001.

David K. Garman,

Assistant Secretary for Energy Efficiency and Renewable Energy.

[FR Doc. 01–24605 Filed 10–1–01; 8:45 am]

BILLING CODE 6450–01–P

DEPARTMENT OF ENERGY

Federal Energy Regulatory Commission

[Docket No. IC01–02A–000, FERC Form 2–A]

Proposed Information Collection and Request for Comments

September 26, 2001.

AGENCY: Federal Energy Regulatory Commission.

ACTION: Notice of proposed information collection and request for comments.

SUMMARY: In compliance with the requirements of Section 3506(c)(2)(a) of the Paperwork Reduction Act of 1995 (Pub. L. No. 104–13), the Federal Energy Regulatory Commission (Commission) is soliciting public comment on the specific aspects of the information collection described below.

DATES: Consideration will be given to comments submitted within 60 days of the publication of this notice.

ADDRESSES: Copies of the proposed collection of information can be obtained from and written comments may be submitted to the Federal Energy Regulatory Commission, Attn: Michael Miller, Office of the Chief Information Officer, CI–1, 888 First Street NE., Washington, DC 20426.

FOR FURTHER INFORMATION CONTACT: Michael Miller may be reached by telephone at (202)208–1415, by fax at (202)208–2425, and by e-mail at *mike.miller@ferc.fed.us.*

SUPPLEMENTARY INFORMATION: The information collected under the requirements of FERC Form 2–A ''Annual Report of Nonmajor Natural Gas Companies'' (OMB No. 1902–0030) is used by the Commission to implement the statutory provisions of the Natural Gas Act (NGA) 15 U.S.C. 717. The FERC Form 2–A is a financial and operating report for nonmajor natural gas pipeline owners. A ''nonmajor'' pipeline owner is one that has combined gas sales for resale and has gas transported or stored for a fee that exceeds 200,000 Dth but which is less than 50 million Dth, in each of the three previous calendar years. Under the Form 2–A, the Commission investigates, collects and records data, and prescribes rules and regulations concerning accounts, records and memoranda as necessary to administer the NGA. The Commission is empowered to prescribe a system of accounts for jurisdictional gas pipelines and after notice and opportunity for hearing, may determine the accounts in which particular outlays and receipts will be entered, charged or credited.

FERC staff uses the data in the continuous review of the financial condition of jurisdictional companies, in various rate proceedings and in the Commission's audit program. FERC Form 2–A data are also used to compute annual charges which are assessed against each jurisdictional natural gas pipeline and which are necessary to recover the Commission's annual costs.

The annual financial information filed with the Commission is a mandatory requirement submitted in a prescribed format which is filed electronically and on paper. The Commission implements these filing requirements in 18 CFR Parts 158, 201, 260.2 and 385.2011.

Action: The Commission is requesting a three-year extension of the current expiration date, with no changes to the existing information collection.

Burden Statement: Public reporting burden for this collection is estimated as:

Number of respondents Annually (1)	Number of responses per respondent (2)	Average burden hours per response (3)	Total annual burden hours (1)×(2)×(3)
53	1	30	1,590

Estimated cost burden to respondents: 1,590 hours/2,080 hours per year × $117,041 per year = $89,469. The cost per respondent is equal to $1,688.

The reporting burden includes the total time, effort, or financial resources expended to generate, maintain, retain, disclose, or provide the information including: (1) Reviewing instructions; (2) developing, acquiring, installing, and utilizing technology and systems for the purposes of collecting, validating, verifying, processing, maintaining, disclosing and providing information; (3) adjusting the existing ways to comply with any previously applicable instructions and requirements; (4) training personnel to respond to a collection of information; (5) searching data sources; (6) completing and reviewing the collection of information; and (7) transmitting, or otherwise disclosing the information.

The cost estimate for respondents is based upon salaries for professional and clerical support, as well as direct and indirect overhead costs. Direct costs include all costs directly attributable to providing this information, such as administrative costs and the cost for information technology. Indirect or overhead costs are costs incurred by an organization in support of its mission. These costs apply to activities which benefit the whole organization rather than any one particular function or activity.

Comments are invited on: (1) Whether the proposed collection of information is necessary for the proper performance of the functions of the Commission, including whether the information will have practical utility; (2) the accuracy of the agency's estimate of the burden of the proposed collection of information, including the validity of the methodology and assumptions used; (3) ways to enhance the quality, utility and clarity of the information to be collected; and (4) ways to minimize the burden of the collection of information on those who are to respond.

Linwood A. Watson, Jr.,

Acting Secretary.

[FR Doc. 01–24546 Filed 10–1–01; 8:45 am]

BILLING CODE 6717–01–P

DEPARTMENT OF ENERGY

Federal Energy Regulatory Commission

Notice of Application To Permit Non-Project Use of Project Lands and Soliciting Comments, Motions To Intervene, and Protests

September 26, 2001.

Take notice that the following application has been filed with the Commission and is available for public inspection:

a. *Application Type:* Amendment of License.

b. *Project No.:* 2146–093.

c. *Date Filed:* September 13, 2001.

d. *Licensee:* Alabama Power Company.

e. *Name of Project:* Coosa River Hydroelectric Project.

f. *Location:* The project is located on the Coosa River, in Calhoun, St. Clair, and Etowah Counties, Alabama. This project does not occupy any federal lands.

g. *Filed Pursuant to:* Federal Power Act, 16 U.S.C. 791(a)–825(r).

h. *Licensee Contact:* Mr. Keith Bryant, Alabama Power Company, PO Box 2641, Birmingham, Alabama 35291. (205) 257–1403.

i. *FERC Contact:* Any questions on this notice should be addressed to Steve Naugle, steven.naugle@ferc.fed.us, or (202) 219–2805.

j. *Deadline for filing comments and or motions:* (October 27, 2001).

All documents (original and eight copies) should be filed with Mr. David P. Boergers, Secretary, Federal Energy Regulatory Commission, 888 First Street, NE., Washington, DC 20426. Comments, protests and interventions may be filed electronically via the internet in lieu of paper. See, 18 CFR 385.2001(a)(1)(iii) and the instructions on the Commission's web site at *http://www.ferc.fed.us/rfi/doorbell.htm*. Please reference the following number, P–2146–093, on any comments or motions filed.

k. *Description of Proposal:* The licensee proposes to permit those elements of a planned residential development proposed by Pinnacle Communities LLC that would be located within the project boundary. The proposed development is located on Lay Reservoir, approximately three miles from the City of Childersburg in Talladega County, Alabama. The elements of the development that would occupy project lands include: A nine-hole, par-three, golf course; walking trails; a waterfront park with picnic shelters, a gazebo, and a swimming pool; tennis courts; an activities field; a community garden; boat docks to accommodate up to 84 watercraft; a shoreline swimming area; a boat ramp; a boat storage area; and an access road with adjacent parking areas.

The proposed development, known as RiverWalk, would occupy a total of 239 acres and has about 2,700 feet of water frontage. Approximately 68 acres of the development are project lands (below contour elevation 407 mean sea level) for which the licensee holds a flood easement. The development, which would be completed in four phases, would ultimately consist of 336 residential lots. Approximately 90 of the lots are partly within the project boundary. Phase I, consisting of 79 lots, has already been completed.

l. *Locations of the Application:* A copy of the application is available for inspection and reproduction at the Commission's Public Reference Room, at 888 First Street, NE., Room 2A, Washington, DC 20426, or by calling 202–208–1371. The application may be viewed on-line at *http://www.ferc.fed.us/online/rims.htm* (call 202–208–2222 for assistance). A copy is also available for inspection and reproduction at the address in item h above.

m. Individuals desiring to be included on the Commission's mailing list should so indicate by writing to the Secretary of the Commission.

n. Comments, Protests, or Motions to Intervene—Anyone may submit comments, a protest, or a motion to intervene in accordance with the requirements of Rules of Practice and Procedure, 18 CFR 385.210, 385.211, 385.214. In determining the appropriate action to take, the Commission will consider all protests or other comments filed, but only those who file a motion to intervene in accordance with the Commission's Rules may become a party to the proceeding. Any comments, protests, or motions to intervene must be received on or before the specified comment date for the particular application.

o. Filing and Service of Responsive Documents—Any filings must bear in all capital letters the title ''COMMENTS'', ''RECOMMENDATIONS FOR TERMS AND CONDITIONS'', ''PROTEST'', OR ''MOTION TO INTERVENE'', as applicable, and the Project Number of the particular application to which the filing refers. A copy of any motion to intervene must also be served upon each representative of the Applicant specified in the particular application.

p. Agency Comments—Federal, state, and local agencies are invited to file comments on the described application. A copy of the application may be obtained by agencies directly from the Applicant. If an agency does not file comments within the time specified for filing comments, it will be presumed to have no comments. One copy of an agency's comments must also be sent to the Applicant's representatives.

Linwood A. Watson, Jr.,

Acting Secretary.

[FR Doc. 01–24549 Filed 10–1–01; 8:45 am]

BILLING CODE 6717–01–P

DEPARTMENT OF ENERGY

Federal Energy Regulatory Commission

[Docket No. RP01–611–000]

Dominion Transmission Inc.; Notice of Proposed Changes in FERC Gas Tariff

September 26, 2001.

Take notice that on September 21, 2001, Dominion Transmission Inc. (DTI), tendered for filing as part of its FERC Gas Tariff, Third Revised Volume No. 1, the following tariff sheets, with an effective date of November 1, 2001:

Eighth Revised Sheet No. 31
Eleventh Revised Sheet No. 32
Fifth Revised Sheet No. 33
Fifth Revised Sheet No. 34
Seventh Revised Sheet No. 35
Third Revised Sheet No. 37

DTI states that the purpose of this filing is to comply with Article VII, Section G, of the August 31, 1998, Stipulation and Agreement in Docket Nos. RP97–406, et al., approved by the Commission in CNG Transmission Corporation, 85 FERC 61,261 (1998). That settlement provides for the phased conversion of firm storage services under Rate Schedule GSS-II, to corresponding services under Rate Schedule GSS and Rate Schedule FT (FT-GSS). Article VII, Section G, permits DTI to implement base rate changes to reflect each phase of the conversion.

DTI states that copies of this letter of transmittal and enclosures are being served upon DTI's customers and interested state commissions.

Any person desiring to be heard or to protest said filing should file a motion to intervene or a protest with the Federal Energy Regulatory Commission, 888 First Street, NE., Washington, DC 20426, in accordance with Sections 385.214 or 385.211 of the Commission's Rules and Regulations. All such motions or protests must be filed in accordance with Section 154.210 of the Commission's Regulations. Protests will be considered by the Commission in determining the appropriate action to be taken, but will not serve to make protestants parties to the proceedings. Any person wishing to become a party must file a motion to intervene. Copies of this filing are on file with the Commission and are available for public inspection. This filing may also be viewed on the web at *http://www.ferc.gov* using the ''RIMS'' link, select ''Docket#'' and follow the instructions (call 202–208–2222 for assistance). Comments, protests and interventions may be filed electronically via the Internet in lieu of paper. See, 18 CFR 385.2001(a)(1)(iii) and the instructions on the Commission's Web site under the ''e-Filing'' link.

Linwood A. Watson, Jr.,

Acting Secretary.

[FR Doc. 01–24551 Filed 10–1–01; 8:45 am]

BILLING CODE 6717–01–P

DEPARTMENT OF ENERGY

Federal Energy Regulatory Commission

[Docket No. RP00–632–005]

Dominion Transmission Inc.; Notice of Compliance Filing

September 26, 2001.

Take notice that on September 21, 2001, Dominion Transmission Inc. (DTI), tendered for filing as part of its FERC Gas Tariff, Third Revised Volume No. 1, the following tariff sheets, with an effective date of November 1, 2001:

Seventh Revised Sheet No. 31
Tenth Revised Sheet No. 32
Fifth Revised Sheet No. 33
Sixth Revised Sheet No. 35
First Revised Sheet No. 606
Second Revised Sheet No. 1000
First Revised Sheet No. 1112
First Revised Sheet No. 1113
First Revised Sheet No. 1114
First Revised Sheet No. 1117
Original Sheet No. 1117A
First Revised Sheet No. 1119
First Revised Sheet No. 1120
Second Revised Sheet No. 1121
Second Revised Sheet No. 1122
First Revised Sheet No. 1123
First Revised Sheet No. 1124
First Revised Sheet No. 1125
First Revised Sheet No. 1126
First Revised Sheet No. 1171
First Revised Sheet No. 1175
Second Revised Sheet No. 1184

DTI states that the purpose of this filing is to comply with the Settlement that DTI filed on June 22, 2001, in the captioned proceeding, which was approved by the Commission's letter order issued September 13, 2001, 96 FERC ¶ 61,288 (2001).

DTI states that copies of this letter of transmittal and enclosures are being served upon DTI's customers and interested state commissions and to the parties to the proceeding.

Any person desiring to protest said filing should file a protest with the Federal Energy Regulatory Commission, 888 First Street, NE., Washington, DC 20426, in accordance with section 385.211 of the Commission's Rules and Regulations. All such protests must be filed in accordance with Section 154.210 of the Commission's Regulations. Protests will be considered by the Commission in determining the appropriate action to be taken, but will not serve to make protestants parties to the proceedings. Copies of this filing are on file with the Commission and are available for public inspection. This filing may also be viewed on the web at *http://www.ferc.gov* using the ''RIMS'' link, select ''Docket#'' and follow the instructions (call 202–208–2222 for assistance). Comments, protests and interventions may be filed electronically via the Internet in lieu of paper. See, 18 CFR 385.2001(a)(1)(iii) and the instructions on the Commission's web site under the ''e-Filing'' link.

Linwood A. Watson, Jr.,

Acting Secretary.

[FR Doc. 01–24550 Filed 10–1–01; 8:45 am]

BILLING CODE 6717–01–P

DEPARTMENT OF ENERGY

Federal Energy Regulatory Commission

[Docket No. ER01–3093–000]

San Diego Gas & Electric Company; Notice of Filing

September 25, 2001.

Take notice that on September 24, 2001, San Diego Gas & Electric Company (SDG&E) tendered for filing with the Federal Energy Regulatory Commission (Commission), its Service Agreements numbers 9 and 10 to its FERC Electric Tariff, First Revised Volume No. 6, two interconnection agreements. Both agreements relate to the interconnection of a new generation plant to be owned by CalPeak Power—Border, LLC (CalPeak Enterprise). The plant, with a capacity of 49 MW, is being constructed on an expedited basis to meet potential shortfalls in the Western states' electric supplies. It will be located near the City of Escondido in San Diego County, California, and is expected to begin service on or about September 24, 2001.

Service Agreement No. 9 is an Expedited Interconnection Facilities Agreement dated September 21, 2001 between SDG&E and CalPeak Enterprise, under which SDG&E will construct, operate and maintain the proposed interconnection facilities. Service Agreement No. 10, the Interconnection Agreement between SDG&E and CalPeak Enterprise dated September 21, 2001, establishes interconnection and operating responsibilities and associated communications procedures between the parties. SDG&E requests an effective date of September 21, 2001 for both agreements.

SDG&E states that copies of the amended filing have been served on CalPeak Enterprise and on the California Public Utilities Commission.

Any person desiring to be heard or to protest such filing should file a motion to intervene or protest with the Federal Energy Regulatory Commission, 888 First Street, NE., Washington, DC 20426, in accordance with Rules 211 and 214 of the Commission's Rules of Practice and Procedure (18 CFR 385.211 and 385.214). All such motions and protests should be filed on or before October 15, 2001. Protests will be considered by the Commission to determine the appropriate action to be taken, but will not serve to make protestants parties to the proceedings. Any person wishing to become a party must file a motion to intervene. Copies of this filing are on file with the Commission and are available for public inspection. This filing may also be viewed on the Commission's web site at *http://www.ferc.gov* using the ''RIMS'' link, select ''Docket#'' and follow the instructions (call 202–208–2222 for assistance). Comments, protests and interventions may be filed electronically via the internet in lieu of paper. See, 18 CFR 385.2001(a)(1)(iii) and the instructions on the Commission's web site under the ''e-filing'' link.

Linwood A. Watson, Jr.

Acting Secretary.

[FR Doc. 01–24545 Filed 10–1–01; 8:45 am]

BILLING CODE 6717–01–P

DEPARTMENT OF ENERGY

Federal Energy Regulatory Commission

Notice of Declaration of Intention and Soliciting Comments Motions To Intervene, and Protests

September 26, 2001.

Take notice that the following application has been filed with the Commission and is available for public inspection:

a. *Application Type:* Declaration of Intention.

b. *Docket No:* DI01–9–000.

c. *Date Filed:* September 10, 2001.

d. *Applicant:* Charles Oliver.

e. *Name of Project:* Colburn Creek.

f. *Location:* The Colburn Creek Hydroelectric Project is located within Bonner County, Idaho, on Colburn Creek. (T. 58 N., R. 2 W., secs. 2, 3, and 11, Boise Meridian). The project does not occupy Federal or Tribal land.

g. *Filed Pursuant to:* Section 23(b)(1) of the Federal Power Act, 16 U.S.C. §§ 817(b).

h. *Applicant Contact:* Bret Daugherty, P.O. Box 558, Darby, MT 59829, telephone number and FAX (406) 363–4628, and E-Mail bretdaugherty@aol.com.

i. *FERC Contact:* Any questions on this notice should be addressed to Diane M. Murray at (202) 219–2682, or E-mail address: diane.murray@ferc.fed.us.

j. *Deadline for filing comments and/or motions:* October 26, 2001.

All documents (original and eight copies) should be filed with: David P. Boergers, Secretary, Federal Energy Regulatory Commission, 888 First Street, NE., Washington, DC 20426. Copies of this filing are on file with the Commission and are available for public inspection. Comments, protests and interventions may be filed electronically via the Internet in lieu of paper. See, 18 CFR 385.2001(a)(1)(iii) and the instructions on the Commission's web site under the ''e-Filing'' link.

Please include the docket number (DI01–9–000) on any comments or motions filed.

k. *Description of Project:* The proposed project consists of: (1) A small dam; (2) a penstock, approximately 1 mile long; (3) a powerhouse containing one 230 kW generating unit; and (2) appurtenant facilities.

When a Declaration of Intention is filed with the Federal Energy Regulatory Commission, the Federal Power Act requires the Commission to investigate and determine if the interests of interstate or foreign commerce would be affected by the project. The Commission also determines whether or not the project: (1) Would be located on a navigable waterway; (2) would occupy or affect public lands or reservations of the United States; (3) would utilize surplus water or water power from a government dam; or (4) if applicable, has involved or would involve any construction subsequent to 1935 that may have increased or would increase the project's head or generating capacity, or have otherwise significantly modified the project's pre-1935 design or operation.

l. *Locations of the Application:* Copies of this filing are on file with the Commission and are available for public inspection. This filing may also be viewed on the web at *http://www.ferc.gov* using the ''RIMS'' link, select ''Docket#'' and follow the instructions (call 202–208–2222 for assistance).

m. Individuals desiring to be included on the Commission's mailing list should so indicate by writing to the Secretary of the Commission.

n. Protests or Motions to Intervene—Anyone may submit a protest or a motion to intervene in accordance with the requirements of Rules of Practice and Procedure, 18 CFR 385.210, 385.211, and 385.214. In determining the appropriate action to take, the Commission will consider all protests filed, but only those who file a motion to intervene in accordance with the Commission's Rules may become a party to the proceeding. Any protests or motions to intervene must be received on or before the specified deadline date for the particular application.

o. Filing and Service of Responsive Documents—Any filings must bear in all capital letters the title ''COMMENTS'', ''RECOMMENDATIONS FOR TERMS AND CONDITIONS'', ''PROTEST'', OR ''MOTION TO INTERVENE'', as applicable, and the Project Number of the particular application to which the filing refers. A copy of any motion to intervene must also be served upon each representative of the Applicant specified in the particular application.

p. Agency Comments—Federal, state, and local agencies are invited to file comments on the described application. A copy of the application may be obtained by agencies directly from the Applicant. If an agency does not file comments within the time specified for filing comments, it will be presumed to have no comments. One copy of an agency's comments must also be sent to the Applicant's representatives.

Linwood A. Watson, Jr.,

Acting Secretary.

[FR Doc. 01–24544 Filed 10–1–01; 8:45 am]

BILLING CODE 6717–01–P

DEPARTMENT OF ENERGY

Federal Energy Regulatory Commission

Notice of Scoping Meeting and Soliciting Scoping Comments for an Applicant Prepared Environmental Assessment Using the Alternative Licensing Process

September 26, 2001.

a. *Type of Application:* Alternative Licensing Process.

b. *Project No.:* 2100.

c. *Applicant:* Department of Water Resources (DWR).

d. *Name of Project:* Oroville Hydroelectric Project (also known as the Feather River Project).

e. *Location:* On the Feather River, in Butte County, California. The project occupies federal lands within the Plumas and Lassen National Forests.

f. *Filed Pursuant to:* Federal Power Act, 16 U.S.C. 791(a)–825(r).

g. *Applicant Contact:* Rick Ramirez, State Water Project Analysis Office at (916) 653–6408.

h. *FERC Contact:* Jim Fargo, at (202) 219–2848 or james.fargo@ferc.fed.us.

j. *Deadline for filing scoping comments:* November 29, 2001.

All documents (original and eight copies) should be filed with: David P. Boergers, Secretary, Federal Energy Regulatory Commission, 888 First Street, NE., Washington, DC 20426. Scoping comments may be filed electronically via the Internet in lieu of paper. See 18 CFR 385.2001(a)(1)(iii) and the instructions on the Commission's web site (http://www.ferc.gov) under the ''e-Filing'' link.

The Commission's Rules of Practice and Procedure require all interveners filing documents with the Commission to serve a copy of that document on each person on the official service list for the project. Further, if an intervener files comments or documents with the Commission relating to the merits of an issue that may affect the responsibilities of a particular resource agency, they must also serve a copy of the document on that resource agency.

k. The Oroville facilities consist of the existing Oroville Dam and Reservoir, the Edward Hyatt Powerplant, Thermalito Powerplant, Thermalito Diversion Dam Powerplant, Thermalito Forebay and Afterbay, and associated recreational and fish and wildlife facilities. The project has a total installed capacity of 762,000 kilowatts.

1. Scoping Process

DWR is using the Federal Energy Regulatory Commission's (Commission) alternative licensing process (ALP). Under the ALP, DWR will prepare an Applicant Prepared Environmental Assessment (APEA) and license application for the Oroville Hydroelectric Project.

DWR expects to file with the Commission the APEA and the license application for the Oroville Hydroelectric Project by January 2005.

The purpose of this notice is to inform you of the opportunity to participate in the upcoming scoping meetings identified below, and to ask for your scoping comments.

Scoping Meetings

DWR and the Commission staff will hold two scoping meetings, one in the evening and one in the afternoon, to help us identify the scope of issues to be addressed in the APEA.

All interested individuals, organizations, and agencies are invited to attend one or both of the meetings, and to assist the staff in identifying the environmental issues that should be analyzed in the APEA. The times and locations of these meetings are as follows:

Evening Meeting

Monday, October 29, 2001, 6 p.m. to 9 p.m., State Theater, 1498 Myers Street Oroville, California

Afternoon Meeting

Tuesday, October 30, 2001, 1 p.m. to 4 p.m., Secretary of State Building auditorium, 1500 11th Street Sacramento, California

To help focus discussions, Scoping Document 1 was mailed in September 2001, outlining the subject areas to be addressed in the APEA to the parties on the mailing list. Copies of the SD1 also will be available at the scoping meetings. SD1 may also be viewed on the web at http://www.ferc.gov using the ''RIMS'' link—select ''Docket #'' and follow the instructions (call 202–208–2222 for assistance).

Based on all written comments received, a Scoping Document 2 (SD2) may be issued. SD2 will include a revised list of issues, based on the scoping sessions.

Objectives

At the scoping meetings, the DWR and staff will: (1) Summarize the environmental issues tentatively identified for analysis in the APEA; (2) solicit from the meeting participants all available information, especially quantifiable data, on the resources at issue; (3) encourage statements from experts and the public on issues that should be analyzed in the APEA, including viewpoints in opposition to, or in support of, the collaborative's preliminary views; (4) determine the resource issues to be addressed in the APEA; and (5) identify those issues that require a detailed analysis, as well as those issues that do not require a detailed analysis.

Procedures

The meetings will be recorded by a stenographer and will become part of the formal record of the Commission proceeding on the project.

Individuals, organizations, and agencies with environmental expertise and concerns are encouraged to attend the meetings and to assist DWR in defining and clarifying the issues to be addressed in the APEA.

Linwood A. Watson, Jr.,

Acting Secretary.

[FR Doc. 01–24548 Filed 10–1–01; 8:45 am]

BILLING CODE 6717–01–P

DEPARTMENT OF ENERGY

Federal Energy Regulatory Commission

[Project No. 184–065 (California)]

El Dorado Irrigation District; Notice of Public Meeting

September 26, 2001.

The Federal Energy Regulatory Commission (Commission) is reviewing the application for a new license for the El Dorado Project (FERC No. 184), which was filed on February 22, 2000. The El Dorado Project, licensed to the El Dorado Irrigation District (EID), is located on the South Fork American River, in El Dorado, Alpine, and Amador Counties, California. The project occupies lands of the Eldorado National Forest.

The EID, several state and federal agencies, and several non-governmental agencies have agreed to ask the Commission for time to work collaboratively with a facilitator to resolve certain issues relevant to this proceeding. The purpose of this meeting is to finalize and sign the request to the Commission for time to conduct collaborative discussions and to finalize the protocols by which the collaborative group would operate. We invite the participation of all interested governmental agencies, non-governmental organizations, and the general public in this meeting.

The meeting will be held on Tuesday, October 9, 2001, from 9am until 4pm in the Marriott Sacramento, located at 11211 Point East Drive, Rancho Cordova, California.

For further information, please contact Elizabeth Molloy at (202) 208–0771 or John Mudre at (202) 219–1208.

Linwood A. Watson, Jr.,

Acting Secretary.

[FR Doc. 01–24547 Filed 10–1–01; 8:45 am]

BILLING CODE 6717–01–P

ENVIRONMENTAL PROTECTION AGENCY

[FRL–7071–4]

Agency Information Collection Activities: Proposed Collection; Comment Request; Institutional Controls Tracking Systems and Costs Survey

AGENCY: Environmental Protection Agency (EPA).

ACTION: Notice.

SUMMARY: In compliance with the Paperwork Reduction Act (44 U.S.C. 3501 *et seq.*), this document announces that EPA is planning to submit the following proposed Information Collection Request (ICR) to the Office of Management and Budget (OMB): Institutional Controls Tracking Systems and Costs Survey EPA ICR No. 2043.01. Before submitting the ICR to OMB for review and approval, EPA is soliciting comments on specific aspects of the proposed information collection as described below.

DATES: Comments must be submitted on or before December 3, 2001.

ADDRESSES: Comments submitted by regular U.S. Postal Service mail should be sent to: Docket Coordinator, Superfund Docket Office, Mail Code 5201G, U.S. Environmental Protection Agency, Ariel Rios Building, 1200 Pennsylvania Avenue, N.W., Washington, DC 20460. To ensure proper receipt by EPA, it is imperative that you identify docket control identifier IC–SURVEY in the subject line on the first page of your comments. Comments may also be submitted electronically or in person. Please follow the detailed instructions for these submission methods. Interested persons may obtain a copy of the ICR without charge from Michael E. Bellot at the Office of Emergency and Remedial Response, 5/7 Accelerated Response Section (5202G), 1200 Pennsylvania Avenue, N.W., Washington, DC 20460, telephone (703) 603–8905, e-mail bellot.michael@epa.gov, or download off the Internet at *http://www.epa.gov/icr/icr.htm* and refer to EPA ICR No. 2043.01.

FOR FURTHER INFORMATION CONTACT: Michael E. Bellot, telephone (703) 603–8905 or e-mail *bellot.michael@epa.gov.*

SUPPLEMENTARY INFORMATION:

Affected entities: Entities potentially affected by this action are State, Tribal, or local government agencies or organizations that maintain tracking systems, databases, or other information systems that as their primary purpose or incidentally collect and/or track information pertaining to the selection, planning, design, implementation, oversight, monitoring, and/or enforcement of institutional controls at sites or facilities under their jurisdiction.

Title: Institutional Controls Tracking Systems and Costs Survey EPA ICR No. 2043.01.

Abstract: The Office of Emergency and Remedial Response (OERR) is currently researching the development of a system for tracking institutional controls at Superfund sites. Institutional controls are non-engineered site measures such as administrative and/or

legal controls that minimize the potential for exposure to contamination by limiting land or resource use and/or protect the integrity of a remedy. Institutional controls are employed at sites where remedies are not yet in place, are ongoing, and/or leave contaminant residuals on site that do not allow for unlimited use and unrestricted exposure. Proper implementation, monitoring, and enforcement of institutional controls at these sites is critical to EPA's core mission of protecting human health and the environment. Although many of these institutional control mechanisms are necessary parts of the remedy, they are often implemented, monitored, and/or enforced by States, Tribes and/or local governments.

OERR is proposing to complete a study that includes: (1) Conducting research into the types of institutional controls tracking systems that are currently in use and evaluating their relative strengths and weaknesses; (2) developing a focused list of data collection points and definitions; (3) developing and piloting a process for the collection of data to be used to estimate data availability and the cost and time required for data acquisition; (4) developing a data entry process; and (5) researching the feasibility of data sharing and/or linking Federal, State, Tribal and/or local institutional control tracking into a web-based system. In a second phase of this study, OERR is planning to develop the tracking system, establish data linkages, and populate the database. It is anticipated that information on institutional controls eventually will be available to a variety of interested stakeholders over the EPA web page.

This proposed ICR specifies information necessary to determine what types of institutional controls tracking systems are currently in use; their purpose, scope, and structure; the kinds of data they track; their data entry, quality assurance, administration, and access features; data querying capabilities; compatibility with a future EPA system; development, population, and operating costs; and lessons learned from developing, implementing, and operating these systems.

EPA estimates that approximately 52 States, 10 Tribes, and no more than 200 local agencies (planning, zoning, and real estate recording offices) will be surveyed.

If approved by OMB, respondents will have 60 days from receipt of the survey to submit their responses.

In addition to the survey, this proposed ICR includes EPA requests for clarifications, questions and updates to the survey, and agency visits. Clarifications and updates will only be necessary if EPA has follow-up questions regarding responses or if EPA requires more information to understand a tracking system. Up to 50 agencies may be required to submit more detailed descriptions. EPA proposes to visit up to 20 agencies to evaluate institutional controls tracking systems.

Responding to the survey is entirely voluntary. An agency may not conduct or sponsor, and a person is not required to respond to, a collection of information unless it displays a currently valid OMB control number. The OMB control numbers for EPA's regulations are listed in 40 CFR part 9 and 48 CFR Chapter 15.

EPA is soliciting comments to:

(i) Evaluate whether the proposed collection of information is necessary for the proper performance of the functions of the agency, including whether the information will have practical utility;

(ii) evaluate the accuracy of the agency's estimate of the burden of the proposed collection of information, including the validity of the methodology and assumptions used;

(iii) enhance the quality, utility, and clarity of the information to be collected; and

(iv) minimize the burden of the collection of information on those who are to respond, including through the use of appropriate automated electronic, mechanical, or other technological collection techniques or other forms of information technology, e.g., permitting electronic submission of responses.

Burden Statement: Burden means the total time, effort, or financial resources expended by persons to generate, maintain, retain, or disclose or provide information to or for a Federal Agency. This includes the time needed to review instructions; collect, validate, and verify information, process and maintain information, and disclosing and providing information; search data sources; complete and review the collection of information; and transmit or otherwise disclose the information.

The average annual burden imposed by the survey and other information collection efforts are approximated using the following assumptions:

- Approximately half the agencies surveyed will not have an institutional controls tracking system. It is assumed that no more than 30 minutes would be required for these respondents. Each respondent will respond to the survey once. If the response rate is 100 percent, the estimated burden is 66 hours (131 respondents x 0.5 hours).
- Approximately half the remaining agencies will have a rudimentary tracking system or registry. It is assumed that six hours will be required to research and complete the survey and that follow-up contact will take no more than six hours. Each respondent will respond to the survey once. If the response rate is 100 percent, the estimated burden is 792 hours (66 respondents x 12 hours).
- No more than approximately 65 entities will have full systems. It is anticipated that 16 hours will be required to research and complete the survey and eight hours to follow up. Each respondent will respond to the survey once. If the response rate is 100 percent, the estimated burden is 1,560 hours (65 respondents x 24 hours).
- None of the respondents will incur new capital, start-up, operation, maintenance, or purchase of services costs in responding to the survey as the ICR seeks information only about existing activities and practices and does not require respondents to undertake new information collection or tracking tasks.
- The estimated average annual hour burden is 10 hours.

Dated: September 24, 2001.

Elaine F. Davies,

Acting Director, Office of Emergency and Remedial Response, Office of Solid Waste and Emergency Response.

[FR Doc. 01–24600 Filed 10–1–01; 8:45 am]

BILLING CODE 6560–50–P

ENVIRONMENTAL PROTECTION AGENCY

[FRL–7071–2]

Agency Information Collection Activities: Submission for OMB Review; Comment Request; Underground Injection Control (UIC) Program (OMB Control No. 2040–0042; EPA No. 0370.18, Expiring September 30, 2001)

AGENCY: Environmental Protection Agency (EPA).

ACTION: Notice.

SUMMARY: In compliance with the Paperwork Reduction Act (44 U.S.C. 3501 *et seq.*), this notice announces that the following Information Collection Request (ICR) has been forwarded to the Office of Management and Budget (OMB) for review and approval: Underground Injection Control (UIC) Program (OMB Control No. 2040–0042; EPA ICR No. 0370.18), expiring September 30, 2001. The ICR describes the nature of the information collection

and its expected burden and cost; where appropriate, it includes the actual data collection instrument.

DATES: Comments must be submitted on or before November 1, 2001.

ADDRESSES: Send comments referencing EPA ICR No. 0370.18 and OMB Control Number 2040–0042, to the following addresses: Susan Auby, U.S. Environmental Protection Agency, Collection Strategies Divsion (Mail Code 2822), 1200 Pennsylvania Avenue, NW., Washington DC 20460–0001; and to Office of Information and Regulatory Affairs, Office of Management and Budget (OMB), Attention: Desk Officer for EPA, 725 17th Street, NW., Washington, DC 20503.

FOR FURTHER INFORMATION CONTACT: For a copy of the ICR contact auby.susan@epamail.gov, or download off the Internet at *http://www.epa.gov/icr* and refer to EPA ICR No. 0370.18. For technical questions about the ICR contact Robert E. Smith at 202–260–5559 in the Office of Water.

SUPPLEMENTARY INFORMATION:

Title: Underground Injection Control Program (OMB Control No. 2040–0042; EPA ICR No. 0370.18.), expiring September 30, 2001. This is an extension of a previously approved collection.

Abstract: The Underground Injection Control (UIC) Program under the Safe Drinking Water Act established a Federal and State regulatory system to protect underground sources of drinking water (USDWs) from contamination by injected fluids. Owners/operators of underground injection wells must obtain permits, conduct environmental monitoring, maintain records, and report results to EPA or the State UIC primacy agency. States must report to EPA on permittee compliance and related information. The information is reported using standardized forms, and regulations are codified at 40 CFR parts 144 through 148. The data are used to ensure the protection of underground sources of drinking water from UIC authorities. An agency may not conduct or sponsor, and a person is not required to respond to, a collection of information unless it displays a currently valid OMB control number. The OMB control numbers for EPA's regulations are listed in 40 CFR part 9 and 48 CFR Chapter 15. The **Federal Register** document required under 5 CFR 1320.8(d), soliciting comments on this collection of information, was published on May 3, 2001 (66 FR 22225). No comments were received by EPA on or before the close of the comment period.

Burden Statement: The annual public reporting and recordingkeeping burden for this collection of information is estimated to average 2.59 hours per response. Burden means the total time, effort, or financial resources expended by persons to generate, maintain, retain, or disclose or provide information to or for a Federal agency. This includes the time needed to review instructions; develop, acquire, install, and utilize technology and systems for the purposes of collecting, validating, and verifying information, processing and maintaining information, and disclosing and providing information; adjust the existing ways to comply with any previously applicable instructions and requirements; train personnel to be able to respond to a collection of information; search data sources; complete and review the collection of information; and transmit or otherwise disclose the information.

Respondents/Affected Entities: Entities potentially affected by this action are owners and operators of underground injection wells and UIC Primacy agencies in the States including, Puerto Rico, the U.S. Trust Territories, Indian Tribes, and Alaska's Native Villages and, in some instances, U.S. EPA Regional Offices.

Respondents/Affected Entities: 422,287.

Estimated Number of Respondents: 52,967.

Frequency of Response: Operators of Class I, III and some Class V wells must report monitoring results quarterly; Class II operators report annually.

Estimated Total Annual Burden: 1,091,945.

Estimated Total Annualized Cost Burden: $66,904,505.

Send comments on the Agency's need for this information, the accuracy of the provided burden estimates, and any suggested methods for minimizing respondent burden, including through the use of automatic collection techniques to the following addresses. Please refer to EPA ICR No. 0370.18 and OMB Control No. 2040–0042 in any correspondence.

Dated: September 25, 2001.

Oscar Morales,

Director, Collection Strategies Division.

[FR Doc. 01–24592 Filed 10–1–01; 8:45 am]

BILLING CODE 6560–50–M

ENVIRONMENTAL PROTECTION AGENCY

[FRL–7071–1]

Agency Information Collection Activities Submission for OMB Review; Comment Request; Cooperative Agreements and Superfund Response Actions

AGENCY: Environmental Protection Agency (EPA).

ACTION: Notice.

SUMMARY: In compliance with the Paperwork Reduction Act (44 U.S.C. 3501 *et seq.*), this document announces that the following Information Collection Request (ICR) has been forwarded to the Office of Management and Budget (OMB) for review and approval: Cooperative Agreements and Superfund Contracts for Superfund Response Actions, OMB Control Number 2050–0179, expiring September 30, 2001. The ICR describes the nature of the information collection and its expected burden and cost; where appropriate, it includes the actual data collection instrument.

DATES: Comments must be submitted on or before November 1, 2001.

ADDRESSES: Send comments, referencing EPA ICR No. 1487.07 and OMB Control No. 2050–0179, to the following addresses: Sandy Farmer, U.S. Environmental Protection Agency, Collection Strategies Division (Mail Code 2822), 1200 Pennsylvania Avenue, NW, Washington, DC 20460–0001; and to Office of Information and Regulatory Affairs, Office of Management and Budget (OMB), Attention: Desk Officer for EPA, 725 17th Street, NW, Washington, DC 20503.

FOR FURTHER INFORMATION CONTACT: For a copy of the ICR contact Sandy Farmer at EPA by phone at (202) 260–2740, by e-mail at *Farmer.sandy@epa.gov,* or download off the Internet at *http://www.epa.gov/icr* and refer to EPA ICR No. 1487.07. For technical questions about the ICR contact Kirby Biggs at 703–573–8717.

SUPPLEMENTARY INFORMATION:

Title: Cooperative Agreements and Superfund Contracts for Superfund Response Actions, OMB Control number 2050–0179, EPA ICR number 1487.07, expiring September 30, 2001. This is an extension of a currently approved information collection.

Abstract: This ICR authorizes the collection of information under 40 CFR part 35, subpart O, which establishes the administrative requirements for cooperative agreements funded under the Comprehensive Environmental

Response, Compensation, and Liability Act (CERCLA) for State, political subdivisions, and Federally recognized Indian tribal government response actions. This regulation also codifies the administrative requirements for Superfund State Contracts for non-State-lead remedial responses. This regulation includes only those provisions mandated by CERCLA, required by OMB Circulars, or added by EPA to ensure sound and effective financial assistance management. The information is collected from applicants and/or recipients of EPA assistance and is used to make awards, pay recipients, and collect information on how Federal funds are being spent. EPA requires this information to meet its Federal stewardship responsibilities. Recipient responses are required to obtain a benefit (federal funds) under 40 CFR part 31, Uniform Administrative Requirements for Grants and Cooperative Agreements to State and Local Governments' and under 40 CFR part 35, State and Local Assistance.

An agency may not conduct or sponsor, and a person is not required to respond to, a collection of information unless it displays a currently valid OMB control number. The OMB control numbers for EPA's regulations are listed in 40 CFR part 9 and 48 CFR chapter 15. The **Federal Register** document required under 5 CFR 1320.8(d), soliciting comments on this collection of information was published on May 10, 2001 (66 FR 23921); no comments were received.

Burden Statement: The annual public reporting and record keeping burden for this collection of information is estimated to average 8.8 hours per response. Burden means the total time, effort, or financial resources expended by persons to generate, maintain, retain, or disclose or provide information to or for a Federal agency. This includes the time needed to review instructions; develop, acquire, install, and utilize technology and systems for the purposes of collecting, validating, and verifying information, processing and maintaining information, and disclosing and providing information; adjust the existing ways to comply with any previously applicable instructions and requirements; train personnel to be able to respond to a collection of information; search data sources; complete and review the collection of information; and transmit or otherwise disclose the information.

Respondents/Affected Entities: State, Local or Tribal Government.

Estimated Number of Respondents: 581.

Frequency of Response: As needed.

Estimated Total Annual Hour Burden: 5115 hours.

Estimated Total Annualized Capital, O&M Cost Burden: $0.

Send comments on the Agency's need for this information, the accuracy of the provided burden estimates, and any suggested methods for minimizing respondent burden, including through the use of automated collection techniques to the addresses listed above. Please refer to EPA ICR No. 1487.07 and OMB Control No. 2050–0179 in any correspondence.

Dated: September 24, 2001.

Oscar Morales,

Director, Collection Strategies Division.

[FR Doc. 01–24597 Filed 10–1–01; 8:45 am]

BILLING CODE 6560–50–P

ENVIRONMENTAL PROTECTION AGENCY

[FRL–7070–7]

National Environmental Justice Advisory Council; Notice of Charter Renewal

AGENCY: Environmental Protection Agency.

ACTION: Notice of charter renewal.

The Charter for the Environmental Protection Agency's (EPA) National Environmental Justice Advisory Council (NEJAC) will be renewed for an additional two-year period, as a necessary committee which is in the public interest, in accordance with the provisions of the Federal Advisory Committee Act (FACA), 5 U.S.C. App. II section 9(c). The purpose of the NEJAC is to provide advice and recommendations to the Administrator on issues associated with integrating environmental justice concerns into EPA's outreach activities, public policies, science, regulatory, enforcement, and compliance decisions.

It is determined that NEJAC is in the public interest in connection with the performance of duties imposed on the Agency by law.

Inquiries may be directed to Charles Lee, NEJAC Designated Federal Officer, U.S. EPA, (mail code 2201A), 1200 Pennsylvania Avenue, NW., Washington, DC 20460.

Dated: July 18, 2001.

Sylvia K. Lowrance,

Acting Assistant Administrator, Office of Enforcement and Compliance Assurance.

[FR Doc. 01–24601 Filed 10–1–01; 8:45 am]

BILLING CODE 6560–50–P

ENVIRONMENTAL PROTECTION AGENCY

[FRL–7070–9]

Federal Agency Hazardous Waste Compliance Docket

AGENCY: Environmental Protection Agency.

ACTION: Notice of fourteenth update of the Federal Agency Hazardous Waste Compliance Docket, pursuant to CERCLA section 120(c).

SUMMARY: Section 120(c) of the Comprehensive Environmental Response, Compensation, and Liability Act of 1980 (CERCLA), as amended by the Superfund Amendments and Reauthorization Act of 1986 (SARA), requires the Environmental Protection Agency (EPA) to establish a Federal Agency Hazardous Waste Compliance Docket. The docket is to contain certain information about Federal facilities that manage hazardous waste or from which hazardous substances have been or may be released. (As defined by CERCLA section 101(22), a release is any spilling, leaking, pumping, pouring, emitting, emptying, discharging, injecting, escaping, leaching, dumping, or disposing into the environment.) CERCLA requires that the docket be updated every six months, as new facilities are reported to EPA by Federal agencies. The following list identifies the Federal facilities to be included in this fourteenth update of the docket and includes facilities not previously listed on the docket and reported to EPA since the last update of the docket, 65 FR 83222, December 29, 2000, which was current as of August 28, 2000. SARA, as amended by the Defense Authorization Act of 1997, specifies that, for each Federal facility that is included on the docket during an update, evaluation shall be completed in accordance with a reasonable schedule. Such site evaluation activities will help determine whether the facility should be included on the National Priorities List (NPL) and will provide EPA and the public with valuable information about the facility. In addition to the list of additions to the docket, this notice includes a section that comprises revisions (that is, corrections and deletions) of the previous docket list. This update contains eleven additions and twenty-three deletions since the previous update, as well as numerous other corrections to the docket list. At the time of publication of this notice, the new total number of Federal facilities listed on the docket is 2,214.

DATES: This list is current as of May 1, 2001.

FOR FURTHER INFORMATION CONTACT: Electronic versions of the docket may be obtained at *http://www.epa.gov/oeca/fedfac/oversight/oversight.html*.

SUPPLEMENTARY INFORMATION:

Table of Contents

1.0 Introduction
2.0 Revisions of the Previous Docket
3.0 Process for Compiling the Updated Docket
4.0 Facilities Not Included
5.0 Facility Status Reporting
6.0 Information Contained on Docket Listing

1.0 Introduction

Section 120(c) of the Comprehensive Environmental Response, Compensation, and Liability Act of 1980 (CERCLA), 42 United States Code (U.S.C.) 9620(c), as amended by the Superfund Amendments and Reauthorization Act of 1986 (SARA), required the establishment of the Federal Agency Hazardous Waste Compliance Docket. The docket contains information on Federal facilities that is submitted by Federal agencies to the U.S. Environmental Protection Agency (EPA) under sections 3005, 3010, and 3016 of the Resource Conservation and Recovery Act (RCRA), 42 U.S.C. 6925, 6930, and 6937, and under section 103 of CERCLA, 42 U.S.C. 9603. Specifically, RCRA section 3005 establishes a permitting system for certain hazardous waste treatment, storage, and disposal (TSD) facilities; RCRA section 3010 requires waste generators and transporters and TSD facilities to notify EPA of their hazardous waste activities; and RCRA section 3016 requires Federal agencies to submit biennially to EPA an inventory of hazardous waste sites that the Federal agencies own or operate. CERCLA section 103(a) requires that the National Response Center (NRC) be notified of a release. CERCLA section 103(c) requires reporting to EPA the existence of a facility at which hazardous substances are or have been stored, treated, or disposed of and the existence of known or suspected releases of hazardous substances at such facilities.

The docket serves three major purposes: (1) To identify all Federal facilities that must be evaluated to determine whether they pose a risk to human health and the environment sufficient to warrant inclusion on the National Priorities List (NPL); (2) to compile and maintain the information submitted to EPA on such facilities under the provisions listed in section 120(c) of CERCLA; and (3) to provide a mechanism to make the information available to the public.

The initial list of Federal facilities to be included on the docket was published on February 12, 1988 (53 FR 4280). Updates of the docket have been published on November 16, 1988 (54 FR 46364); December 15, 1989 (54 FR 51472); August 22, 1990 (55 FR 34492); September 27, 1991 (56 FR 49328); December 12, 1991 (56 FR 64898); July 17, 1992 (57 FR 31758); February 5, 1993 (58 FR 7298); November 10, 1993 (58 FR 59790); April 11, 1995 (60 FR 18474); June 27, 1997 (62 FR 34779); November 23, 1998 (63 FR 64806); June 12, 2000 (65 FR 36994); and December 29, 2000 (65 FR 83222). This notice constitutes the fourteenth update of the docket.

Today's notice is divided into three sections: (1) Additions, (2) deletions, and (3) corrections. The additions section lists newly identified facilities that have been reported to EPA since the last update and that now are being included on the docket. The deletions section lists facilities that EPA is deleting from the docket. The corrections section lists changes in information about facilities already listed on the docket.

The information submitted to EPA on each Federal facility is maintained in the docket repository located in the EPA Regional office of the Region in which the facility is located (see 53 FR 4280 (February 12, 1988) for a description of the information required under those provisions). Each repository contains the documents submitted to EPA under the reporting provisions and correspondence relevant to the reporting provisions for each facility. Contact the following docket coordinators for information on Regional docket repositories:

Gerardo Mill(à)n-Ramos (HBS), US EPA Region 1, #1 Congress St., Suite 1100, Boston, MA 02114–2023, (617) 918–1377

Helen Shannon (ERRD), US EPA Region 2, 290 Broadway, 18th Floor, New York, NY 10007–1866, (212) 637–4260

Alida Karas (ERRD), US EPA Region 2, 290 Broadway, New York, NY 10007–1866, (212) 637–4276

Cesar Lee (3HS50), US EPA Region 3, 841 Chestnut Bg., Philadelphia, PA 19107, (215) 814–3205

Gena Townsend (42D–FFB), US EPA Region 4, 61 Forsyth St., SW, Atlanta, GA 30303, (404) 562–8538

Laura Ripley (SE–5J), US EPA Region 5, 77 W. Jackson Blvd., Chicago, IL 60604, (312) 886–6040

Philip Ofosu (6SF–RA), US EPA Region 6, 1445 Ross Avenue, Dallas, TX 75202–2733, (214) 665–3178

D. Karla Asberry (FFSC) US EPA Region 7, 726 Minnesota Avenue, Kansas City, KS 66101, (913) 551–7595

Stan Zawistowski (EPR–F), US EPA Region 8, 999 18th Street, Suite 500, Denver, CO 80202–2466, (303) 312–6255

Avonda D. East (SFD–8), US EPA Region 9, 75 Hawthorne Street, San Francisco, CA 94105 (415) 744–2468

Deborah Leblang (ECL–115), US EPA Region 10, 1200 Sixth Avenue, Seattle, WA 98101, (206) 553–0115

Monica Lindeman (ECL, SACU2), US EPA Region 10, 1200 Sixth Avenue, Seattle, WA 98101, (206) 553–5113

2.0 Revisions of the Previous Docket

Following is a discussion of the revisions of the previous docket, including additions, deletions, and corrections.

2.1 Additions

Today, eleven facilities are being added to the docket, primarily because of new information obtained by EPA (for example, recent reporting of a facility pursuant to RCRA sections 3005, 3010, or 3016 or CERCLA section 103). SARA, as amended by the Defense Authorization Act of 1997, specifies that, for each Federal facility that is included on the docket during an update, evaluation shall be completed in accordance with a reasonable schedule.

Of the eleven facilities being added to the docket, none are facilities that have reported to the NRC the release of a reportable quantity (RQ) of a hazardous substance. Under section 103(a) of CERCLA, a facility is required to report to the NRC the release of a hazardous substance in a quantity that equals or exceeds the established RQ. Reports of releases received by the NRC, the U.S. Coast Guard (USCG), and EPA are transmitted electronically to the Transportation Systems Center at the U.S. Department of Transportation (DOT), where they become part of the Emergency Response Notification System (ERNS) database. ERNS is a national computer database and retrieval system that stores information on releases of oil and hazardous substances. Facilities being added to the docket and facilities already listed on the docket for which an ERNS report has been filed are identified by the notation ''103(a)'' in the ''Reporting Mechanism'' column.

It is EPA's policy generally not to list on the docket facilities that are small-quantity generators (SQG) and that have never generated more than 1,000 kilograms (kg) of hazardous waste in

any single month. If a facility has generated more than 1,000 kg of hazardous waste in any single month (that is, if the facility is an episodic generator), it will be added to the docket. In addition, facilities that are SQGs and have reported releases under CERCLA section 103 or hazardous waste activities pursuant to RCRA section 3016 will be listed on the docket and will undergo site evaluation activities, such as a PA and, when appropriate, an SI. All such facilities will be listed on the docket, whether or not they are SQGs pursuant to RCRA. As a result, some of the facilities that EPA is adding to the docket today are SQGs that had not been listed on the docket but that have reported releases or hazardous waste activities to EPA under another reporting provision.

In the process of compiling the documents for the Regional repositories, EPA identified a number of facilities that had previously submitted PA reports, SI reports, Department of Defense (DoD) Installation Restoration Program (IRP) reports, or reports under another Federal agency environmental restoration program, but do not appear to have notified EPA under CERCLA section 103. Section 120(c)(3) of CERCLA requires that EPA include on the docket, among other things, information submitted under section 103. In general, section 103 requires persons in charge of a facility to provide notice of certain releases of hazardous substances. The reports under various Federal agency environmental restoration programs may contain information regarding releases of hazardous substances similar to that provided pursuant to section 103. EPA believes that CERCLA section 120(c) authorizes the agency to include on the docket a facility that has provided information to EPA through documents such as a report under a Federal agency environmental restoration program, regardless of the absence of section 103 reporting. Therefore, some of the facilities that EPA is adding today are being placed on the docket because they have submitted the documents described above that contain reports of releases of hazardous substances.

EPA also includes privately owned, government-operated (POGO) facilities on the docket. CERCLA section 120(c) requires that the docket contain information submitted under RCRA sections 3005, 3010, and 3016 and CERCLA section 103, all of which impose duties on operators as well as owners of facilities. In addition, other subsections of CERCLA section 120 refer to facilities ''owned or operated'' by an agency or other instrumentality of the Federal government. That terminology clearly includes facilities that are operated by the Federal government, even if they are not owned by it. Specifically, CERCLA section 120(e), which sets forth the duties of the Federal agencies after a facility has been listed on the NPL, refers to the Federal agency that ''owns or operates'' the facility. In addition, the primary basis for assigning responsibility for conducting PAs and SIs, as required when a facility is listed on the docket, is Executive Order 12580, which assigns that responsibility to the Federal agency having ''jurisdiction, custody, or control'' over a facility. An operator may be deemed to have jurisdiction, custody, or control over a facility.

2.2 Deletions

Today, twenty-three facilities are being deleted from the docket for various reasons, such as incorrect reporting of hazardous waste activity, change in ownership, and exemption as an SQG under RCRA (40 CFR 262.44). Facilities being deleted no longer will be subject to the requirements of CERCLA section 120(d).

2.3 Corrections

Changes necessary to correct the previous docket were identified by both EPA and Federal agencies. The changes needed varied from simple changes in addresses or spelling to corrections of the recorded name and ownership of a facility. In addition, some changes in the names of facilities were made to establish consistency in the docket. Many new entries are simply corrections of typographical errors. For each facility for which a correction has been entered, the original entry (designated by an ''O''), as it appeared in the February 12, 1988 notice or subsequent updates, is shown directly below the corrected entry (designated by a ''C'') for easy comparison.

3.0 Process for Compiling the Updated Docket

In compiling the newly reported facilities for the update being published today, EPA extracted the names, addresses, and identification numbers of facilities from four EPA databases—ERNS, the Biennial Inventory of Federal Agency Hazardous Waste Activities, the Resource Conservation and Recovery Information System (RCRIS), and the Comprehensive Environmental Response, Compensation, and Liability Information System (CERCLIS)—that contain information about Federal facilities submitted under the four provisions listed in CERCLA section 120(c).

Extensive computer checks compared the current docket list with the information obtained from the databases identified above to determine which facilities were, in fact, newly reported and qualified for inclusion on the update. In spite of the quality assurance efforts EPA has undertaken, state-owned or privately owned facilities that are not operated by the Federal government may have been included. Such problems are caused by procedures historically used to report and track data on Federal facilities; EPA is working to resolve them. Representatives of Federal agencies are asked to write to EPA's docket coordinator at the following address if revisions of this update information are necessary: Augusta K. Wills, Federal Agency Hazardous Waste Compliance Docket Coordinator, Federal Facilities Enforcement Office (Mail Code 2261A), U.S. Environmental Protection Agency, 1200 Pennsylvania Avenue NW., Washington, DC 20004.

4.0 Facilities Not Included

As explained in the preamble to the original docket (53 FR 4280), the docket does not include the following categories of facilities (note, however, that any of these types of facilities may, when appropriate, be listed on the NPL):

- Facilities formerly owned by a Federal agency and now privately owned will not be listed on the docket. However, facilities that are now owned by another Federal agency will remain on the docket and the responsibility for conducting PAs and SIs will rest with the current owner.
- SQGs that have never produced more than 1,000 kg of hazardous waste in any single month and that have not reported releases under CERCLA section 103 or hazardous waste activities under RCRA section 3016 will not be listed on the docket.
- Facilities that are solely transporters, as reported under RCRA section 3010, will not be listed on the docket.

5.0 Facility Status Reporting

EPA has expanded the docket database to include information on the NFRAP status of listed facilities. Indicating NFRAP status allows easy identification of facilities that, after submitting all necessary site assessment information, were found to warrant no further involvement on the part of EPA at the time of the status change. Accordingly, the docket database includes the following facility status codes:

U = Undetermined
N = No further remedial action planned (NFRAP)

NFRAP is a term used in the Superfund site assessment program to identify facilities for which EPA has found that currently available information indicates that listing on the NPL is not likely and further assessment is not appropriate at the time. NFRAP status does not represent an EPA determination that no environmental threats are present at the facility or that no further environmental response action of any kind is necessary. NFRAP status means only that the facility does not appear, from the information available to EPA at this time, to warrant listing on the NPL and that, therefore, EPA anticipates no further involvement by EPA in site assessment or cleanup at the facility. However, additional CERCLA response actions by the Federal agency that owns or operates the facility, whether remedial or removal actions, may be necessary at a facility that has NFRAP status. The status information contained in the docket database is the result of Regional evaluation of information taken directly from CERCLIS. (CERCLIS is a database that helps EPA Headquarters and Regional personnel manage sites, programs, and projects. It contains the official inventory of all CERCLA (NPL and non-NPL) sites and supports all site planning and tracking functions. It also integrates financial data from preremedial, remedial, removal and enforcement programs.) The status information was taken from CERCLIS and sent to the Regional docket coordinators for review. The results of those reviews were incorporated into the status field in the docket database. Subsequently, an updated list of facilities having NFRAP status (those for which an ''N'' appears in the status field) was generated; the list of updates since the previous publication of the docket is being published today.

Important limitations apply to the list of facilities that have NFRAP status. First, the information is accurate only as of May 1, 2001. Second, a facility's status may change at any time because of any number of factors, including new site information or changing EPA policies. Finally, the list of facilities that have NFRAP status is based on Regional review of CERCLIS data, is provided for information purposes only, and should not be considered binding upon either the Federal agency responsible for the facility or EPA.

The status information in the docket database will be reviewed and a new list of facilities classified as NFRAP will be published at each docket update.

6.0 Information Contained on Docket Listing

As discussed above, the update information below is divided into three separate sections. The first section is a list of new facilities that are being added to the docket. The second section is a list of facilities that are being deleted from the docket. The third section comprises corrections of information included on the docket. Each facility listed for the update has been assigned a code(s) that indicates a more specific reason(s) for the addition, deletion, or correction. The code key precedes the lists.

SARA, as amended by the Defense Authorization Act of 1997, specifies that, for each Federal facility that is included on the docket during an update, evaluation shall be completed in accordance with a reasonable schedule. Therefore, all facilities on the additions list to this fourteenth docket update must submit a PA and, if warranted, an SI to EPA. The PA must include existing information about a site and its surrounding environment, including a thorough examination of human, food-chain, and environmental targets, potential waste sources, and migration pathways. From information in the PA or other information coming to EPA's attention, EPA will determine whether a follow-up SI is required. An SI augments the data collected in a PA. An SI may reflect sampling and other field data that are used to determine whether further action or investigation is appropriate. This policy includes any facility for which there is a change in the identity of the responsible Federal agency. The reports should be submitted to the Federal facilities coordinator in the appropriate EPA Regional office.

The facilities listed in each section are organized by state and then grouped alphabetically within each state by the Federal agency responsible for the facility. Under each state heading is listed the name and address of the facility, the Federal agency responsible for the facility, the statutory provision(s) under which the facility was reported to EPA, and the correction code(s).

The statutory provisions under which a facility reported are listed in a column titled ''Reporting Mechanism.'' Applicable mechanisms are listed for each facility: for example 3010, 3016, and 103(c).

The complete list of Federal facilities that now make up the docket and the complete list of facilities classified as no further remedial action planned (NFRAP) are not being published today. However, the lists are available to interested parties and can be obtained at *http://www.epa.gov/oeca/fedfac/oversight/oversight.html* or by calling the HQ Docket Coordinator at (202) 564–2468. As of today, the total number of Federal facilities that appear on the docket is 2,214.

Dated: September 26, 2001.

Craig E. Hooks,

Director, Federal Facilities Enforcement Office.

Docket Revisions

Categories of Revisions for Docket Update by Correction Code

Categories for Deletion of Facilities

(1) Small-Quantity Generator
(2) Not Federally Owned
(3) Formerly Federally Owned
(4) No Hazardous Waste Generated
(5) (This correction code is no longer used.)
(6) Redundant Listing/Site on Facility
(7) Combining Sites Into One Facility/Entries Combined
(8) Does Not Fit Facility Definition
(9) (This correction code is no longer used.)
(10) (This correction code is no longer used.)
(11) (This correction code is no longer used.)
(12) (This correction code is no longer used.)
(13) (This correction code is no longer used.)
(14) (This correction code is no longer used.)

Categories for Addition of Facilities

(15) Small-Quantity Generator With Either a RCRA 3016 or CERCLA 103 Reporting Mechanism
(16) One Entry Being Split Into Two/Federal Agency Responsibility Being Split
(17) New Information Obtained Showing That Facility Should Be Included
(18) Facility Was a Site on a Facility That Was Disbanded; Now a Separate Facility
(19) Sites Were Combined Into One Facility
(19A) New Facility

Categories for Corrections of Information About Facilities

(20) Reporting Provisions Change
(20A) Typo Correction/Name Change/Address Change
(21) Changing Responsible Federal Agency (New Responsible Federal Agency Must Submit proof of previously performed PA, which is subject to approval by EPA)
(22) Changing Responsible Federal Agency and Facility Name (New Responsible Federal Agency Must

Submit proof of previously performed PA, which is subject to approval by EPA)

(23) New Reporting Mechanism Added at Update

(24) Reporting Mechanism Determined to Be Not Applicable After Review of Regional Files

Note: Further information on definitions of categories can be obtained by calling the HQ Docket Coordinator at (202) 564–2468.

FEDERAL AGENCY HAZARDOUS WASTE COMPLIANCE DOCKET UPDATE #14 ADDITIONS

Facility name	Facility address	City	State	ZIP	Agency	Reporting mechanism	Addition code
ALASKA TOK FUEL TERMINAL	7 MI W OF TAK ALASKA HWY 2	TOK	AK	99780	ARMY	3010	19A
USARMY PARKS R F T A	5TH ST BLDG. 790	DUBLIN	CA	94568–5201	ARMY	3010	19A
FORMER LOWRY AFB TITAN MISSILE SITE 1 COMPLEX 2A.	5 MILES SOUTH OF EAST QUINCY AV AND.	AURORA	CO	80137	AIR FORCE	103c	19A
ATLAS ''E'' MISSILE SITE #10	3½ MILES NORTHWEST OF BRIGGSDALE.	BRIGGS DALE	CO	80611	AIR FORCE	103c	19A
NATIONAL GUARD STONE'S RANCH MILITARY RESERVATION.	ROUTE 1 (BOSTON POST ROAD) AND STONE'S RANCH ROAD.	EAST LYME	CT		ARMY	103c	19A
ST LOUIS (EX) ORDNANCE PLANT.	4300 GOODFELLOW BLVD	ST LOUIS	MO	63120	ARMY	103c	19A
FWS–BOZEMAN FISH TECH CENTER.	4050 BRIDGER CANYON ROAD	BOZEMAN	MT	59715–4050	INTERIOR	3010	19A
ARMY AVIATION SUPPORT FACILITY.	624 MUNICIPAL AIRPORT	LINCOLN	NE	68524	ARMY	103c	17
DESCHUTES NF: DELL SPRINGS FORMER FS WORK CAMP.	11 AIR MI WNW OF CRESCENT T23S R7E S35 SW SE.	CRESCENT	OR	97733	AGRICULTURE	103c	19A
BLM–GLASS BUTTES RETORTS	3 MI S OF MILEPOST 82 OFF HWY 20, 20 MI SE OF HAMPTON, T 23 S, R 23 E.	BROTHERS	OR	97712	INTERIOR	103a	19A
BLM–RAWLINGS LANDFILL	P.O. BOX 953	RAWLINS	WY	82301	INTERIOR	103c	19A

FEDERAL AGENCY HAZARDOUS WASTE COMPLIANCE DOCKET UPDATE #14 DELETIONS

Facility name	Facility address	City	State	ZIP	Agency	Reporting mechanism	Code
NEAL SMITH PROPERTY	RT #1	ASHDOWN	AR	71822		3016	2
928TH TACTICAL UNIT	CHICAGO O'HARE AIRPORT	CHICAGO	IL	60666	AIR FORCE	3010, 3016, 103a.	2
TALLEY DEFENSE SYSTEMS JAAPGP64	6 MILES S OF ELWOOD OFF RT 53.	ELWOOD	IL	60421	DEFENSE	3010, 3005	6
LAKESHORE TERMINAL COMPANY, HARRISVILLE DFSP.	US HWY 23	HARRISVILLE	MI	48740	DEFENSE	103c, 3010	2
BAY CITY CERT SITE	9TH ST & 18TH ST W OF SAGINAW ST & WATER ST.	BAY CITY	MI	48708	EPA	3010	3
ELECTRO VOICE	600 CECIL ST	BUCHANAN	MI	49107	EPA	3010	2
DETROIT POSTAL SERVICE	1365 W FORT ST	DETROIT	MI	48233	POSTAL SERVICE	3010	1
HIGHLAND PARK POST OFFICE	13215 WOODWARD	HIGHLAND PARK.	MI	48203	POSTAL SERVICE	3010	4
ROSEVILLE POST OFFICE	30550 GRATIOT AVE	ROSEVILLE	MI	48066	POSTAL SERVICE	3010	1
YELLOW CREEK PRODUCTION FACILITY.	1 NASA DRIVE	IUKA	MS	38852	NASA	103c, 3010, 3005.	2
CARLSBAD WASTE ISOLATION PLANT.	PO BOX 207	CARLSBAD	NM		ENERGY	103a	7
BR–MONTEREY CONSTRUCTION COMPANY.	12 MI. N OF CARLSBAD OFF HWY 285.	CARLSBAD	NM	88220	INTERIOR	3010, 103c	2
BAINBRIDGE SITE	504 RESERVOIR RD	BAINBRIDGE	OH	45612	CORPS OF ENGINEERS, CIVIL.	3010	1
WEST FORK LAKE BRIDGE	BRIDGE AT WEST FORK LAKE	CINCINNATI	OH	45240	CORPS OF ENGINEERS, CIVIL.	3010	4
DELAWARE SITE	3920 US 23 NORTH	DELAWARE	OH	43015	CORPS OF ENGINEERS, CIVIL.	3010	1
MARIETTA SITE	OHIO AND POST ST	MARIETTA	OH	45740	CORPS OF ENGINEERS, CIVIL.	3010	1
MOUNT STERLING SITE	21897 DEER CREEK LAKE	MT STERLING	OH	43143	CORPS OF ENGINEERS, CIVIL.	3010	1
CAESAR CREEK LAKE BRIDGE	BRIDGE AT CAESAR CREEK LAKE.	WAYNESVILLE	OH	45068	CORPS OF ENGINEERS, CIVIL.	3010	1
ZANESVILLE SITE	4969 DILLON DAM RD	ZANESVILLE	OH	43701	CORPS OF ENGINEERS, CIVIL.	3010	1
LONE MOUNTAIN POLLUTION CONTROL FACILITY.	JUNCTION HWY 281 & 412	WAYNOKA	OK			103a	2
SPATZ AIRBASE	902 CARTER	HONDO	TX	78861	CORPS OF ENGINEERS, CIVIL.	3010	2
PERRIN AIR FORCE BASE	GRAYON CNTY	SHERMAN	TX	75090	AIR FORCE	103c	2
OFF–SPECIFICATION FERTILIZER SITE.	RURAL WALKER COUNTY		TX			103c	2

FEDERAL AGENCY HAZARDOUS WASTE COMPLIANCE DOCKET UPDATE #14 CORRECTIONS

	Facility name	Facility address	City	State	ZIP	Agency	Reporting mechanism	Correction code
c	ANNISTON ARMY DEPOT	7 FRANKFORD AVENUE	ANNISTON	AL	36201–4199	ARMY	3005, 3010, 3016, 3103C.	20A
o	ANNISTON ARMY DEPOT	SDSAN–DS–FE	ANNISTON	AL	36201–5080	ARMY	3005, 3010, 3016, 103c	
c	BLM–TANACROSS AIRFIELD.	1 MI S OF TANACROSS ON AK HWY 63° 22′00″ N, 143° 20′ 00″ W.	TANACROSS	AK	99776	INTERIOR	103c	20A
o	BLM–TANACROSS AIRFIELD.	63D22MOOS2	TANACROSS	AK	99776	INTERIOR	103C	
c	LUKE AIR FORCE RANGE	BOUNDED BY I–8 & MEXICAN BORDER.	GILA BEND	AZ	85337	AIR FORCE	3005, 3010, 3016, 103c.	20a
o	LUKE AIR FORCE BASE	832 CSG/DE	LUKE AIR FORCE BASE.	AZ	85309	AIR FORCE	3005, 3010, 3016, 103c	
c	MARCH AIR FORCE BASE	OLDB MARCH 3430 BUNDY AVENUE.	MARCH AFB	CA	92518–1504	AIR FORCE	3005, 3010, 3016, 103c, 103a.	20A
o	MARCH AIR FORCE BASE	22CSG/CC	MARCH AFB	CA	92518	AIR FORCE	3005, 3010, 3016, 103c, 103a	
c	SHAVER LAKE LANDFILL	DINKEY CREEK ROAD	SHAVER LAKE	CA	93664	AGRICULTURE	103c	21
o	SHAVER LAKE LANDFILL	DINKEY CREEK ROAD	SHAVER LAKE	CA	93664	INTERIOR	103c	
c	SISKON MINE	T14N, R5E, SECS. 20–29	SOMES BAR	CA	95568	AGRICULTURE	103c	21
o	SISKON MINE	T14N, R5E, SECS. 20–29	SOMES BAR	CA	95568	INTERIOR	103c	
c	HERLONG MUNITIONS	705 HALL STREET	SUSANVILLE	CA	96130	DEFENSE	3016	21
o	HERLONG MUNITIONS	705 HALL STREET	SUSANVILLE	CA	96130	INTERIOR	3016	
c	USNASA BOEING SSFL AREA II.	SANTA SUSANA FIELD LAB NASA.	SIMI HILLS	CA	91311	NASA	3005, 3010, 3016, 103c.	20A
o	ROCKWELL INTERNATIONAL-ROCKETDYNE DIV (NASA).	WOOLSEY CANYON RD.	SIMI HILLS	CA	93063	NASA	3005, 3010, 3016, 103c	
c	NAVAL AIR WEAPONS STATION CHINA LAKE.	1 ADMINISTRATION CIRCLE.	CHINA LAKE	CA	93555–6001	NAVY	3005, 3010, 3016, 103c.	20A
o	CHINA LAKE NAVAL WEAPONS STATION.	CODE 2632	CHINA LAKE	CA	93555	NAVY	3005, 3010, 3016, 103c.	
c	HQ FORT CARSON 7TH ID DECAM.	801 TEVIS STREET BLDG. 302.	FORT CARSON	CO	80913–4000	ARMY	3005, 3010, 3016, 103c.	20A
o	FORT CARSON	DFAE BLDG. 304, AFZC–FE–EQ.	FT. CARSON	CO	80913	ARMY	3005, 3010, 3016, 103c.	
c	PUEBLO CHEMICAL DEPOT.	45825 HWY 96 EAST	PUEBLO	CO	81006–9330	ARMY	3005, 3010, 3016, 103c.	20A
o	PUEBLO ARMY DEPOT	I–50, 13 MI. E. OF PUEBLO	PUEBLO	CO	81002	ARMY	3005, 3010, 3016, 103c	
c	WASHINGTON, HEADQUARTERS.	600 INDEPENDENCE AVE SW.	WASHINGTON	DC	20546	GENERAL SERVICES ADMINISTRATION.	3010	21
o	WASHINGTON, HEADQUARTERS.	600 INDEPENDENCE AVE SW.	WASHINGTON	DC	20546	NASA	3010	
c	WASHINGTON NAVY YARD.	1014 N STREET SE SUITE 3207.	WASHINGTON	DC	20374–5001	NAVY	3010, 103c, 3016.	20A
o	WASHINGTON NAVY YARD.	7TH & M STREETS, S.W.	WASHINGTON	DC	20374	NAVY	3010, 103c, 3016	
c	ROBINS AIR FORCE BASE	455 BYRON STREET, SUITE 465.	ROBINS AFB	GA	31098–1860	AIR FORCE	3005, 3010, 3016, 103c, 103a.	20A
o	ROBINS AIR FORCE BASE	WR–ALC/EM	WARNER ROBINS BASE.	GA	31098	AIR FORCE	3005, 3010, 3016, 103c, 103a	
c	NAVAL AIR STATION WHITING FIELD.	7550 USS ESSEX STREET SUITE 200.	MILTON	FL	32570–6155	NAVY	3010, 103c	20A
o	WHITING FIELD NAVAL AIR STATION.	FL HWY 87 A	MILTON	FL	32570	NAVY	3010, 103c	
c	IDAHO NATIONAL ENGINEERING AND ENVIRONMENTAL LABORATORY.	US HWY 20/26, 40 MI WEST OF IDAHO FALLS.	SCOVILLE	ID	83401	ENERGY	3005, 3010, 3016, 103c, 103a.	20A

FEDERAL AGENCY HAZARDOUS WASTE COMPLIANCE DOCKET UPDATE #14 CORRECTIONS—Continued

	Facility name	Facility address	City	State	ZIP	Agency	Reporting mechanism	Correction code
o	IDAHO NATIONAL ENGINEERING LABORATORY.	US HWY 20/26, 40 MI WEST OF IDAHO FALLS.	SCOVILLE	ID	83401	ENERGY	3005, 3010, 3016, 103c, 103a	
c	BLM–COURIER GULCH	0.3 MI N OF CITY, T4N R18E S25 NE¼ SW¼.	TRIUMPH	ID	83333	INTERIOR	3010, 103c	20, 20A
o	BLM–COURIER GULCH	0.3 MI N OF CITY	TRIUMPH	ID	83333	INTERIOR	103c	
c	CHANUTE AIR FORCE BASE.	OL–B AFBCA 1 AVIATION CENTER DRIVE, SUITE 101.	RANTOUL	IL	61866	AIR FORCE	3005, 3010, 3016, 103c.	20A
o	CHANUTE AIR FORCE BASE.	3345 ABG/DE	RANTOUL	IL	61868	AIR FORCE	3005, 3010, 3016, 103c	
c	AURORA POST OFFICE SITE (NEW).	N BROADWAY (RT. 25) AND INDIANA CIRCLE.	AURORA	IL	60505	POSTAL SERVICE	103c	20A
o	AURORA POST OFFICE	N BROADWAY (RT. 25) AND INDIANA CIRCLE.	AURORA	IL	60505	POSTAL SERVICE	103c	
c	US GSA FPRS CASAD DEPOT.	STATE RT. 14	NEW HAVEN	IN	46744	DEFENSE LOGISTICS AGENCY.	3010, 301c	20A
o	NEW HAVEN DEFENSE LOGISTICS AGENCY DEPOT.	STATE RT. 14	NEW HAVEN	IN	46744	DEFENSE LOGISTICS AGENCY.	3010, 103c	
c	US ARMY COMBINED ARMS CENTER.	853 W WAREHOUSE	FORT LEAVENWORTH.	KS	66027	ARMY	3005, 3010, 3016, 103c.	20A
o	COMBINED ARMS CENTER & FORT LEAVENWORTH.	FT. LEAVENWORTH RESERVATION DEH–BLDG 85.	FT. LEAVENWORTH.	KS	66027	ARMY	3005, 3010, 3016, 103c	
c	HQ. 101ST AIRBORNE DIV. (AASLT) FT. CAMPBELL.	HWY 41–A N AT STATE LINE.	FORT CAMPBELL	KY	42223	ARMY	3005, 3010, 3016, 103c.	20A
o	HQ. 101ST AIRBORNE DIV. (AASLT) FT. CAMPBELL.	ATTN AFZB–DPW–E–P	FORT CAMPBELL	KY	42223	ARMY	3005, 3010, 3016, 103c	
c	USAARMC & FORT KNOX	US HWY 31 WEST	FORT KNOX	KY	40121	ARMY	3005, 3010, 3016, 103a, 103c.	20A
o	USAARMC & FORT KNOX	US HWY 32 WEST	FORT KNOX	KY	40121	ARMY	3005, 3010, 3016, 103a, 103c	
c	USPFO FOR KENTUCKY	120 MINUTEMAN PKWY (BLDG120).	FRANKFORT	KY	40601–6192	ARMY	3010, 103c	20A
o	USPFO FOR KENTUCKY	BOONE NATIONAL GUARD CENTER, P*.	FRANKFORT	KY	40601	ARMY	3010, 103c	
c	BLUE GRASS ARMY DEPOT, RICHMOND.	2091 KINGSTON HWY	RICHMOND	KY	40475	ARMY	3005, 103c, 3010.	20A
o	LEXINGTON BLUEGRASS DEPOT ACTIVITY.	US HWY 421	RICHMOND	KY	40475	ARMY	3005, 103c, 3010	
c	ENGLAND AIR FORCE BASE.	1719 CHAPPIE JAMES	ALEXANDRIA	LA	71303	AIR FORCE	3005, 3010, 3016, 103c.	20A
o	ENGLAND AIR FORCE BASE.	23 CSG/DE	ENGLAND AFB	LA	71311	AIR FORCE	3005, 3010, 3016, 103c	
c	NAVAL AIR STATION PATUXENT RIVER.	22268 CEDAR POINT ROAD.	PATUXENT RIVER.	MD	20670–5409	NAVY	3005, 3010, 3016, 103c, 103a.	20A
o	PATUXENT RIVER NAVAL AIR STATION.	NE OF ROUTE 235	PATUXENT RIVER.	MD	20670	NAVY	3005, 3010, 3016, 103c, 103a	
c	LT JOHN A. FERRA US ARMY RESERVE CENTER.	NORTH ST	DANVERS	MA	01923	ARMY	103c	20A
o	DANVERS ARMY RESERVE CENTER.	NORTH ST	DANVERS	MA	01923	ARMY	103c	
c	NAVAL AIR STATION BRUNSWICK.	1251 ORION STREET	BRUNSWICK	ME	04011–5009	NAVY	3005, 3010, 3016, 103c, 103a.	20A
o	BRUNSWICK NAVAL AIR STATION.	BOUNDED BY ROUTES 24 & 123.	BRUNSWICK	ME	04011	NAVY	3005, 3010, 3016, 103c, 103a	

FEDERAL AGENCY HAZARDOUS WASTE COMPLIANCE DOCKET UPDATE #14 CORRECTIONS—Continued

	Facility name	Facility address	City	State	ZIP	Agency	Reporting mechanism	Correction code
c	PHELPS/COLLINS ANG BASE.	AIRPORT ROAD	ALPENA	MI	49704	AIR FORCE	3010, 3016, 103a, 103c.	20A
o	PHELPS/COLLINS AIRPORT.	AIRPORT ROAD	ALPENA	MI	49707	AIR FORCE	3010, 3016, 103a, 103c	
c	BIA–SHAKOPEE DUMP	SECTION 1 T115N R23W	SHAKOPEE	MN	55379	INTERIOR	103c	20A
o	BIA–SHAKOPEE DUMP	T115NR23W	SHAKOPEE	MN		INTERIOR	103c	
c	MINOT AIR FORCE BASE	5 CES CE 320 PEACEKEEPER PLACE.	MINOT AIR FORCE BASE.	ND	58705–5006	AIR FORCE	3005, 3010, 3016, 103c.	20A
o	MINOR AIR FORCE BASE	41 CSG/CC	MINOT AFB	ND	58705	AIR FORCE	3005, 3010, 3016, 103c	
c	WASTE ISOLATION PILOT PLANT.	30 MILES E OF CARLSBAD/JAL HWY.	CARLSBAD	NM	88221	ENERGY	3005, 3010, 103a, 3016.	23
o	WASTE ISOLATION PILOT PLANT.	30 MILES E OF CARLSBAD/JAL HWY.	CARLSBAD	NM	88221	ENERGY	3016	
c	GLENN RESEARCH CENTER AT LEWIS FIELD.	6100 BROOKPARK ROAD	CLEVELAND	OH	44135	NASA	3010, 3016, 103a, 103c.	20A
o	LEWIS RESEARCH CENTER CLEVELAND.	2100 BROOKPARK ROAD	CLEVELAND	OH	44135	NASA	3010, 3016, 103a, 103c	
c	MCALESTER ARMY AMMUNITION PLANT.	1 C TREE RD	MCALESTER	OK	74501–9002	ARMY	3005, 3010, 3016, 103c.	20A
o	MCALESTER ARMY AMMUNITION PARK.	HIGHWAY 69	MCALESTER	OK	74501	ARMY	3005, 3010, 3016, 103c	
c	NORTH PACIFIC DIVISION MATERIALS LABORATORY.	1491 NW GRAHAM AVE	TROUTDALE	OR	97060	CORPS OF ENGINEERS, CIVIL.	3010, 103c	20A
o	NORTH PACIFIC DIVISION MATERIALS LABORATORY.	1491 NW GRAHAM AVE	TROUTDALE	OR	97050	CORPS OF ENGINEERS, CIVIL.	3010, 103c	
c	FWS–SACHUEST POINT NATIONAL WILDLIFE REFUGE.	P.O. BOX 307	MIDDLETOWN	RI	02813	INTERIOR	103c	20A
o	FWS–SACHUEST POINT NATIONAL WILDLIFE REFUGE.	P.O. BOX 307	CHARLESTOWN	RI	02813	INTERIOR	103c	
c	NAVAL SUPPORT ACTIVITY MID-SOUTH (BRAC NAS MEMPHIS).	5722 INTEGRITY DRIVE	MILLINGTON	TN	38054–5045	NAVY	3005, 3010, 3016, 103c,103a.	20A
o	MEMPHIS NAVAL AIR STATION.	MILLINGTON–ARLINGTON ROAD.	MILLINGTON	TN	38054	NAVY	3005, 3010, 3016, 103c, 103a	
c	US NAVY SOUTHNAVFACENGCOM (BRAC NAS DALLAS).	8100 W JEFFERSON AVENUE.	DALLAS	TX	75211	NAVY	3005, 3010, 3016, 103c.	20A
o	DALLAS NAVAL AIR STATION.	JEFFERSON AVENUE	GRAND PRAIRIE	TX	75222	NAVY	3005, 3010, 3016, 103c	
c	VERMONT AIR NATIONAL GUARD.	10 FALCON STREET, SUITE A.	SOUTH BURLINGTON.	VT	05403–5873	AIR FORCE	3010, 103c, 3016.	20A
o	VERMONT AIR NATIONAL GUARD.	BURLINGTON IAP	BURLINGTON	VT	05401	AIR FORCE	3010, 103c, 3016	
c	US ARMY ENGINEERING CENTER FORT BELVOIR.	9430 JACKSON LOOP	FORT BELVOIR	VA	22060–5130	ARMY	3005, 3010, 3016, 103c.	20A
o	FORT BELVOIR	ATZA–DEH–EN BLDG 1442, WILLIAMS HALL.	FORT BELVOIR	VA	22060–5113	ARMY	3005, 3010, 3016, 103c	
c	MARINE CORPS COMBAT DEVELOPMENT COMMAND QUANTICO.	3250 CATLIN AVENUE	QUANTICO	VA	22134–5001	NAVY	3005, 3010, 3016, 103c.	20A
o	QUANTICO MARINE CORPS COMBAT DEVELOPMENT CENTER.	N/A	QUANTICO	VA	22134–5001	NAVY	3005, 3010, 3016, 103c	
c	FS–OKANOGAN–WENATCHEE NF:. LOWER WINTHROP COMPOUND.	19284 HWY 20, 300 FT W OF DOWNTOWN. WINTHROP	WINTHROP	WA	98862	AGRICULTURE	103c	20A

FEDERAL AGENCY HAZARDOUS WASTE COMPLIANCE DOCKET UPDATE #14 CORRECTIONS—Continued

	Facility name	Facility address	City	State	ZIP	Agency	Reporting mechanism	Correction code
o	FS–OKANOGAN–WENATCHEE NF: WINTHROP LOWER COMPOUND.	HWY 20, 300 FT W OF DOWNTOWN WINTHROP.	WINTHROP	WA	98862	AGRICULTURE	103c	
c	FS–OKANOGAN–WENATCHEE NF: NORTH CASCADES SMOKEJUMPER BASE.	23 INTERCITY AIRPORT RD, 3 MI SE OF WINTHROP.	WINTHROP	WA	98862	AGRICULTURE	103c	20A
o	FS–OKANOGAN–WENATCHEE NF: NORTH CASCADES SMOKE JUMPER BASE.	23 INTERCITY AIRPORT RD 5 MI N OF TWISP.	TWISP	WA	98862	AGRICULTURE	103c	
c	BLACKWELL SANITARY LANDFILL/NICOLET NATIONAL FOREST.	SECTION 11 T35N R15E	BLACKWELL	WI	54541	AGRICULTURE	103c, 103a, 3016.	20A
o	NICOLET NF: LAONA SANITARY LANDFILL.	SECTION 11 T35N R15E	BLACKWELL	WI	54541	AGRICULTURE	103c, 103a, 3016	
c	VANCOUVER NATIONAL GUARD BARRACKS.	HQ. VANCOUVER BARRACKS B–638.	VANCOUVER	WA	98661	ARMY	3010, 3016, 103c.	20
o	VANCOUVER NATIONAL GUARD BARRACKS.	HQ. VANCOUVER BARRACKS B–638.	VANCOUVER	WA	98661	ARMY	3016, 103c	
c	YAKIMA FIRING CENTER	I–82, 4 MI N OF CITY	YAKIMA	WA	98901	ARMY	3005, 3010, 3016, 103c.	20A
o	YAKIMA FIRING CENTER	182 4 MI N OF CITY	YAKIMA	WA	98901	ARMY	3005, 3010, 3016, 103c	
c	CAMP WESLEY HARRIS MARINE FACILITY.	SEABECK HWY 3 MI W OF CY.	BREMERTON	WA	98310	NAVY	3010, 103c	20
o	CAMP WESLEY HARRIS MARINE FACILITY.	SEABECK HWY 3 MI W OF CY.	BREMERTON	WA	98310	NAVY	103c	
c	JACKSON PARK HOUSING COMPLEX.	AUSTIN DRIVE AT SHORE DRIVE.	BREMERTON	WA	98312	NAVY	3010, 3016, 103c.	20A
o	JACKSON PARK HOUSING	AUSTIN DRIVE AT SHORE DRIVE.	BREMERTON	WA	98312	NAVY	3010, 3016, 103c	
c	PUGET SOUND NAVAL SHIPYARD.	1ST STREET CODE 106	BREMERTON	WA	98314–5000	NAVY	3005, 3010, 3016, 103c, 103a.	20A
o	PUGET SOUND NAVAL SHIPYARD.	1ST STREET CODE 106	BREMERTON	WA	98314	NAVY	3005, 3010, 3016, 103c, 103a	
c	NAVAL UNDERSEA WARFARE ENGINEERING STATION (4 AREAS).	HWY 308, E END	KEYPORT	WA	98345	NAVY	3005, 3010, 3016, 103c, 103a.	20A
o	KEYPORT NAVAL UNDERSEA WARFARE ENG STATION.	HWY 306, E END	KEYPORT	WA	98345	NAVY	3005, 3010, 3016, 103c, 103a	

FEDERAL AGENCY HAZARDOUS WASTE COMPLIANCE DOCKET NFRAP STATUS FACILITIES UPDATE

Facility name	Facility address	City	State	Zip	Agency	Reporting mechanism
EAKER AIR FORCE BASE	97 CSG/DEEV	EAKER AFB	AR	72315–5000	AIR FORCE	3005 3010 3016 103c
PINE BLUFF ARSENAL	HIGHWAY 65	PINE BLUFF	AR	71602	ARMY	3005 3010 3016 103c 103a
FDA NATIONAL CENTER FOR TOXICOLOGICAL RESEARCH.	3900 NCTR RD	JEFFERSON	AR	72079	HEALTH AND HUMAN SERVICES.	3010
BLM-KAISER EAGLE MOUNTAIN	N OF HWY 10 8M OFF KAISER RD	DESERT CENTER	CA	92239	INTERIOR	103c
IDAHO SPRINGS MERCURY SITE	T35 R73W S36	IDAHO SPRINGS	CO	80452	INTERIOR	3016 103c
CLAIBORN RANGE, ENGLAND AIR FORCE BASE.	LA HWY 488 13M SW OF ALEXANDRIA.	ALEXANDRIA	LA	71301	AGRICULTURE	3010
MARTIN MARIETTA AEROSPACE	13800 OLD GENTILLY ROAD	NEW ORLEANS	LA	70129	NASA	3005 3010 3016 103c
BIA-SHAKOPEE DUMP	SECTION 1 T115N R23W	SHAKOPEE	MN	55379	INTERIOR	103c
CONSTRUCTION BATTALION CENTER GULFPORT.	5200 CBC 2ND STREET	GULFPORT	MS	39501	NAVY	3010 103c 103a
BLM-DUVAL CORPORATION	20 MILES EAST OF CARLSBAD	CARLSBAD	NM	88220	INTERIOR	103c 3016
BLM-I&W HOT OIL SERVICE	T17S, R31E, SEC21	LOCO HILLS	NM	87415	INTERIOR	103c 3016
BLM-MARATHON OIL CO., INDIAN BASIN PLANT.			NM		INTERIOR	103c

FEDERAL AGENCY HAZARDOUS WASTE COMPLIANCE DOCKET NFRAP STATUS FACILITIES UPDATE—Continued

Facility name	Facility address	City	State	Zip	Agency	Reporting mechanism
BLM-TRUTH OR CONSEQUENCES LANDFILL.	T13SR4WSEC22NMPH	TRUTH OR CONSEQUENCES.	NM		INTERIOR	103c 3016
AMERICAN ANTIMONY CORPORATION.	T 26N R. 34E SECTION 28	LOVELOCK	NV	89419	INTERIOR	103c
INDIAN SPRINGS LANDFILL		CLARK COUNTY	NV		INTERIOR	103c
NIAGARA STATION		YOUNGSTOWN	NY	14174	GENERAL SERVICES ADMINISTRATION.	103c
PLANT #3 (MCDONNELL-DOUGLAS CORP).	2000 N. MEMORIAL AVENUE	TULSA	OK	74101	AIR FORCE	3005 3010 3016 103c
BIA-CADDO COUNTY LANDFILL #2	S2 SE4 SEC4 T7N R13W	CARNEGIE	OK		INTERIOR	103c
BIA-CADDO COUNTY LANDFILL #3	NE/4 NE4 SEC10 T7N R13W	CARNEGIE	OK		INTERIOR	103c
BIA-CADDO COUNTY LANDFILL #4	W2 NW4 SEC35 T8N R13W	CARNEGIE	OK		INTERIOR	103c
BIA-CADDO COUNTY LANDFILL #5	W/2 SW/4 SEC 16 T6N R11	APACHE	OK		INTERIOR	103c
BIA-CADDO COUNTY LANDFILL #6	SE4 SE4 SEC34 T9N R12	FORT COBB	OK		INTERIOR	103c
BIA-CADDO COUNTY LANDFILL #7	SW4 NE4 SEC14 T9N R12W	FORT COBB	OK		INTERIOR	103c
BIA-CADDO COUNTY LANDFILL #8	NE4 NE4 SEC22 T9N R12W	FORT COBB	OK		INTERIOR	103c
NEW ARMY AVIATION SUPPORT	ISLA GRANDE ROAD OFF HACIA FERNANDEZ.	SAN JUAN	PR		ARMY	103c
LA PORTE AIR NATIONAL GUARD	HIGHWAY 225	LAPORTE	TX	77571	AIR FORCE	103c
RANDOLPH AIR FORCE BASE	12 ABG/DE	SAN ANTONIO	TX	78150	AIR FORCE	3005 3010 3016 103c 103a
FORT SAM HOUSTON	BLDG 1183 TAYLOR ROAD	SAN ANTONIO	TX	78234	ARMY	3005 3010 3016 103c
GALVESTON FEDERAL ARMORY	5301 AVENUE SOUTH	GALVESTON	TX	77550	ARMY	3016 103c
SAGINAW (CSMS #1)	855 E. INDUSTRIAL	SAGINAW	TX	76131	ARMY	3016
SPR-BIG HILL	23 MI SW OF PT. ARTHUR	PORT ARTHUR	TX	77641	ENERGY	103c
FORT WORTH FEDERAL SUPPLY CENTER.	501 FELIX STREET	FORT WORTH	TX	76101	GENERAL SERVICES ADMINISTRATION.	3010 103c
NAVAL AIR STATION KINGSVILLE	554 MCCAIN ST STE 310	KINGSVILLE	TX	78363	NAVY	3010 103c 103a 3005
CUSTOMS-MILLINGTON ADDITION	4 BL EAST OF FM 170	PRESIDIO	TX	79845	TREASURY	103c
GENERAL BILLY MITCHELL FIELD	440 CSG/DE 300 E. COLLEGE AVE.	MILWAUKEE	WI	53207	AIR FORCE	3010 103c 3016
WYOMING ARNG OMS NO. 4	5500 BISHOP BOULEVARD	CHEYENNE	WY	82009–3320	ARMY	103c

[FR Doc. 01–24595 Filed 10–1–01; 8:45 am]

BILLING CODE 6560–50–P

ENVIRONMENTAL PROTECTION AGENCY

[FRL–7070–3]

Leaking Underground Storage Tank (LUST) Trust Fund Cooperative Agreements—USTfields Pilots; Announcement of Deadline Extension

AGENCY: Environmental Protection Agency (EPA).

ACTION: Request for proposals; notice of deadline extension.

SUMMARY: Due to the recent national events, EPA is extending the deadline for submitting proposals for USTfields Pilots from October 22, 2001 to November 19, 2001. Refer to **Federal Register**, 66 FR 44345, August 23, 2001 for more information.

DATES: The deadline for submitting proposals for the USTfields Pilots is extended to November 19, 2001. All proposals must be postmarked by that date. States, tribes, and intertribal consortia must send their proposals to their respective EPA Regional office via registered or tracked mail. (EPA Regional Office contact information is provided in the Proposal Guidelines.)

ADDRESSES: Besides obtaining the Proposal Guidelines on EPA's website at *www.epa.gov/oust*, interested persons can also obtain a copy by contacting their EPA Regional office or by calling the RCRA, Superfund, and EPCRA Call Center at the following numbers: Callers outside the Washington, DC metro area at 1–800–424–9346; callers in the Washington, DC metro area at (703) 412–9810; TDD for the hearing impaired at 1–800–553–7672.

FOR FURTHER INFORMATION CONTACT: Steven McNeely, EPA Office of Underground Storage Tanks (OUST) at (703) 603–7165, *mcneely.steven@epa.gov,* or Tim R. Smith, EPA OUST at (703) 603–7158, *smith.timr@epa.gov.*

Dated: September 25, 2001.

Devereaux Barnes,

Acting Assistant Administrator, Office of Solid Waste and Emergency Response.

[FR Doc. 01–24598 Filed 10–1–01; 8:45 am]

BILLING CODE 6560–50–P

ENVIRONMENTAL PROTECTION AGENCY

[FRL–7070–4]

Office of Research and Development, National Center for Environmental Assessment, Board of Scientific Counselors' Subcommittee Meeting

AGENCY: Environmental Protection Agency (EPA).

ACTION: Notice, revised meeting times on October 10–11, 2001.

SUMMARY: Pursuant to the Federal Advisory Committee Act, Public Law 92–463, as amended (5 U.S.C., App. 2) notification is hereby given that the U.S. Environmental Protection Agency, Office of Research and Development (ORD), National Center for Environmental Assessment (NCEA), Board of Scientific Counselors Subcommittee (BOSC), will hold a public meeting.

DATES: The meeting will be held on October 10 and 11, 2001. The meeting will begin at 8:30 am on October 10 and adjourn at approximately 6:00 pm. On October 11 the meeting will begin at 8:00 am for approximately one and one

quarter hour. The Sub Committee Members will then have a writing session for three hours. The Members will need to leave no later than noon due to the increased security at the airports. All times noted are Eastern Time.

ADDRESSES: The meeting will be held at the Charles Glover Building, 808 17th Street, NW, 4th Floor Conference Room, Washington, DC 20006. Seating is limited; therefore, you must notify Joanna Foellmer, Designated Federal Official, Board of Scientific Counselors Subcommittee, to confirm attendance no later than October 4 (address listed below).

FOR FURTHER INFORMATION CONTACT: Joanna Foellmer at (202) 564–3208.

SUPPLEMENTARY INFORMATION: The Board of Scientific Counselors (BOSC) was established to provide objective and independent counsel to the Office of Research and Development (ORD) on the management and operation of ORD's research programs. The primary functions of BOSC are: (1) to evaluate science and engineering research programs, laboratories, and research-management practices of ORD and recommend actions to improve their quality and/or strengthen their relevance to the mission of the EPA; and (2) to evaluate and provide advice concerning the use of peer review within ORD to sustain and enhance the quality of science in EPA.

In September 1997, a programmatic review of ORD's National Center of Environmental Assessment (NCEA) by an Ad Hoc Subcommittee of the BOSC provided an opportunity for NCEA to look at its past, present, and future. As part of the review, the staff and management of NCEA prepared a ''Self-Study Report,'' which was submitted to the BOSC Subcommittee for pre-meeting review. During the meeting, the Subcommittee discussed the Self-Study Report responses with NCEA management and staff. They gathered additional comments from the staff regarding the organization, management, human resources, and their professional relationships with the Agency and with external users of NCEA products. A final report from the BOSC Ad Hoc Subcommittee, dated April 1998, was submitted to NCEA. The final report included the conclusions and recommendations of the Subcommittee based on the input from the meeting, the Self Study Report, and the experience of the Subcommittee.

Since the 1998 report, NCEA has worked to refocus some of its activities and directions in response to the recommendations of the Subcommittee and in the context of the EPA and ORD Strategic Plans. As a next step, standing BOSC Subcommittees have been developed that will work closely with the individual ORD laboratories and centers. The membership of each of the standing subcommittees have been selected to reflect the missions of each ORD component within the risk assessment paradigm. The upcoming meeting is the first step in this working partnership between the NCEA-BOSC Subcommittee and NCEA management and staff.

NCEA is in process of developing a response to a series of questions that were submitted by the BOSC to help the NCEA-BOSC Subcommittee gauge the progress of the Center since its 1997 review and to evaluate science and planning activities that NCEA has developed to address the priorities and directions included in the EPA and ORD Strategic Plans. The October meeting will include a discussion of the NCEA responses to the questions and opportunities for public comment.

Anyone desiring a draft agenda may fax their request to Joanna Foellmer at Fax Number 202–565–0061. If you would prefer to e-mail your request, the address is: *Foellmer.Joanna@epa.gov*. Any member of the public wishing to make a presentation at the meeting should contact Joanna Foellmer, U.S. Environmental Protection Agency, Office of Research and Development, National Center for Environmental Assessment, (Mail Code: 8601D), 1200 Pennsylvania Avenue, N.W., Washington, DC 20460; or by telephone at (202) 564–3208. In general, each individual making an oral presentation will be limited to a total of three minutes. Requests for oral comments must be in writing (e-mail, fax or mail) and received by Joanna Foellmer no later than noon Eastern Time one week prior to the meeting. E-mail must be in WordPerfect formats suitable for Windows 95/98. The draft report will be available mid September. Anyone interested in a copy can download the file off the internet. Please contact Joanna Foellmer for the correct internet address.

Dated: September 25, 2001.

Art Payne,

Director, National Center for Environmental Assessment.

[FR Doc. 01–24602 Filed 10–1–01; 8:45 am]

BILLING CODE 6560–50–P

ENVIRONMENTAL PROTECTION AGENCY

[FRL–7070–6]

Announcement of Availability and Request for Comment on ''Recognizing Completion of Corrective Action Activities at RCRA Facilities'' Guidance

AGENCY: Environmental Protection Agency (EPA).

ACTION: Notice.

SUMMARY: The intent of this notice is to announce the availability of the ''Recognizing Completion of Corrective Action Activities at RCRA Facilities'' draft guidance memorandum, and invite public comment. By inviting comment, we hope to encourage greater involvement by States the regulated community, members of the public, and other stakeholders.

DATES: Comments may be submitted until November 1, 2001.

ADDRESSES: If you wish to comment on the draft guidance, you should send an original and two copies of your comments, referencing docket number F–2001–CCAA–FFFFF. If using regular U.S. Postal Service mail to: RCRA Docket Information Center, U.S. Environmental Protection Agency Headquarters (EPA HQ), Office of Solid Waste, Ariel Rios Building (5305G), 1200 Pennsylvania Avenue NW., Washington, DC 20460–0002. If using special delivery such as overnight express service send to: RCRA Docket Information Center (RIC), Crystal Gateway I, 1235 Jefferson Davis Highway, First Floor, Arlington, VA 22202. Hand deliveries of comments should be made to the Arlington, VA address above. You may also submit comments electronically through the internet to: *rcra-docket@epa.gov.* Comments in electronic format must also reference the docket number F–2001–CCAA–FFFFF. If you choose to submit your comments electronically, you should submit them as an ASCII file and should avoid the use of special characters and any form of encryption.

You should not submit electronically confidential business information (CBI). You must submit an original and two copies of CBI under separate cover to: RCRA CBI Document Control Officer, Office of Solid Waste, U.S. EPA, Ariel Rios Building (5303W), 1200 Pennsylvania Avenue NW, Washington DC 20460–0002.

Any public comment we receive and supporting materials will be available for viewing in the RCRA Information Center (RIC), located at Crystal Gateway

I, First Floor, 1235 Jefferson Davis Highway, Arlington, VA. The RIC is open from 9 a.m. to 4 p.m., Monday through Friday, excluding federal holidays. To review docket materials, we recommend that you make an appointment by calling 703–603–9230. You may copy a maximum of 100 pages from any regulatory docket at no charge. Additional copies cost $0.15 per page. The index and some supporting materials are available electronically. *See* the Supplementary Information section of this **Federal Register** notice for information on accessing the index and these supporting materials.

The Agency is posting this document on the Corrective Action website: *http://www.epa.gov/correctiveaction.* If you would like to receive a hard copy, please call the RCRA Hotline at 800–424–0346 or TDD 800–553–7672 (hearing impaired). In the Washington, DC, metropolitan area, call 703–412–9810 or TDD 703–412–3323.

For more detailed information on specific aspects of the draft guidance document, contact Barbara Foster, Office of Solid Waste 5303W, U.S. Environmental Protection Agency, 1200 Pennsylvania Avenue NW, Washington, DC 20460, (703–308–7057), (*foster.barbara@epa.gov*).

SUPPLEMENTARY INFORMATION: The draft guidance document will be available on the Internet at: http://www.epa.gov/correctiveaction.completion of corrective action activities. This guidance will take the form of a memorandum from EPA headquarters to the Regional offices. EPA developed this memorandum to provide guidance to EPA and State regulators in recognizing completion determinations at RCRA treatment, storage, and disposal facilities. By recognizing completion of corrective action activities, the agency can inform the owner or operator that RCRA corrective action is complete at the facility. This information can promote transfer of ownership of the property and, in some cases, can help return previously used commercial and industrial properties, or ''brownfields,'' to productive use.

The official record for this notice will be kept in paper form. Accordingly, we will transfer all comment and input received electronically into paper form and place them in the official record, which also will include all comments submitted directly in writing. The official record is the paper record maintained at the RCRA Information Center.

All input will be considered thoroughly and seriously by EPA. EPA will not immediately reply to commenters electronically other than to seek clarification of electronic comments that my be garbled in transmission or during conversion to paper form, as discussed above.

Dated: September 25, 2001.

Elizabeth Cotsworth,

Director, Office of Solid Waste.

Memorandum

Subject: Recognizing Completion of Corrective Action Activities at RCRA Facilities

From: OSWER OECA

To: RCRA Division Directors, Regions I–X Enforcement Division Directors, Regions I–X Regional Counsel

This memorandum provides guidance to the Regions and the authorized States on acknowledging completion of corrective action activities at RCRA treatment, storage and disposal facilities.[1] It provides guidance on when completion determinations should be made, and the appropriate procedures EPA and the authorized States should follow when making completion of corrective action determinations.[2]

Why Recognize Completion of Corrective Action?

An official determination that corrective action is complete, made through appropriate procedures, benefits the owner or operator of the facility, the regulatory agency implementing the corrective action, and the public. By making a formal completion determination, the regulatory agency (EPA or the authorized State[3]) can inform the owner or operator of a facility that RCRA corrective action is complete at the facility. This information can promote transfer of ownership of the property and, in some cases, can help return previously used commercial and industrial properties, or ''brownfields,'' to productive use. Further, once the regulatory agency implementing corrective action makes a determination that corrective action is complete, it can remove that facility from its workload universe and focus agency resources on other facilities. Finally, because completion determinations should be made through a process that provides adequate public involvement, the process of making a formal completion determination assures the public an opportunity to review and comment on the cleanup, and to pursue available administrative and judicial challenges to the agency's decision.[4]

When Should an Agency Make a Determination That Corrective Action Is Complete?

At some facilities, EPA or the authorized State will determine that no corrective action is necessary. At facilities where corrective action is necessary, the regulatory agency should make a determination that corrective action is complete when a review of the remedy indicates that releases have been addressed as necessary to protect human health and the environment (*see* 40 CFR 264.101). Compliance with corrective action requirements should be evaluated against applicable requirements, e.g., the permit, a RCRA section 3008(h) order, or 40 CFR Part 264, Subart F. Regulatory agencies should consider the May 1, 1996 Advance Notice of Proposed Rulemaking (ANPR) and other Agency guidance, in making completion determinations (*see* 61 FR 19432).

What Procedures Should an Agency Follow to Recognize Completion of Corrective Action?

The regulations do not have explicit procedures for recognizing completion of corrective action, so the regulators have considerable flexibility in developing procedures for making completion determinations. The regulatory agency implementing the corrective action program in that State (i.e., the authorized State program or, in

[1] The RCRA statutory provisions and EPA regulations referenced in this document contain legally binding requirements. This document does not substitute for those provisions or regulations, nor is it a regulation itself. Thus, it does not impose legally-binding requirements on EPA, States, or the regulated community, and may not apply to a particular situation based upon the circumstances. EPA and State decisionmakers retain the discretion to adopt approaches on a case-by-case basis that differ from this guidance where appropriate. Any decisions regarding a particular facility will be made based on the applicable statutes and regulations. Therefore, interested parties are free to raise questions and objections about the appropriateness of the application of this guidance to a particular situation, and EPA will consider whether or not the recommendations or interpretations in the guidance are appropriate in that situation. EPA may change this guidance in the future.

[2] ''Completion of corrective action'' refers, for the purposes of this memorandum, to the satisfaction of obligations pertaining to past releases. Nothing in this memorandum is meant to address obligations regarding future releases at a facility. For example, the fact that the Agency has determined, at a permitted facility, that cleanup of past releases is ''complete,'' would not affect the facility's permitting obligation to report and clean up future releases at the facility.

[3] Authorized State for purposes of this memo refers to a State with an authorized corrective action program. It should be noted that in authorized States, EPA may be the lead Agency implementing corrective action at a facility under the authority of RCRA section 3008(h).

[4] The Agency anticipates that at facilities where meaningful public involvement begins early in the corrective action process, challenges at this point are less likely.

unauthorized States, EPA) should ensure that a completion determination has been made through appropriate procedures. Providing meaningful opportunities for public participation in the decisionmaking process should be a crucial component of a completion determination procedure. The Agency believes that the following generally are appropriate procedures for making completion determinations.[5]

At permitted facilities, the agency (EPA or the authorized States) should modify the permit to reflect the agency's determination that corrective action is complete. The current regulations in 40 CFR 270.42 provide procedural requirements for facility requested permit modifications. In most cases, completion of corrective action will be a Class 3 permit modification, and the agency should follow those procedures (or authorized State equivalent), including the procedures for public involvement. In cases where no other permit conditions remain, the permit could be modified not only to reflect the completion determination, but also to change the expiration date of the permit to allow earlier permit expiration (*see* 40 CFR 270.42 (Appendix I(A)(6)).

At non-permitted facilities where facility-wide corrective action is complete, and all other RCRA obligations at the facility have been satisfied, EPA or the authorized State may acknowledge completion of corrective action by terminating interim status through final administrative disposition of the facility's permit application (*see* 40 CFR 270.73(a)). To do so, the permitting authority at the facility (EPA or the authorized State or both, depending on the authorization status of the State) should process a final decision following the procedures for permit denial in 40 CFR part 124, or authorized equivalent.[6]

EPA recognizes that referring to this decision as a ''permit denial'' can be confusing to the public and problematic to the facility when the facility is in compliance, is not seeking a permit, and does not have an active permit ''application.'' Therefore, regulatory agencies may choose to use alternate terminology (e.g., a ''no permit necessary determination'') to refer to this decision, though it is issued through the permit denial process or authorized equivalent. Regardless of the terminology used, the basis for the decision should be stated clearly, generally that: (1) There are no ongoing treatment, storage, or disposal activities that require a permit; (2) all closure and post-closure requirements applicable at the regulated units have been fulfilled; and (3) all corrective action obligations have been met.

EPA and the authorized States may develop procedures for recognizing completion of corrective action at non-permitted facilities other than the permit decision process described above. For example, an agency may have procedures for issuing a notice informing the facility and the public that the facility has met its corrective action obligations, rather than issuing a final permit decision. EPA believes the alternative procedures should provide procedural protections equivalent to, although not necessarily identical to, those required by EPA's 40 CFR part 124 requirements (or the authorized State equivalent). Owners and operators should be aware that informal communications regarding the current status of cleanup activities at the site are not the same as completion determinations.

Use of an alternative procedure might be especially useful in acknowledging completion of a corrective action remedy (or a determination that no corrective action is necessary) that covers only a portion of the facility. A partial completion determination might be used at a facility that has cleaned up a portion of a facility and where a partial completion determination will facilitate the productive reuse of that portion of the facility. An alternative approach could also acknowledge completion of corrective action at a facility with ongoing RCRA activities. For example, a facility may be conducting post-closure care at a regulated unit under an alternate non-permit authority, as allowed under the October 22, 1998 Post-Closure rule (*see* 63 FR 56710), yet may have completed corrective action at its solid waste management units. In this case, interim status generally should not be terminated because all RCRA obligations have not been met, but it may be appropriate to issue a letter (as described above) recognizing completion of the corrective action obligations to bring finality to that process.

By following appropriate procedures the authorized agency can make a sound, well informed completion determination. However, EPA notes that, whether at a permitted or non-permitted facility and regardless of the completion determination procedure used, if EPA or the authorized state discovers unreported or misrepresented releases subsequent to the completion determination, then EPA and the authorized State may conclude that additional cleanup is needed.[7]

Where Can I Obtain Additional Information About Completion of Corrective Action?

For further information on completion of corrective action, please contact Barbara Foster at 703–308–7057 or Peter Neves at 202–564–6072.

[FR Doc. 01–24603 Filed 10–1–01; 8:45 am]

BILLING CODE 6560–50–P

[5] Of course, if a facility's permit provides otherwise, these procedures would not be appropriate at that facility.

[6] Under EPA permit denial procedures in 40 CFR part 124, EPA must issue, based on the administrative record, a notice of intent to deny the facility permit (*see* 40 CFR 124.6(b) and 124.9). The notice must be publicly distributed, accompanied by a statement of basis or fact sheet, and there must be an opportunity for public comment, including an opportunity for a public hearing, on EPA's proposed permit denial (*see* 40 CFR 124.7, 124.8, 124.10, 124.11, and 124.12). In making a final permit determination, EPA must respond to any public comments (*see* 40 CFR 124.17). Under 40 CFR 124.19, final decisions are subject to appeal.

[7] Of course, if EPA subsequently discovers a situation that may present an imminent and substantial endangerment to human health or the environment, EPA may elect to use its RCRA section 7003 imminent and substantial endangerment authority, or other applicable authorities, to require additional work at the facility.

ENVIRONMENTAL PROTECTION AGENCY

[FRL–7070–5]

San Gabriel Superfund Site; Notice of Administrative Settlement

AGENCY: Environmental Protection Agency (EPA).

ACTION: Notice.

SUMMARY: In accordance with the Comprehensive Environmental Response, Compensation and Liability Act of 1980, as amended by the Superfund Amendments and Reauthorization Act of 1986 (CERCLA), 42 U.S.C. 9600 *et seq.*, notice is hereby given that an Agreement and Covenant Not to Sue (Prospective Purchaser Agreement, or PPA) associated with the San Gabriel Superfund Site Superfund Site was executed by the U.S. Environmental Protection Agency (EPA) on September 25, 2001. The Prospective Purchaser Agreement resolves potential claims of the United States under sections 106 and 107(a) of CERCLA, 42 U.S.C. 9606 and 9607(a) against Northrop Grumman Systems Corporation, a Delaware corporation, (the Purchaser). The Purchaser plans to acquire Aerojet-General Corporation's electronics plant, comprising approximately 70, located at 1100 West Hollyvale Avenue, Azusa, California

within the Baldwin Park Operable Unit (BPOU) of the San Gabriel Valley Superfund Site. The Purchaser intends to use the plant for the design and manufacture of space-based sensors and smart weapons.

A notice of the proposed PPA and opportunity for public comment was published August 10, 2001 at 66 FR 42227. Based on a review of the public comments and EPA's independent analysis of the facts and circumstances concerning this matter, EPA has modified the proposed PPA.

The primary modification is that EPA has significantly increased the amount of consideration required in exchange for the liability release granted to the Purchaser. Specifically, the PPA now requires Aerojet to provide an additional $40 million in cash for deposit into a third-party escrow account.

The settlement now provides the following benefits to EPA: the Purchaser will pay EPA $325,000 in cash, to be held in reserve in a special account for future cleanup work at the BPOU; Aerojet, a potentially responsible party at the BPOU, will pay EPA $9 million as partial reimbursement of its past costs to be held in the same special account for the same purposes; Aerojet will pay $40 million into a third-party escrow account that may, with EPA approval, be used to fund construction of the groundwater remedy at the BPOU; and Aerojet's parent company, GenCorp Inc., will provide a written guaranty of $25 million to assure Aerojet's performance of future cleanup activities.

DATES: This Prospective Purchaser Agreement, as modified, is effective September 25, 2001.

Public Comments: The public comment period on the proposed Prospective Purchaser Agreement closed on September 10, 2001. EPA received 100 comments from various entities and individuals. Responses to these comments have been prepared and are available for public inspection at the address below.

ADDRESSES: The Prospective Purchaser Agreement, as modified, the Response to Public Comments and additional background documents relating to the settlement are available for public inspection in the Superfund Records Center, San Gabriel Valley Superfund Site file, at the U.S. Environmental Protection Agency, 75 Hawthorne Street, San Francisco, CA 94105. The modified Prospective Purchaser Agreement can be accessed through the Internet on EPA Region 9's Website located at: *http://www.epa.gov/region09/waste/brown/ppa.html.*

A copy of the Agreement may be obtained from Lewis Maldonado, Senior Counsel (ORC–3), Office of Regional Counsel, U.S. EPA Region IX, 75 Hawthorne Street, San Francisco, CA 94105. Comments should reference ''Northrop Grumman PPA, San Gabriel Superfund Site'' and ''Docket No. 2001–15'' and should be addressed to Lewis Maldonado at the above address.

FOR FURTHER INFORMATION CONTACT: Lewis Maldonado, Senior Counsel (ORC–3), Office of Regional Counsel, U.S. EPA Region IX, 75 Hawthorne Street, San Francisco, CA 94105; phone: (415) 744–1342; fax (415) 744–1041; e-mail: *maldonado.lewis@epa.gov.*

Dated: September 25, 2001.

John Kemmerer,

Acting Director, Superfund Division, Region IX.

[FR Doc. 01–24593 Filed 10–1–01; 8:45 am]

BILLING CODE 6560–50–P

FARM CREDIT ADMINISTRATION

Farm Credit Administration Board; Regular Meeting

AGENCY: Farm Credit Administration.

SUMMARY: Notice is hereby given, pursuant to the Government in the Sunshine Act (5 U.S.C. 552b(e)(3)), that the November 8, 2001 regular meeting of the Farm Credit Administration Board (Board) will not be held. The Board will hold a special meeting at 9 a.m. on Tuesday, November 6, 2001. An agenda for that meeting will be published at a later date.

FOR FURTHER INFORMATION CONTACT: Kelly Mikel Williams, Secretary to the Farm Credit Administration Board, (703) 883–4025, TDD (703) 883–4444.

ADDRESSES: Farm Credit Administration, 1501 Farm Credit Drive, McLean, Virginia 22102–5090.

Dated: September 28, 2001.

Jeanette C. Brinkley,

Acting Secretary, Farm Credit Administration Board.

[FR Doc. 01–24774 Filed 10–01; 8:45 am]

BILLING CODE 6705–01–M

FEDERAL COMMUNICATIONS COMMISSION

Notice of Public Information Collection(s) Being Reviewed by the Federal Communications Commission

September 24, 2001.

SUMMARY: The Federal Communications Commission, as part of its continuing effort to reduce paperwork burden invites the general public and other Federal agencies to take this opportunity to comment on the following information collection(s), as required by the Paperwork Reduction Act of 1995, Public Law 104–13. An agency may not conduct or sponsor a collection of information unless it displays a currently valid control number. No person shall be subject to any penalty for failing to comply with a collection of information subject to the Paperwork Reduction Act (PRA) that does not display a valid control number. Comments are requested concerning (a) whether the proposed collection of information is necessary for the proper performance of the functions of the Commission, including whether the information shall have practical utility; (b) the accuracy of the Commission's burden estimate; (c) ways to enhance the quality, utility, and clarity of the information collected; and (d) ways to minimize the burden of the collection of information on the respondents, including the use of automated collection techniques or other forms of information technology.

DATES: Written comments should be submitted on or before December 3, 2001. If you anticipate that you will be submitting comments, but find it difficult to do so within the period of time allowed by this notice, you should advise the contact listed below as soon as possible.

ADDRESSES: Direct all comments to Les Smith, Federal Communications Commission, Room 1–A804, 445 12th Street, SW, Washington, DC 20554 or via the Internet to *lesmith@fcc.gov.*

FOR FURTHER INFORMATION CONTACT: For additional information or copies of the information collection(s), contact Les Smith at 202–418–0217 or via the Internet at *lesmith@fcc.gov.*

SUPPLEMENTARY INFORMATION:

OMB Control Number: 3060–0057.

Title: Application for Equipment Authorization, 47 CFR Sections 2.911, 2.925, 2.932, 2.944, 2.960, 2.1033(a), and 2.1043.

Form Number: FCC 731.

Type of Review: Revision of currently approved collections.

Respondents: Business or other for-profit entities.

Number of Respondents: 5,600.

Estimate of Time Per Response: 18 to 30 hrs. (avg. 24 hrs.).

Frequency of Response: Record-keeping; On occasion reporting requirements.

Total Annual Burden: 134,400.

Total Annual Costs: $1,120,000.

Needs and Uses: Under sections of 47 CFR parts 15 and 18 of FCC Rules,

regulated equipment must comply with the Commission's technical standards before it is approved for marketing. Rules governing certain equipment operating in the licensed service also require equipment authorization under 47 CFR part 2. In ET Docket No. 00–47, the FCC established a Class III ''permissive change'' to permit manufacturers to make changes that affect the frequency, power, and modulation parameters of software defined radios without having to file a new equipment authorization application. However, new software can not be loaded into radios until the FCC or a designated Telecommunications Certification Body (TCB) approves the manufacturer's software changes and test data showing compliance with FCC technical standards with the new software loaded. The FCC will also allow ''electronic labeling'' for software defined radio transmitters—a liquid crystal display or similar screen displays the FCC identification number, and since the new technology replaces existing technology, the basic authorization process will not change.

OMB Control Number: 3060–0934.

Title: Application for Equipment Authorization, 47 CFR Sections 2.925, 2.932, 2.944, 2.960, 2.962, 2.1043, 68.160, and 68.162.

Form Number: FCC TCB 731.

Type of Review: Revision of currently approved collection.

Respondents: Business or other for profit.

Number of Respondents: 1,600.

Estimated Time Per Response: 4 hrs.

Total Annual Burden: 6,400 hrs.

Total Annual Cost: $175,000.

Needs and Uses: Under 47 CFR parts 15 and 18 of FCC Rules, certain equipment must comply with FCC technical standards before it can be marketed. Equipment that operates in the licensed service requires FCC authorization under 47 CFR Parts 2 and 68. In the 1998 R&O, General Docket No. 98–68, the FCC permits a private sector firm, a ''Telecommunications Certification Body'' or TCB, to approve equipment for marketing and also established guidelines for ''Mutual Recognition Agreements'' with foreign trade partners. Once approved by the accrediting body and ''designated'' by the FCC, TCBs may accept Form 731 filings and evaluate the equipment's compliance with FCC Rules and technical standards. The TCB submits this information to the FCC via the Internet. In ET Docket No. 00–47, the FCC established a Class III ''permissive change'' to permit manufacturers to make changes affecting frequency, power, and modulation parameters of ''software defined radios'' without having to file a new equipment authorization application. The manufacturer must submit a description of the software changes to the FCC or a designated TCB. The FCC will also permit ''electronic labeling'' to be used on software defined radio transmitters.

Federal Communications Commission.

Magalie Roman Salas,

Secretary.

[FR Doc. 01–24571 Filed 10–1–01; 8:45 am]

BILLING CODE 6712–01–P

FEDERAL COMMUNICATIONS COMMISSION

[CC Docket No. 92–237; DA 01–2246]

Next Meeting of the North American Numbering Council

AGENCY: Federal Communications Commission.

ACTION: Notice.

SUMMARY: On September 27, 2001, the Commission released a public notice announcing the October 16–17, 2001 meeting and agenda of the North American Numbering Council (NANC). The intended effect of this action is to make the public aware of the NANC's next meeting and its agenda.

FOR FURTHER INFORMATION CONTACT: Deborah Blue, Special Assistant to the Designated Federal Officer (DFO) at (202) 418–2320 or *dblue@fcc.gov*. The address is: Network Services Division, Common Carrier Bureau, Federal Communications Commission, The Portals II, 445 12th Street, SW, Suite 6A207, Washington, DC 20554. The fax number is: (202) 418–2345. The TTY number is: (202) 418–0484.

SUPPLEMENTARY INFORMATION: Released: September 27, 2001.

The North American Numbering Council (NANC) has scheduled a meeting to be held Tuesday, October 16, 2001, from 8:30 a.m. until 5:00 p.m., and on Wednesday, October 17, 2001, from 8:30 a.m., until 12:00 noon (if required). The meeting will be held at the Federal Communications Commission, Portals II, 445 12th Street, SW, Room TW–C305, Washington, DC.

This meeting is open to members of the general public. The FCC will attempt to accommodate as many participants as possible.

The public may submit written statements to the NANC, which must be received two business days before the meeting. In addition, oral statements at the meeting by parties or entities not represented on the NANC will be permitted to the extent time permits. Such statements will be limited to five minutes in length by any one party or entity, and requests to make an oral statement must be received two business days before the meeting. Requests to make an oral statement or provide written comments to the NANC should be sent to Deborah Blue at the address under **FOR FURTHER INFORMATION CONTACT**, stated above.

Proposed Agenda

1. Announcements and Recent News
—NANC meeting schedule
2. Approve Minutes
—Conference Call Meeting of September 25, 2001
3. Report of the North American Numbering Plan Administrator
—Response to 2000 Performance Appraisal
—NANP Exhaust Analysis
—Regular NANPA Report
—Unavailable Code project status
—Assessment of August NRUF problems
4. Report of NANPA Oversight Working Group
—NANPA Contract Technical Requirements
—Regular NOWG Report
5. Presentation by National Thousands-Block Pooling Administrator
—Initial projection of pooling rollout schedule
—Access to details of PA–FCC contract terms
6. Report of NANP Expansion/Optimization IMG
7. Status of Industry Numbering Committee activities
—Status of ''orphaned code'' guidelines
8. Report of the Local Number Portability Administration (LNPA) Working Group
—Wireless Number Portability Operations (WNPO) Subcommittee
9. Report of NAPM LLC
10. Report from NBANC
11. Report of Cost Recovery Working Group
12. Steering Committee
—Table of NANC Projects
13. Report of Steering Committee
14. Action Items
15. Public Participation (5 minutes each, if any)
16. Other Business

Adjourn (5 PM)

Wednesday, October 17, 2001 (if required)

17. Complete any unfinished Agenda Items
18. Other Business

Federal Communications Commission.

Diane Griffin Harmon,

Acting Chief, Network Services Division, Common Carrier Bureau.

[FR Doc. 01–24627 Filed 10–1–01; 8:45 am]

BILLING CODE 6712–01–P

FEDERAL RESERVE SYSTEM

Formations of, Acquisitions by, and Mergers of Bank Holding Companies

The companies listed in this notice have applied to the Board for approval, pursuant to the Bank Holding Company Act of 1956 (12 U.S.C. 1841 *et seq.*) (BHC Act), Regulation Y (12 CFR Part 225), and all other applicable statutes and regulations to become a bank holding company and/or to acquire the assets or the ownership of, control of, or the power to vote shares of a bank or bank holding company and all of the banks and nonbanking companies owned by the bank holding company, including the companies listed below.

The applications listed below, as well as other related filings required by the Board, are available for immediate inspection at the Federal Reserve Bank indicated. The application also will be available for inspection at the offices of the Board of Governors. Interested persons may express their views in writing on the standards enumerated in the BHC Act (12 U.S.C. 1842(c)). If the proposal also involves the acquisition of a nonbanking company, the review also includes whether the acquisition of the nonbanking company complies with the standards in section 4 of the BHC Act (12 U.S.C. 1843). Unless otherwise noted, nonbanking activities will be conducted throughout the United States. Additional information on all bank holding companies may be obtained from the National Information Center website at www.ffiec.gov/nic/.

Unless otherwise noted, comments regarding each of these applications must be received at the Reserve Bank indicated or the offices of the Board of Governors not later than October 26, 2001.

A. Federal Reserve Bank of New York (Betsy Buttrill White, Senior Vice President) 33 Liberty Street, New York, New York 10045–0001:

1. Greater Community Bancorp, Totowa, New Jersey; to acquire 9.9 percent of the voting shares of 1st Constitution Bancorp, Cranbury, New Jersey, and thereby indirectly acquire 1st Constitution Bank, Cranbury, New Jersey.

B. Federal Reserve Bank of Chicago (Phillip Jackson, Applications Officer) 230 South LaSalle Street, Chicago, Illinois 60690–1414:

1. Piper Holdings, Inc., Covington, Indiana; to acquire 100 percent of the voting shares of Heritage Bancshares, Inc., Darlington, Indiana, and thereby indirectly acquire Heritage Bank & Trust Company, Darlington, Indiana.

2. Sturgis Bancorp, Inc., Sturgis, Michigan; to become a bank holding company by acquiring 100 percent of the voting shares of Sturgis Bank & Trust Company, Sturgis, Michigan.

C. Federal Reserve Bank of St. Louis(Randall C. Sumner, Vice President) 411 Locust Street, St. Louis, Missouri 63166–2034:

1. Henderson Bancshares, Inc., Lexington, Tennessee; to become a bank holding company by acquiring 100 percent of the voting shares of First State Bank, Henderson, Tennessee.

D. Federal Reserve Bank of Kansas City(Susan Zubradt, Assistant Vice President) 925 Grand Avenue, Kansas City, Missouri 64198–0001:

1. American National Corporation, Omaha, Nebraska; to acquire 100 percent of the voting shares of Quick Bancorp, Inc., Council Bluffs, Iowa, and thereby indirectly acquire Peoples National Bank, Council Bluffs, Iowa.

Board of Governors of the Federal Reserve System, September 26, 2001.

Robert deV. Frierson,

Deputy Secretary of the Board.

[FR Doc. 01–24540 Filed 10–1–01; 8:45 am]

BILLING CODE 6210–01–S

DEPARTMENT OF HEALTH AND HUMAN SERVICES

Office of the Secretary

Agency Information Collection Activities: Proposed Collections; Comment Request

The Department of Health and Human Services, Office of the Secretary will periodically publish summaries of proposed information collections projects and olicit public comments in compliance with the requirements of Section 3506(c)(2)(A) of the Paperwork Reduction Act of 1995. To request more information on the project or to obtain a copy of the information collection plans and instruments, call the OS Reports Clearance Officer on (202) 690–6207.

Comments are invited on: (a) Whether the proposed collection of information is necessary for the proper performance of the functions of the agency, including whether the information shall have practical utility; (b) the accuracy of the agency's estimate of the burden of the proposed collection of information; (c) ways to enhance the quality, utility and clarity of the information to be collected; and (d) ways to minimize the burden of the collection of information on respondents, including through the use of automated collection techniques or other forms of information technology.

Proposed Project 1. Applicant Background Survey—0990–0208—Extension—This form will be used to ask applicants for employment how they learned about a vacancy, to make sure that recruitment sources yield qualified women, minority and handicapped applicants in compliance with EEOC Management Directives. Respondents: Individuals; Annual Number of Respondents: 310,000; Annual Frequency of Response: one time; Average Burden per Response: 2 minutes; Total Annual Burden: 10,333 hours.

Send comments to Cynthia Agens Bauer, OS Reports Clearance Officer, Room 503H, Humphrey Building, 200 Independence Avenue, SW, Washington, DC 20201. Written comments should be received within 60 days of this notice.

Dated: September 21, 2001.

Kerry Weems,

Acting, Deputy Assistant Secretary, Budget.

[FR Doc. 01–24583 Filed 10–1–01; 8:45 am]

BILLING CODE 4150–24–M

DEPARTMENT OF HEALTH AND HUMAN SERVICES

National Committee on Vital and Health Statistics: Meeting

Pursuant to the Federal Advisory Committee Act, the Department of Health and Human Services announces the following advisory committee meeting.

Name: National Committee on Vital and Health Statistics (NCVHS), Subcommittee on Standards and Security.

Time and Date: 9 a.m. to 5 p.m., October 9, 2001; 9 a.m. to 12:30 p.m., October 10, 2001.

Place: Hubert H. Humphrey Building, Room 705A, 200 Independence Avenue S.W., Washington, DC.

Status: Open.

Purpose: The Subcommittee is evaluating Patient Medical Record Information (PMRI) message format standards from ASTM, DICOM, HL7, IEEE, NCPDP Script, and Object Management Group. The Subcommittee will be receiving testimony from vendors, consultants and users of these standards with a possible outcome being the formulation of recommendations to the HHS Secretary about their use as HIPAA standards.

Notice: In the interest of security, HHS has instituted stringent procedures for entrance to the Hubert H. Humphrey building by non-government employees. Persons without a government identification card may need to have the guard call for an escort to the meeting.

Contact Person for more Information: Substantive program information as well as summaries of meetings and a roster of committee members may be obtained from J. Michael Fitzmaurice, Ph.D., Senior Science Advisor for Information Technology, Agency for Health Care Research and Quality, 2101 East Jefferson Street, #600, Rockville, MD 20852, phone: (301) 594–3938; or Marjorie S. Greenberg, Executive Secretary, NCVHS, National Center for Health Statistics, Centers for Disease Control and Prevention, Room 1100, Presidential Building, 6525 Belcrest Road, Hyattsville, Maryland 20782, telephone (301) 458–4245. Information also is available on the NCVHS home page of the HHS website: *http://www.ncvhs.hhs.gov/* where an agenda for the meeting will be posted when available.

Dated: September 21, 2001.

James Scanlon,

Director, Division of Data Policy, Office of the Assistant Secretary for Planning and Evaluation.

[FR Doc. 01–24584 Filed 10–1–01; 8:45 am]

BILLING CODE 4151–05–M

DEPARTMENT OF HEALTH AND HUMAN SERVICES

Centers for Disease Control and Prevention

Healthcare Infection Control Practices Advisory Committee (HICPAC): Meeting

In accordance with section 10(a)(2) of the Federal Advisory Committee Act (Pub. L. 92–463), the Centers for Disease Control and Prevention (CDC) announces the following meeting.

Name: Healthcare Infection Control Practices Advisory Committee.

Times and Dates: 8:30 a.m.–5 p.m., November 13, 2001; 8:30 a.m.–4 p.m., November 14, 2001.

Place: CDC, Auditorium A, 1600 Clifton Road, NE, Atlanta, Georgia 30333.

Status: Open to the public, limited only by the space available.

Purpose: The Committee is charged with providing advice and guidance to the Secretary, the Assistant Secretary for Health, the Director, CDC, and the Director, National Center for Infectious Diseases (NCID), regarding (1) the practice of hospital infection control; (2) strategies for surveillance, prevention, and control of infections (e.g., nosocomial infections), antimicrobial resistance, and related events in settings where healthcare is provided; and (3) periodic updating of guidelines and other policy statements regarding prevention of healthcare associated infections and healthcare-related conditions.

Matters to be Discussed: Agenda items will include a review of the Draft Guideline for Hand Hygiene in Healthcare Settings, the Draft Guideline for Preventing Transmission of Infectious Agents in Healthcare Settings (formerly Guideline Isolation Precautions in Hospitals), the Draft Guideline for Prevention of Intravascular Catheter-related Infections; and updates on CDC activities of interest to the committee.

Agenda items are subject to change as priorities dictate.

Contact Person for More Information: Michele L. Pearson, M.D., Executive Secretary, HICPAC, Division of Healthcare Quality Promotion, NCID, CDC, 1600 Clifton Road, NE, M/S A–07, Atlanta, Georgia 30333, telephone 404/498–1182.

The Director, Management Analysis and Services Office, has been delegated the authority to sign **Federal Register** notices pertaining to announcements of meetings and other committee management activities, for both the Centers for Disease Control and Prevention and the Agency for Toxic Substances and Disease Registry.

Dated: September 26, 2001.

John Burckhardt,

Acting Director, Management Analysis and Services Office, Centers for Disease Control and Prevention.

[FR Doc. 01–24568 Filed 10–1–01; 8:45 am]

BILLING CODE 4163–18–P

DEPARTMENT OF THE INTERIOR

Bureau of Indian Affairs

Proposed Agency Information Collection Activities; Comment Request

AGENCY: Bureau of Indian Affairs, Interior.

ACTION: Notice.

SUMMARY: This notice announces that the Information Collection Request for the Indian Child Welfare Act (ICWA) Annual Report requires renewal. The Indian Child Welfare Act Annual Report is required to ensure effectiveness of Indian Child Welfare Act programming. The proposed information collection requirement, with no appreciable changes, described below will be submitted to the Office of Management and Budget (OMB) for review after a public comment period, as required by the Paper Reduction Act of 1995. The Bureau is soliciting public comments on the subject proposal.

DATES: Written comments must be submitted on or before December 3, 2001.

ADDRESSES: Interested parties are invited to submit written comments regarding this proposal. Comments should refer to the proposal by name and/or OMB Control Number and should be sent to Larry Blair, Bureau of Indian Affairs, Department of the Interior, 1849 C Street, NW., MS–4660–MIB, Washington, DC, 20240. Telephone (202) 208–2479.

FOR FURTHER INFORMATION CONTACT: Requests for additional information or copies of the information collection instructions should be directed to Larry Blair, (202) 208–2479.

SUPPLEMENTARY INFORMATION:

I. Abstract

The information collection required by the use of this form is necessary to comply with Public Law 95–608, ''The Indian Child Welfare Act'' and as codified in 25 CFR Part 23—Indian Child Welfare Act. This information is collected through the use of a consolidated caseload form by tribal Indian Child Act program directors who are the providers of ICWA services. The information is used to determine the extent of service needs in local Indian communities, assessment of the Indian Child Welfare Act program effectiveness, and to provide data for the annual program budget justification. The responses of this collection of information are voluntary and the aggregated report is not considered confidential. The public is not required to respond unless a currently valid OMB control number is displayed.

II. Request for Comments

Please note that all comments received will be available for public review two weeks after publication in the **Federal Register**. If you wish to have your name and address withheld from review, please make that known at the start of your comments. We specifically request your comments be submitted to the address provided in the **ADDRESSES** section within 60 days on the following:

1. Whether the collection of information is necessary for the proper performance of the functions of the BIA, including whether the information will have practical utility;

2. The accuracy of the BIA's estimate of the burden of the information collection, including the validity of the methodology and assumptions used;

3. The quality, utility and clarity of the information to be collected; and

4. How to minimize the burden of the information collection on those who are to respond, including the use of appropriate automated electronic, mechanical or other forms of information technology.

III. Data

Title of the Collection of Information: Department of the Interior, Bureau of Indian Affairs, Indian Child Welfare Act Annual Report.

OMB Number: 1076–0131.

Affected Entities: Individual members of Indian tribes who are living on or near a tribally or legally defined service area.

Frequency of Response: Annually.

Estimated Number of Annual Responses: 554.

Estimated Time per Application: One-half hour.

Estimated Total Annual Burden Hours: 277 hours.

Dated: September 24, 2001.

Neal A. McCaleb,

Assistant Secretary—Indian Affairs.

[FR Doc. 01–24581 Filed 10–1–01; 8:45 am]

BILLING CODE 4310–02–P

DEPARTMENT OF THE INTERIOR

Bureau of Indian Affairs

Berry Creek Rancheria Liquor Ordinance

AGENCY: Bureau of Indian Affairs, Interior.

ACTION: Notice.

SUMMARY: This Notice publishes the Berry Creek Rancheria Liquor Ordinance. The Ordinance regulates the control, possession, and sale of liquor on the Berry Creek Rancheria trust lands, in conformity with the laws of the State of California, where applicable and necessary. Although the Ordinance was adopted on July 8, 2001, it does not become effective until published in the **Federal Register** because the failure to comply with the Ordinance may result in criminal charges.

DATES: This Ordinance is effective on October 2, 2001.

FOR FURTHER INFORMATION CONTACT: Kaye Armstrong, Branch of Tribal Relations, Division of Tribal Government Services, 1849 C Street NW., MS 4631–MIB, Washington, DC 20240–4001; Telephone (202) 208–4400.

SUPPLEMENTARY INFORMATION: Pursuant to the Act of August 15, 1953, Public Law 83–277, 67 Stat. 586, 18 U.S.C. 1161, as interpreted by the Supreme Court in Rice v. Rehner, 463 U.S. 713 (1983), the Secretary of the Interior shall certify and publish in the **Federal Register** notice of adopted liquor ordinances for the purpose of regulating liquor transactions in Indian country. The Berry Creek Rancheria Liquor Ordinance No. 00–02 was duly adopted by the General Council of the Berry Creek Rancheria on July 8, 2001. The Berry Creek Rancheria, in furtherance of its economic and social goals, has taken positive steps to regulate sales of alcohol and use revenues to combat alcohol abuse and its debilitating effects among individuals and family members within the reservation of the Berry Creek Rancheria.

This notice is published in accordance with the authority delegated by the Secretary of the Interior to the Assistant Secretary-Indian Affairs by 209 Departmental Manual 8.1.

I certify that the General Council of the Berry Creek Rancheria duly adopted Ordinance No. 00–02 on July 8, 2001.

Dated: August 29, 2001.

Neal A. McCaleb,

Assistant Secretary—Indian Affairs.

The Berry Creek Rancheria Liquor Ordinance reads as follows:

The Berry Creek Rancheria Liquor Ordinance No. 00–02

Chapter I—Introduction

Section 101. Title. This ordinance shall be known as the Berry Creek Rancheria Liquor Ordinance No. 00–02.

Section 102. Authority. This ordinance is enacted pursuant to the Act of August 15, 1953 (Public Law 83–277, 67 Stat. 588, 18 U.S.C. 1161) and the Articles of Association of The Berry Creek Rancheria adopted February 5, 1977, and approved May 5, 1977, and as amended in accordance with amendments 1,11,111, IV, V and VI, ratified by the Berry Creek Rancheria on December 16, 1979, and approved by the Area Director on October 15, 1980, and in accordance with amendments VII, VIII and IX ratified by the Berry Creek Rancheria on March 17, 1983, and approved by the Area Director on June 24, 1983.

Section 103. Purpose. The purpose of this ordinance is to regulate and control the possession and sale of liquor on the Berry Creek Rancheria. The enactment of a tribal ordinance governing liquor possession and sale on the Rancheria will increase the ability of the tribal government to control Rancheria liquor distribution and possession, and at the same time will provide an important source of revenue for the continued operation and strengthening of the tribal government and the delivery of tribal government services.

Chapter II—Definitions

Section 201. As used in this ordinance, the following words shall have the following meanings unless the context clearly requires otherwise.

Section 202. Alcohol. Means that substance known as ethyl alcohol, hydrated oxide of ethyl, or spirit of wine, which is commonly produced by the fermentation, or distillation of grain, starch, molasses, or sugar, or other substances including all dilutions of this substance.

Section 203. Alcoholic Beverage. Is synonymous with the term Liquor as defined in Section 207 of this Chapter.

Section 204. Bar. Means any establishment with special space and accommodations for sale by the glass, can or bottle and for consumption on the premises of liquor, as herein defined.

Section 205. Beer. Means any beverage obtained by the alcoholic fermentation of an infusion or decoction of pure hops, or pure extract of hops and pure barley malt or other wholesome grain of cereal in pure water containing not more than four percent of alcohol by volume. For the purposes of this title, any such beverage, including ale, stout, and porter, containing more than four percent of alcohol by weight shall be referred to as ''strong beer.''

Section 206. General Membership. Means as prescribed and defined by the Articles of Association of the Berry Creek Rancheria, Article II Membership, Sections I, II and III.

Section 207. Liquor. Includes the four varieties of liquor herein defined (alcohol, spirits, wine and beer), and all fermented spirituous, vinous, or malt liquor or combination thereof, and mixed liquor, or otherwise intoxicating beverages; and every liquid or solid or semisolid or other substance, patented or not, containing alcohol, spirits, wine or beer, and all drinks or drinkable liquids and all preparations or mixtures capable of human consumption and any liquid, semisolid, solid, or other substances, which contain more than one percent of alcohol by weight shall be conclusively deemed to be intoxicating.

Section 208. Liquor Store. Means any store at which liquor is sold and, for the purposes of this ordinance, includes stores only a portion of which are devoted to sale of liquor or beer.

Section 209. Malt Liquor. Means beer, strong beer, ale stout, and porter.

Section 210. Package. Means any container or receptacle used for holding liquor.

Section 211. Rancheria. Means land held in trust by the United States Government for the benefit of the Indians of the Berry Creek Rancheria (see also Section 216, Tribal Land).

Section 212. Sale and Sell. Includes exchange, barter, and traffic; and also includes the selling or supplying or distributing by any means whatsoever, of liquor, or of any liquid known or described as beer or by any name whatsoever commonly used to describe malt or brewed liquor or wine by any person to any person.

Section 213. Spirits. Means any beverage, which contains alcohol obtained by distillation, including wines exceeding 17 percent of alcohol by weight.

Section 214. Tribal Council. Means the Tribal Council of the Berry Creek Rancheria.

Section 215. Tribal Land. Means any land within the exterior boundaries of the Rancheria, which is held in trust by the United States for the Tribe as a whole, including such land leased to other parties.

Section 216. Tribe. Means the Berry Creek Rancheria.

Section 217. Wine. Means any alcoholic beverage obtained by fermentation of fruits (grapes, berries, apples, etc.) or other agricultural product containing sugar, to which any saccharine substances may have been added before, during or after fermentation, and containing not more than 17 percent of alcohol by weight, including sweet wines fortified with wine spirits such as port, sherry, muscatel, and angelica, not exceeding 17 percent of alcohol by weight.

Section 218. Trust Account. Means the account designated by the General Council for deposit of proceeds from the tax from the sale of alcoholic beverages.

Section 219. Trust Agent. Means the Tribal Chairperson or other designee of the General Council.

Chapter III—Powers of Enforcement

Section 301. Powers. The General Council, in furtherance of this ordinance, shall have the powers and duties to:

(a) Publish and enforce the rules and regulations governing the sale, manufacture, and distribution of alcoholic beverages on the Rancheria;

(b) Employ managers, accountants, security personnel, inspectors, and such other persons as shall be reasonably necessary to allow the General Council to perform its functions;

(c) Issue licenses permitting the sale or manufacture or distribution of liquor on the Rancheria;

(d) Hold hearings on violations of this ordinance or for the issuance or revocation of licenses hereunder;

(e) Bring suit in the appropriate court to enforce this ordinance as necessary;

(f) Determine and seek damages for violation of this ordinance;

(g) Make such reports as may be required by the General Membership;

(h) Collect taxes and fees levied or set by the General Council and to keep accurate records, books, and accounts; and

(i) Exercise such powers as are delegated by the General Council.

Section 302. Limitation on Powers. In the exercise of its powers and duties under this ordinance, the General Council and its individual members shall not accept any gratuity, compensation or other thing of value from any liquor wholesaler, retailer, or distributor or from any licensee.

Section 303. Inspection Rights. The premises on which liquor is sold or distributed shall be open for inspection by the General Council or its designee at all reasonable times for the purposes of ascertaining whether the rules and regulations of this ordinance are being complied with.

Chapter IV—Sales of Liquor

Section 401. Licenses Required. No sales of alcoholic beverages shall be made within the exterior boundaries of the Rancheria, except at a tribally licensed or tribally owned business operated on tribal land within the exterior boundaries of the Rancheria.

Section 402. Sales Only on Tribal Land. All liquor sales within the exterior boundaries of the Rancheria shall be on tribal land, including leases thereon.

Section 403. Sales for Cash. All liquor sales within the Rancheria boundaries shall be on a cash only basis and no credit shall be extended to any person, organization, or entity, except that this provision does not prevent the use of major credit cards such as Visa, American Express, etc.

Section 404. Sale for Personal Consumption. All sales shall be for the personal use and consumption of the purchaser. Resale of any alcoholic beverage purchased within the exterior boundaries of the Rancheria is prohibited. Any person who is not licensed pursuant to this ordinance who purchases an alcoholic beverage within the boundaries of the Rancheria and sells it, whether in the original container or not, shall be guilty of a violation of this ordinance and shall be subjected to paying damages to the Tribe as set forth herein.

Chapter V—Licensing

Section 501. Application for Tribal Liquor License Requirements. No tribal license shall be issued under this ordinance except upon a sworn application filed with the General Council containing a full and complete showing of the following:

(a) Satisfactory proof that the applicant is or will be duly licensed by the State of California.

(b) Satisfactory proof that the applicant is of good character and reputation among the people of the Rancheria and that the applicant is financially responsible.

(c) The description of the premises in which the intoxicating beverages are to be sold, proof that the applicant is the owner of such premises, or lessee of such premises for at least the term of the license.

(d) Agreement by the applicant to accept and abide by all conditions of the tribal license.

(e) Payment of $250 fee as prescribed by the General Council.

(f) Satisfactory proof that neither the applicant nor the applicant's spouse has ever been convicted of a felony.

(g) Satisfactory proof that notice of the application has been posted in a prominent, noticeable place on the premises where intoxicating beverages are to be sold for at least 30 days prior to consideration by the General Council and has been published at least twice in such local newspaper serving the community that may be affected by the license the General Council may authorize. The notice shall state the date, time and place when the application shall be considered by the General Council pursuant to Section 502 of this ordinance.

Section 502. Hearing on Application for Tribal Liquor License. All applications for a tribal liquor license shall be considered by the General Council in open session at which the applicant, his attorney, and any person protesting the application shall have the right to be present, and to offer sworn oral or documentary evidence relevant to the application. After the hearing, the General Council shall determine whether to grant or deny the application based on:

(1) Whether the requirements of Section 501 have been met; and

(2) Whether the General Council, in its discretion, determines that granting the license is in the best interests of the Tribe.

In the event that the applicant is a member of the General Council, or a member of the immediate family of a General Council member, such members

shall not vote on the application or participate in the hearings as a General Council member.

Section 503. Temporary Permits. The General Council or its designee may grant a temporary permit for the sale of intoxicating beverages for a period not to exceed 3 days to any person applying for the same in connection with a tribal or community activity, provided that the conditions prescribed in Section 504 of this ordinance shall be observed by the permittee. Each permit issued shall specify the types of intoxicating beverages to be sold. Further, a fee of $25 will be assessed on temporary permits.

Section 504. Conditions of the Tribal License. Any tribal license issued under this title shall be subject to such reasonable conditions as the General Council shall fix, including, but not limited to the following:

(a) The license shall be for a term not to exceed 1 year.

(b) The licensee shall at all times maintain an orderly, clean and neat establishment, both inside and outside the licensed premises.

(c) The licensed premises shall be subject to patrol by the tribal enforcement department, and such other law enforcement officials as may be authorized under tribal law.

(d) The licensed premises shall be open to inspection by duly authorized tribal officials at all times during the regular business hours.

(e) Subject to the provisions of subsection (f) of this section, no intoxicating beverages shall be sold, served, disposed of, delivered or consumed on the licensed premises except in conformity with the hours and days prescribed by the laws of the State of California, and in accordance with the hours fixed by the General Council, provided that the licensed premise shall not operate or open earlier or operate or close later than is permitted by the laws of the State of California.

(f) No liquor shall be sold within 200 feet of a polling place on Tribal election days, or when a referendum is held of the people of the Tribe, and including special days of observation as designated by the General Council.

(g) All acts and transactions under authority of the tribal liquor license shall be in conformity with the laws of the State of California, and shall be in accordance with this ordinance and any Tribal license issued pursuant to this ordinance.

(h) No person under the age permitted under the laws of the State of California shall be sold, served, delivered, given, or allowed to consume alcoholic beverages in the licensed establishment and/or area.

Section 505. License Not a Property Right. Notwithstanding any other provision of this ordinance, a Tribal liquor license is a mere permit for a fixed duration of time. A Tribal liquor license shall not be deemed a property right or vested right of any kind, nor shall the granting of a tribal liquor license give rise to a presumption of legal entitlement to the granting of such license for a subsequent time period.

Section 506. Assignment or Transfer. No tribal license issued under this ordinance shall be assigned or transferred without the written approval of the General Council expressed by formal resolution.

Chapter VI—Rules, Regulations, and Enforcement

Section 601. Sales or Possession With Intent to Sell Without a Permit. Any person who shall sell or offer for sale or distribute or transport in any manner, any liquor in violation of this ordinance, or who shall operate or shall have liquor in his possession with intent to sell or distribute without a permit, shall be guilty of a violation of this ordinance.

Section 602. Purchases From Other Than Licensed Facilities. Any person within the boundaries of the Rancheria who buys liquor from any person other than at a properly licensed facility shall be guilty of a violation of this ordinance.

Section 603. Sales to Persons Under the Influence of Liquor. Any person who sells liquor to a person apparently under the influence of liquor shall be guilty of a violation of this ordinance.

Section 604. Consuming Liquor in Public Conveyance. Any person engaged wholly or in part in the business of carrying passengers for hire, and every agent, servant or employee or such person who shall knowingly permit any person to drink any liquor in any public conveyance shall be guilty of an offense. Any person who shall drink any liquor in a public conveyance shall be guilty of a violation of this ordinance.

Section 605. Consumption or Possession of Liquor by Persons Under 21 Years of Age. No person under the age of 21 years shall consume, acquire or have in his possession any alcoholic beverage. No person shall permit any other person under the age of 21 to consume liquor on his premises or any premises under his control except in those situations set out in this section. Any person violating this section shall be guilty of a separate violation of this ordinance for each and every drink so consumed.

Section 606. Sales of Liquor to Persons Under 21 Years of Age. Any person who shall sell or provide liquor to any person under the age of 21 years shall be guilty of a violation of this ordinance for each sale or drink provided.

Section 607. Transfer of Identification to Minor. Any person who transfers in any manner an identification of age to a minor for the purpose of permitting such minor to obtain liquor shall be guilty of an offense; provided, that corroborative testimony of a witness other than the minor shall be a requirement of finding a violation of this ordinance.

Section 608. Use of False or Altered Identification. Any person who attempts to purchase an alcoholic beverage through the use of false or altered identification, which falsely purports to show the individual to be over the age of 21 years, shall be guilty of violating this ordinance.

Section 609. Violations of This Ordinance. Any person guilty of a violation of this ordinance shall be liable to pay the Tribe a penalty not to exceed $500 per violation as civil damages to defray the Tribe's cost of enforcement of this ordinance. In addition to any penalties so imposed, any license issued hereunder may be suspended or canceled by the General Council after 10 days notice to the licensee. The decision of the General Council shall be final.

Section 610. Acceptable Identification. Where there may be a question of a persons right to purchase liquor by reason of his age, such person shall be required to present any one of the following issued cards of identification which shows his correct age and bears his signature and photograph:

(1) Driver's license of any state or identification card issued by any State Department of Motor vehicles;

(2) United States Active Duty Military identity card; or

(3) Passport.

Section 611. Possession of Liquor Contrary to This Ordinance. Alcoholic beverages which are possessed contrary to the terms of this ordinance are declared to be contraband. Any tribal agent, employee, or officer who is authorized by the General Council to enforce this section shall have the authority to, and shall seize, all contraband.

Section 612. Disposition of Seized Contraband. Any officer seizing contraband shall preserve the contraband in accordance with the appropriate California law code. Upon being found in violation of the ordinance by the Tribal Council, the party shall forfeit all right, title and

interest in the items seized which shall become the property of the Tribe.

Chapter VII—Taxes

Section 701. Sales Tax. There is hereby levied and shall be collected a tax on each sale of alcoholic beverages on the Rancheria in the amount of 1 percent of the amount actually collected, including payments by major credit cards. The tax imposed by this section shall apply to all retail sales of liquor on the Rancheria and shall preempt any tax imposed on such liquor sales by the State of California.

Section 702. Payment of Taxes to Tribe. All taxes from the sale of alcoholic beverages on the Rancheria shall be paid over to the trust agent of the Tribe.

Section 703. Taxes Due. All taxes for the sale of alcoholic beverages on the Rancheria are due within 30 days at the end of the calendar quarter for which the taxes are due.

Section 704. Reports. Along with payment of the taxes imposed herein, the taxpayer shall submit an accounting for the quarter of all income from the sale or distribution of said beverages as well as for the taxes collected.

Section 705. Audit. As a condition of obtaining a license, the licensee must agree to the review or audit of its books and records relating to the sale of alcoholic beverages on the Rancheria. Said review or audit may be done annually by the Tribe through its agents or employees whenever, in the opinion of the General Council, such a review or audit is necessary to verify the accuracy of reports.

Chapter VIII—Profits

Section 801. Disposition of Proceeds. The gross proceeds collected by the General Council from all licensing provided from the taxation of the sale of alcoholic beverages on the Rancheria shall be distributed as follows:

(a) For the payment of all necessary personnel, administrative costs, and legal fees for the operation and its activities.

(b) The remainder shall be turned over to the Trust Account of the Tribe.

Chapter IX—Severability and Miscellaneous

Section 901. Severability. If any provision or application of this ordinance is determined by review to be invalid, such adjudication shall not be held to render ineffectual the remaining portions of this title or to render such provisions inapplicable to other persons or circumstances.

Section 902. Prior Enactments. All prior enactments of the General Council, which are inconsistent with the provisions of this ordinance, are hereby rescinded.

Section 903. Conformance with California Laws. All acts and transactions under this ordinance shall be in conformity with the laws of the State of California as that term is used in 18 U.S.C.1161.

Section 904. Effective Date. This ordinance shall be effective on such date as the Secretary of the Interior certifies this ordinance and publishes the same in the **Federal Register**.

Chapter X—Amendment

Section 1001. This ordinance may only be amended by a majority vote of the General Council.

Chapter XI—Sovereign Immunity

Section 1101. Nothing contained in this ordinance is intended to, nor does in any way limit, alter, restrict, or waive the Tribe's sovereign immunity from unconsented suit or action.

[FR Doc. 01–24582 Filed 10–1–01; 8:45 am]

BILLING CODE 4310–02–P

DEPARTMENT OF THE INTERIOR

Bureau of Land Management

[WY–920–1310–01; WYW 151006]

Notice of Proposed Reinstatement of Terminated Oil and Gas Lease

Pursuant to the provisions of 30 U.S.C. 188(d) and (e), and 43 CFR 3108.2–3(a) and (b)(1), a petition for reinstatement of oil and gas lease WYW151006 for lands in Carbon County, Wyoming, was timely filed and was accompanied by all the required rentals accruing from the date of termination. The lessee has agreed to the amended lease terms for rentals and royalties at rates of $10.00 per acre, or fraction thereof, per year and 16⅔ percent, respectively.

The lessee has paid the required $500 administrative fee and $158 to reimburse the Department for the cost of this **Federal Register** notice. The lessee has met all the requirements for reinstatement of the lease as set out in Section 31 (d) and (e) of the Mineral Lands Leasing Act of 1920 (30 U.S.C. 188), and the Bureau of Land Management is proposing to reinstate lease WYW151006 effective April 1, 1998, subject to the original terms and conditions of the lease and the increased rental and royalty rates cited above.

Pamela J. Lewis,

Chief, Fluid Minerals Adjudication.

[FR Doc. 01–24561 Filed 10–1–01; 8:45 am]

BILLING CODE 4310–22–M

DEPARTMENT OF THE INTERIOR

Bureau of Land Management

[WY–920–1310–01; WYW 149985]

Notice of Proposed Reinstatement of Terminated Oil and Gas Lease

Pursuant to the provisions of 30 U.S.C. 188(d) and (e), and 43 CFR 3108.2–3(a) and (b)(1), a petition for reinstatement of oil and gas lease WYW149985 for lands in Johnson County, Wyoming, was timely filed and was accompanied by all the required rentals accruing from the date of termination. The lessee has agreed to the amended lease terms for rentals and royalties at rates of $10.00 per acre, or fraction thereof, per year and 16⅔ percent, respectively.

The lessee has paid the required $500 administrative fee and $158 to reimburse the Department for the cost of this **Federal Register** notice. The lessee has met all the requirements for reinstatement of the lease as set out in Section 31 (d) and (e) of the Mineral Lands Leasing Act of 1920 (30 U.S.C. 188), and the Bureau of Land Management is proposing to reinstate lease WYW149985 effective May 1, 2001, subject to the original terms and conditions of the lease and the increased rental and royalty rates cited above.

Pamela J. Lewis,

Chief, Fluid Minerals Adjudication.

[FR Doc. 01–24562 Filed 10–1–01; 8:45 am]

BILLING CODE 4310–22–M

DEPARTMENT OF THE INTERIOR

Minerals Management Service (MMS)

Outer Continental Shelf, Central and Western Gulf of Mexico, Oil and Gas Lease Sales for Years 2002–2007

AGENCY: Minerals Management Service, Interior.

ACTION: Notice of dates and locations of scoping meetings for the Environmental Impact Statement (EIS).

SUMMARY: The MMS is proposing to prepare a single EIS (multisale EIS) for the nine areawide oil and gas lease sales in the Central and Western Planning Areas (CPA and WPA) scheduled for

2003–2007 in the draft proposed *Outer Continental Shelf Oil and Gas Leasing Program: 2002–2007.* The MMS will be soliciting information from States, local governments, the oil and gas industry, Federal Agencies, environmental and other interested organizations, and the public regarding issues and alternatives that should be evaluated in the EIS. The scoping meetings will provide information for the development of appropriate alternatives and mitigating measures, as well as to identify significant issues, to be considered in the draft EIS. Respondents are requested to focus their comments on the significant environmental issues attendant to OCS oil and gas leasing and development in the CPA and WPA and on alternative options for the size, timing, and location of sales.

DATES: The scoping meetings will be held on the following dates and at the times and locations indicated. Monday, October 15, 2001, The Victorian Condo-Hotel and Conference Center, 6300 Seawall Boulevard, Galveston, Texas, 6:30 p.m. to 8:30 p.m. Tuesday, October 16, 2001, Houston Airport Marriott, 18700 Kennedy Boulevard, Houston, Texas, 1:00 p.m. to 3:00 p.m. Thursday, October 18, 2001, Ramada Plaza Hotel, 600 S. Beltline Highway, Mobile, Alabama, 6:30 p.m. to 8:30 p.m. Monday, October 22, 2001, Minerals Management Service, 1201 Elmwood Park Boulevard, New Orleans, Louisiana, 1:00 p.m. to 3:00 p.m.

FOR FURTHER INFORMATION CONTACT: For information on the scoping meetings or the multisale EIS, please contact Mr. Joseph Christopher, Minerals Management Service, Gulf of Mexico OCS Region, 1201 Elmwood Park Boulevard, New Orleans, Louisiana 70123–2394, telephone (504) 736–2774.

SUPPLEMENTARY INFORMATION: Federal regulations allow for several proposals to be analyzed in one EIS (40 CFR 1502.4). Since each sale proposal and projected activities are very similar each year for each planning area, the MMS is preparing a multisale EIS for the nine CPA and WPA lease sales. The multisale approach is intended to focus the NEPA/EIS process on new issues and information for the annual lease sales. At the completion of this EIS process, decisions will be made only for proposed Sales 185 and 187, scheduled to be held in 2003. Subsequent to these first sales in the planning areas, a NEPA review will be conducted for each of the other proposed lease sales in the 2002–2007 Leasing Program. Formal consultation with other Federal Agencies, the affected States, and the public will be carried out to assist in the determination of whether or not the information and analyses in the original multisale EIS are still valid. These consultations and NEPA reviews will be completed before decisions are made on the subsequent sales. Comments are sought from all interested parties about particular geological, environmental, biological, archaeological and socioeconomic conditions or conflicts, or other information that might bear upon the potential leasing and development in the CPA and WPA. Comments are also sought on possible conflicts between future OCS oil and gas activities that may result from the proposed sales and State Coastal Management Programs (CMP). If possible, these comments should identify specific CMP policies of concern, the nature of the conflict foreseen, and steps that the MMS could take to avoid or mitigate the potential conflict.

Dated: September 10, 2001.

Chris C. Oynes,

Regional Director, Gulf of Mexico OCS Region.

[FR Doc. 01–24585 Filed 10–1–01; 8:45 am]

BILLING CODE 4310–MR–P

DEPARTMENT OF THE INTERIOR

National Park Service

George Washington Boyhood Home Special Resource Study

AGENCY: National Park Service, Department of the Interior.

ACTION: Notice of termination of the Environmental Impact Statement process for the George Washington Boyhood Home Special Resource Study.

SUMMARY: Under the provisions of the National Environmental Policy Act, the National Park Service will terminate the Environmental Impact Statement process for this study and prepare an Environmental Assessment.

The U.S. Congress authorized the special resource study in Section 509(c)(3) of Pub. L. 105–355 to examine how the cultural and natural resources of the property can be protected and public use of the site furthered. The George Washington boyhood Home property, also known as Ferry Farm, is located in Stafford County, Virginia. The property, part of the 18 century plantation where George Washington spent his youth, is now owned by the George Washington's Fredericksburg Foundation. Congress also authorized the Department of the Interior, through the National Park Service, to acquire easements on the property. The overall purpose of the study is to identify an appropriate management framework to achieve resource protection and public use goals. Leadership for the study project is being provided by the Superintendent of Fredericksburg and Spotsylvania National Military Park.

A Notice of Intent to prepare an Environmental Impact Statement was published in the **Federal Register** on August 14, 2000. The scoping process has been completed and draft alternatives developed in outline form. The recommended alternative will not involve new legislation. There is no potential for significant environmental effects.

FOR FURTHER INFORMATION CONTACT: Contact the Superintendent, Fredericksburg and Spotsylvania National Military Park, 540–373–4510 or at *ferryfarm@nps.gov.*

Dated: April 6, 2001.

Leonard C. Emerson,

Acting, Regional Director, Northeast Region.

[FR Doc. 01–24637 Filed 10–1–01; 8:45 am]

BILLING CODE 4310–70–M

DEPARTMENT OF THE INTERIOR

National Park Service

Draft General Management Plan/ Environmental Assessment, Saugus Iron Works National Historic Site, Essex County, MA

AGENCY: National Park Service, Interior.

ACTION: Notice of availability of Draft General Management Plan/ Environmental Assessment.

SUMMARY: Pursuant to Council on Environmental Quality regulations and National Park Service Policy, this notice announces the availability for public review of a Draft General Management Pan/Environmental Assessment for Saugus Iron Works National Historic Site, Essex County, Massachusetts. In accordance with the National Environmental Policy Act 102(2)(C) of 1969, the environmental assessment was prepared to assess the impacts of implementing the general management plan.

The Draft General Management Plan/ Environmental Assessment presents a Proposal and two Management Alternatives, then assesses the potential environmental, cultural and socioeconomic effects of the actions presented on site resources, visitor experience, and the surrounding area. The Proposal and the Alternatives differ in their approaches to achieving the site's management goals and resolving planning issues associated with those goals. Alternative 1 (The Preferred

Alternative) involves (a) rehabilitating the interior of the museum building to allow for compliance with NPS museum exhibit standards and consolidating the museum collections and archival materials in existing residences that would be adaptively reused to house these resources under appropriate climate controlled and protective systems, (b) removing existing maintenance facilities, restoring their current locations and consolidating them into a single facility, (c) adaptively reusing the Iron Works House Annex and Lean-to into a visitor contact facility, and (d) improving access through the iron works structures and between those structures and the Iron Works House and Museum for persons with disabilities and special needs. Alternative 2 (Enhanced Facility Development) involves (a) constructing a new collections storage facility adjacent to the existing museum building, (b) acquiring or leasing existing commercial or industrial space off-site for use as maintenance facilities, along with restoring the locations where such facilities are currently sited, (c) constructing a new visitor center at the site of the existing maintenance facility on the west bluff, and (d) implementing one of two alternative scenarios for providing improved access for visitors from the bluff to the industrial area: either a switchback trail or a long straight trail. Alternative 3 (The No Action Alternative) involves no changes to existing conditions.

DATES: The Draft General Management Plan/Environmental Assessment will be made available on July 9, 2001. Following a 60-day comment period, the environmental analysis, along with public and agency comments, will form the basis for the selection, by the Regional Director of a single plan for implementation. The Final General Management Plan/Environmental Assessment will then be issued and made available to the public for an additional 60 days. If at the end of that second review period, no significant issues or public controversy have arisen, the Regional Director will issue a Finding Of No Significant Impact (FONSI).

SUPPLEMENTARY INFORMATION: Copies of the document will be available for review at the following locations:

Saugus Iron Works National Historic Site-Visitor Kiosk, 244 Central Street, Saugus, MA 01906. The visitor kiosk is open everyday from 9 a.m. to 5 p.m.

The Saugus Public Library, 295 Central Street Saugus, MA. The library is open Monday through Thursday from 8:30 a.m. to 8:30 p.m.; Friday hours are 8:30 a.m. until noon. The library is closed on weekends.

To request a copy of the document, please call (781) 233–0050, fax (781–231–7345), or write Superintendent, Saugus Iron Works National Historic Site 244 Central Street, Saugus, MA 01906.

Marie Rust,

Regional Director, Northeast Region.

[FR Doc. 01–24636 Filed 10–1–01; 8:45 am]

BILLING CODE 4310–70–M

DEPARTMENT OF THE INTERIOR

National Park Service

Isle Royale National Park, MI

AGENCY: National Park Service, Interior.

ACTION: Notice of intent to prepare a wilderness management plan and environmental impact statement for Isle Royale National Park, Michigan.

SUMMARY: The National Park Service (NPS) will prepare a wilderness management plan and an environmental impact statement (EIS) for Isle Royale National Park, Michigan in accordance with section 102(2)(C) of the National Environmental Policy Act of 1969 (NEPA). This notice is being furnished as required by NEPA Regulations 40 CFR 1501.7.

To facilitate sound planning and environmental analysis, NPS intends to gather information necessary for the preparation of the EIS, and to obtain suggestions and information from other agencies and the public on the scope of issues to be addressed in the EIS. Comments and suggestions in this scoping process are invited.

This project was initiated in the autumn of 1999. The planning process originally included preparation of an environmental assessment. However, as planning has progressed NPS now believes it is appropriate to prepare an EIS. Public involvement during the first phases of planning has been facilitated through a series of newsletters with mail-back input forms.

DATES: Written comments and information concerning the scope of the EIS should be directed to the Superintendent, Isle Royale National Park, at the address below before November 2, 2001.

Persons who already have provided information through responses to project newsletters need not re-send that information. NPS will consider these comments in preparation of the EIS. However, persons who wish to reemphasize or expand on their previous comments are welcome to do so. Additional input also is invited.

ADDRESSES: Written comments and information concerning the scope of the EIS and other matters, or requests to be added to the project mailing list should be directed to: Superintendent, Isle Royale National Park, 800 East Lakeshore Drive, Houghton, Michigan 49931–1895. Telephone: 906–487–7140. E-mail: *isro_superintendent@nps.gov*

FOR FURTHER INFORMATION CONTACT: Superintendent, Isle Royale National Park, at the address or telephone above.

SUPPLEMENTARY INFORMATION: Congress designated more than 99 percent of the 133,000 acres landmass of Isle Royale National Park as wilderness in 1976. However, NPS never prepared a wilderness management plan to help guide decision making on wilderness-related matters. Comprehensive, long-term planning for the park's wilderness is needed to address:

(1) The management of visitor use, which during the peak season overwhelms facility capacities in campgrounds.

(2) The adoption, implementation, and refinement of resource and visitor experience indicators and related monitoring to ensure wilderness resources, values, and experiences are not being compromised.

(3) The adoption of a ''minimum tool'' decision framework for park operations within wilderness.

(4) Development of a new computerized permit/reservation system for camping permits.

(5) Specific directions for such diverse issues as campfires, trail maintenance, backcountry sanitation, interpretation and education in the wilderness, campground design, wildlife protection, acceptable signing, etc.

(6) Development of an implementation schedule to proactively plan for future projects in the wilderness.

The environmental review of the wilderness management plan for Isle Royale National Park will be conducted in accordance with requirements of NEPA (42 U.S.C. section 4371 *et seq.*), NEPA regulations (40 CFR 1500–1508), other appropriate Federal regulations, and NPS procedures and policies for compliance with those regulations.

James A. Loach,

Acting Regional Director.

[FR Doc. 01–24629 Filed 10–1–01; 8:45 am]

BILLING CODE 4310–70–P

DEPARTMENT OF THE INTERIOR

San Juan County Cattle Point Road Failure Environmental Impact Statement, San Juan Island National Historical Park, WA

AGENCY: National Park Service, Interior.

ACTION: Notice of intent to prepare an environmental impact statement (EIS) to address the impending failure of the San Juan County Cattle Point Road in San Juan Island National Historical Park, Washington.

SUMMARY: In Accordance with § 102(2)(C) of the National Environmental Policy Act of 1969 (Public Law 91–190), San Juan County (County) and the San Juan Island National Historical Park (SAJH) are initiating an environmental impact analysis process to address the impending failure of a portion of the County's Cattle Point Road, located within the boundaries of SAJH.

The portion of road that is of concern is a curve that extends for approximately 1,750 ft. in a generally east-west orientation along an engineered bench approximately halfway up a predominantly sand slope. The slope rises from the Strait of Juan de Fuca about 500 ft. to the south of the area where the road's stability is threatened to a height of up to 295 ft. above Mean Sea Level (MSL). The road traverses the slope at an elevation of approximately 140 to 150 ft. MSL. The lower portion of the slope, extending to within 50 ft. of the road, has been heavily eroded. According to estimates, the erosion appears to be at a rate that suggests failure of the roadbed may occur within a few years.

The EIS will identify and assess potential impacts of various alternatives to the existing Cattle Point Road to provide access to Cattle Point, a scenic area of San Juan Island that supports recreational use and a number of single-family residences. Notice is hereby given that the National Park Service and San Juan County will jointly prepare the EIS.

Comments: All interested persons, organizations, and agencies wishing to provide initial scoping comments about issues or concerns that should be addressed during the EIS process may send such information to Thomas Huse, Director, San Juan County Public Works Department, P.O. Box 729, Friday Harbor, WA 98250. Written comments should be postmarked no later than August 31, 2001.

In addition, public scoping sessions will be held after publication of this Notice, affording an additional early comment opportunity. Locations, dates, and times of these meetings will be provided in local and regional newspapers, and via the Internet at *www.nps.gov/sajh* or *www.co.san-juan.wa.us.* Inquiries regarding public meetings may be directed to the contacts listed below.

All comments received will become part of the public record and copies of comments, including any names and home addresses of respondents, may be released for public inspection. Individual respondents may request that their home addresses be withheld from the public record, which will be honored to the extent allowable by law. Requests to withhold names and/or addresses must be stated prominently at the beginning of the comments. Anonymous comments will not be considered. Submissions from organizations or businesses, and from individuals identifying themselves as representatives or officials of organizations or businesses, will be made available for public inspection in their entirety.

Because the responsibility for approving the EIS has been delegated to the National Park Service, the EIS is a ''delegated'' EIS. The responsible official for the National Park Service is John J. Reynolds, Regional Director, Pacific West Region, National Park Service. The responsible official for San Juan County is Laura Arnold, San Juan County Planning Director.

FOR FURTHER INFORMATION CONTACT: Thomas Huse, Director, San Juan County Public Works Department, P.O. Box 729, Friday Harbor, WA 98250, (360) 378–2114 or Cicely Muldoon, Superintendent, San Juan Island National Historical Park, P.O. Box 429, Friday Harbor, WA 98250, (360) 378–2240.

Dated: June 29, 2001.

Rory D. Westberg,

Superintendent, Columbia Cascades Support Office, Pacific West Region.

[FR Doc. 01–24628 Filed 10–1–01; 8:45 am]

BILLING CODE 4310–70–P

DEPARTMENT OF THE INTERIOR

National Park Service

National Register of Historic Places; Notification of Pending Nominations

Nominations for the following properties being considered for listing in the National Register were received by the National Park Service before July 21, 2001. Pursuant to section 60.13 of 36 CFR part 60 written comments concerning the significance of these properties under the National Register criteria for evaluation may be forwarded to the National Register, National Park Service, 1849 C St. NW, NC400, Washington, DC 20240. Written comments should be submitted by October 17, 2001.

Carol D. Shull,

Keeper of the National Register of Historic Places.

ARIZONA

Maricopa County

Lehi School, 2345 No. Home, Mesa, 01000906

Mohave County

Hardyville Cemetery, 1776 AZ 95, Bullhead City, 01000905

Pinal County

Verdugo Homestead Historic District, Address Restricted, Randolph, 01000904

IOWA

Clayton County

American House, 116 Main St., McGregor, 01000913

Clinton County

Dugan's Saloon, 516 Smith St., Grand Mound, 01000908

Farmers and Merchants Savings Bank, 601 Smith St., Grand Mound, 01000909

Grand Mound Town Hall and Waterworks Historic District, 613–615 Clinton St., Grand Mound, 01000910

Johnson County

Englert Theatre, 221 E. Washington St., Iowa City, 01000911

Louisa County

Commercial Hotel, 227 N. Main St., Wapello, 01000912

Polk County

Crane Building, 1440 Walnut, Des Moines, 01000914

MASSACHUSETTS

Bristol County

Barrows, H.F., Manufacturing Company Building, 102 S. Washington St., N. Attleborough, 01000907

Essex County

Georgetown Central School, 1 Library St., Georgetown, 01000915

MISSISSIPPI

De Soto County

Hernando Commercial Street Historic District, Roughly along Commerce St., W of West St. S, Hernando, 01000918

Hernando North Side Historic District, N of Holly Springs St., E of US 51, W of Northview St., on W. Northern St., W. Valley St., Shady Ln. & Holly Springs St, Hernando, 01000916

Hernando South Side (Magnolia) Historic District, Roughly bounded by Oak Grove Rd., Magnolia Dr., W. Center St., and Church St., Hernando, 01000917

Marshall County

Bailey, Dr. Isham G., House, 1577 Early Grove Rd., Lamar, 01000919

Warren County

Hyland Mound Archeological Site, Address Restricted, Vicksburg, 01000920

MONTANA

Lewis and Clark County

Hilger, Joe and Carrie, Ranch, Sleeping Giant Ranch, 20 mi. N of Helena, Helena, 01000922

Stillwater County

Torgrimson Place, West Rosebud Rd., Fishtail, 01000921

NORTH DAKOTA

Ramsey County

Devils Lake Masonic Temple, 403 Sixth St., Devils Lake, 01000923

OREGON

Deschutes County

First Presbyterian Church of Redmond, 641 SE Cascade Ave., Redmond, 01000931

Multnomah County

Hughes, Dr. Herbert H., House, 1229 W. Powell Blvd., Gresham, 01000932
Kenton Commercial Historic District, (Kenton Neighborhood of Portland, Oregon MPS) Roughly along Denver Ave., from N. Willis St. to N. Watts St., Portland, 01000934
McGraw, Donald and Ruth, House, 01845 SW Military Rd., Portland, 01000935
Meier and Frank Delivery Depot, 1417 NW Everett, Portland, 01000936
Van Vleet, Lewis and Elizabeth, House, (Eliot Neighborhood MPS) 202 NE Graham St., Portland, 01000937

Union County

La Grande Commercial Historic District, Roughly bounded by UP RR tracts along Jefferson St., Greenwood and Cove Sts., Washington St., & Fourth St., La Grande, 01000933

PENNSYLVANIA

Bucks County

Waldenmark, 1280 & 1300 Wrightstown Rd., Wrightstown Township, 01000924

Chester County

Pottstown Landing Historic District, Roughly bounded by US 422 By-Pass, Whartnaby St. 633 Laurelwood Rd. and Reiff St., North Coventry, 01000927

Philadelphia County

Harris Building, 2121–41 Market St., Philadelphia, 01000928

Wayne County

Starlight Station, New York, Ontario, and Western Railway, O & W Rd. NE of Depot Hill Rd, Starlight, Buckingham Township, 01000925

York County

Springdale Historic District, Bounded by S. George St., Lombardy Alley, S. Queen St., and Rathon Rd., York, 01000926

TENNESSEE

Montgomery County:

First Presbyterian Church Manse, 305 Main St., Clarksville, 01000929

WYOMING

Weston County

Weston County Courthouse, 1 West Main, Newcastle, 01000930

[FR Doc. 01–24630 Filed 10–1–01; 8:45 am]

BILLING CODE 4310–70–P

DEPARTMENT OF THE INTERIOR

National Park Service

National Register of Historic Places; Notification of Pending Nominations

Nominations for the following properties being considered for listing in the National Register were received by the National Park Service before August 4, 2001. Pursuant to section 60.13 of 36 CFR part 60 written comments concerning the significance of these properties under the National Register criteria for evaluation may be forwarded to the National Register, National Park Service, 1849 C St. NW, NC400, Washington, DC 20240. Written comments should be submitted by October 17, 2001.

Carol D. Shull,

Keeper of the National Register of Historic Places.

ALASKA

Fairbanks North Star Borough—Census Area

Illinois Street Historic District, 300–700 Illinois St., Fairbanks, 01000966

Haines Borough—Census Area

Anway, Charlie, Cabin, Mile 1.5 Haines Hwy., Haines, 01000967

CALIFORNIA

Plumas County

Red Dog Townsite, Address Restricted, Nevada City, 01000968

COLORADO

Boulder County

Boulder County Poor Farm, Address Restricted, Boulder, 01000969

Larimer County

Livermore Hotel and General Store, 2160 Red Feather Lakes Rd., Livermore, 01000970

GEORGIA

Fulton County

Inman Park Historic District (Boundary Increase and Decrease), Roughly bounded by Lake, Hurt, and DeKalb Aves., and Krog St., Atlanta, 01000973
Whittier Mills Historic District, Roughly the jct. of Bolton Rd. and Parrot Ave., approx. 7 mi. NW of central business district of Atlanta, Atlanta, 01000972

McIntosh County

West Darien Historic District, Bounded by 8th St., US 17, Darien River, and Cathead Creek, Darien, 01000975

Newton County

Porterdayle Historic District, Roughly the city limits of Porterdale north of Elm St., Porterdale, 01000974

Troup County

Lagrange Commercial Historic District, (Georgia County Courthouses TR) Main St.—Ridley Ave., Bull St.—Church St., Broad and Greenville Sts., Vernon Rd.—LaFayette Pkwy, Haralson St., LaGrange, 01000971

IDAHO

Ada County

Ninth Street Bridge, (Metal Truss Highway Bridges of Idaho MPS) E of new 9th Street bridge, over Boise R., Boise, 01000980

Idaho County

Riggins Motel, 615 S ID 95, Riggins, 01000979

ILLINOIS

Vermilion County

Fischer Theater, 158–164 N. Vermillion St., Danville, 01000978

INDIANA

Delaware County

Wilson Junior High School, (Indiana's Public Common and High Schools MPS) 2000 S. Franklin St., Muncie, 01000992

Hamilton County

Catherine Street Historic District, Roughly bounded by Harrison, Clinton, west side of 9th and east side of 10th, Noblesville, 01000988
South 9th Street Historic District, Roughly bounded by Maple, Division, 10th, and the west side of 9th St., Noblesville, 01000982

Johnson County

Furnas Mill Bridge, Pisgah Rd. over Sugar Creek—Atterbury Fish and Wildlife Area, Edinburgh, 01000985

Lagrange County

St. James Memorial Chapel, IN 9, just S of Cty Rd. 600 N., Howe, 01000989

Marion County

Jamieson—Bennett House, 8452 Green Braces North Dr., Indianapolis, 01000984

Marshall County

Argos Downtown Historic District, W side of Michigan St, bet. Smith and Williams, E side bet. Smith and Walnut, Argos, 01000991

Montgomery County

Bethel AME Church of Crawfordsville, 213 W. North St., Crawfordsville, 01000990

Morgan County

Elm Spring Farm, 1 mi. N of Bain Rd. on Goose Creek Rd., Martinsville, 01000981

Lake Ditch Bridge, Jct. of Lake Ditch and Lake Ditch Rd., Monrovia, 01000986

Orange County

Dixie Garage, IN 56 and Sinclair Ave., West Baden Springs, 01000983
Oxford Hotel, In 56, West Baden Springs, 01000977

St. Joseph County

South Bend Brewing Association, 1636 Lincolnway West, South Bend, 01000987
South Bend Remedy Company Building, 501 W. Colfax, South Bend, 01000993

Tippecanoe County

Jefferson Historic District, Roughly bounded by 9th, Erie, Elizabeth, and Ferry Sts., Lafayette, 01000976

IOWA

Linn County

Redmond Park—Grande Avenue Historic District, (Cedar Rapids, Iowa MPS) Roughly bounded by US 151, Nineteenth St., and Washington Ave., Cedar Rapids, 01000994

LOUISIANA

Bienville Parish

Conly Site, Address Restricted, Ringgold, 01000995

NEW YORK

Livingston County

Caledonia House Hotel, 3141 State St., Caledonia, 01000997

Schuyler County

First Baptist Church of Watkins Glen, Fifth St. and Porter St., Watkins Glen, 01000996

SOUTH DAKOTA

Brule County

Chamberlain Bridge, (Historic Bridges in South Dakota MPS) I–90 Loop over Missouri R, Chamberlain, 01000999

Clay County

Linden House, 509 Linden Ave., Vermillion, 01001001

Lincoln County

Rudolph—Parke House, 412 E. First St., Canton, 01001000

TEXAS

Dallas County

Strain Farm—Strain, W.A., House (Boundary Increase), 400 Lancaster-Hutchins Rd., Lancaster, 01001002

[FR Doc. 01–24631 Filed 10–1–01; 8:45 am]

BILLING CODE 4310–70–P

DEPARTMENT OF THE INTERIOR

National Park Service

National Register of Historic Places; Notification of Pending Nominations

Nominations for the following properties being considered for listing in the National Register were received by the National Park Service before July 28, 2001. Pursuant to section 60.13 of 36 CFR Part 60 written comments concerning the significance of these properties under the National Register criteria for evaluation may be forwarded to the National Register, National Park Service, 1849 C St. NW, NC400, Washington, DC 20240. Written comments should be submitted by October 17, 2001.

Carol D. Shull,

Keeper of the National Register of Historic Places.

ALASKA

Anchorage Borough—Census Area

Spring Creek Lodge, 18939 Old Glen Hwy., Chugiak, 01000938

COLORADO

Denver County

Denver Tramway Powerhouse, 1416 Platte St., Denver, 01000940

CONNECTICUT

Windham County

Cady—Copp House, 115 Liberty Hwy, Putnam, 01000939

GEORGIA

Madison County

Colbert School, Jct. of Fourth St. and First Ave., Colbert, 01000942

Taylor County

Union Methodist Church Cemetery—Hays Campground Cemetery, Union Church Rd., Butler, 01000941

LOUISIANA

St. Mary Parish

Boy Scout Troop #1 Log Cabin, 601 Adams, Franklin, 01000944

Terrebonne Parish

Residence Plantation House, 8951 Park Ave., Houma, 01000943

MINNESOTA

Rice County

Trondhjem Norwegian Lutheran Church, 8501 Garfield Ave., Webster, 01000945

MISSISSIPPI

Oktibbeha County

Meadow Woods Plantation House, 2479 Oktoc Rd., Starkville, 01000946

MISSOURI

St. Louis Independent City

St. Boniface Neighborhood Historic District, Roughly bounded by Koeln and Tesson Sts., Broadway, and Alabama Ave., St. Louis (Independent City), 01000948
Tower Grave Heights Historic District, Bounded by Arsenal St., Grant Ave., McDonald Ave., and Gustine Ave., St. Louis (Independent City), 01000947

OKLAHOMA

Grady County

Oklahoma College for Women Historic District, Roughly bounded by Grand Ave., 19th St., Alabama Ave., and alley west of 15th St., Chickasha, 01000950

Nowata County

Cemetery Patent 110, Cty Rd. 412, 3.25 mi. N of jct. with US 60, Delaware, 01000951

Oklahoma County

First Church of Christ, Scientist, 1200 N. Robinson Ave., Oklahoma City, 01000949

PENNSYLVANIA

Berks County

Trexler Historic District, 375–424 Old Philadelphia Pike, Albany Township, 01000957

Centre County

Pennsylvania Match Company, 367 Phoenix Ave., Bellefonte, 01000954

Chester County

Welkinweir, 1368 Prizer Rd., East Nantmeal Township, 01000953

Lancaster County

Lancaster City Historic District, Roughly bounded by Liberty St., Broad St., Greenwood Ave., Race Ave., Lancaster, 01000956

York County

Chestnut Hill, 1105 Windsor Rd., Windsor Township, 01000952

TENNESSEE

Obion County

Washington Avenue and Florida Avenue Historic District, Located along Washington and Florida Aves., bet. 3rd and 5th Sts., Union City, 01000955

UTAH

Millard County

Robins, Merien, and Rosabelle, House, 110 West 200 North, Scipio, 01000962

Salt Lake County

Centennial Home, 307 Virginia St., Salt Lake City, 01000960
Holt, Samuel and Geneva, Farmstead, 10317 South 1300 West, South Jordan, 01000963
Iris Theater, Apartments and Commercial Building, (Murray City, Utah MPS) 4861 S. State St., Murray, 01000959
Westminster College President's Jpise, 1733 South 1300 East, Salt Lake City, 01000961

Summit County

Beech, Thomas and Jane, House, 47 West 50 South, Coalville, 01000958

WISCONSIN

Milwaukee County

Lawson Airplane Company—Continental Faience and Tile Company, 909 Menomonee Ave., South Milwaukee, 01000964

WYOMING

Converse County

Officer's Club, Douglas Prisoner of War, 115 S. Riverbend Dr., Douglas, 01000965

A correction has been requested for the following resource:

MASSACHUSETTS

Hampshire County

Parsons, Shepherd and Damon Houses Historic District 46, 58, and 66 Bridge St. Northampton, 01000627

[FR Doc. 01–24632 Filed 10–1–01; 8:45 am]

BILLING CODE 4310–70–P

DEPARTMENT OF THE INTERIOR

National Park Service

National Register of Historic Places; Notification of Pending Nominations

Nominations for the following properties being considered for listing in the National Register were received by the National Park Service before August 11, 2001. Pursuant to section 60.13 of 36 CFR part 60 written comments concerning the significance of these properties under the National Register criteria for evaluation may be forwarded to the National Register, National Park Service, 1849 C St. NW, NC400, Washington, DC 20240. Written comments should be submitted by October 17, 2001.

Carol D. Shull,

Keeper of the National Register Of Historic Places.

DELAWARE

Kent County

Durham—Shores House, (House and Garden in Central Delaware MPS) E side of DE 15, Dupont Station, 01001005

White—Warren Tenant House, (House and Garden in Central Delaware MPS) NE side of DE 261, Sandtown, 01001009

New Castle County

Grose, Robert, House, (House and Garden in Central Delaware MPS) 1000 Port Penn Rd., Port Penn, 01001006

DISTRICT OF COLUMBIA

District of Columbia

Downtown Historic District, Roughly, Seventh St. from Pennsylvania Ave. to Mt. Vernon Sq., and F St. bet. Eleventh and Seventh Sts., NW, Washington, 01001004

FLORIDA

Collier County

Everglades Laundry, 105 W. Broadway, Everglades City, 01001012

Palm Beach County

Historic Old Town Commercial District, Bounded by FEC, M St., Lucerne Ave., and 1st Ave. S, Lake Worth, 01001011

Seminole County

Browne—King House, 322 King St., Oviedo, 01001023

Estes, R.W. Celery Company Precooler Historic District, 159 N. Central Ave., Oviedo, 01001022

Nelson and Company Historic District, 110–166 E Broadway St. and 30–110 Station St., Oviedo, 01001010

Wheeler—Evans House, 340 S. Lake Jesup Ave., Oviedo, 01001024

IOWA

Muscatine County

Greenwood Cemetery Chapel, 1814 Lucas, Muscatine, 01001013

MICHIGAN

Calhoun County

Marshall Avenue Bridge, Marshall Ave. over Rice Cr., Marshall, 01001021

Crawford County

Douglas House, 6122 E Cty Rd. 612, Lovells Township, 01001017

Huron County

Smith—Culhane House, 8569 Lake St., Port Austin, 01001015

Ionia County

St. John the Baptist Catholic Church Complex, 324 S. Washington Ave., Hubbardston, 01001019

Iosco County

Five Channels Dam Archeological District, Address Restricted, Oscoda, 01001016

Kent County

Porter Hollow Embankment and Culvert, White Pine Strail at Stegman Creek, W of Summit Ave., Algoma Township, 01001018

Lenawee County

Keeney, John W. and Erena Alexander Rogers, Farm, 5300 Monroe, Franklin Township, 01001020

MONTANA

Missoula County

Eagle Guard Station, 11 mi. W of Townsend, Townsend, 01001014

NEW YORK

Essex County

Poke-O-Moonshine Mountain Fire Observation Station, (Fire Observation Stations of New York State Forest Preserve MPS) Poke-O-Moonshine Mountain, Chesterfield, 01001034

Franklin County

Azure Mountain Fire Observation Station, (Fire Observation Stations of New York State Forest Preserve MPS) Azure Mountain, Waverly, 01001036

Fulton County

Kane Mountain Fire Observation Station, (Fire Observation Stations of New York State Forest Preserve MPS) Kane Mountain, Caroga, 01001033

Hamilton County

Blue Mountain Fire Observation Station, (Fire Observation Stations of New York State Forest Preserve MPS) Blue Mountain, Indian Lake, 01001035

Snowy Mountain Fire Observation Station, (Fire Observation Stations of New York State Forest Preserve MPS) Snowy Mountain, Indian Lake, 01001031

Saratoga County

Hadley Mountain Fire Observation Station, (Fire Observation Stations of New York State Forest Preserve MPS) Hadley Mountain, Hadley, 01001037

St. Lawrence County

Arab Mountain Fire Observation Station, (Fire Observation Stations of New York State Forest Preserve MPS) Arab Mountain, Piercefield, 01001039

Ulster County

Balsam Lake Mountain Fire Observation Station, (Fire Observation Stations of New York State Forest Preserve MPS) Balsam Lake Mountain, Hardenburgh, 01001038

Mount Tremper Fire Observation Station, (Fire Observation Stations of New York State Forest Preserve MPS) Mount Tremper, Shandaken, 01001032

Red Hill Fire Observation Station, (Fire Observation Stations of New York State Forest Preserve MPS) Red Hill, Denning, 01001030

NORTH CAROLINA

Alamance County

Cates, Charles F. and Howard, Farm, 4870 Mebane Rogers Rd., Mebane, 01001025

Ashe County

Cooper, A.S., Farm, Cranberry Springs Rd., approx. 0.2 mi. SE of jct. with Todd RR Grade Rd., Brownwood, 01001028

Miller Homestead, 324 Miller Dr., Lansing, 01001029

Buncombe County

Engadine, US 19/23, 0.3 mi. E of Haywood, Chandler, 01001027

Cabarrus County

Meek House, NC 1624, 0.3 mi. NE of jct. with NC 1622, Kannapolis, 01001026

OHIO

Franklin County

Westminster Church, 77 S. 6th St., Columbus, 01001043

Mahoning County

Wick Park Historic District (Boundary Increase), Roughly bounded by Broadway Ave., Wick Ave., Madison Ave., and Elm St., Youngstown, 01001041

Richland County

Richland County Infirmary, 3220 Mansfield-Olivesburg Rd., Mansfield, 01001042

Washington County

Marietta Historic District (Boundary Decrease), Roughly bounded by the Muskingum and Ohio Rivers, and Warren, 3rd, 5th, and 6th Sts., Marietta, 01001040

WISCONSIN

Dane County

Fort Blue Mounds, Address Restricted, Blue Mounds, 01001044

A request for REMOVAL has been made for the following resource:

ALABAMA

Coosa County

Oakachoy Covered Bridge Over Oakachoy Cr. W of SR 259 Nixburg, 90000928

[FR Doc. 01–24633 Filed 10–1–01; 8:45 am]

BILLING CODE 4310–70–P

DEPARTMENT OF THE INTERIOR

National Park Service

National Register of Historic Places; Notification of Pending Nominations

Nominations for the following properties being considered for listing in the National Register were received by the National Park Service before August 18, 2001. Pursuant to section 60.13 of 36 CFR part 60 written comments concerning the significance of these properties under the National Register criteria for evaluation may be forwarded to the National Register, National Park Service, 1849 C St. NW, NC400, Washington, DC 20240. Written comments should be submitted by October 17, 2001.

Carol D. Shull,

Keeper of the National Register of Historic Places.

ALASKA

Southeast Fairbanks Borough-Census Area

Chicken Historic District, Mi. 66.5 Taylor Hwy., Eagle, 01001053

COLORADO

Denver County

Leeman Auto Company Building, 550 Broadway, Denver, 01001054

Kiowa County

Sand Creek Massacre Site, Near jct. of Cty Rd. 54 and Cty Rd. W, Eads, 01001055

FLORIDA

Duval County

Mandarin Store and Post Office, 12471 Mandarin Rd., Jacksonville, 01001056

Pasco County

Zephyrhills Downtown Historic District, Roughly bounded by South Ave., 9th Ave., 7th St. and 11th St., Zephyrhills, 01001058

Pinellas County

Kress, S.H., and Company Building, 475 Central Ave., St. Petersburg, 01001057

IOWA

Polk County

Syndicate Block, 501 E. Locust, Des Moines, 01001059

MASSACHUSETTS

Dukes County

Gay Head—Aquinnah Town Center Historic District (Boundary Increase), South Rd., Totem Pole Way and Jeffers Way, Aquinnah, 01001060

Middlesex County

Pleasand Street Historic District, 187–235 Pleasant St., Marlborough, 01001061

OHIO

Lawrence County

Burlington 37 Cemetery, (Underground Railroad in Ohio MPS) Center St., Burlington, 01001064

Preble County

Bunker Hill House, 7919 OH 177, Fairhaven, 01001062

Seneca County

Fostoria Downtown Historic District, Roughly bounded by North St., South St. and the alleys E and W of Main St. Fostoria, 01001065

Summit County

Glendale Cemetery, 150 Glendale Ave., Akron, 01001063

OREGON

Linn County

Moore, John and Mary, House, 320 Kirk Ave., Brownsville, 01001066

Marion County

Salem Downtown State Street—Commerical Street Historic District, Roughly bounded by Ferry, High, Chemeketa, and Fronts Sts., Salem, 01001067

Multnomah County

Costello, James C. and Mary A., House, 2043 NE Tillamook, Portland, 01001068

PUERTO RICO

San Juan Municipality

Edificio Aboy, 603 Aboy St., San Juan, 01001069

[FR Doc. 01–24634 Filed 10–1–01; 8:45 am]

BILLING CODE 4310–70–P

DEPARTMENT OF THE INTERIOR

National Park Service

National Register of Historic Places; Notification of Pending Nominations

Nominations for the following properties being considered for listing in the National Register were received by the National Park Service before August 25, 2001. Pursuant to section 60.13 of 36 CFR part 60 written comments concerning the significance of these properties under the National Register criteria for evaluation may be forwarded to the National Register, National Park Service, 1849 C St. NW, NC400, Washington, DC 20240. Written comments should be submitted by October 17, 2001.

Beth Savage,

Acting, Keeper of the National Register Of Historic Places.

MICHIGAN

Lenawee County

Palmer, Lorenzo and Ruth Wells, House, 760 Maple Grove Ave., Hudson, 01001070

NORTH CAROLINA

Buncombe County

Adams, Judge Junius G., House, 11 Stuyvesant Rd., Biltmore Forest, 01001077

Caswell County

Wildwood, 5680 Stephenton Rd., Semora, 01001076

Chowan County

Edenton Historic District (Boundary Increase), Both sides 300 block E. King St., Edenton, 01001075

Davidson County

Mor-Val Hosiery Mill, N. Main and E. First Sts., Denton, 01001074

Davie County

Cana Store and Post Office, NC 1411, 0.2 mi. N of NC 1406, Mocksville, 01001073

Forsyth County

Clayton Family Farm, 5809 Stanley Dr., Stanleyville, 01001072

Macon County

Playmore—Bowery Road Historic District, 1309–1311 Horse Cove Rd., 7,215,225,369,455 and 172–176,200,462 Bowery Rd., and 375–471 Upper Lake Rd., Highlands, 01001071

SOUTH DAKOTA

Bon Homme County

Metzgers, William, New Emporium, 1610 Main St., Tyndall, 01001079

Yankton County

Our Savior's Lutheran Church, 29219 431st Ave., Menno, 01001078

TENNESSEE

McMinn County

Chesnutt, James W., House, 105 A S. Niota Rd., Englewood, 01001081

UTAH

Salt Lake County

Salt Lake Hardware Company Warehouse, 155 N 400 W, Salt Lake City, 01001082

WASHINGTON

King County

Olson, Mary, Farm, 28728 Green River Rd. S., Kent, 01001080

A request for Removal has been made for the following Resource:

MISSOURI

Greene County

Second Baptist Church (Washington Avenue Baptist), 729 North Washington, Springfield, 00001620

[FR Doc. 01–24635 Filed 10–1–01; 8:45 am]

BILLING CODE 4310–70–P

DEPARTMENT OF THE INTERIOR

Bureau of Reclamation

San Luis Unit Feature Reevaluation, Central Valley Project, CA

AGENCY: Bureau of Reclamation, Interior.

ACTION: Notice of intent to prepare an environmental impact statement (EIS).

SUMMARY: The Department of the Interior, Bureau of Reclamation (Reclamation), will prepare an EIS, pursuant to the National Environmental Policy Act (NEPA), to evaluate proposed actions to provide long-term drainage service to the San Luis Unit (SLU) of the Central Valley Project (CVP). Proposed drainage service alternatives will be selected on the basis of criteria adopted to maintain environmental quality and provide for continued agricultural production in a manner consistent with the *Plan of Action* filed April 18, 2001, in *Sumner Peck Ranch, Inc., et al.,* v. *Bureau of Reclamation, et al.*

DATES: Two scoping meetings will be held to solicit comments from interested parties to assist in determining the scope of the environmental analysis and to identify the significant issues related to this proposed action. The meeting dates are:

- Wednesday, November 14, 2001, 10 a.m. to 12 p.m., Fresno, California
- Thursday, November 15, 2001, 1:30 p.m. to 3:30 p.m., Concord, California

Written comments on the scope of the environmental document should be mailed to Reclamation at the address below by November 30, 2001.

ADDRESSES: The meeting locations are as follows:

- Fresno at Piccadilly Inn University, Broadmoor Room, 4961 N. Cedar Avenue
- Concord at Hilton Hotel, Seminar 4 Room, 1970 Diamond Boulevard

Written comments on the scope of the alternatives and impacts to be considered should be sent to Mr. Michael Delamore, Bureau of Reclamation, South-Central California Area Office, 1243 N Street, Fresno CA 93721–1813; or by telephone at (559) 487–5039; or faxed to (559) 487–5130 (TDD 559–487–5933).

FOR FURTHER INFORMATION CONTACT: Mr. Jason Phillips, Bureau of Reclamation, Division of Planning, 2800 Cottage Way, Sacramento, CA 95825 or by telephone at (559) 487–5070 (TDD 916–978–5608).

SUPPLEMENTARY INFORMATION: The Act of June 3, 1960 (Pub. L. No. 88–488), which authorized the construction, operation, and maintenance of the SLU, provided for the construction of San Luis Dam, San Luis Canal, Coalinga Canal, San Luis Drain (SLD), distribution systems, drains, pumping facilities, and other appurtenant works. The authorization provided for joint development with the State of California. The State agreed to provide 55 percent of the construction, operation, and maintenance costs of the main project facilities and agreed to operate those facilities as a part of both the CVP and the California State Water Project. SLU construction started in 1963 and the first significant water deliveries began in 1968. SLU facilities can provide about 1.4 million acre-feet of water annually to CVP water users. With the implementation of the Central Valley Project Improvement Act and Endangered Species Act protections, the actual average deliveries have been reduced by nearly 50 percent. Initial SLU project planning recognized the need to provide drainage service to protect lands from rising water tables and accumulation of salts which would otherwise render the soil unsuitable for farming. The authorizing legislation provided for the construction of an interceptor drain that would serve the SLU area and discharge to the Sacramento-San Joaquin Delta. Reclamation began construction of the SLD in 1968. By 1975, 83 miles of the planned 188-mile SLD had been completed, and 1,283 acres of shallow ponds (later named Kesterson Reservoir) were constructed about 80 miles south of the Delta to provide temporary storage to facilitate future control of the SLD flow into the Delta. Construction was then suspended pending determination of the final point of discharge for the SLD. During the ensuing years, Kesterson Reservoir received drain water and functioned as an evaporation facility while studies and investigations continued concerning a final point of discharge. In 1984, waterfowl deaths and deformities at Kesterson were linked to elevated levels of selenium in the food chain. In 1985, the State Water Resources Control Board directed Reclamation to clean up and abate the conditions at Kesterson. The Department of the Interior announced that Kesterson would be closed, and a phased elimination of SLD discharges was completed by June 1986.

In 1990, the San Joaquin Valley Drainage Program (SJVDP) published A Management Plan For Agricultural Subsurface Drainage and Related Problems on the Westside San Joaquin Valley. This report, which was prepared based on a major State-Federal interagency investigation of the drainage problems, recommended a series of ''in-valley'' drainage management actions. In 1991, pursuant to a stipulated judgment in a lawsuit regarding the rights and responsibilities of CVP water users in Westlands Water District, Reclamation published a Draft Environmental Impact Statement on a proposed drainage plan for the SLU that was based on and consistent with the SJVDP report recommendations. That plan, however, was not finalized. In a subsequent lawsuit, (*Sumner Peck Ranch* v. *Bureau of Reclamation*), the Court directed Reclamation to apply to the California State Water Resources Control Board for a discharge permit in order to complete the SLD to the Sacramento-San Joaquin Delta as was contemplated in Pub. L. No. 88–488. Upon appeal to the 9th Circuit Court of Appeals, the Appellate Court affirmed the District Court's conclusion that the United States must act promptly to provide drainage service, but reversed that part of the District Court judgment that foreclosed non-interceptor drain solutions.

Reclamation has been engaged for many years with other State and Federal agencies as well as farmers, water districts, and stakeholders, to develop effective, affordable, and implementable drainage service and drainage management solutions. Several of these efforts have resulted in innovative and promising drainage management techniques, and Reclamation is committed to continuing to support development of those approaches. However, the only proven technologies that have been identified to date to provide long-term drainage service and achieve sustainable salt balance on drainage-affected, irrigated lands in Westlands Water District are disposal of salts out of valley via completion and operation of the SLD or disposal to evaporation ponds. Therefore, alternatives incorporating those technologies, as well as other approaches identified during scoping, will be considered in the analysis.

The environmental review will be conducted pursuant to NEPA, the Endangered Species Act and other applicable laws, to analyze the potential environmental impacts of implementing

each of the feasible alternative means of providing drainage service to lands within the SLU. All reasonable alternatives as required by NEPA and its implementing regulations will be examined. Draft EISs prepared in the early 1980's and in 1991 for drainage solutions to the SLU will provide a useful beginning, thus allowing Reclamation to expedite completion of the analysis. Alternatives, with their related designs and cost estimates identified in these earlier efforts, will be re-evaluated and updated to reflect current conditions. Public input on additional alternatives, or combinations of alternatives, that should be considered will be sought through the initial scoping meetings. In addition, public input will be sought on the criteria that should be used to carry forward alternatives, or combination of alternatives, for further consideration.

Our practice is to make comments, including names and home addresses of respondents, available for public review. Individual respondents may request that we withhold their home address from public disclosure, which we will honor to the extent allowable by law. There also may be circumstances in which we would withhold a respondent's identity from public disclosure, as allowable by law. If you wish us to withhold your name and/or address, you must state this prominently at the beginning of your comment. We will make all submissions from organizations or businesses, and from individuals identifying themselves as representatives or officials of organizations or businesses, available for public disclosure in their entirety

Dated: September 14, 2001.

Laura Allen,

Deputy Regional Environmental Officer.

[FR Doc. 01–24564 Filed 10–1–01; 8:45 am]

BILLING CODE 4310–MN–P

INTERNATIONAL TRADE COMMISSION

[Investigations Nos. 731–TA–919–920 (Final)]

Certain Welded Large Diameter Line Pipe from Japan and Mexico

AGENCY: United States International Trade Commission.

ACTION: Revised schedule for the subject investigations.

SUMMARY: The Commission is revising its schedule for the subject investigations as follows: the hearing will be held at the U.S. International Trade Commission Building at 9:30 a.m. on October 9, 2001; the deadline for filing posthearing briefs is October 15, 2001; the Commission will make its final release of information on October 19, 2001; and final party comments are due on October 23, 2001.

EFFECTIVE DATE: September 26, 2001.

FOR FURTHER INFORMATION CONTACT: Tim Timberlake (202–205–3188), Office of Investigations, U.S. International Trade Commission, 500 E Street SW, Washington, DC 20436. Hearing-impaired persons can obtain information on this matter by contacting the Commission's TDD terminal on 202–205–1810. Persons with mobility impairments who will need special assistance in gaining access to the Commission should contact the Office of the Secretary at 202–205–2000. Media should contact Peg O'Laughlin (202–205–1819), Office of External Relations. General information concerning the Commission may also be obtained by accessing its internet server (*http://www.usitc.gov*). The public record for these investigations may be viewed on the Commission's electronic docket (EDIS-ON-LINE) at *http://dockets.usitc.gov/eol/public*.

For further information concerning these investigations see the Commission's notice cited above and the Commission's Rules of Practice and Procedure, part 201, subparts A through E (19 CFR part 201), and part 207, subparts A and C (19 CFR part 207).

Authority: These investigations are being conducted under authority of title VII of the Tariff Act of 1930; this notice is published pursuant to § 207.21 of the Commission's rules.

Issued: September 26, 2001.

By order of the Commission.

Donna R. Koehnke,

Secretary.

[FR Doc. 01–24625 Filed 10–1–01; 8:45 am]

BILLING CODE 7020–02–P

DEPARTMENT OF LABOR

Occupational Safety and Health Administration

[Docket No. ICR–1218–0131 (2001)]

Standard Entitled ''Occupational Exposure to Hazardous Chemicals in Laboratories''; Extension of the Office of Management and Budget's (OMB) Approval of the Information-Collection (Paperwork) Requirements

AGENCY: Occupational Safety and Health Administration (OSHA), Labor.

ACTION: Request for comments.

SUMMARY: OSHA solicits comments concerning its proposal to increase the total burden-hour estimate for, and to extend OMB approval of, the collection-of-information requirements specified by the standard entitled ''Occupational Exposure to Hazardous Chemicals in Laboratories'' (29 CFR 1910.1450).[1]

DATES: Submit written comments on or before December 3, 2001.

ADDRESSES: Submit written comments to the Docket Office, Docket No. ICR–1218–0131 (2001), OSHA, U.S. Department of Labor, Room N–2625, 200 Constitution Avenue, NW, Washington DC 20210; telephone (202) 693–2350. Commenters may transmit written comments of 10 pages or less by facsimile to (202) 693–1648.

FOR FURTHER INFORMATION CONTACT: Todd Owen, Directorate of Policy, OSHA, U.S. Department of Labor, Room N–3641, 200 Constitution Avenue, NW., Washington, DC 20210; telephone (202) 693–2444. A copy of the Agency's Information-Collection Request (ICR) supporting the need for the information collections specified by the standard entitled ''Occupational Exposure to Hazardous Chemicals in Laboratories'' is available for inspection and copying in the Docket Office, or by requesting a copy from Todd Owen at (202) 693–2444. For electronic copies of the ICR contact OSHA on the Internet at *http://www.osha.gov/comp-links.html*, and select ''Information Collection Requests.''

SUPPLEMENTARY INFORMATION:

I. Background

The Department of Labor, as part of its continuing effort to reduce paperwork and respondent (*i.e.*, employer) burden, conducts a preclearance consultation program to provide the public with an opportunity to comment on proposed and continuing information-collection requirements in accordance with the Paperwork Reduction Act of 1995 (PRA–95) (44 U.S.C. 3506(c)(2)(A)). This program ensures that information is in the desired format, reporting burden (time and cost) is minimal, collection instruments are understandable, and OSHA's estimate of the information-collection burden is correct.

The standard entitled ''Occupational Exposure to Hazardous Chemicals in

[1] Based on its assessment of the paperwork requirements contained in this standard, the Agency estimates that the total burden hours increased compared to its previous burden-hour estimate. Under this notice, OSHA is *not* proposing to revise these paperwork requirements in any substantive manner, only to increase the burden hours imposed by the existing paperwork requirements.

Laboratories'' (§ 1910.1450; the ''Standard'') applies to laboratories that use hazardous chemicals in accordance with the Standard's definitions for ''laboratory use of hazardous chemicals'' [2] and ''laboratory scale.'' [3] The Standard requires these laboratories to maintain employee exposures at or below the permissible exposure limits specified for the hazardous chemicals in 29 CFR part 1910, subpart Z. They do so by developing a written Chemical Hygiene Plan (CHP) that describes: Standard operating procedures for using hazardous chemicals; hazard-control techniques; equipment-reliability measures; employee information-and-training programs; conditions under which the employer must approve operations, procedures, and activities before implementation; and medical consultations and examinations. The CHP also designates personnel responsible for implementing the CHP, and specifies the procedures used to provide additional protection to employees exposed to particularly hazardous chemicals.

Other information-collection requirements of the Standard include: Documenting exposure-monitoring results; notifying employees in writing of these results; presenting specified information and training to employees; establishing a medical-surveillance program for overexposed employees; providing required information to the physician; obtaining the physician's written opinion; using proper respiratory equipment; and establishing, maintaining, transferring, and disclosing exposure-monitoring and medical records. These collection-of-information requirements, including the CHP, control employee overexposure to hazardous laboratory chemicals, thereby preventing serious illnesses and death among employees exposed to such chemicals.

[2] ''Laboratory use of hazardous chemicals'' means handling or use of hazardous chemicals in a manner such that: (i) Chemical manipulations are on a ''laboratory scale''; (ii) multiple chemical procedures or chemicals are used; (iii) the procedures involved are not part of a production process nor in any way simulate a production process; and (iv) protective laboratory practices and equipment are available and in common use to minimize the potential for employee exposure to hazardous chemicals. (*See* § 1910.1450(b), ''Definitions.'')

[3] ''Laboratory scale'' means work with substances in which the containers used for reactions, transfers, and other handling of substances are designed to be easily and safely manipulated by one person. Laboratory scale excludes those workplaces whose function is to produce commercial quantities of materials. (*See* § 1910.1450(b), ''Definitions.'')

II. Special Issues for Comment

OSHA has a particular interest in comments on the following issues:

- Whether the proposed information-collection requirements are necessary for the proper performance of the Agency's functions, including whether the information is useful;
- The accuracy of OSHA's estimate of the burden (time and cost) of the information-collection requirements, including the validity of the methodology and assumptions used;
- The quality, utility, and clarity of the information collected; and
- Ways to minimize the burden on employers who must comply; for example, by using automated or other technological information-collection and -transmission techniques.

III. Proposed Actions

OSHA proposes to increase the existing burden-hour estimate, and to extend the Office of Management and Budget's (OMB) approval, of the collection-of-information requirements specified by the Standard. In this regard, the Agency is requesting to increase the current burden-hour estimate from 107,842 hours to 269,273 hours, a total increase of 161,431 hours. This increase largely occurred because OSHA increased the number of laboratories and employees covered by the Standard. The Agency will summarize the comments submitted in response to this notice, and will include this summary in its request to OMB to extend the approval of these information-collection requirements.

Type of Review: Extension of currently approved information-collection requirements.

Title: Occupational Exposure to Hazardous Chemicals in Laboratories (29 CFR 1910.1450).

OMB Number: 1218–0131.

Affected Public: Business or other for-profit; not-for-profit institutions; Federal government; State, local, or tribal governments.

Number of Respondents: 41,900.

Frequency of Response: Annually; monthly; occasionally.

Average Time per Response: Ranges from five minutes (.08 hour) for a variety of requirements (e.g., for an office clerk to develop and post exposure-monitoring results) to eight (8) hours for an employer to develop a Chemical Hygiene Plan.

Estimated Total Burden Hours: 269,273.

Estimated Cost (Operation and Maintenance): $18,235,000.

IV. Authority and Signature

John L. Henshaw, Assistant Secretary of Labor for Occupational Safety and Health, directed the preparation of this notice. The authority for this notice is the Paperwork Reduction Act of 1995 (44 U.S.C. 3506) and Secretary of Labor's Order No. 3–2000 (65 FR 50017).

Signed at Washington, DC on September 26, 2001.

John L. Henshaw,

Assistant Secretary of Labor.

[FR Doc. 01–24559 Filed 10–1–01; 8:45 am]

BILLING CODE 4510–26–M

LEGAL SERVICES CORPORATION

Notice of Intent to Award—Grant Awards for the Provision of Civil Legal Services to Eligible Low-Income Clients Beginning January 1, 2002.

AGENCY: Legal Services Corporation.

ACTION: Announcement of intention to make FY 2002 Competitive Grant Awards.

SUMMARY: The Legal Services Corporation (LSC) hereby announces its intention to award grants and contracts to provide economical and effective delivery of high quality civil legal services to eligible low-income clients, beginning January 1, 2002.

DATES: All comments and recommendations must be received on or before the close of business on November 1, 2001.

ADDRESSES: Legal Services Corporation—Competitive Grants, Legal Services Corporation, 750 First Street NE, 10th Floor, Washington, DC 20002–4250.

FOR FURTHER INFORMATION CONTACT: Reginald Haley, Office of Program Performance, (202) 336–8827.

SUPPLEMENTARY INFORMATION: Pursuant to LSC's announcement of funding availability on April 19, 2001 (66 FR 20165), July 13, 2001 (66 FR 36807), and Grant Renewal applications due on August 13, 2001, LSC will award funds to one or more of the following organizations to provide civil legal services in the indicated service areas.

Service area	Applicant name	Anticipated FY 2002 award
AL–1	Legal Services Corporation of Alabama, Inc	$4,831,192
AL–2	Legal Services of North-Central Alabama, Inc	549,609
AL–3	Legal Services of Metro Birmingham, Inc	977,006
MAL	Texas Rural Legal Aid, Inc	29,695
AK–1	Alaska Legal Services Corporation	587,522
NAK–1	Alaska Legal Services Corporation	488,688
AZ–2	DNA-Peoples Legal Services, Inc	549,786
AZ–3	Community Legal Services, Inc	2,655,476
AZ–5	Southern Arizona Legal Aid, Inc	1,642,490
MAZ	Community Legal Services, Inc	133,997
NAZ–5	DNA-Peoples Legal Services, Inc	2,357,944
NAZ–6	Southern Arizona Legal Aid, Inc	575,978
AR–6	Ozark Legal Services	1,529,150
AR–7	Center for Arkansas Legal Services	2,265,833
MAR	Texas Rural Legal Aid, Inc	63,300
CA–1	California Indian Legal Services, Inc	26,923
CA–2	Greater Bakersfield Legal Assistance, Inc	595,811
CA–12	Inland Counties Legal Services, Inc	2,503,568
CA–14	Legal Aid Society of San Diego, Inc	2,217,381
CA–19	Legal Aid Society of Orange County, Inc	2,818,744
CA–26	Central California Legal Services	2,176,387
CA–27	Legal Services of Northern California, Inc	2,698,853
CA–28	Bay Area Legal Aid	3,612,603
CA–29	Legal Aid Foundation of Los Angeles	6,314,739
CA–30	Neighborhood Legal Services of Los Angeles County	3,196,664
CA–31	California Rural Legal Assistance, Inc	3,477,326
MCA	California Rural Legal Assistance, Inc	2,382,503
NCA–1	California Indian Legal Services, Inc	798,333
CO–6	Colorado Legal Services	3,178,056
MCO	Colorado Legal Services	134,041
NCO–1	Colorado Legal Services	86,780
CT–1	Statewide Legal Services of Connecticut, Inc	1,903,538
NCT–1	Pine Tree Legal Assistance, Inc	14,147
DE–1	Legal Services Corporation of Delaware, Inc	473,889
MDE	Legal Aid Bureau, Inc	22,403
DC–1	Neigh. Legal Services Prog. of the Dist. of Columbia	849,867
FL–1	Central Florida Legal Services, Inc	1,029,969
FL–2	LA Service of Broward County	1,051,155
FL–3	Florida Rural Legal Services, Inc	2,081,636
FL–4	Jacksonville Area Legal Aid, Inc	823,218
FL–5	Legal Services of Greater Miami, Inc	2,908,208
FL–6	Legal Services of North Florida, Inc	882,872
FL–7	Greater Orlando Area Legal Services, Inc	832,698
FL–8	Bay Area Legal Services, Inc	1,171,381
FL–9	Withlacoochee Area Legal Services, Inc	467,966
FL–10	Three Rivers Legal Services, Inc	656,525
FL–11	Northwest Florida Legal Services, Inc	452,589
FL–12	Gulfcoast Legal Services, Inc	991,730
MFL	Florida Rural Legal Services, Inc	810,560
GA–1	Atlanta Legal Aid Society, Inc	1,880,428
GA–2	Georgia Legal Services Program	5,914,001
MGA	Georgia Legal Services Program	353,848
GU–1	Guam Legal Services Corporation	167,338
HI–1	Legal Aid Society of Hawaii	895,875
MHI	Legal Aid Society of Hawaii	62,197
NHI–1	Native Hawaiian Legal Corporation	206,990
ID–1	Idaho Legal Aid Services, Inc	984,032
MID	Idaho Legal Aid Services, Inc	168,697
NID–1	Idaho Legal Aid Services, Inc	58,706
IL–3	Land of Lincoln Legal Assistance Foundation, Inc	2,769,444
IL–6	Legal Assistance Foundation of Metropolitan Chicago	6,174,934
IL–7	Prairie State Legal Services, Inc	2,541,676
MIL	Legal Assistance Foundation of Metropolitan Chicago	225,297
IN–5	Indiana Legal Services, Inc	4,960,961
MIN	Indiana Legal Services, Inc	102,616
IA–1	Legal Services Corporation of Iowa	2,423,664
IA–2	Legal Aid Society of Polk County	255,945
MIA	Legal Services Corporation of Iowa	34,055
KS–1	Kansas Legal Services, Inc	2,413,433
MKS	Kansas Legal Services, Inc	10,725
KY–2	Legal Aid Society	1,231,133
KY–5	Appalachian Research & Defense Fund of KY	2,159,298
KY–9	Cumberland Trace Legal Services, Inc	1,280,662

Service area	Applicant name	Anticipated FY 2002 award
KY–10	Northern Kentucky Legal Aid Society, Inc	1,309,139
MKY	Texas Rural Legal Aid, Inc	38,407
LA–10	Southwest Louisiana Legal Services Society, Inc	2,206,947
LA–10	Acadiana Legal Service Corporation	2,206,947
LA–11	Kisatchie Legal Services Corporation	2,092,899
MLA	Texas Rural Legal Aid, Inc	24,849
ME–1	Pine Tree Legal Assistance, Inc	1,069,215
MMX–1	Pine Tree Legal Assistance, Inc	112,715
NME–1	Pine Tree Legal Assistance, Inc	58,242
MD–1	Legal Aid Bureau, Inc	3,319,036
MMD	Legal Aid Bureau, Inc	82,058
MA–1	Volunteer Lawyers Project of the Boston Bar Assoc	1,581,988
MA–2	South Middlesex Legal Services, Inc	171,098
MA–3	Legal Services for Cape Cod and Islands, Inc	208,932
MA–4	Merrimack Valley Legal Services, Inc	765,859
MA–5	New Center for Legal Advocacy	558,445
MA–10	Massachusetts Justice Project, Inc	1,282,984
MI–1	Legal Services of Southern Michigan, Inc	579,198
MI–1	Wayne County Neighborhood Legal Services, Inc	579,198
MI–2	Legal Services of Southern Michigan, Inc	249,678
MI–3	Legal Aid and Defender Association, Inc	3,501,300
MI–3	Wayne County Neighborhood Legal Services, Inc	3,501,300
MI–4	Wayne County Neighborhood Legal Services, Inc	1,381,151
MI–4	Legal Services of Eastern Michigan	1,381,151
MI–5	Wayne County Neighborhood Legal Services, Inc	543,413
MI–5	Legal Services of Southern Michigan, Inc	543,413
MI–6	Wayne County Neighborhood Legal Services, Inc	589,508
MI–6	Lakeshore Legal Aid	589,508
MI–7	Wayne County Neighborhood Legal Services, Inc	581,229
MI–7	Oakland Livingston Legal Aid	581,229
MI–8	Western Michigan Legal Services	194,887
MI–9	Legal Services of Northern Michigan, Inc	836,388
MI–10	Western Michigan Legal Services	1,078,616
MI–11	Western Michigan Legal Services	431,925
MMI	Legal Services of Southern Michigan, Inc	543,263
NMI–1	Michigan Indian Legal Services, Inc	148,750
MP–1	Micronesian Legal Services, Inc	1,481,411
MN–1	Legal Aid Service of Northeastern Minnesota	495,225
MN–2	Judicare of Anoka County, Inc	107,807
MN–3	Central Minnesota Legal Services, Inc	1,299,200
MN–4	Legal Services of Northwest Minnesota Corporation	485,427
MN–5	Southern Minnesota Regional Legal Services, Inc	1,274,536
MMN	Southern Minnesota Regional Legal Services, Inc	180,570
NMN–1	Anishinabe Legal Services, Inc	215,947
MS–2	North Mississippi Rural Legal Services, Inc	2,359,314
MS–3	South Mississippi Legal Services Corporation	615,310
MS–7	Central Mississippi Legal Services	1,484,475
MS–8	Southeast Mississippi Legal Services Corporation	1,059,629
MMS	Texas Rural Legal Aid, Inc	51,507
NMS–1	Southeast Mississippi Legal Services Corporation	75,113
MO–3	Legal Aid of Western Missouri	1,792,421
MO–4	Legal Services of Eastern Missouri, Inc	1,883,685
MO–5	Mid-Missouri Legal Services Corporation	367,610
MO–7	Legal Services of Southern Missouri	1,735,873
MMO	Legal Aid of Western Missouri	73,522
MT–1	Montana Legal Services Association	1,052,841
MMT	Montana Legal Services Association	49,265
NMT–1	Montana Legal Services Association	143,880
NE–4	Nebraska Legal Services	1,467,905
MNE	Nebraska Legal Services	38,160
NNE–1	Nebraska Legal Services	29,869
NV–1	Nevada Legal Services, Inc	1,053,997
MNV	Nevada Legal Services, Inc	2,269
NNV–1	Nevada Legal Services, Inc	120,157
NH–1	Legal Advice & Referral Center, Inc	601,019
NJ–1	Cape-Atlantic Legal Services, Inc	242,996
NJ–2	Warren County Legal Services, Inc	42,432
NJ–3	Camden Regional Legal Services, Inc	902,363
NJ–4	Union County Legal Services Corporation	304,204
NJ–5	Hunterdon County Legal Service Corporation	23,895
NJ–6	Bergen County Legal Services	275,798
NJ–7	Hudson County Legal Services Corporation	701,093
NJ–8	Essex-Newark Legal Services Project, Inc	940,938

Service area	Applicant name	Anticipated FY 2002 award
NJ–9	Middlesex County Legal Services Corporation	286,488
NJ–10	Passaic County Legal Aid Society	384,840
NJ–11	Somerset-Sussex Legal Services Corporation	90,735
NJ–12	Ocean-Monmouth Legal Services, Inc	456,306
NJ–13	Legal Aid Society of Mercer County	199,381
NJ–14	Legal Aid Society of Morris County	98,971
MNJ	Camden Regional Legal Services, Inc	108,901
NM–1	DNA-Peoples Legal Services, Inc	220,345
NM–5	Southern New Mexico Legal Services, Inc	2,401,375
MNM	Southern New Mexico Legal Services, Inc	78,827
NNM–2	DNA-Peoples Legal Services, Inc	20,530
NNM–4	Southern New Mexico Legal Services, Inc	419,855
NY–1	LAS of Northeastern New York, Inc	732,342
NY–3	Legal Aid for Broome/Chenango	239,491
NY–4	Neighborhood Legal Services, Inc	1,007,857
NY–6	Chemung County Neighborhood Legal Services, Inc	285,799
NY–7	Nassau/Suffolk Law Services Committee, Inc	946,561
NY–8	Legal Aid Society of Rockland County, Inc	577,618
NY–9	Legal Services for New York City	12,073,717
NY–10	Niagara County Legal Aid Society, Inc	202,911
NY–13	Legal Services of Central New York, Inc	750,314
NY–14	Legal Aid Society of Mid-New York, Inc	661,159
NY–15	Westchester/Putnam Legal Services, Inc	646,885
NY–16	North Country Legal Services, Inc	346,742
NY–18	Monroe County Legal Assistance Corporation	944,892
NY–19	Southern Tier Legal Services	436,091
MNY	Legal Aid Society of Mid-New York, Inc	249,819
NC–5	North Carolina Legal Services Transition Board	6,841,627
MNC	North Carolina Legal Services Transition Board	483,714
NNC–1	North Carolina Legal Services Transition Board	197,210
ND–1	Legal Assistance of North Dakota, Inc	665,776
ND–2	North Dakota Legal Services, Inc	8,845
MND	Southern Minnesota Regional Legal Services, Inc	104,611
NND–1	Legal Assistance of North Dakota, Inc	114,960
NND–2	North Dakota Legal Services, Inc	128,449
OH–5	The Legal Aid Society of Columbus	1,232,342
OH–17	Ohio State Legal Services	1,960,579
OH–18	Legal Aid Society of Greater Cincinnati	1,460,605
OH–19	Western Ohio Legal Services Association	1,500,857
OH–20	Community Legal Aid Services, Inc	2,083,039
OH–21	The Legal Aid Society of Cleveland	2,204,828
OH–22	Legal Services of Northwest Ohio, Inc	1,146,912
MOH	Legal Services of Northwest Ohio, Inc	113,686
OK–3	Legal Services of Eastern Oklahoma, Inc	4,444,118
MOK	Legal Services of Eastern Oklahoma, Inc	56,477
NOK–1	Oklahoma Indian Legal Services, Inc	739,870
OR–2	Lane County Legal Aid Service, Inc	293,585
OR–4	Marion-Polk Legal Aid Service, Inc	258,770
OR–5	Legal Aid Services of Oregon	1,989,135
MOR	Legal Aid Services of Oregon	502,728
NOR–1	Legal Aid Services of Oregon	166,808
PA–1	Philadelphia Legal Assistance Center	2,729,704
PA–5	Laurel Legal Services, Inc	862,772
PA–8	Neighborhood Legal Services Association	1,759,398
PA–11	Southwestern Pennsylvania Legal Services, Inc	554,226
PA–23	Legal Aid of Southeastern PA	863,982
PA–24	North Penn Legal Services, Inc	1,581,900
PA–25	MidPenn Legal Services, Inc	2,059,453
PA–26	Northwestern Legal Services	769,857
MPA	Philadelphia Legal Assistance Center	149,586
PR–1	Puerto Rico Legal Services, Inc	17,565,821
PR–2	Community Law Office, Inc	332,707
MPR	Puerto Rico Legal Services, Inc	262,398
RI–1	Rhode Island Legal Services, Inc	816,421
SC–8	Legal Services Agency of Western Carolina, Inc	4,392,152
MSC	Legal Services Agency of Western Carolina, Inc	178,522
SD–1	Black Hills Legal Services, Inc	169,968
SD–2	East River Legal Services	457,436
SD–3	Dakota Plains Legal Services, Inc	307,390
MSD	Black Hills Legal Services, Inc	3,584
NSD–1	Dakota Plains Legal Services, Inc	843,707
TN–4	Memphis Area Legal Services, Inc	1,447,100
TN–7	West Tennessee Legal Services, Inc	688,232

Service area	Applicant name	Anticipated FY 2002 award
TN–9	Knoxville Legal Aid Society, Inc	2,045,356
TN–10	Legal Aid Society of Middle Tennessee	2,337,828
MTN	Texas Rural Legal Aid, Inc	57,244
TX–13	East Texas Legal Services, Inc	8,702,089
TX–14	West Texas Legal Services, Inc	6,826,939
TX–15	Texas Rural Legal Aid, Inc	9,703,546
TX–15	Legal Aid of Central Texas	9,703,546
TX–15	El Paso Legal Assistance Society	9,703,546
TX–15	Bexar County Lgl Aid Assoc	9,703,546
MTX	Texas Rural Legal Aid, Inc	1,261,675
NTX–1	Texas Rural Legal Aid, Inc	28,281
UT–1	Utah Legal Services, Inc	1,637,273
MUT	Utah Legal Services, Inc	61,217
NUT–1	Utah Legal Services, Inc	74,340
VT–1	Legal Services Law Line of Vermont, Inc	463,791
VI–1	Legal Services of the Virgin Islands, Inc	297,407
VA–15	Southwest Virginia Legal Aid Society, Inc	847,729
VA–16	Legal Services of Eastern Virginia, Inc	1,326,167
VA–17	Virginia Legal Aid Society, Inc	810,631
VA–18	Central Virginia Legal Aid Society, Inc	886,774
VA–19	Blue Ridge Legal Services, Inc	600,693
VA–20	Potomac Legal Aid Society, Inc	753,854
MVA	Central Virginia Legal Aid Society, Inc	142,348
WA–1	Northwest Justice Project	3,913,143
MWA	Northwest Justice Project	658,767
NWA–1	Northwest Justice Project	257,410
WV–5	Legal Aid of West Virginia, Inc	3,013,217
MWV	Legal Aid of West Virginia, Inc	32,996
WY–4	Wyoming Legal Services, Inc	451,786
MWY	Wyoming Legal Services, Inc	11,228
NWY–1	Wyoming Legal Services, Inc	156,148

These grants and contracts will be awarded under the authority conferred on LSC by the Legal Services Corporation Act, as amended (42 U.S.C. 2996e(a)(1)). Awards will be made so that each service area indicated is served by one of the organizations listed above, although none of the listed organizations are guaranteed an award or contract. This public notice is issued pursuant to the LSC Act (42 U.S.C. 2996f(f)), with a request for comments and recommendations concerning the potential grantees within a period of thirty (30) days from the date of publication of this notice. Grants will become effective and grant funds will be distributed on or about January 1, 2002.

Dated: September 26, 2001.

Michael A. Genz,

Director, Office of Program Performance.

[FR Doc. 01–24572 Filed 10–1–01; 8:45 am]

BILLING CODE 7050–01–P

LIBRARY OF CONGRESS

Copyright Office

[Docket No. 2001–6 CARP CD 99]

Ascertainment of Controversy for the 1999 Cable Royalty Funds

AGENCY: Copyright Office, Library of Congress.

ACTION: Notice with request for comments and notices of intention to participate.

SUMMARY: The Copyright Office of the Library of Congress directs all claimants to royalty fees collected under the section 111 cable statutory license in 1999 to submit comments as to whether a Phase I or Phase II controversy exists as to the distribution of those fees, and a Notice of Intention to Participate in a royalty distribution proceeding.

DATES: Comments and Notices of Intention to Participate are due on October 16, 2001.

ADDRESSES: If sent by mail, an original and five copies of written comments and a Notice of Intention to Participate should be addressed to: Copyright Arbitration Royalty Panel (CARP), P.O. Box 70977, Southwest Station, Washington, DC 20024. If hand delivered, an original and five copies should be brought to the Office of the General Counsel, James Madison Memorial Building, Room 403, First and Independence Ave., SE., Washington, DC 20540.

FOR FURTHER INFORMATION CONTACT: David O. Carson, General Counsel, or Tanya M. Sandros, Senior Attorney, Copyright Arbitration Royalty Panels, P.O. Box 70977, Southwest Station, Washington, DC 20024. Telephone: (202) 707–8380. Telefax: (202) 252–3423.

SUPPLEMENTARY INFORMATION: Each year cable systems submit royalties to the Copyright Office for the retransmission to their subscribers of over-the-air broadcast signals. These royalties are, in turn, distributed in one of two ways to copyright owners whose works were included in a retransmission of an over-the-air broadcast signal and who timely filed a claim for royalties with the Copyright Office. The copyright owners may either negotiate the terms of a settlement as to the division of the royalty funds, or the Librarian of Congress may convene a Copyright Arbitration Royalty Panel (''CARP'') to determine the distribution of the royalty fees that remain in controversy. *See* 17 U.S.C. chapter 8.

During the pendency of any proceeding, the Librarian of Congress may distribute any amounts that are not in controversy, provided that sufficient funds are withheld to cover reasonable administrative costs and to satisfy all claims with respect to which a controversy exists under his authority set forth in section 111(d)(4) of the Copyright Act, title 17 of the United States Code. *See,* e.g., Orders, Docket No. 2000–6 CARP CD 98 (dated October 12, 2000) and Docket No. 99–7 CARP CD 97 (dated October 18, 1999).

However, the Copyright Office must, prior to any distribution of the royalty fees, ascertain who the claimants are and the extent of any controversy over the distribution of the royalty fees.

The CARP rules provide that:

> In the case of a royalty fee distribution proceeding, the Librarian of Congress shall, after the time period for filing claims, publish in the **Federal Register** a notice requesting each claimant on the claimant list to negotiate with each other a settlement of their differences, and to comment by a date certain as to the existence of controversies with respect to the royalty funds described in the notice. Such notice shall also establish a date certain by which parties wishing to participate in the proceeding must file with the Librarian a notice of intention to participate.

37 CFR 251.45(a). The Copyright Office may publish this notice on its own initiative, *see*, e.g., 64 FR 23875 (May 4, 1999); in response to a motion from an interested party, *see*, e.g., 65 FR 54077 (September 6, 2000), or in response to a petition requesting that the Office declare a controversy and initiate a CARP proceeding. In this case, the Office has received a motion for a partial distribution of the 1999 cable royalty fees.

On September 26, 2001, representatives of the Phase I claimant categories to which royalties have been allocated in prior cable distribution proceedings filed a motion with the Copyright Office for a partial distribution of the 1999 cable royalty fund. The Office will consider this motion after each interested party has been identified by filing the Notice of Intention to Participate requested herein and had an opportunity to file responses to the motion.

1. Comments on the Existence of Controversies

Before commencing a distribution proceeding or making a partial distribution, the Librarian of Congress must first ascertain whether a controversy exists as to the distribution of the royalty fees and the extent of those controversies. 17 U.S.C. 803(d). Therefore, the Copyright Office is requesting comment on the existence and extent of any controversies, at Phase I and Phase II, as to the distribution of the 1999 cable royalty fees.

In Phase I of a cable royalty distribution, royalties are distributed to certain categories of broadcast programming that has been retransmitted by cable systems. The categories have traditionally been syndicated programming and movies, sports, commercial and noncommercial broadcaster-owned programming, religious programming, music programming, and Canadian programming. The Office seeks comments as to controversies between these categories for royalty distribution.

In Phase II of a cable royalty distribution, royalties are distributed to claimants within a program category. If a claimant anticipates a Phase II controversy, the claimant must state each program category in which he or she has an interest that has not, by the end of the comment period, been satisfied through a settlement agreement.

The Copyright Office must be advised of the existence and extent of all Phase I and Phase II controversies by the end of the comment period. It will not consider any controversies that come to our attention after the close of that period.

2. Notice of Intention To Participate

Section 251.45(a) of the rules, 37 CFR, requires that a Notice of Intention to Participate be filed in order to participate in a CARP proceeding, but it does not prescribe the contents of the Notice. Recently, in another proceeding, the Library has been forced to address the issue of what constitutes a sufficient Notice and to whom it is applicable. *See* 65 FR 54077 (September 6, 2000); *see also* Orders in Docket No. 2000–2 CARP CD 93–97 (June 22, 2000, and August 1, 2000). These rulings will result in a future amendment to § 251.45(a) to specify the content of a properly filed Notice. In the meantime, the Office advises those parties filing Notices of Intention to Participate in this proceeding to comply with the following instructions.

Each claimant that has a dispute over the distribution of the 1999 cable royalty fees, either at Phase I or Phase II, shall file a Notice of Intention to Participate that contains the following: (1) the claimant's full name, address, telephone number, and facsimile number (if any); (2) identification of whether the Notice covers a Phase I proceeding, a Phase II proceeding, or both; and (3) a statement of the claimant's intention to fully participate in a CARP proceeding.

Claimants may, in lieu of individual Notices of Intention to Participate, submit joint Notices. In lieu of the requirement that the Notice contain the claimant's name, address, telephone number and facsimile number, a joint Notice shall provide the full name, address, telephone number, and facsimile number (if any) of the person filing the Notice and it shall contain a list identifying all the claimants that are parties to the joint Notice. In addition, if the joint Notice is filed by counsel or a representative of one or more of the claimants identified in the joint Notice, the joint Notice shall contain a statement from such counsel or representative certifying that, as of the date of submission of the joint Notice, such counsel or representative has the authority and consent of the claimants to represent them in the CARP proceeding.

Notices of Intention to Participate are due no later than October 16, 2001. Failure to file a timely Notice of Intention to Participate may preclude a claimant or claimants from participating in a CARP proceeding.

3. Motion of Phase I Claimants for Partial Distribution

A claimant who is not a party to the motion, but who files a Notice of Intention to Participate, may file a response to the motion no later than the due date set forth in this notice for comments on the existence of controversies and the Notices of Intention to Participate. The Motion of Phase I Claimants for Partial Distribution is available for inspection and copying in the Office of the General Counsel.

Dated: September 27, 2001.

David O. Carson,

General Counsel.

[FR Doc. 01–24672 Filed 10–1–01; 8:45 am]

BILLING CODE 1410–33–P

LIBRARY OF CONGRESS

Copyright Office

[Docket No. 2001–5 CARP SD 99]

Ascertainment of Controversy for the 1999 Satellite Royalty Funds

AGENCY: Copyright Office, Library of Congress.

ACTION: Notice with request for comments and notices of intention to participate.

SUMMARY: The Copyright Office of the Library of Congress directs all claimants to royalty fees collected under the section 119 satellite statutory license in 1999 to submit comments as to whether a Phase I or Phase II controversy exists as to the distribution of those fees, and a Notice of Intention to Participate in a royalty distribution proceeding.

DATES: Comments and Notices of Intention are due on October 16, 2001.

ADDRESSES: If sent by mail, an original and five copies of written comments and a Notice of Intention to Participate should be addressed to: Copyright

Arbitration Royalty Panel (CARP), PO Box 70977, Southwest Station, Washington, DC 20024. If hand delivered, an original and five copies should be brought to the Office of the General Counsel, James Madison Memorial Building, Room 403, First and Independence Ave., SE., Washington, DC 20540.

FOR FURTHER INFORMATION CONTACT: David O. Carson, General Counsel, or Tanya M. Sandros, Senior Attorney, Copyright Arbitration Royalty Panels, PO Box 70977, Southwest Station, Washington, DC 20024. Telephone: (202) 707–8380. Telefax: (202) 252–3423.

SUPPLEMENTARY INFORMATION: Each year satellite carriers submit royalties to the Copyright Office for the retransmission to their subscribers of over-the-air broadcast signals. These royalties are, in turn, distributed in one of two ways to copyright owners whose works were included in a retransmission of an over-the-air broadcast signal and who timely filed a claim for royalties with the Copyright Office. The copyright owners may either negotiate the terms of a settlement as to the division of the royalty funds, or the Librarian of Congress may convene a Copyright Arbitration Royalty Panel (''CARP'') to determine the distribution of the royalty fees that remain in controversy. *See* 17 U.S.C. chapter 8.

During the pendency of any proceeding, the Librarian of Congress may distribute any amounts that are not in controversy, provided that sufficient funds are withheld to cover reasonable administrative costs and to satisfy all claims with respect to which a controversy exists under his authority set forth in section 119(b)(4)(C) of the Copyright Act, title 17 of the United States Code. *See*, e.g., Orders, Docket No. 2000–7 CARP SD 96–98 (dated October 12, 2000) and Docket No. 97–1 CARP 92–95 (dated March 17,1997). However, the Copyright Office must, prior to any distribution of the royalty fees, ascertain who the claimants are and the extent of any controversy over the distribution of the royalty fees.

The CARP rules provide that:

> In the case of a royalty fee distribution proceeding, the Librarian of Congress shall, after the time period for filing claims, publish in the **Federal Register** a notice requesting each claimant on the claimant list to negotiate with each other a settlement of their differences, and to comment by a date certain as to the existence of controversies with respect to the royalty funds described in the notice. Such notice shall also establish a date certain by which parties wishing to participate in the proceeding must file with the Librarian a notice of intention to participate.

37 CFR 251.45(a). The Copyright Office may publish this notice on its own initiative, *see*, e.g., 64 FR 23875 (May 4, 1999); in response to a motion from an interested party, *see*, e.g., 65 FR 54077 (September 6, 2000), or in response to a petition requesting that the Office declare a controversy and initiate a CARP proceeding. In this case, the Office has received a motion for a partial distribution of the 1999 satellite royalty fees.

On September 26, 2001, representatives of the Phase I claimant categories to which royalties have been allocated in prior satellite distribution proceedings filed a motion with the Copyright Office for a partial distribution of the 1999 satellite royalty fund. The Office will consider this motion after each interested party has been identified by filing the Notice of Intention to Participate requested herein and had an opportunity to file responses to the motion.

1. Comments on the Existence of Controversies

Before commencing a distribution proceeding or making a partial distribution, the Librarian of Congress must first ascertain whether a controversy exists as to the distribution of the royalty fees and the extent of those controversies. 17 U.S.C. 803(d). Therefore, the Copyright Office is requesting comment on the existence and extent of any controversies, at Phase I and Phase II, as to the distribution of the 1999 satellite royalty fees.

In Phase I of a satellite royalty distribution, royalties are distributed to certain categories of broadcast programming that has been retransmitted by satellite carriers. The categories have traditionally been syndicated programming and movies, sports, commercial and noncommercial broadcaster-owned programming, religious programming, and music programming. The Office seeks comments as to controversies between these categories for royalty distribution.

In Phase II of a satellite royalty distribution, royalties are distributed to claimants within a program category. If a claimant anticipates a Phase II controversy, the claimant must state each program category in which he or she has an interest that has not, by the end of the comment period, been satisfied through a settlement agreement.

The Copyright Office must be advised of the existence and extent of all Phase I and Phase II controversies by the end of the comment period. It will not consider any controversies that come to our attention after the close of that period.

2. Notice of Intention To Participate

Section 251.45(a) of the rules, 37 CFR, requires that a Notice of Intention to Participate be filed in order to participate in a CARP proceeding, but it does not prescribe the contents of the Notice. Recently, in another proceeding, the Library has been forced to address the issue of what constitutes a sufficient Notice and to whom it is applicable. *See* 65 FR 54077 (September 6, 2000); *see also* Orders in Docket No. 2000–2 CARP CD 93–97 (June 22, 2000, and August 1, 2000). These rulings will result in a future amendment to § 251.45(a) to specify the content of a properly filed Notice. In the meantime, the Office advises those parties filing Notices of Intention to Participate in this proceeding to comply with the following instructions.

Each claimant that has a dispute over the distribution of the 1999 satellite royalty fees, either at Phase I or Phase II, shall file a Notice of Intention to Participate that contains the following: (1) The claimant's full name, address, telephone number, and facsimile number (if any); (2) identification of whether the Notice covers a Phase I proceeding, a Phase II proceeding, or both; and (3) a statement of the claimant's intention to fully participate in a CARP proceeding.

Claimants may, in lieu of individual Notices of Intention to Participate, submit joint Notices. In lieu of the requirement that the Notice contain the claimant's name, address, telephone number and facsimile number, a joint Notice shall provide the full name, address, telephone number, and facsimile number (if any) of the person filing the Notice and it shall contain a list identifying all the claimants that are parties to the joint Notice. In addition, if the joint Notice is filed by counsel or a representative of one or more of the claimants identified in the joint Notice, the joint Notice shall contain a statement from such counsel or representative certifying that, as of the date of submission of the joint Notice, such counsel or representative has the authority and consent of the claimants to represent them in the CARP proceeding.

Notices of Intention to Participate are due no later than October 16, 2001. Failure to file a timely Notice of Intention to Participate may preclude a claimant or claimants from participating in a CARP proceeding.

3. Motion of Phase I Claimants for Partial Distribution

A claimant who is not a party to the motion, but who files a Notice of Intention to Participate, may file a response to the motion no later than the due date set forth in this notice for comments on the existence of controversies and the Notices of Intention to Participate. The Motion of Phase I Claimants for Partial Distribution is available for inspection and copying in the Office of the General Counsel.

Dated: September 27, 2001.

David O. Carson,

General Counsel.

[FR Doc. 01–24671 Filed 10–1–01; 8:45 am]

BILLING CODE 1410–33–P

NATIONAL AERONAUTICS AND SPACE ADMINISTRATION

[Notice (01–117)]

Notice of Prospective Patent License

AGENCY: National Aeronautics and Space Administration.

ACTION: Notice of Prospective Patent License.

SUMMARY: NASA hereby gives notice that Phoenix Systems International, Inc. of Pinebrook, NJ, has applied for an exclusive license to practice the invention described and claimed in U.S. Patent Number 6,039,783 entitled ''Process and Equipment for Nitrogen Oxide Waste Conversion to Fertilizer,'' which is assigned to the United States of America as represented by the Administrator of the National Aeronautics and Space Administration. Written objections to the prospective grant of a license should be sent to Mr. Randy Heald, Assistant Chief Counsel/Patent Counsel, John F. Kennedy Space Center, Kennedy Space Center, FL 32899.

DATE(S): Responses to this notice must be received within 15 days from date of publication in the **Federal Register**.

FOR FURTHER INFORMATION CONTACT: Mr. Randy Heald, Assistant Chief Counsel/Patent Counsel, Office of Chief Counsel, John F. Kennedy Space Center, Mail Code: CC–A, Kennedy Space Center, FL 32899. Telephone (321) 867–7214, e-mail: *Randall.Heald-1@ksc.nasa.gov.*

Dated: September 25, 2001.

Edward A. Frankle,

General Counsel.

[FR Doc. 01–24532 Filed 10–1–01; 8:45 am]

BILLING CODE 7510–01–P

NATIONAL AERONAUTICS AND SPACE ADMINISTRATION

[Notice (01–114)]

Notice of Prospective Patent License

AGENCY: National Aeronautics and Space Administration.

ACTION: Notice of prospective patent license.

SUMMARY: NASA hereby gives notice that Profound Technologies, a Georgia corporation, has applied for a partially exclusive license to practice the invention described and claimed in U.S. Patent No. 6,261,844, entitled ''Urine Preservative,'' which is assigned to the United States of America as represented by the Administrator of the National Aeronautics and Space Administration. Written objections to the prospective grant of a license should be sent to Johnson Space Center.

DATE(S): Responses to this notice must be received by November 16, 2001.

FOR FURTHER INFORMATION CONTACT: James Cate, Patent Attorney, NASA Johnson Space Center, Mail Stop HA, Houston, TX 77058–8452; telephone (281) 483–1001.

Dated: September 25, 2001.

Edward A. Frankle,

General Counsel.

[FR Doc. 01–24529 Filed 10–1–01; 8:45 am]

BILLING CODE 7510–01–P

NATIONAL AERONAUTICS AND SPACE ADMINISTRATION

[Notice (01–116)]

Notice of Prospective Patent License

AGENCY: National Aeronautics and Space Administration.

ACTION: Notice of prospective patent license.

SUMMARY: NASA hereby gives notice that Solus Refrigeration, Inc. of Sparks, Nevada, has applied for a partially exclusive license to practice the inventions described and claimed in U.S. Patent No. 6,253,563, NASA Case No. MSC-22970–2, and NASA Case No. MSC22970–3, all three inventions entitled ''Solar Powered Refrigeration System,'' which are assigned to the United States of America as represented by the Administrator of the National Aeronautics and Space Administration. Written objections to the prospective grant of a license should be sent to Johnson Space Center.

DATE(S): Responses to this notice must be received by November 16, 2001.

FOR FURTHER INFORMATION CONTACT: James Cate, Patent Attorney, NASA Johnson Space Center, Mail Stop HA, Houston, TX 77058–8452; telephone (281) 483–1001.

Dated: September 25, 2001.

Edward A. Frankle,

General Counsel.

[FR Doc. 01–24531 Filed 10–1–01; 8:45 am]

BILLING CODE 7510–01–P

NATIONAL AERONAUTICS AND SPACE ADMINISTRATION

[Notice (01–115)]

Notice of Prospective Patent License

AGENCY: National Aeronautics and Space Administration.

ACTION: Notice of prospective patent license.

SUMMARY: NASA hereby gives notice that Ticona Polymers, Inc of Summit, NJ 07901–3914, has applied for an exclusive license to practice the invention described and claimed in NASA Case No. LAR–16079–1, entitled ''LIQUID CRYSTALLINE THERMOSETS FROM ESTER, ESTER–IMIDE, AND ESTER–AMIDE OLIGOMERS,'' for which a U.S. Patent Application was filed and assigned to the United States of America as represented by the Administrator of the National Aeronautics and Space Administration. Written objections to the prospective grant of a license should be sent to Langley Research Center.

DATE(S): Responses to this notice must be received by October 17, 2001.

FOR FURTHER INFORMATION CONTACT: Robin W. Edwards, Patent Attorney, Langley Research Center, Mail Stop 212, Hampton, VA 23061–2199.

Dated: September 25, 2001.

Edward A. Frankle,

General Counsel.

[FR Doc. 01–24530 Filed 10–1–01; 8:45 am]

BILLING CODE 7510–01–P

NATIONAL FOUNDATION ON THE ARTS AND THE HUMANITIES

National Endowment for the Arts; Combined Arts Advisory Panel—Agenda Changes

Pursuant to Section 10(a)(2) of the Federal Advisory Committee Act (Pub. L. 92–463), as amended, notice is hereby given of changes in the agendas for two meetings of the Combined Arts Advisory Panel to the National Council on the Arts (Arts Learning sections A1

and B) to be held at the Nancy Hanks Center, 1100 Pennsylvania Avenue, NW., Washington, DC, 20506 as follows:

Arts Learning Panel A1: October 15–19, 2001, Room 716. The open session of this meeting will be held from 9:30 a.m. to 10:30 a.m. on October 19th, instead of from 10 a.m. to 12 p.m. as previously announced. The meeting will end at 12:30 p.m. on the 19th.

Arts Learning Panel B: October 9–12, 2001, Room 716. The open session of this meeting will be held from 9 a.m to 10 a.m on October 12th instead of 10:30 a.m. to 12 p.m. as previously announced. The meeting will end at 1 p.m. on the 12th.

Dated: September 28, 2001.

Kathy Plowitz-Worden,

Panel Coordinator.

[FR Doc. 01–24698 Filed 10–1–01; 8:45 am]

BILLING CODE 7537–01–U

NATIONAL SCIENCE FOUNDATION

Sunshine Act Meeting

AGENCY HOLDING MEETING: National Science Foundation, National Science Board.

DATE AND TIME: October 11, 2001: 11 a.m.–11:30 a.m., Closed Session; October 11, 2001: 11:30 a.m.–1 p.m., Open Session.

PLACE: The National Science Foundation, Room 1235, 4201 Wilson Boulevard, Arlington, VA 22230, www.nsf.gov/nsb.

STATUS: Part of this meeting will be close to the public; part of this meeting will be open to the public.

MATTERS TO BE CONSIDERED:

Thursday, October 11, 2001

Closed Session (11 a.m.–11:30 p.m.)

—Closed Session Minutes, August, 2001
—NSF Budget

Open Session (11:30 a.m.–1 p.m.)

—Open Session Minutes, August, 2001
—Closed Session Items for November, 2001
—Chairman's Report
—Director's Report
—SPI Report—Approval
—SEI 2002—Approval
—Merit Review Criterion—Broader Impacts
—Committee Reports
—Other Business

Marta Cehelsky,

Executive Officer.

[FR Doc. 01–24773 Filed 9–28–01; 3:02 pm]

BILLING CODE 7555–01–M

NUCLEAR REGULATORY COMMISSION

[Docket No.: 040–09022]

Consideration of License Amendment Request for the SCA Services Site in Bay County, MI, and Opportunity for a Hearing

AGENCY: Nuclear Regulatory Commission.

ACTION: Notice of consideration of license amendment request for the SCA Services site in Bay County, Michigan, and Opportunity for a Hearing.

The U.S. Nuclear Regulatory Commission (NRC) is considering issuance of a license amendment to Materials License No. SUC–1565 (SUC–1565) (the license), issued to SCA Services, 700 56th Avenue, Zeeland, Michigan 49464, to amend condition 11A for an alternative schedule for submitting a decommissioning plan (DP) for the SCA Services (Hartley & Hartley Landfill) Site Decommissioning Management Plan (SDMP) site in Bay County, Michigan. Condition 11A of the current license requires the DP to be submitted by October 1, 2000. The licensee failed to comply with this condition. A Notice of Violation (NOV) was issued on December 21, 2000. On September 5, 2001, the licensee requested that the due date for the submission of the DP be extended to September 30, 2003. The requested amendment is part of the corrective action resulting from the NOV.

The NRC hereby provides notice that this is a proceeding on request for amendment of a license falling within the scope of subpart L ''Informal Hearing Procedures for Adjudication in Materials Licensing Proceedings,'' of NRC's rules of practice for domestic licensing proceedings in 10 CFR part 2. Pursuant to Section 2.1205(a), any person whose interest may be affected by this proceeding may file a request for a hearing in accordance with Section 2.1205(d). A request for a hearing must be filed within thirty (30) days of the date of publication of this **Federal Register** notice.

The request for a hearing must be filed with the Office of the Secretary either:

1. By delivery to the Secretary, U.S. Nuclear Regulatory Commission, One White Flint North, 11555 Rockville Pike, Rockville, MD 20852–2738; or

2. By mail or telegram addressed to the Secretary, U.S. Nuclear Regulatory Commission, Washington, DC 20555. Attention: Rulemakings and Adjudications Staff.

In addition to meeting other applicable requirements of 10 CFR part 2 of the NRC's regulations, a request for a hearing filed by a person other than an applicant must describe in detail:

1. The interest of the requester in the proceeding;

2. How that interest may be affected by the results of the proceeding, including the reasons why the requester should be permitted a hearing, with particular reference to the factors set out in Section 2.1205(h);

3. The requester's area of concern about the licensing activity that is the subject matter of the proceeding; and

4. The circumstances establishing that the request for a hearing is timely in accordance with Section 2.1205(d).

In accordance with 10 CFR 2.1205(f), each request for a hearing must also be served by delivering it personally or by mail, to:

1. The applicant, SCA Services, Inc., 700 56th Avenue, Zeeland, MI 49464; and

2. The NRC staff, by delivery to the General Counsel, One White Flint North, 11555 Rockville Pike, Rockville, MD 20852–2738, or by mail to the General Counsel, U.S. Nuclear Regulatory Commission, Washington, DC 20555.

For further details with respect to this action, the licensee request is available for inspection at the NRC's Public Document Room, One White Flint North, 11555 Rockville Pike, Rockville, MD, 20852–2738.

Dated at Rockville, Maryland, this 19th Day of September, 2001.

For the Nuclear Regulatory Commission.

M. (Sam) Nalluswami,

Project Manager, Facilities Decommissioning Section, Decommissioning Branch, Division of Waste Management, Office of Nuclear Material Safety and Safeguards.

[FR Doc. 01–24579 Filed 10–1–01; 8:45 am]

BILLING CODE 7590–01–P

NUCLEAR REGULATORY COMMISSION

Sunshine Act Meeting

AGENCY HOLDING THE MEETING: Nuclear Regulatory Commission.

DATE: Weeks of October 1, 8, 15, 22, 29, November 5, 2001.

PLACE: Commissioners' Conference Room, 11555 Rockville Pike, Rockville, Maryland.

STATUS: Public and Closed.

MATTERS TO BE CONSIDERED:

Week of October 1, 2001

Thursday, October 4, 2001

9:25 a.m.—Affirmation Session (Public Meeting) (if needed)

Week of October 8, 2001—Tentative

There are no meetings scheduled for the Week of October 8, 2001.

Week of October 15, 2001—Tentative

Thursday, October 18, 2001

9 a.m.—Meeting with NRC Stakeholders—Progress of Regulatory Reform (Public Meeting) (Location—Two White Flint North Auditorium)

Week of October 22, 2001—Tentative

There are no meetings scheduled for the Week of October 22, 2001.

Week of October 29, 2001—Tentative

There are no meetings scheduled for the Week of October 29, 2001.

Week of November 5, 2001—Tentative

There are no meetings scheduled for the Week of November 5, 2001.

* The schedule for Commission meetings is subject to change on short notice. To verify the status of meetings call (recording)—(301) 415–1292. Contact person for more information: David Louis Gamberoni (301) 415–1651.

The NRC Commission Meeting Schedule can be found on the Internet at: http://www.nrc.gov/SECY/smj/schedule.htm.

This notice is distributed by mail to several hundred subscribers; if you no longer wish to receive it, or would like to be added to the distribution, please contact the Office of the Secretary, Washington, DC 20555 (301–415–1969), In addition, distribution of this meeting notice over the Internet system is available. If you are interested in receiving this Commission meeting schedule electronically, please send an electronic message to dkw@nrc.gov.

Dated: September 27, 2001.

David Louis Gamberoni,

Technical Coordinator, Office of the Secretary.

[FR Doc. 01–24697 Filed 10–01–01; 8:45 am]

BILLING CODE 7590–01–M

OFFICE OF PERSONNEL MANAGEMENT

Submission for OMB Review: Comment Request for Reclearance of Previously Approved Collections: Standard Forms 85, 85P, 85P–S, 86, and 86A

AGENCY: U.S. Office of Personnel Management.

ACTION: Notice.

SUMMARY: In accordance with the Paperwork Reduction Act of 1995 (Public Law 104–13, May 22, 1995), this notice announces that the Office of Personnel Management (OPM) has submitted to the Office of Management and Budget (OMB) a request for reclearance of five (5) information collections.

Executive Orders 10450 and 12968 require that investigations be conducted on all persons entering Federal service, or assigned to Federal positions affecting the public trust or requiring a security clearance. The Standard Form 85, Questionnaire for Non-Sensitive Positions, is completed by appointees to non-sensitive positions in the Federal government, and is used by OPM to conduct National Agency Checks and Inquiries investigations. The Standard Form 85P, Questionnaire for Public Trust Positions, is completed by persons seeking placement in positions designated as low, moderate or high risk to the public trust because of their sensitive duties. This information collection also includes the Standard Form 85P-S, Supplemental Questionnaire for Selected Positions, which is requested for selected positions at the high risk level. Information collected on the SF 85P and SF 85P-S is used by OPM and other Federal agencies to initiate background investigations required to determine suitability for placement in public trust or other sensitive, non-access positions. The Standard Form 86, Questionnaire for National Security Positions, is completed by persons performing or seeking to perform national security duties for the Federal government, and is used by OPM and other Federal agencies to initiate national security investigations. These information collections include Standard Form 86A, Continuation Sheet for Questionnaires SF 86, SF 85P and SF 85, which provides formatted space to continue answers to questions on the other forms.

We estimate 10 respondents who are not Federal employees will complete the SF 85 annually, that the burden for each response is 30 minutes, and that the total annual burden is five hours. The number of non-Federal employees expected to complete the SF 85P is 2,000, each form requires approximately 60 minutes to complete, and the annual burden is estimated at 2,000 hours. The number of non-Federal employees expected to complete the SF 85P-S is 300, each form requires approximately 10 minutes to complete, and the annual burden is estimated at 50 hours. The number of non-Federal employees expected to complete the SF 86 and SF 86A is 200,000, the form requires an average of 90 minutes to complete, and the annual burden is estimated at 300,000 hours.

For copies of this request, please contact Mary Beth Smith-Toomey, by phone at: (202) 606–8358, by FAX at: (202) 418–3251, or by e-mail at: *mbtoomey@opm.gov.* Please include a mailing address with your request.

DATES: Comments on this proposal should be received on or before November 1, 2001.

ADDRESSES: Send or deliver written comments to:

Richard A. Ferris, Associate Director, Investigations Service, U.S. Office of Personnel Management, 1900 E Street, NW., room 5416, Washington, DC 20415–4000

and

Joseph Lackey, OPM Desk Officer, Office of Information and Regulatory Affairs, Office of Management and Budget, New Executive Office Building, NW., room 10235, Washington, DC 20503

FOR FURTHER INFORMATION CONTACT: Rasheedah I. Ahmad, Program Analyst, Investigations Service, OPM, (202) 606–7983.

Office of Personnel Management.

Kay Coles James,

Director.

[FR Doc. 01–24565 Filed 10–1–01; 8:45 am]

BILLING CODE 6325–38–P

OFFICE OF PERSONNEL MANAGEMENT

Submission for OMB Review; Comment Request for Review of Expiring Information Collection Form: OPM–1386B

AGENCY: Office of Personnel Management.

ACTION: Notice.

SUMMARY: In accordance with the Paperwork Reduction Act of 1995 (Public Law 104–13, May 22 1995), this notice announces that the Office of Personnel Management (OPM) has submitted to the Office of Management and Budget a request for review of an expiring information collection form, OPM–1386B, Applicant Race and National Origin Questionnaire. This form is used to gather information concerning the race and national origin of applicants for employment under the Outstanding Scholar provision of the Luevano Consent Decree, 93 F.R.D. 68 (1981).

During the sixty-day comment period, OPM received two comments. The first comment stated that OPM should provide the OPM–1386B form electronically on OPM's website for applicants to complete and e-mail to the proper agency. It is our intent to provide the form electronically on the OPM website for agencies to download and distribute. The second stated that applicants should submit their information directly to OPM. In the section titled ''Monitoring, Recordkeeping and Reporting,'' of the Luevano Consent Decree it specifically states that agencies will be responsible for collecting, maintaining, and compiling statistics on the special programs.

Approximately 100,000 OPM–1386B forms are completed annually. The 60-day **Federal Register** Notice reported an incorrect response time of 8 minutes. The correct estimated response time is 5 minutes with an annual public burden of 8,333 hours.

For copies of this proposal, contact Mary Beth Smith-Toomey on (202) 606–8358, FAX (202) 418–3251 or e-mail to *mbtoomey@opm.gov.* Please include a mailing address with the request.

DATES: Comments on this proposal should be received within 30 calendar days from the date of this publication.

ADDRESSES: Send or deliver comments to:

Suzy M. Barker, Director, Examining & Qualifications Policy Division, Employment Service, U.S. Office of Personnel Management, 1900 E Street, NW., Room 6500, Washington, DC 20415

and

Joseph Lackey, OPM Desk Officer, Office of Information and Regulatory Affairs, Office of Management and Budget, New Executive Office Building, NW., Room 10235, Washington, DC 20503

Office of Personnel Management.

Kay Coles James,

Director.

[FR Doc. 01–24566 Filed 10–1–01; 8:45 am]

BILLING CODE 6325–38–P

OFFICE OF PERSONNEL MANAGEMENT

Federal Salary Council

AGENCY: Office of Personnel Management.

ACTION: Notice of meeting.

SUMMARY: The Federal Salary Council will meet at the time and location shown below. The Council is an advisory body composed of representatives of Federal employee organizations and experts in the fields of labor relations or pay policy. The Council makes recommendations to the President's Pay Agent (the Secretary of Labor and the Directors of the Office of Management and Budget and the Office of Personnel Management) about the locality pay program for General Schedule employees under section 5304 of title 5, United States Code. The Council's recommendations cover the establishment or modification of locality pay areas, the coverage of salary surveys, the process of comparing Federal and non-Federal rates of pay, and the level of comparability payments that should be paid. This meeting is to formulate the Council's recommendations for locality payments in 2003. The meeting is open to the public.

DATES: October 22, 2001, at 10 a.m.

LOCATION: Office of Personnel Management, 1900 E Street NW., Room 5303 (Pendleton Room), Washington, DC.

FOR FURTHER INFORMATION CONTACT: Donald J. Winstead, Assistant Director for Compensation Administration, Office of Personnel Management, 1900 E Street NW., Room 7H31, Washington, DC 20415–8200. Phone (202) 606–2838; FAX (202) 606–0824; or e-mail at *payleave@opm.gov.*

For the President's Pay Agent

Kay Coles James,

Director.

[FR Doc. 01–24567 Filed 10–1–01; 8:45 am]

BILLING CODE 6325–39–P

SECURITIES AND EXCHANGE COMMISSION

Submission for OMB Review; Comment Request

Upon Written Request; Copies Available From: Securities and Exchange Commission, Office of Filings and Information Services, Washington, DC 20549.

Extension: Regulation A and Forms 1–A and 2–A, OMB Control No. 3235–0286, SEC File No. 270–110.

Notice is hereby given that, pursuant to the Paperwork Reduction Act of 1995 (44 U.S.C. 3501 et seq.) the Securities and Exchange Commission (''Commission'') has submitted to the Office of Management and Budget request for extension of the previously approved collection of information discussed below.

Regulation A provides an exemption from registration under the Securities Act for certain limited securities offerings by issuers who do not otherwise file reports with the Commission. Form 1–A is an offering statement filed under Regulation A. Form 2–A is used to report sales and use of proceeds in Regulation A offerings. All information is provided to the public for review. The information is filed on occasion and is mandatory. Approximately 186 issuers annually file Forms 1–A and 2–A. It is estimated that Form 1–A takes 608 hours to prepare, Form 2–A takes 12 hours to prepare and Regulation A takes one administrative hour to review for a total of 621 hours per response. The total burden is 115,506 hours. It is estimated that 75% of the 115,506 total burden hours (86,630 burden hours) would be prepared by the company. Finally, persons who respond to the collection of information prescribe to in Regulation A and its offering statements are not required to respond unless the collection of information displays a currently valid control number.

Written comments regarding the above information should be directed to the following persons: (i) Desks Officer for the Securities and Exchange Commission, Office of Information and Regulatory Affairs, Office of Management and Budget, Room 10102, New Executive Office Building, Washington, D.C. 20503; and (ii) Michael E. Bartell, Associate Executive Director, Office of Information Technology, Securities and Exchange Commission, 450 Fifth Street, N.W., Washington, D.C. 20549. Comments must be submitted to OMB within 30 days of this notice.

Dated: September 25, 2001.

Margaret H. McFarland,

Deputy Secretary.

[FR Doc. 01–24543 Filed 10–1–01; 8:45 am]

BILLING CODE 8010–01–M

SECURITIES AND EXCHANGE COMMISSION

[Release No. 34–44822; File No. S7–24–89]

Joint Industry Plan; Notice of Filing of Amendment No. 12 to the Reporting Plan for Nasdaq/National Market Securities Traded on an Exchange on an Unlisted or Listed Basis, Submitted by the National Association of Securities Dealers, Inc., the Pacific Exchange, Inc. and the Boston, Chicago, Philadelphia, and Cincinnati Stock Exchanges

September 20, 2001.

I. Introduction

Pursuant to Rule 11Aa3–2 [1] and Rule 11Aa3–1 [2] under the Securities Exchange Act of 1934 (''Act''), notice is hereby given that on August 29, 2001, the Cincinnati Stock Exchange Inc. (''CSE'') on behalf of itself and the National Association of Securities Dealers, Inc. (''NASD''), the Boston Stock Exchange, Inc. (''BSE''), the Chicago Stock Exchange, Inc. (''CHX''), the Pacific Exchange, Inc. (''PCX''), and the Philadelphia Stock Exchange, Inc. (''PHLX'') (hereinafter referred to as ''Participants''),[3] as members of the operating committee (''Operating Committee'' or ''Committee'') [4] of the Nasdaq/UTP Plan submitted to the Securities and Exchange Commission (''SEC'' or ''Commission'') a proposal to amend the Plan. The proposal represents the 12th amendment (''12th Amendment'') made to the Plan and reflects several changes unanimously adopted by the Committee. On September 18, 2001, the Committee submitted an amendment to the proposed 12th Amendment.[5] The Commission is publishing this notice to solicit comments from interested persons on the 12th Amendment.

II. Background

The Plan governs the collection, consolidation, and dissemination of quotation and transaction information for Nasdaq/National Market (''Nasdaq/NM'') securities listed on an exchange or traded on an exchange pursuant to unlisted trading privileges (''UTP'').[6] The Plan provides for the collection from Plan Participants, and the consolidation and dissemination to vendors, subscribers and others, of quotation and transaction information in ''eligible securities.'' [7] The Plan contains various provisions concerning its operation, including: Implementation of the Plan; Manner of Collecting, Processing, Sequencing, Making Available and Disseminating Last Sale Information; Reporting Requirements (including hours of operation); Standards and Methods of Ensuring Promptness, Accuracy and Completeness of Transaction Reports; Terms and Conditions of Access; Description of Operation of Facility Contemplated by the Plan; Method and Frequency of Processor Evaluation; Written Understandings of Agreements Relating to Interpretation of, or Participation in, the Plan; Calculation of the Best Bid and Offer (''BBO''); Dispute Resolution; and Method of Determination and Imposition, and Amount of Fees and Charges.

The Commission originally approved the Plan on a pilot basis on June 26, 1990.[8] The parties did not begin trading until July 12, 1993, accordingly, the pilot period commenced on July 12, 1993. The Plan has since been in operation on an extended pilot basis.[9]

III. Description and Purpose of the Amendment

The complete text of the Plan, as amended, is attached as Exhibit A. The following is a summary of the proposed changes to the Plan prepared by the Participants.

A. Rule 11Aa3–2 [10]

1. The Participants propose to change the Plan name to the ''Joint Self-Regulatory Organization Plan Governing The Collection, Consolidation And Dissemination Of Quotation And Transaction Information For Nasdaq-Listed Securities Traded On Exchanges On An Unlisted Trading Privilege Basis.''

2. Section I.A. of the Plan provides that a national securities exchange in whose market Eligible Securities [11] become traded, may become a Participant,[12] provided that said organization executes a copy of the Plan and pays its share of development costs as specified in Section XIV of the Plan. Accordingly, the BSE, previously a Limited Participant in the Plan, and the Amex have, consistent with Section I.B. of the Plan, executed a copy of the Plan, and have previously satisfied their respective shares of the development costs as specified in Section XIV of the Plan. The 12th Amendment is proposed to reflect both the Amex and the BSE as full Participants of the Plan.

3. The Participants propose to amend the Plan to reflect that the status of a

---

[1] 17 CFR 240.11Aa3–2.

[2] 17 CFR 240.11Aa3–1.

[3] The CSE was elected chair of the Operating Committee for the Joint Self-Regulatory Organization Plan Governing the Collection, Consolidation, and Dissemination of Quotation and Transaction Information for Exchange-Listed Nasdaq/National Market System Securities and for Nasdaq/National Market System Securities Traded on Exchanges on an Unlisted Trading Privileges Basis (''Nasdaq UTP Plan'' or ''Plan'') by the Participants.

[4] Among other things, the 12th Amendment shall add the American Stock Exchange LLC (''Amex'') as a Participant and shall remove the Chicago Board Options Exchange (''CBOE'') from the Plan. The Committee is made up of all the Participants.

[5] *See* letter from Jeffrey T. Brown, Committee Chairman, CSE, to Jonathan G. Katz, Secretary, SEC, dated August 29, 2001. In the amendment, the Committee clarified a portion of the description of the 12th Amendment but did not change any of the proposed Plan text.

[6] Section 12 of the Act generally requires an exchange to trade only those securities that the exchange lists, except that Section 12(f) of the Act permits UTP under certain circumstances. For example, Section 12(f) of the Act, among other things, permits exchanges to trade certain securities that are traded over-the-counter (''OTC/UTP''), but only pursuant to a Commission order or rule. For a more complete discussion of the Section 12(f) requirement, *see* November 1995 Extension Order, *infra* note 9.

[7] Currently, the Plan defines ''Eligible Securities'' as any Nasdaq/NM security as to which UTP have been granted to a national securities exchange pursuant to Section 12(f) of the Act or that is listed on a national securities exchange. The Participants propose to amend the definition of ''eligible security'' in this amendment to include Nasdaq SmallCap securities.

[8] See Securities Exchange Act Release No. 28146, 55 FR 27917 (July 6, 1990) (''1990 Plan Approval Order'').

[9] *See* Securities Exchange Act Release Nos. 34371 (July 13, 1994), 59 FR 37103 (July 20, 1994); 35221 (January 11, 1995), 60 FR 3886 (January 19, 1995); 36102 (August 14, 1995), 60 FR 43626 (August 22, 1995); 36226 (September 13, 1995), 60 FR 49029 (September 21, 1995); 36368 (October 13, 1995), 60 FR 54091 (October 19, 1995); 36481 (November 13, 1995), 60 FR 58119 (November 24, 1995) (''November 1995 Extension Order''); 36589 (December 13, 1995), 60 FR 65696 (December 20, 1995); 36650 (December 28, 1995), 61 FR 358 (January 4, 1996); 36934 (March 6, 1996), 61 FR 10408 (March 13, 1996); 36985 (March 18, 1996), 61 FR 12122 (March 25, 1996); 37689 (September 16, 1996), 61 FR 50058 (September 24, 1996); 37772 (October 1, 1996), 61 FR 52980 (October 9, 1996); 38457 (March 31, 1997), 62 FR 16880 (April 8, 1997); 38794 (June 30, 1997) 62 FR 36586 (July 8, 1997); 39505 (December 31, 1997) 63 FR 1515 (January 9, 1998); 40151 (July 1, 1998) 63 FR 36979 (July 8, 1998); 40896 (December 31, 1998), 64 FR 1834 (January 12, 1999); 41392 (May 12, 1999), 64 FR 27839 (May 21, 1999) (''May 1999 Approval Order''); 42268 (December 23, 1999), 65 FR 1202 (January 6, 2000); 43005 (June 30, 2000), 65 FR 42411 (July 10, 2000); 44099 (March 23, 2001), 66 FR 17457 (March 30, 2001); and 44348 (May 24, 2001), 66 FR 29610 (May 31, 2001); 44552 (July 13, 2001), 66 FR 37712 (July 19, 2001); 44694 (August 14, 2001), 66 FR 43598 (August 20, 2001).

[10] 17 CFR 240.11Aa3–2.

[11] As proposed under the 12th Amendment, the Plan will define ''Eligible Security'' as ''any Nasdaq National Market or Nasdaq SmallCap security, as defined in NASD Rule 4200: (i) as to which unlisted trading privileges have been granted to a national securities exchange pursuant to Section 12(f) of the Exchange Act or which become eligible for such trading pursuant to order of the Securities and Exchange Commission; or (ii) which also is listed on a national securities exchange.''

[12] The Plan defines ''Participant'' as ''a registered national securities exchange or national securities association that is a signatory to this Plan.''

Limited Participant[13] is no longer recognized in the Plan and such terminology has been omitted where referenced throughout the Plan.

4. *Section III.B.* The Participants propose to amend the definition of ''Eligible Security'' to include Nasdaq SmallCap Market security.[14] The Participants propose this amendment in a response to the PCX's petition to the Commission to expand the Plan's definition of Eligible Security.[15]

The Committee, in agreeing with PCX's position and also in the event that the Commission approves Nasdaq's application for registration as a national securities exchange, voted to make SmallCap securities eligible for trading under the Plan. The Committee believes that requirements under the Act notwithstanding, the decision to include SmallCap securities within the Plan also eliminates confusion to potential users as to which Nasdaq securities are eligible for trading pursuant to UTP.

5. *Section IV.D. Operating Committees: Meetings.* The Participants propose to establish the voting and quorum requirements for Committee meetings and the manner in which formal actions may be taken on behalf of the Committee.

6. *Section V.E.* The Committee proposes to establish a process for selecting a new Securities Information Processor (''SIP'') for Nasdaq listed securities traded on exchanges on an UTP basis.[16]

7. The Committee proposes to re-title Section VI to ''Functions of the Processor.''

8. *Section VI.C.1. Best Bid and Offer.* The Participants propose to clarify the priority rules. Specifically, the Participants propose that if an Exchange Participant or Nasdaq market participant changes its quote, it will lose ranking within the price/time priority. However, a change to only bid size and/or ask size will not change the time priority of the quote.

The Participants propose that Section VI.C.1. also provide for rules governing the carrying over of Participant quotes from one trading day to the next, including the use of previous day quotes in the calculation of the consolidated BBO.

Finally, the Participants propose, in Section VI.C.1., to establish procedures for the Processor to follow when the BBO results in a locked or crossed market and that the Processor shall cease calculation of the BBO at 6:30 p.m. Eastern Standard Time (''EST'').

9. *Section VI.C.2 Eligible Securities.* The Participants propose to include in the Plan a suggestion to the Commission of a ''phase-in'' schedule, which was agreed to by all Plan Participants, for the addition of Nasdaq securities that will be eligible for trading pursuant to UTP by Plan Participants. The purpose of phasing-in the number of eligible securities over a period of time, as opposed to granting immediate eligibility to all Nasdaq securities, is to minimize the threat to available SIP capacity that may arise as Participants trade additional Eligible Securities pursuant to UTP. The Committee has agreed that the phase-in period will allow the SIP to monitor the effects, if any, that the increased quote traffic and trading have upon SIP capacity. It should be noted that the phase-in schedule does not apply to Nasdaq, Nasdaq market participants acting in that capacity, or to any Participant that does not engage in auto-quoting as described below.[17]

The proposal contemplates that all Eligible Securities will be phased-in by the end of the fifth calendar quarter following the phase-in commencement date of September 30, 2001, or such date established by the Commission. However, in no case shall the number of Eligible Securities exceed the number of securities the Commission deems eligible for trading under the Plan. The Participants propose the phase-in schedule to minimize any threats to the SIP's capacity, and as such, the proposal provides that Nasdaq, acting as the SIP, can suspend the phase-in schedule and delay the expansion of the number of Eligible Securities that may be traded under the Plan in the event that system capacity and operational concerns arise.

Specifically, the Committee's primary concern is that members of the various Participant exchanges who partake in the practice of auto-quoting—the practice of tracking by automated means the changes to the best bid or best ask quotation and responding by generating another quote change to keep that Participant away from the best bid or ask quotation, with certain exceptions[18]—will create undue capacity strains upon Nasdaq, both as the SIP and as a market Participant.

The Committee, therefore, proposes to establish certain limitations upon the practice of auto-quoting to which Participants must adhere. In the event that a Participant should exceed the auto-quoting limitations, the SIP shall have the ability to initiate proceedings, before the entire Committee, which will put the Participant on notice of the violation and afford ample time and procedure to rectify the situation.[19]

Finally, in Section VI.C.2., the Participants also propose to include a provision for the termination of the auto-quoting limitations upon the implementation of a new Processor by the Committee, as well as a proposed ''grandfather clause'' exempting from the auto-quoting limitations and the

[13] Section III had defined a Limited Participant to mean a registered national securities exchange whose participation in the Plan is restricted to reporting to the Processor Quotation Information and Transaction Reports in NASDAQ/NMS securities listed on that exchange Upon Effectiveness of the Plan.

[14] NASD Rule 4200 defines Nasdaq SmallCap Market security as ''any authorized security in The Nasdaq SmallCap Market which (1) satisfies all applicable requirements of the Rule 4300 Series other than a Nasdaq National Market security; (2) is a right to purchase such security; or (3) is a warrant to subscribe to such security.''

[15] *See* letter to Mr. Robert L.D. Colby, Deputy Director, Division of Market Regulation, SEC and Mr. Robert E. Aber, Nasdaq from Thomas E. Connaghan, PCX, dated October 16, 2000. In its October 16, 2000 letter, the PCX requested that the Commission issue a directive that would expand the number of Eligible Securities traded under the Plan from 1,000 to ''all'' Nasdaq/NM securities. Among other reasons, PCX argued that such an expansion would ''help improve competition and increase transparency and order interaction in the market for those additional securities by increasing the number of market centers in which they may be traded.''

In a subsequent letter to Messrs. Colby and Aber from Mr. Connaghan, dated November 20, 2000, the PCX amended its October 16, 2000 petition with a request to include all Nasdaq SmallCap Market Securities in the definition of Eligible Securities for the same reasons expressed in the October 16, 2000 letter. PCX also noted that an inclusion of the Nasdaq SmallCap stocks could lead to better executions in those securities for investors.

As of the date of this filing, the Commission has not formally responded to PCX's petition.

[16] The Committee included this section to the Plan pursuant to a Commission mandate set forth in the order approving the proposed rule change by the NASD relating to the establishment of the Nasdaq Order Display Facility and Order Collector Facility and modifications of the Nasdaq Trading Platform (''SuperMontage Order''). *See* Securities Exchange Act Release No. 43863 (January 19, 2001), 66 FR 8020 (January 26, 2001). In the SuperMontage Order, the Commission required that the Plan Participants negotiate a revised Plan that provides for either a fully viable alternative exclusive SIP for all Nasdaq securities, or a fully viable alternative non-exclusive SIP.

[17] *See* proposed Section VI.C.2(a)(v) and proposed Section VI.C.2(b).

[18] The limitations on the practice of auto-quoting would not apply to situations in which: (a) an update is in response to an execution in the security by that auto-quoting Participant; (b) an update requires a physical entry; (c) an update reflects the receipt, execution, or cancellation of a customer order; or (d) the practice of automatically generating quote changes is at a rate less than 35% of all price changes to the national best bid or ask quotation. *See* proposed Section VI.C.2.b (i–iv). Also, the limitations would not apply to any Participant whose aggregated quoting activity in Eligible Securities does not exceed 1% of the total quotation traffic across all Nasdaq securities.

[19] The Participants propose a notice and cure period in which a Participant may rectify the situation on its own accord, as well as providing for formal proceedings to be held before the Committee before any remedial action may be taken against a violating Participant. *See* proposed Section VI.C.2(e).

phase-in schedule any Participant for the number of securities in which the Participant posted quotes as of May 1, 2001.[20]

10. Section VIII.C. is proposed to be amended to reflect the inclusion of the BSE and the Amex into the Plan, as well as reflecting the official removal of the CBOE from the Plan.

11. *Section X Regulatory Halts.* The Participants propose to amend this section to provide procedures that the Processor must follow to notify Participants when regulatory halts occur.

12. *Section XI. Hours of Operation.* The Participants propose to establish reporting procedures for Participants who execute transactions in Eligible Securities outside of the normal trading hours of 9:30 a.m. EST to 4:01:30 p.m. EST.

13. *Section XIX. Operational Issues.* The Participants propose this new section to establish Participant responsibilities in the collection, validation, and transmission of data to the Processor. In addition, Section XIX would establish operational procedures that the Processor must follow in the collection of data from Participants; such as performing gross validation processing for quotes and last sale messages and consolidation and dissemination of trade and quote information from each Participant.

14. In the 12th Amendment to the Plan, the Participants also propose to amend Exhibit 1 to the Plan. Currently, Exhibit 1 contains, in part, the provisions for distributing revenue generated by the dissemination of trade data to participating Vendors. The Participants propose to amend Exhibit 1 to delete Sections B and C, which related to the making of fixed payments to the CHX (Section B) and the payment to all other Exchange Participants of operating income based upon certain ''minimum-maximum'' payment formulae. The ''minimum-maximum'' provisions established a means for distributing revenue, as well as reimbursing the original Plan Participants for start-up costs incurred in the original formulation of the SIP and the Plan (Section C).

The amendments to Exhibit 1 include new formulae for determining Participants' total trades, total share volume, operating expenses, and operating income for the purposes of distribution of gross operating revenue to the Participants, as well as a provision for reimbursing the Processor in the event that operating expenses exceed operating revenues.

In addition, the amendments to Exhibit 1 include eligibility criteria and schedules for determining Participant eligibility for receiving distributions of gross operating revenue. Finally, the amendments to Exhibit 1 establish procedures and cost allocations for retaining an independent auditor for the purpose of auditing the Processor's costs or other calculations used in the determination of operating expenses, operating revenues, and distribution shares, among other calculations.

15. Within the body of the 12th Amendment, the Participants propose numerous ''house-keeping'' corrections, such as changing the term ''NASDAQ'' to ''Nasdaq'' and ensuring that references to amended sections are consistent with the amendments discussed above.

B. Governing or Constituent Documents

Not applicable.

C. Implementation of Amendment

The changes proposed in the Amendment are intended to be implemented immediately upon approval by the Commission. All Participants have executed a copy of the 12th Amendment and there are no contingencies that shall delay the effectiveness of the Amendment other than the proposed phase-in schedule of Eligible Securities.[21]

D. Development and Implementation Phase

As noted *supra,* Section VI.C.2, Eligible Securities, would establish a schedule in which all Nasdaq securities will become eligible for trading pursuant to UTP. The proposed phase-in will commence by September 30, 2001, or on such date as determined by the Commission, with the suggested inclusion of 1,000 Nasdaq securities, in addition to the securities currently eligible for trading pursuant to UTP. The proposal then would permit Participants to trade an additional 500 securities at the end of each of the following four calendar quarters. At the end of the fifth calendar quarter following September 30, 2001, all remaining Nasdaq securities shall become eligible for trading under the Plan.

E. Analysis of Impact on Competition

The signatories to the Plan believe that the amendment will impose no burden on competition. On the contrary, the Participants believe that the proposed Amendment stems much from mandates and recommendations made by the Commission and serves to (1) Remove provisions that previously served to differentiate Participants from each other; (2) provide for the inclusion of all Nasdaq securities in the Plan; (3) provide for a unified system of revenue sharing for all Participants; and (4) lessen the burden to entry for new Participants joining the Plan.

The proposed Amendment removes all previous distinctions that the Plan made between ''Limited Participants'' and ''Participants.'' [22] Under the proposed Amendment, once a party becomes a Participant, it immediately shares all rights and obligations equally with all other Participants, including the sharing of eligible Plan revenues. The only requirement is that the new Participant contribute an equal share of the original development costs previously paid by the current Participants.[23]

The proposed Amendment eliminates the ''minimum'' and ''maximum'' limitations on revenue distributions to the Participants and implements a program that the Participants believe is consistent with the fair competition requirements of Section 11A of the Act.[24] Section B to Exhibit 1 of the Plan previously limited the amount of eligible revenue that some Participants were entitled to receive, as well as established a minimum amount that Participants would receive. Although the ''minimum-maximum'' provisions were originally included to provide a mechanism to compensate certain original Plan Participants for development costs incurred in the implementation of the Plan, the Committee believes that a more equitable method than the ''minimum-maximum'' formula should be employed. Therefore, the Amendment now provides for the distribution of Plan revenue pro rata to each Participant based on each Participant's respective contribution to total Plan revenues.

The proposed Amendment also extends the definition of Eligible Security to include Nasdaq SmallCap [25] securities. In the event the Commission approves Nasdaq's registration as a national securities exchange, pursuant to the Act, all Nasdaq SmallCap

[20] *See* proposed Section VI.C.2(f).

[21] *See* Section D of this filing for an explanation of the proposed ''phase-in'' schedule.

[22] ''Limited Participant'' referred to a registered national securities exchange whose participation in the Plan was restricted to reporting to the Processor quotation information and transaction reports in Nasdaq/NM securities listed on that exchange upon effectiveness of the Plan. *See* Previous Section III(E) of the Plan.

[23] *See* proposed Section XIV.A. of the Plan.

[24] 15 U.S.C. 78k–1.

[25] As defined by NASD Rule 4200.

securities will be eligible for trading pursuant to UTP. This inclusion anticipates compliance with the securities laws and, concurrently, gives access to the trading of Nasdaq SmallCap securities to all Participants equally.

F. Written Understandings or Agreements Relating to Interpretation of, or Participation in, the Plan

Not applicable.

G. Approval by Sponsors in Accordance with the Plan

Under Section XVII, Modifications to Plan, any amendment to the Plan requires the unanimous execution of the Plan by each Plan Participant. Each Voting Participant has executed a copy of this Amendment and copies of such documents will be maintained by the Secretary of the Committee.

H. Description of Operation of Facility Contemplated by the Proposed Amendment

Not applicable.

I. Terms and Conditions of Access

Not applicable.

J. Method of Determination and Imposition, and Amount of, Fees and Charges

The proposed Amendment does not effect a change to the determination, imposition, or amount of fees and charges.

K. Method and Frequency of Processor Evaluation

Not applicable.

L. Dispute Resolution

Not applicable.

IV. Rule 11Aa3–1 [26]

A. Nasdaq Securities for Which Transactions Reports Shall Be Required by the Plan

The Plan will govern trading in both Nasdaq/NM securities and, is proposed to govern transaction reporting of all Nasdaq SmallCap securities.

B. Reporting Requirements With Respect to Transactions in Nasdaq Securities for any Broker or Dealer Subject to the Plan

Not applicable.

C. Manner of Collecting, Processing, Sequencing, Making Available and Disseminating Last Sale Information

Not applicable.

D. Manner of Consolidation

Not applicable.

E. Standards and Methods Ensuring Promptness, Accuracy and Completeness of Transaction Reports

Not applicable.

F. Rules and Procedures Addressed to Fraudulent or Manipulative Dissemination

Not applicable.

G. Terms of Access to Transaction Reports

Not applicable.

H. Identification of Marketplace of Execution

Not applicable.

V. Date of Effectiveness of the Proposed Amendment

The Commission has determined that the addition of Amex and BSE as full Participants under the Plan is technical in nature, and thus has become effective upon filing with the Commission.[27] In addition, the Commission has decided, pursuant to Rule 11Aa3–2(c)(4) under the Act to put Exhibit 1 to the 12th Amendment, which, among other things, governs the calculation and distribution of revenues generated under the Plan, into effect summarily upon publication of this notice of amendment in the **Federal Register** on a temporary basis not to exceed 120 days. The Commission believes that it is appropriate to put Exhibit 1 to the 12th Amendment into effect summarily because it contains more equitable formulas for the calculation and allocation of revenues than are currently used, which the Commission believes should remove impediments to and, perfect the mechanism of, a national market system.

The Commission, as described further below, requests comment on the remaining provisions of 12th Amendment.

VI. Solicitation of Comments

In addition to general comments on 12th Amendment, the Commission specifically requests comment on whether SmallCap securities should be considered Eligible Securities under the Plan. Further, the Commission continues to request comment on whether the Commission should expand the number of securities considered eligible under the Plan, pursuant to Section 12 of the Act,[28] and if so, by how many.[29] In addition, the Commission requests comment on whether the phase-in proposal is appropriate.

Interested persons are invited to submit written data, views, and arguments concerning the foregoing, including whether the proposal is consistent with the Act. Persons making written submissions should file six copies thereof with the Secretary, Securities and Exchange Commission, 450 Fifth Street, NW., Washington, DC 20549–0609. Copies of the submission, all subsequent amendments, all written statements with respect to the proposed amendment that are filed with the Commission, and all written communications relating to the proposal between the Commission and any person, other than those that may be withheld from the public in accordance with the provisions of 5 U.S.C. 552, will be available for inspection and copying in the Commission's Public Reference Room. The 12th Amendment is being published as Exhibit A to this proposal. Copies of the amendment will also be available for inspection and copying at the office of the Secretary of the Committee, currently located at the CSE, One Financial Place, 440 South LaSalle St., Suite 2600, Chicago, IL 60126. All submissions should refer to File No S7–24–89 and be submitted by October 23, 2001.

For the Commission, by the Division of Market Regulation, pursuant to delegated authority.[30]

Margaret H. McFarland,

Deputy Secretary.

Exhibit A

Amendment No. 12: Joint Self-Regulatory Organization Plan Governing The Collection, Consolidation and Dissemination of Quotation and Transaction Information for Nasdaq-Listed Securities Traded on Exchanges on an Unlisted Trading Privilege Basis

The undersigned registered national securities association and national securities exchanges (collectively referred to as the ''Participants''), have jointly developed and hereby enter into this Nasdaq Unlisted Trading Privileges Plan (''Nasdaq UTP Plan'' or ''Plan'').

I. Participants.

The Participants include the following:

A. Participants

1. American Stock Exchange, Inc., 86 Trinity Place, New York, New York 10006
2. Boston Stock Exchange, 100 Franklin Street, Boston, Massachusetts 02110
3. Chicago Stock Exchange, 440 South LaSalle Street, Chicago, Illinois 60605
4. Cincinnati Stock Exchange, 440 South LaSalle Street, 26th Floor, Chicago, Illinois 60605

[26] 17 CFR 240.11Aa3–1.

[27] 17 CFR 240.11Aa3–2(c)(3)(iii).

[28] 15 U.S.C. 78l.

[29] See Securities Exchange Act Release No. 43545 (November 9, 2000), 65 FR 69581 (November 17, 2000).

[30] 17 CFR 200.30–3(a)(27).

5. National Association of Securities Dealers, Inc., 1735 K Street, NW., Washington, DC 20006
6. Pacific Exchange, Inc., 301 Pine Street, San Francisco, CA 94104
7. Philadelphia Stock Exchange, 1900 Market Street, Philadelphia, Pennsylvania 19103

B. Additional Participants

Any other national securities association or national securities exchange, in whose market Eligible Securities become traded, may become a Participant, provided that said organization executes a copy of this Plan and pays its share of development costs as specified in Section XIV.

II. Purpose of Plan

The purpose of this Plan is to provide for the collection, consolidation and dissemination of Quotation Information and Transaction Reports in Eligible Securities from the Participants in a manner consistent with the Exchange Act.

It is expressly understood that each Participant shall be responsible for the collection of Quotation Information and Transaction Reports within its market and that nothing in this Plan shall be deemed to govern or apply to the manner in which each Participant does so.

III. Definitions

A. ''Current'' means, with respect to Transaction Reports or Quotation Information, such Transaction Reports or Quotation Information during the fifteen (15) minute period immediately following the initial transmission thereof by the Processor.

B. ''Eligible Security'' means any Nasdaq National Market or Nasdaq SmallCap security, as defined in NASD Rule 4200: (i) As to which unlisted trading privileges have been granted to a national securities exchange pursuant to Section 12(f) of the Exchange Act or which become eligible for such trading pursuant to order of the Securities and Exchange Commission; or (ii) which also is listed on a national securities exchange.

C. ''Commission'' and ''SEC'' shall mean the U.S. Securities and Exchange Commission.

D. ''Exchange Act'' means the Securities Exchange Act of 1934.

E. ''Market'' shall mean (i) when used with respect to Quotation Information, the NASD in the case of a Nasdaq market maker or a Nasdaq-registered electronic communications network/alternative trading system (hereafter collectively referred to as ''Nasdaq market participants'') acting in such capacity, or the Participant on whose floor or through whose facilities the quotation was disseminated; and (ii) when used with respect to Transaction Reports, the Participant through whose facilities the transaction took place or was reported, or the Participant to whose facilities the order was sent for execution.

F. ''NASD'' means the National Association of Securities Dealers Inc.

G. ''NASD Transaction Reporting System'' means the System provided for in the NASD's Transaction Reporting Plan filed with and approved by the Commission pursuant to SEC Rule11Aa3–1, governing the reporting of transactions in Nasdaq securities.

H. ''Nasdaq Level 1 Service'' means the service that provides Subscribers with the best bid and asked quotations and size in Eligible Securities from all Participants.

I. ''Nasdaq Level 2 Service'' means the Nasdaq service that provides Subscribers with query capability with respect to quotations and sizes in securities included in the Nasdaq System, best bid and asked quotations, and Transaction Reports.

J. ''Nasdaq Level 3 Service'' means the Nasdaq service that provides Nasdaq market participants with input and query capability with respect to quotations and sizes in securities included in the Nasdaq System, best bid and asked quotations, and Transaction Reports.

K. ''Nasdaq System'' means the automated quotation system operated by Nasdaq.

L. ''Nasdaq Last Sale Information Service'' means the service of Nasdaq that provides Vendors and Subscribers with Transaction Reports.

M. ''Nasdaq Security'' or ''Nasdaq-listed Security'' means any security listed on the Nasdaq National Market or Nasdaq SmallCap Market.

N. ''News Service'' means a person that receives Transaction Reports or Quotation Information provided by the Systems or provided by a Vendor, on a Current basis, in connection with such person's business of furnishing such information to newspapers, radio and television stations and other news media, for publication at least fifteen (15) minutes following the time when the information first has been published by the Processor.

O. ''NQDS'' means the Nasdaq Quotation Dissemination Service, a data stream of information that provides Vendors and Subscribers with quotations and sizes from all Participants and Nasdaq market participants.

P. ''Participant'' means a registered national securities exchange or national securities association that is a signatory to this Plan.

Q. ''Plan'' means this Nasdaq UTP Plan, as from time to time amended according to its provisions, governing the collection, consolidation and dissemination of Quotation Information and Transaction Reports in Eligible Securities.

R. ''Processor'' means the entity selected by the Participants to perform the processing functions set forth in the Plan.

S. ''Quotation Information'' means all bids, offers, quotation sizes, the Market and, in the case of Nasdaq, the Nasdaq market participant that entered the quotation, withdrawals and other information pertaining to quotations in Eligible Securities required to be collected and made available to the Processor pursuant to this Plan.

T. ''Regulatory Halt'' means a trade suspension or halt called for the purpose of dissemination of material news, as described at Section X hereof.

U. ''Subscriber'' means a person that receives Current Quotation Information or Transaction Reports provided by the Processor or provided by a Vendor, for its own use or for distribution on a non-Current basis, other than in connection with its activities as a Vendor.

V. ''Transaction Reports'' means reports required to be collected and made available pursuant to this Plan containing the stock symbol, price, and size of the transaction executed, the Market in which the transaction was executed, and related information, including a buy/sell/cross indicator and trade modifiers, reflecting completed transactions in Eligible Securities.

W. ''Upon Effectiveness of the Plan'' means July 12, 1993, the date on which the Participants commenced publication of Quotation Information and Transaction Reports on Eligible Securities as contemplated by this Plan.

X. ''Vendor'' means a person that receives Current Quotation Information or Transaction Reports provided by the Processor or provided by a Vendor, in connection with such person's business of distributing, publishing, or otherwise furnishing such information on a Current basis to Subscribers, News Services or other Vendors.

IV. Administration of Plan

A. Operating Committee: Composition

The Plan shall be administered by the Participants through an operating committee (''Operating Committee''), which shall be composed of one representative designated by each Participant. Each Participant may designate an alternate representative or representatives who shall be authorized to act on behalf of the Participant in the absence of the designated representative. Within the areas of its responsibilities and authority, decisions made or actions taken by the Operating Committee, directly or by duly delegated individuals, committees as may be established from time to time, or others, shall be binding upon each Participant, without prejudice to the rights of any Participant to seek redress from the SEC pursuant to Rule 11Aa3–2 under the Exchange Act or in any other appropriate forum.

B. Operating Committee: Authority

The Operating Committee shall be responsible for:

1. Overseeing the consolidation of Quotation Information and Transaction Reports in Eligible Securities from the Participants for dissemination to Vendors, Subscribers, News Services and others in accordance with the provisions of the Plan;
2. Periodically evaluating the Processor;
3. Setting the level of fees to be paid by Vendors, Subscribers, News Services or others for services relating to Quotation Information or Transaction Reports in Eligible Securities, and taking action in respect thereto in accordance with the provisions of the Plan;
4. Determining matters involving the interpretation of the provisions of the Plan;
5. Determining matters relating to the Plan's provisions for cost allocation and revenue-sharing; and
6. Carrying out such other specific responsibilities as provided under the Plan.

C. Operating Committee: Voting

Each Participant shall have one vote on all matters considered by the Operating Committee.

1. With respect to:

a. amendments to the Plan;

b. amendments to contracts between the Processor and Vendors, Subscribers, News Services and others receiving Quotation Information and Transaction Reports in Eligible Securities;

c. replacement of the Processor, except for termination for cause, which shall be governed by Section V(B) hereof;

d. reductions in existing fees relating to Quotation Information and Transaction Reports in Eligible Securities; and

e. except as provided under Section IV(C)(3) hereof, requests for system changes submitted after the expiration of 12 months from the beginning of the Plan's operation; and

f. all other matters not specifically addressed by the Plan, the affirmative and unanimous vote of all Participants entitled to vote shall be necessary to constitute the action of the Operating Committee.

2. With respect to the establishment of new fees or increases in existing fees relating to Quotation Information and Transaction Reports in Eligible Securities, the affirmative vote of two-thirds of the Participants entitled to vote shall be necessary to constitute the action of the Operating Committee.

3. With respect to requests for system changes reasonably related to the function of the Processor as defined under the Plan and submitted after the expiration of 12 months from the beginning of the Plan's operation, the affirmative vote of a majority of the Participants entitled to vote shall be necessary to constitute the action of the Operating Committee. All other requests for system changes shall be governed by Section IV(C)(1)(e) hereof. It is expressly agreed and understood that no system changes shall be made during the first 12 months after the beginning of the Plan's operation.

4. With respect to:

a. interpretive matters and decisions of the Operating Committee arising under, or specifically required to be taken by, the provisions of the Plan as written;

b. interpretive matters arising under Exchange Act Rules 11Aa3–1 and 11Acl–1; and

c. denials of access (other than for breach of contract, which shall be handled by the Processor),

The affirmative vote of a majority of the Participants entitled to vote shall be necessary to constitute the action of the Operating Committee.

5. It is expressly agreed and understood that the Operating Committee shall have no authority in any respect over the collection and dissemination of quotation or transaction information in Eligible Securities from and to Nasdaq market participants within, or to, the Nasdaq marketplace, e.g., the fees to be charged therefore or the format in which displays shall be made. Nor shall the Operating Committee have any authority over the collection and dissemination of quotation or transaction information in Eligible Securities in any other Participant's marketplace.

D. Operating Committee: Meetings

Regular meetings of the Operating Committee may be attended by each Participant's designated representative and/or its alternate representative(s), and may be attended by one or more other representatives of the parties. Meetings shall be held at such times and locations as shall from time to time be determined by the Operating Committee.

Quorum: Any action requiring a vote only can be taken at a meeting in which a quorum of all Participants is present. For actions requiring a simple majority vote of all Participants, a quorum of greater than 50% of all Participants entitled to vote must be present at the meeting before such a vote may be taken. For actions requiring a 2/3rd majority vote of all Participants, a quorum of at least 2/3rd of all Participants entitled to vote must be present at the meeting before such a vote may be taken. For actions requiring a unanimous vote of all Participants, a quorum of all Participants entitled to vote must be present at the meeting before such a vote may be taken.

A Participant is considered present at a meeting only if a Participant's designated representative or alternate representative(s) is either in physical attendance at the meeting or is participating by conference telephone, or other acceptable electronic means.

Any action sought to be resolved at a meeting must be sent to each Participant entitled to vote on such matter at least one week prior to the meeting via electronic mail, regular U.S. or private mail, or facsimile transmission.

Any action may be taken without a meeting if a consent in writing, setting forth the action so taken, is sent to and signed by all Participant representatives entitled to vote with respect to the subject matter thereof. All the approvals evidencing the consent shall be delivered to the Chairman of the Operating Committee to be filed in the Operating Committee records. The action taken shall be effective when the minimum number of Participants entitled to vote have approved the action, unless the consent specifies a different effective date.

The Chairman of the Operating Committee shall be elected annually by and from among the Participants by a majority vote of all Participants entitled to vote. The Chairman shall designate a person to act as Secretary to record the minutes of each meeting. The location of meetings shall be rotated among the locations of the principal offices of the Participants, or such other locations as may from time to time be determined by the Operating Committee. Meetings may be held by conference telephone and action may be taken without a meeting if the representatives of all Participants entitled to vote consent thereto in writing or other means the Operating Committee deems acceptable.

V. Selection and Evaluation of the Processor

A. Generally

Subject to the provisions of paragraph (V)(B) hereof, Nasdaq shall be the Processor under the Plan and shall function as such for an initial term of five (5) years, such term Commencing Upon the Effectiveness of the Plan. The Processor's performance of its functions under the Plan shall be subject to review by the Operating Committee during the fifth year of the initial five (5) year term and periodically (at least every two years, or from time to time upon the request of any two Participants but not more frequently than once each year) thereafter. Based on this review, the Operating Committee may choose to make a recommendation to the Participants with respect to the continuing operation of the Processor. The Operating Committee shall notify the SEC of any recommendations the Operating Committee shall make pursuant to the Operating Committee's review of the Processor and shall supply the Commission with a copy of any reports that may be prepared in connection therewith.

B. Termination of the Processor for Cause

If the Operating Committee determines that the Processor has failed to perform its functions in a reasonably acceptable manner in accordance with the provisions of the Plan or that its reimbursable expenses have become excessive and are not justified on a cost basis, the Processor may be terminated at such time as may be determined by a majority vote of the Operating Committee.

C. Factors To Be Considered in Termination for Cause

Among the factors to be considered in evaluating whether the Processor has performed its functions in a reasonably acceptable manner in accordance with the provisions of the Plan shall be the reasonableness of its response to requests from Participants for technological changes or enhancements pursuant to Section IV(C)(3) hereof. The reasonableness of the Processor's response to such requests shall be evaluated by the Operating Committee in terms of the cost to the Processor of purchasing the same service from a third party and integrating such service into the Processor's existing systems and operations as well as the extent to which the requested change would adversely impact the then current technical (as opposed to business or competitive) operations of the Processor.

D. Processor's Right to Appeal Termination for Cause

The Processor shall have the right to appeal to the SEC a determination of the Operating Committee terminating the Processor for cause and no action shall become final until the SEC has ruled on the matter and all legal appeals of right therefrom have been exhausted.

E. Process for Selecting New Processor

At any time following effectiveness of the Plan, but no later than upon the termination of the Processor, whether for cause pursuant to Section IV(C)(1)(c) or V(B) of the Plan or upon the Processor's resignation, the Operating Committee shall establish procedures for selecting a new Processor (the ''Selection Procedures''). The Operating Committee, as part of the process of establishing Selection Procedures, may solicit and consider the timely comment of any entity affected by the operation of this Plan. The Selection Procedures shall be established by a two-thirds majority vote of

the Plan Participants, and shall set forth, at a minimum:

1. The entity that will:

(a) Draft the Operating Committee's request for proposal for bids on a new processor;

(b) Assist the Operating Committee in evaluating bids for the new processor; and

(c) Otherwise provide assistance and guidance to the Operating Committee in the selection process.

2. The minimum technical and operational requirements to be fulfilled by the Processor;

3. The criteria to be considered in selecting the Processor; and

4. The entities (other than Plan Participants) that are eligible to comment on the selection of the Processor.

Nothing in this provision shall be interpreted as limiting Participants' rights under Section IV or Section V of the Plan or other Commission order.

VI. Functions of the Processor

A. Generally

The Processor shall collect from the Participants, and consolidate and disseminate to Vendors, Subscribers and News Services, Quotation Information and Transaction Reports in Eligible Securities in a manner designed to assure the prompt, accurate and reliable collection, processing and dissemination of information with respect to all Eligible Securities in a fair and non-discriminatory manner. The Processor shall commence operations upon the Processor's notification to the Participants that it is ready and able to commence such operations.

B. Collection and Consolidation of Information

The Processor shall be capable of receiving Quotation Information and Transaction Reports in Eligible Securities from Participants by computer-to-computer interface, and from Nasdaq market participants by Nasdaq-approved devices, and shall consolidate and disseminate such information to Vendors, Subscribers and News Services.

C. Dissemination of Information

The Processor shall disseminate consolidated Quotation Information and Transaction Reports in Eligible Securities to authorized Vendors, Subscribers and News Services in a fair and non-discriminatory manner. The Processor shall specifically be permitted to enter into agreements with Vendors, Subscribers and News Services for the dissemination of quotation or transaction information on Eligible Securities to foreign (non-U.S.) marketplaces or in foreign countries.

The Processor shall, in such instance, disseminate consolidated quotation or transaction information on Eligible Securities from all Participants.

Nothing herein shall be construed so as to prohibit or restrict in any way the right of any Participant to distribute quotation, transaction or other information with respect to Eligible Securities quoted on or traded in its marketplace to a marketplace outside the United States solely for the purpose of supporting an intermarket linkage, or to distribute information within its own marketplace concerning Eligible Securities in accordance with its own format. If a Participant requests, the Processor shall make information about Eligible Securities in the Participant's marketplace available to a foreign marketplace on behalf of the requesting Participant, in which event the cost shall be borne by that Participant.

Nothing herein shall be construed to affect in any way the existing agreements between the NASD and the London Stock Exchange (now the International Stock Exchange of the United Kingdom and the Republic of Ireland) entered into on April 22, 1986, and between the Singapore Stock Exchange and the NASD executed on June 26, 1987, or the right to amend, modify, or change these agreements in such a manner as is mutually agreed to by them, or to enter into other agreements mutually agreeable to them; provided that such agreements shall not permit the International or Singapore Exchanges to enter into any agreement with a Vendor not affiliated with any such Exchange to redistribute information with respect to Eligible Securities to persons not otherwise receiving such information pursuant to the agreement with such Exchange, except on terms and conditions approved by the Processor.

1. Best Bid and Offer

The Processor shall disseminate on Level 1 a consolidated best bid and asked quotation with size based upon Quotation Information for Eligible Securities received from Participants and Nasdaq market participants. The Market responsible for each side of the best bid and asked quotation making up the consolidated quotation shall be identified by an appropriate symbol. If the quotations of more than one Participant are the same, the earliest measured by the time reported shall be deemed to be the best. The consolidated size shall be the size of the Participant that is at the best. If a Nasdaq market participant is at the best, the consolidated size for NASD shall be the largest size among those Nasdaq participants whose quotations are earlier in time than the first Participant at that price. If an Exchange or individual Nasdaq market participant changes its quote (i.e. bid quote and/or ask quote), it will lose its ranking within the price/time priority. A change to only bid size and/or ask size will not change the time priority of an Exchange's or Nasdaq market participant's quote. The Processor will carry over Participant quotes from the previous day to alleviate the need for each Participant to re-enter a quote when there is no change from its previous day's quote. The Processor shall also retain the quotations of all Participants (Exchange Participants and Nasdaq market participants) from the previous day. These previous day quotes shall be used in the calculation of the consolidated best bid/best offer until an updated quote is received by the Processor. If the best bid/best offer results in a locked or crossed quotation, the Processor shall forward that locked or crossed quote on the appropriate output lines (i.e. a crossed quote of bid 12, ask 11⅞ shall be disseminated). The Processor shall normally cease the calculation of the best bid/best offer after 6:30 p.m., Eastern Time.

2. Eligible Securities

a. Number of Eligible Securities—If the Commission by order expands the number of Eligible Securities beyond 1,000, the number of Eligible Securities that Participants may trade shall be phased in (added) according to the schedule set out below:

(i) at the end of the first calendar quarter following the Commission's order expanding the number of Eligible Securities beyond 1,000 but in no case before September 30, 2001, Participants may commence trading 500 additional securities;

(ii) at the end of each of the four calendar quarters following the date established under provision VI.C(2)(a)(i) of the Plan, Participants may commence trading an additional 500 securities, and at the end of the fifth calendar quarter following the date established under provision VI.C(2)(a)(i) of the Plan, Participants shall be permitted to trade all Eligible Securities.

(iii) in no case shall the number of Eligible Securities exceed the number of securities that the Commission deems are eligible for trading pursuant to this Plan.

(iv) after each of the aforementioned phase in periods (*i.e.,* calendar quarters), the Processor shall evaluate its performance to determine whether it is prudent, in light of system capacity and any other operational factors, to continue to add additional securities pursuant to the phase in schedule. If the Processor determines, in light of system capacity and any other operational factors, that it is not prudent to continue to expand the number of Eligible Securities, the Processor upon notice to the Participants immediately may suspend the phase-in schedule and delay the expansion of the number of Eligible Securities that may be traded under the Plan. The Processor shall commence adding securities pursuant to a revised phase-in schedule, when the Processor determines it is prudent to do so, in light of system capacity and any other operational factors.

(v) This provision shall not apply to The Nasdaq Stock Market, Inc., or Nasdaq market participants acting in such capacity, nor shall it apply to any Participant that does not engage in auto-quoting, as described in paragraph VI.C.(2)(b) below.

b. Limitation on Auto-Quoting—Except as provided in sub-paragraph VI.C(2)(c) of this Plan, Participants shall be prohibited from the practice of ''auto-quoting.'' ''Auto-quoting'' means the practice of tracking, by automated means, the changes to the best bid or best ask quotation and responding by generating another quote change to keep that Participant away from the best bid or ask quotation, but for purposes of this Plan, shall not include:

(i) An update that is in response to an execution in the security by that Participant;

(ii) An update that requires a physical entry;

(iii) An update that is to reflect the receipt, execution, or cancellation of a customer limit order; or

(iv) The practice of automatically generating quote changes at a rate of less than 35% of all price changes to the national best bid or ask quotation. The Processor shall calculate this rate using quoting activity during the preceding calendar month.

c. Applicability of Auto-Quoting Limitation—The Limitation on Auto-Quoting contained in subparagraph VI.C(2)(b) of this Plan shall only apply if the Processor deems it necessary to maintain adequate capacity for the normal and efficient operation of the Processor and the Processor provides at least 30 calendar days notice to the Participants and the basis thereof of such determination. The Processor shall lift the limitation on auto-quoting when the Processor determines it is prudent to do so, in light of system capacity and any other operational factors. Additionally, the Limitation on Auto-Quoting set forth in subparagraph VI.C(2)(b) of this Plan will not apply to a Participant whose aggregated quoting activity in eligible Nasdaq securities does not exceed 1% of the total quotation traffic across all Nasdaq securities by all Nasdaq market participants and Exchange Participants. The Processor shall calculate this rate using quoting activity during the preceding calendar month.

d. Obligations of Participants Regarding Capacity—Each Participant shall exercise due diligence to promote quotation generation practices that mitigate quotation traffic so as to ensure prudential excess capacity within the Processor. The Operating Committee shall periodically review the performance of Participants and take such action as necessary to maintain prudential excess capacity.

e. Procedures for Ensuring Acceptable Quote Generation Practices—The following procedures shall apply if, in accordance with Section VI.C.2(c) of the Plan, the Processor determines that a capacity concern exists.

(i) On a monthly basis, each Participant shall provide the Processor with a good faith estimate of the Participant's previous month's daily average number of quote updates to permit the Processor to determine compliance with the auto-quoting limitation referenced in Section VI.C.2.(b) of the Plan.

(ii) If the Processor determines, from the Participant's data or otherwise, that the Participant has not complied with the limitations of Section VI.C.2.(b), the Processor shall give the Participant written notice of such condition. The Participant shall have 30 calendar days after receipt of the written notice to remedy the condition.

(iii) If, after the aforementioned 30-day period has expired, the condition has not been remedied to the reasonable satisfaction of the Processor, then the Processor shall submit to the Operating Committee a written request for relief together with supporting documentation evidencing the alleged condition (*i.e.,* failure to comply with the limitations of Section VI.C.2.(b)) and quantifying the impact of the violation on overall capacity of the Processor. The Processor's request for relief shall be limited to such remedial action (including but not limited to the termination of service to the subject Participant) as is necessary to modify the subject Participant's quote generation practices on a prospective basis, for such period as is necessary to resolve the condition that gave rise to the Processor's request for relief. The Participant shall have 15 calendar days to respond in writing to the Processor's request for relief.

(iv) The Operating Committee, following written notice to the Participant and the Processor, shall conduct a hearing within five (5) business days after expiration of the 15-day response period to determine whether to grant or deny the Processor's claim for remedial action. At the hearing, the Operating Committee may consider, among other information, the request of the Processor, the response (if any) of the Participant and any other evidence (written or oral) that is presented at the hearing. At the conclusion of the hearing, the Operating Committee shall grant or deny the Processor's request. An affirmative vote of two-thirds of the Operating Committee members entitled to vote (excluding the subject Participant) shall be required for any decision of the Operating Committee. The decision of the Operating Committee shall be final and therefore reviewable by the Commission; *provided, however,* that any decision of the Operating Committee shall not become effective until five business days after the date of the decision.

f. Limitation on Applicability of Rule—The phase-in schedule contained in of VI.C(2)(a) and the Limitation on Auto-Quoting contained in VI.C(2)(c) shall not apply :

(i) to any Participant upon the designation and the operation of a new Processor; and

(ii) to a Participant for the number of securities that the Participant quoted as of May 1, 2001; provided, however the exemption contained herein shall expire a year from the end-date of the phase-in schedule contained in VI.C(2)(a).

3. Full Quotation Data Stream

The Processor shall disseminate on NQDS a data stream of all Quotation Information regarding Eligible Securities received from Participants. Each quotation shall be designated with a symbol identifying the Participant or Nasdaq market participant from which the quotation emanates.

4. Transaction Reports

The Processor shall disseminate on the Nasdaq Last Sale Information Service a data stream of all Transaction Reports in Eligible Securities received from Participants. Each transaction report shall be designated with a symbol identifying the Participant in whose Market the transaction took place.

D. Immediate Hard-Copy Confirmations

At the expense of any requesting Participant(s), the Processor will provide Participants with the ability to obtain immediate hard-copy confirmations of transactions in Eligible Securities.

E. Closing Reports

At the conclusion of each trading day, the Processor shall disseminate a ''closing price'' for each Eligible Security. Such ''closing price'' shall be the price of the last Transaction Report in such security received prior to dissemination. The Processor shall also tabulate and disseminate at the conclusion of each trading day the aggregate volume reflected by all Transaction Reports in Eligible Securities reported by the Participants.

F. Statistics

The Processor shall maintain quarterly, semi-annual and annual transaction and volume statistical counts. The Processor shall, at cost to the user Participant(s), make such statistics available in a form agreed upon by the Operating Committee, such as a secure website.

VII. Administrative Functions of the Processor

Subject to the general direction of the Operating Committee, the Processor shall be responsible for carrying out all administrative functions necessary to the operation and maintenance of the consolidated information collection and dissemination system provided for in this Plan, including, but not limited to, record keeping, billing, contract administration, and the preparation of financial reports.

VIII. Transmission of Information to Processor by Participants

A. Quotation Information

Each Participant shall, during the time it is open for trading be responsible promptly to collect and transmit to the Processor accurate Quotation information in Eligible Securities through any means prescribed herein.

Quotation Information shall include:

1. Identification of the Eligible Security, using the Nasdaq Symbol;
2. The price bid and offered, together with size;
3. The Nasdaq market participant or Participant from which the quotation emanates;
4. Identification of quotations that are not firm; and
5. Through appropriate codes and messages, withdrawals and similar matters.

B. Transaction Reports

Each Participant shall, during the time it is open for trading, be responsible promptly to collect and transmit to the Processor Transaction Reports in Eligible Securities executed in its Market by means prescribed herein. With respect to orders sent by a Participant Market to another Participant Market for execution, each Participant shall adopt procedures governing the reporting of transactions in Eligible Securities specifying that the transaction will be reported by the Participant whose member sold the security.

Transaction Reports shall include:

1. Identification of the Eligible Security, using the Nasdaq Symbol;
2. The number of shares in the transaction;
3. The price at which the shares were purchased or sold;
4. The buy/sell/cross indicator;
5. The Market of execution; and,
6. Through appropriate codes and messages, late or out-of-sequence trades, corrections and similar matters.

All such Transaction Reports shall be transmitted to the Processor within 90 seconds after the time of execution of the transaction. Transaction Reports transmitted beyond the 90-second period shall be designated as ''late'' by the appropriate code or message. If a shared computer-to-computer interface line is used, each transaction report shall include an appropriate exchange identifier that is acceptable for processing by the Processor.

The following types of transactions are not required to be reported to the Processor pursuant to the Plan:

1. Transactions that are part of a primary distribution by an issuer or of a registered secondary distribution or of an unregistered secondary distribution;

2. Transactions made in reliance on Section 4(2) of the Securities Act of 1933;

3. Transactions in which the buyer and the seller have agreed to trade at a price unrelated to the Current Market for the security, e.g., to enable the seller to make a gift;

4. Odd-lot transactions;

5. The acquisition of securities by a broker-dealer as principal in anticipation of making an immediate exchange distribution or exchange offering on an exchange;

6. Purchases of securities pursuant to a tender offer; and

7. Purchases or sales of securities effected upon the exercise of an option pursuant to the terms thereof or the exercise of any other right to acquire securities at a pre-established consideration unrelated to the Current Market.

C. Symbols for Market Identification for Quotation Information and Transaction Reports

The following symbols shall be used to denote the Participant marketplaces:

Code and Participant

A: American Stock Exchange
B: Boston Stock Exchange
C: Cincinnati Stock Exchange
M: Chicago Stock Exchange
Q: NASD
P: Pacific Exchange
X: Philadelphia Stock Exchange

D. Whenever a Participant determines that a level of trading activity or other unusual market conditions prevent it from collecting and transmitting Quotation Information or Transaction Reports to the Processor, or where a trading halt or suspension in an Eligible Security is in effect in its Market, the Participant shall promptly notify the Processor of such condition or event and shall resume collecting and transmitting Quotation Information and Transaction Reports to it as soon as the condition or event is terminated. In the event of a system malfunction resulting in the inability of a Participant or its members to transmit Quotation Information or Transaction Reports to the Processor, the Participant shall promptly notify the Processor of such event or condition. Upon receiving such notification, the Processor shall take appropriate action, including either closing the quotation or purging the system of the affected quotations.

IX. Market Access

A. Each Participant shall permit each Nasdaq market participant, acting in its capacity as such, direct telephone access to the specialist, trading post, and supervisory center in each Eligible Security in which such Nasdaq market participant is registered as a market maker or electronic communications network/alternative trading system with Nasdaq. Such access shall include appropriate procedures or requirements by each Participant or employee to assure the timely response to communications received through telephonic access. No Participant shall permit the imposition of any access or execution fee, or any other fee or charge, with respect to transactions in Eligible Securities effected with Nasdaq market participants which are communicated to the floor by telephone pursuant to the provisions of this Plan. A Participant shall be free to charge for other types of access to its floor or facilities.

B. The NASD shall assure that each Participant, and its members shall have direct telephone access to the trading desk of each Nasdaq market participant in each Eligible Security in which the Participant displays quotations, and to the Nasdaq Supervisory Center. Such access shall include appropriate procedures or requirements to assure the timely response of each Nasdaq market participant to communications received through telephone access. Neither the NASD nor any Nasdaq market participant shall impose any access or execution fee, or any other fee or charge, with respect to transactions in Eligible Securities effected with a member of a Participant which are communicated by telephone pursuant to the provisions of this Plan.

X. Regulatory Halts

A. Whenever, in the exercise of its regulatory functions, the Primary Market for an Eligible Security determines that a Regulatory Halt is appropriate, all other Participants shall also halt or suspend trading in that security until notification that the halt or suspension is no longer in effect. The Primary Market shall immediately notify the Processor of such Regulatory Halt as well as notice of the lifting of a Regulatory Halt. The Processor, in turn, shall disseminate to Participants notice of the Regulatory Halt (as well as notice of the lifting of a regulatory halt) through the Level 1 data vendor feed. This notice shall serve as official notice of a regulatory halt for purposes of the Plan only, and shall not substitute or otherwise supplant notice that a Participant may recognize or require under its own rules. Nothing in this provision shall be read so as to supplant or be inconsistent with a Participant's own rules on trade halts, which rules apply to the Participant's own members. The Processor will reject any quotation information or transaction reports received from any Participant on an Eligible Security that has a Regulatory Halt in effect.

B. Whenever the Primary Market determines that an adequate publication or dissemination of information has occurred so as to permit the termination of the Regulatory Halt then in effect, the Primary Market shall promptly notify the Processor and each of the other Participants that conducts trading in such security. Except in extraordinary circumstances, adequate publication or dissemination shall be presumed by the Primary Market to have occurred upon the expiration of one hour after initial publication in a national news dissemination service of the information that gave rise to the Regulatory Halt.

C. Except in the case of a Regulatory Halt, the Processor shall not cease the dissemination of quotation or transaction information regarding any Eligible Security. In particular, it shall not cease dissemination of such information because of a delayed opening, imbalance of orders or other market-related problems involving such security.

D. For purposes of this Section X, ''Primary Market'' for an Eligible Security means Nasdaq; provided, however, that if for any 12-month period the number of reported transactions and the reported share volume in an Eligible Security in any other Participant's Market exceeds 50% of the aggregate reported transactions and reported share volume of all Participants in such security, then that Participant's Market shall be the Primary Market for such Eligible Security.

XI. Hours of Operation

A. Quotation Information may be entered by Participants as to all Eligible Securities in which they make a market between 9:30 a.m. and 4:00 p.m. Eastern Time (''ET'') on all days the Processor is in operation. Transaction Reports shall be entered between 9:30 a.m. and 4:01:30 p.m. ET by Participants as to all Eligible Securities in which they execute transactions between 9:30 a.m. and 4 p.m. ET on all days the Processor is in operation.

B. Participants that execute transactions in Eligible Securities outside the hours of 9:30 a.m. ET and 4:00 p.m., ET, shall be reported as follows:

(i) transactions in Eligible Securities executed between 8 a.m. and 9:29:59 a.m. ET and between 4:01:30 and 6:30 p.m. ET, shall be designated as ''.T'' trades to denote their execution outside normal market hours;

(ii) transactions in Eligible Securities executed after 6:30 p.m. and before 12 a.m. (midnight) shall be reported to the Processor as ''.T'' trades between the hours of 8 a.m. and 6:30 p.m. ET on the next business day on an ''as/of'' basis;

(iii) transactions in Eligible Securities executed between 12:00 a.m. (midnight) and 8 a.m. ET shall be transmitted to the Processor between 8 a.m. and 9:30 a.m. ET, on trade date, shall be designated as ''.T'' trades to denote their execution outside normal market hours, and shall be accompanied by the time of execution;

(iv) transactions reported pursuant to this provision of the Plan shall be included in the calculation of total trade volume for purposes of determining net distributable operating revenue, but shall not be included in the calculation of the daily high, low, or last sale.

C. Late trades shall be reported in accordance with the rules of the Participant in whose Market the transaction occurred.

D. The Processor shall collect, process and disseminate Quotation Information in Eligible Securities at other times between 8 a.m. and 9:30 a.m. ET, and after 4 p.m. ET, when any Participant or Nasdaq market participant is open for trading, until 6:30 p.m. ET (the ''Additional Period''); provided, however, that the best bid and offer quotation will not be disseminated before 9:30 a.m. or after 6:30 p.m. ET. Participants that enter Quotation Information or Transaction Reports to the Processor during the Additional Period shall do so for all Eligible Securities in which they enter quotations.

E. The NASD shall have the right to modify its hours of operation upon notification to

other Participants and approval by the SEC, in which event the hours of operation of the Processor shall be changed to conform to the hours of operation of the NASD.

XII. Undertaking by All Participants

The filing with and approval by the Commission of this Plan shall obligate each Participant to enforce compliance by its members with the provisions thereof. In all other respects not inconsistent herewith, the rules of each Participant shall apply to the actions of its members in effecting, reporting, honoring and settling transactions executed through its facilities, and the entry, maintenance and firmness of quotations to ensure that such occurs in a manner consistent with just and equitable principles of trade.

XIII. Undertaking by NASD

The NASD shall maintain a database of consolidated quotation, last sale and clearing data in Eligible Securities as part of its normal surveillance function with respect to the Nasdaq Market. Such information as is maintained and appropriate for the foregoing purposes will be made available to Participants upon request for investigatory and surveillance purposes. It is anticipated that a formalized procedure will be developed for the monitoring of information and sharing of surveillance information analogous to those procedures applicable to the Intermarket Surveillance Group for listed securities. Pending such agreement, the Participants shall cooperate to the fullest extent possible to facilitate joint utilization of available information for market surveillance and regulatory purposes.

The NASD shall also make available to the Participants, upon request, nonproprietary information pertaining to Eligible Securities on a cost basis.

XIV. Financial Matters

A. Development Costs

Any Participant becoming a signatory to this Plan after June 26, 1990, shall, as a condition to becoming a Participant, pay to the other Plan Participants a proportionate share of the aggregate development costs previously paid by Plan Participants to the Processor, which aggregate development costs totaled $439,530, with the result that each Participant's share of all development costs is the same.

Each Participant shall bear the cost of implementation of any technical enhancements to the Nasdaq system made at its request and solely for its use, subject to reapportionment should any other Participant subsequently make use of the enhancement, or the development thereof.

B. Cost Allocation and Revenue Sharing

The provisions governing cost allocation and revenue sharing among the Participants are set forth in Exhibit 1 to the Plan.

C. Maintenance of Financial Records

The Processor shall maintain records of revenues generated and development and operating expenditures incurred in connection with the Plan. In addition, the Processor shall provide the Participants with: (a) A statement of financial and operational condition on a quarterly basis; and (b) an audited statement of financial and operational condition on an annual basis.

XV. Indemnification

Each Participant agrees, severally and not jointly, to indemnify and hold harmless each other Participant, Nasdaq, and each of its directors, officers, employees and agents (including the Operating Committee and its employees and agents) from and against any and all loss, liability, claim, damage and expense whatsoever incurred or threatened against such persons as a result of any Transaction Reports, Quotation Information or other information reported to the Processor by such Participant and disseminated by the Processor to Vendors. This indemnity agreement shall be in addition to any liability that the indemnifying Participant may otherwise have.

Promptly after receipt by an indemnified Participant of notice of the commencement of any action, such indemnified Participant will, if a claim in respect thereof is to be made against an indemnifying Participant, notify the indemnifying Participant in writing of the commencement thereof; but the omission to so notify the indemnifying Participant will not relieve the indemnifying Participant from any liability which it may have to any indemnified Participant. In case any such action is brought against any indemnified Participant and it promptly notifies an indemnifying Participant of the commencement thereof, the indemnifying Participant will be entitled to participate in, and, to the extent that it may wish, jointly with any other indemnifying Participant similarly notified, to assume and control the defense thereof with counsel chosen by it. After notice from the indemnifying Participant of its election to assume the defense thereof, the indemnifying Participant will not be liable to such indemnified Participant for any legal or other expenses subsequently incurred by such indemnified Participant in connection with the defense thereof but the indemnified Participant may, at its own expense, participate in such defense by counsel chosen by it without, however, impairing the indemnifying Participant's control of the defense. The indemnifying Participant may negotiate a compromise or settlement of any such action, provided that such compromise or settlement does not require a contribution by the indemnified Participant.

XVI. Withdrawal

Any Participant may withdraw from the Plan at any time on not less than 30 days prior written notice to each of the other Participants. Any Participant withdrawing from the Plan shall remain liable for, and shall pay upon demand, any fees for equipment or services being provided to such Participant pursuant to the contract executed by it or an agreement or schedule of fees covering such then in effect.

A withdrawing Participant shall also remain liable for its proportionate share, without any right of recovery, of administrative and operating expenses, including start-up costs and other sums for which it may be responsible pursuant to Section XIV hereof. Except as aforesaid, a withdrawing Participant shall have no further obligation under the Plan or to any of the other Participants with respect to the period following the effectiveness of its withdrawal.

XVII. Modifications to Plan

The Plan may be modified from time to time when authorized by the agreement of all of the Participants, subject to the approval of the SEC.

XVIII. Applicability of Securities Exchange Act of 1934

The rights and obligations of the Participants and of Vendors, News Services, Subscribers and other persons contracting with the NASD or its subsidiaries (including Nasdaq) in respect of the matters covered by the Plan shall at all times be subject to any applicable provisions of the Act, as amended, and any rules and regulations promulgated thereunder.

XIX. Operational Issues

A. Each Exchange Participant shall be responsible for collecting and validating quotes and last sale reports within their own system prior to transmitting this data to the Processor.

B. Each Exchange Participant may utilize a dedicated Participant line into the Processor to transmit trade and quote information in Eligible Securities to the Processor. The Processor shall accept from Exchange Participants input for only those issues that are deemed Eligible Securities.

C. The Processor shall consolidate trade and quote information from each Participant and disseminate this information on the Nasdaq existing vendor lines.

D. The Processor shall perform gross validation processing for quotes and last sale messages in addition to the collection and dissemination functions, as follows:

1. Basic Message Validation

(a) The Processor may validate format for each type of message, and reject non-conforming messages.

(b) Input must be for an Eligible Security.

2. Logging Function—The Processor shall return all Participant input messages that do not pass the validation checks (described above) to the inputting Participant, on the entering Participant line, with an appropriate reject notation. For all accepted Participant input messages (*i.e.,* those that pass the validation check), the information shall be retained in the Processor system.

3. Price Checks—Once the quotes and trades are accepted and disseminated by the Processor, the Processor shall perform gross price checks to ensure that:

(a) Participant quotes are within the established range of the current market; and

(b) Participant last sale reports are within the established range of the current market.

XX. Headings

The section and other headings contained in this Plan are for reference purposes only and shall not be deemed to be a part of this Plan or to affect the meaning or interpretation of any provisions of this Plan.

XXI. Counterparts

This Plan may be executed by the Participants in any number of counterparts, no one of which need contain the signature of all Participants. As many such counterparts as shall together contain all such signatures shall constitute one and the same instrument.

In Witness Whereof, this Plan has been executed as of the __ day of __, 200__, by each of the Signatories hereto.

AMERICAN STOCK EXCHANGE, INC.
BY: _____
BOSTON STOCK EXCHANGE, INC.
BY: _____
CINCINNATI STOCK EXCHANGE, INC.
BY: _____
PACIFIC EXCHANGE, INC.
BY: _____
CHICAGO STOCK EXCHANGE, INC.
BY: _____
NATIONAL ASSOCIATION OF SECURITIES DEALERS, INC.
BY: _____
PHILADELPHIA STOCK EXCHANGE, INC.
BY: _____

Exhibit 1

1. Each Participant eligible to receive revenue under the Plan will receive an annual payment for each calendar year to be determined by multiplying (i) that Participant's percentage of total volume in Nasdaq securities reported to the Processor and disseminated to Vendors for that calendar year by (ii) the total distributable net operating income (as defined below) for that calendar year provided, however, that for the implementation year (as defined in Paragraph 4 below), a Participant's payment shall be multiplied by the number of months during the implementation year the interface was in operation divided by twelve. In the event that total distributable net operating income is negative, each Participant eligible to receive revenue under the Plan will receive an annual bill for each calendar year to be determined according to the same formula (described in this paragraph) for determining annual payments to eligible Participants.

2. A Participant's percentage of total volume in Nasdaq securities will be calculated by taking the average of (i) the Participant's percentage of total trades in Nasdaq securities reported to the Processor and disseminated to Vendors for the year and (ii) the Participant's percentage of total share volume in Nasdaq securities reported to the Processor and disseminated to Vendors for the year (trade/volume average). For any given year, a Participant's percentage of total trades shall be calculated by dividing the total number of trades that that Participant reports to the Processor as the selling party for that year by the total number of trades in Nasdaq securities reported to the Processor and disseminated to Vendors for the year. A Participant's total share volume shall be calculated by multiplying the total number of trades in Nasdaq securities in that year that that Participant reports to the Processor as the selling party multiplied by the number of shares for each such trade. Unless otherwise stated in this agreement, a year shall run from January 1 to December 31.

3. For purposes of this Exhibit 1, net distributable operating income for any particular calendar year shall be calculated by adding all revenues from Level 1, Level 2 (non-market maker revenues only), Nasdaq Last Sale Information Service, and NQDS, including revenues from the dissemination of information among Eligible Securities to foreign marketplaces (collectively, ''the Data Feeds''), and subtracting from such revenues the costs incurred by the Processor, set forth below, in collecting, consolidating, validating, and disseminating the Data Feeds. These costs include, but are not limited to, the following:

a. The Processor costs directly attributable to creating NQDS, including:

1. proportional cost of collecting Participant quotes into the Processor's quote engine;

2. cost of processing quotes and creating NQDS messages within the Processor's quote engine;

3. cost of the Processor's communication management subsystem that distributes NQDS to the market data vendor network for further distribution.

b. The costs directly attributable to creating the Level 1 Data Feed, including:

1. cost of calculating the national best bid and offer price within the Processor's quote engine;

2. cost of creating the Level 1 Data Feed message within the Processor's quote engine;

3. cost of the Processor's communication management subsystem that distributes the Level 1 Data Feed to the market data vendors' networks for further distribution.

c. The costs directly attributable to creating the Nasdaq Last Sale Information Service Data Feed, including:

1. cost of determining the appropriate last sale price and volume amount within the Processor's trade engine;

2. cost of utilizing the Processor's trade engine to distribute the Nasdaq Last Sale Information Service for distribution to the market data vendors.

d. The additional costs that are shared across all Data Feeds, including:

1. Telecommunication Operations costs of supporting the Participant lines into the Processor's facilities;

2. Telecommunications Operations costs of supporting the external market data vendor network;

3. Data Products account management and auditing function with the market data vendors;

4. Market Operations costs to support symbol maintenance, and other data integrity issues;

5. costs associated with surveillance activities to validate data on a real-time basis and to ensure a high level of integrity of Data Feeds, provided however that costs associated with monitoring for trade halts in Eligible Securities shall not be included herein;

6. overhead costs, including management support of the Processor, Human Resources, Finance, Legal, and Administrative Services.

e. Processor costs excluded from the calculation of net distributable operating income include trade execution costs for transactions executed using a Nasdaq service and trade report collection costs reported through a Nasdaq service, as such services are market functions for which Participants electing to use such services pay market rate.

f. For the purposes of this provision, the following definitions shall apply:

1. ''quote engine'' shall mean the Nasdaq's UNISYS system that is operated by Nasdaq to collect quotation information for Eligible Securities;

2. ''trade engine'' shall mean the Nasdaq Tandem system that is operated by Nasdaq for the purpose of collecting last sale information in Eligible Securities.

4. At the time a Participant implements a computer-to-computer-interface or other Processor-approved electronic interface with the Processor, the Participant will become eligible to receive revenue for the year in which the interface is implemented (implementation year).

5. From the date a Participant is eligible to receive revenue (implementation date) until December 31 of the implementation year, Nasdaq shall pay the Participant a pro rata amount of its payment or bill the Participant for a pro rata amount of its losses for the implementation year (as calculated in Paragraph 1 above). This calculation and resultant payment (or bill) will be made (or due) within ninety (90) days after the twelfth month following the implementation date.

For the calendar year subsequent to the implementation year, and continuing thereafter, the calculation of the Participant's annual payment or loss will be performed and the payment made or bill delivered by March 31 of the following year. Estimated quarterly payments or billings shall be made to each eligible Participant within 45 days following the end of each calendar quarter in which the Participant is eligible to receive revenue, provided that the total of such estimated payments or billings shall be reconciled at the end of each calendar year and, if necessary, adjusted by March 31st of the following year. Interest shall be included in quarterly payments and in adjusted payments made on March 31st of the following year. Such interest shall accrue monthly during the period in which revenue was earned and not yet paid and will be based on the 90-day Treasury bill rate in effect at the end of the quarter in which the payment is made. Interest shall not accrue during the period of up to 45 days between the end of each calendar quarter and the date on which an estimated quarterly payment or billing is made.

In conjunction with calculating estimated quarterly and reconciled annual payments under this Exhibit 1, the Processor shall submit to the Participants an itemized statement setting forth the basis upon which net operating income was calculated, including an itemized statement of the Processor costs set forth in Paragraph 3 of this Exhibit. Such Processor costs shall be reconciled annually based solely on the Processor's audited annual financial information. By majority vote of the Operating Committee, the Processor shall engage an independent auditor to audit the Processor's costs or other calculation(s), the cost of which audit shall be shared equally by all Participants. The Processor agrees to

cooperate fully in providing the information necessary to complete such audit.

[FR Doc. 01–24576 Filed 10–1–01; 8:45 am]

BILLING CODE 8010–01–P

SECURITIES AND EXCHANGE COMMISSION

[Release No. 34–44843; File No. SR–DTC–2001–06]

Self-Regulatory Organizations; The Depository Trust Company; Notice of Filing and Immediate Effectiveness of a Proposed Rule Change Revising the Fee Schedule for Services of The Depository Trust Company

September 25, 2001.

Pursuant to Section 19(b)(1) of the Securities Exchange Act of 1934 (''Act''),[1] notice is hereby given that on April 25, 2001, The Depository Trust Company (''DTC'') filed with the Securities and Exchange Commission (''Commission'') the proposed rule change as described in Items I, II, and III below, which items have been prepared primarily by DTC. The Commission is publishing this notice to solicit comments on the proposed rule change from interested persons.

I. Self-Regulatory Organization's Statement of the Terms of Substance of the Proposed Rule Change

DTC is filing a revised fee schedule for DTC services associated with the processing of registered securities.

II. Self-Regulatory Organization's Statement of the Purpose of, and Statutory Basis for, the Proposed Rule Change

In its filing with the Commission, DTC included statements concerning the purpose of and basis for the proposed rule change and discussed any comments it received on the proposed rule change. The text of these statements may be examined at the places specified in Item IV below. DTC has prepared summaries, set forth in sections (A), (B), and (C) below, of the most significant aspects of such statements.[2]

(A) Self-Regulatory Organization's Statement of the Purpose of, and Statutory Basis for, the Proposed Rule Change

The purpose of the proposed rule change is to adjust the fees DTC charges for various services and to initiate several new fees for existing services so that DTC's fees may be aligned with the respective estimated service costs for 2001. The revised fees and new fees will be effective with respect to services provided on and after May 1, 2001.

The revised 2001 fee schedule includes five new fees for existing services, which are being employed to recover processing costs with regard to reorganizations and underwritings. The revised and new fees are set forth in Exhibit 1 to the proposed rule change.

DTC believes that the proposed rule change is consistent with the requirements of the Act and the rules and regulations thereunder applicable to DTC because fees will be allocated more equitably among DTC participants based on respective estimated 2001 unit service costs.

(B) Self-Regulatory Organization's Statement on Burden on Competition

DTC does not believe that the proposed rule change will impose any burden on competition that is not necessary or appropriate in furtherance of the purposes of the Act.

(C) Self-Regulatory Organization's Statement on Comments on the Proposed Rule Change Received From Members, Participants, or Others

No written comments from participants or others have been solicited or received in respect of this proposed rule change.

III. Date of Effectiveness of the Proposed Rule Change and Timing for Commission Action

DTC has designated the proposed rule change as a fee change in accordance with Section 19(b)(3)(A)(ii) of the Act[3] and Rule 19b–4(f)(2)[4] thereunder. Accordingly, the proposal will take effect upon filing with the Commission. At any time within sixty days of the filing of the proposed rule change, the Commission may summarily abrogate such rule change if it appears to the Commission that such action is necessary or appropriate in the public interest, for the protection of investors, or otherwise in furtherance of the purposes of the Act.

IV. Solicitation of Comments

Interested persons are invited to submit written data, views, and arguments concerning the foregoing, including whether the proposed rule change is consistent with the Act. Persons making written submissions should file six copies thereof with the Secretary, Securities and Exchange Commission, 450 Fifth Street NW, Washington, DC 20549–0609. Copies of the submission, all subsequent amendments, all written statements with respect to the proposed rule change that are filed with the Commission, and all written communications relating to the proposed rule change between the Commission and any person, other than those that may be withheld from the public in accordance with the provisions of 5 U.S.C. 552, will be available for inspection and copying in the Commission's Public Reference Section, 450 Fifth Street NW, Washington, DC 20549. Copies of such filings will also be available for inspection and copying at the principal office of DTC. All submissions should refer to the File No. SR–DTC–2001–06 and should be submitted by October 23, 2001.

For the Commission by the Division of Market Regulation, pursuant to delegated authority.[5]

Margaret H. McFarland,

Deputy Secretary.

[FR Doc. 01–24578 Filed 10–1–01; 8:45 am]

BILLING CODE 8010–01–M

[1] 15 U.S.C. 78s(b)(1).

[2] The Commission has modified parts of these statements.

[3] 15 U.S.C. 78s(b)(3)(A)(ii).

[4] 17 CFR 240.19b–4(f)(2).

[5] 17 CFR 200.30–3(a)(12).

SECURITIES AND EXCHANGE COMMISSION

[Release No. 34–44847; File No. SR–PCX–2001–05]

Self-Regulatory Organizations; Notice of Filing and Order Granting Accelerated Approval of Proposed Rule Change and Amendments No. 1 and No. 2 Thereto by the Pacific Exchange, Inc. Relating to Its Auto-Ex Incentive Program for Market Makers

September 25, 2001.

Pursuant to Section 19(b)(1) of the Securities Exchange Act of 1934 (''Act''),[1] and Rule 19b–4 thereunder,[2] notice is hereby given that on January 11, 2001, the Pacific Exchange, Inc. (''PCX'' or ''Exchange'') filed with the Securities and Exchange Commission (''SEC'' or ''Commission'') the proposed rule change as described in Items I and II below, which Items have been prepared by the Exchange. On March 20, 2001, the PCX submitted Amendment No. 1 to the proposed rule change.[3] On May 17, 2001, the PCX

[1] 15 U.S.C. 78s(b)(1).

[2] 17 CFR 240.19b–4.

[3] *See* letter from Cindy Sink, Senior Attorney, Regulatory Policy, PCX, to Nancy Sanow, Assistant Director, Division of Market Regulation, Commission, dated March 19, 2001. In Amendment No. 1, the PCX deleted from its proposed rule text the provision permitting guaranteed participation

Continued

submitted Amendment No. 2 to the proposed rule change.[4] The Commission is publishing this notice to solicit comments on the proposed rule change from interested persons.

I. Self-Regulatory Organization's Statement of the Terms of Substance of the Proposed Rule Change

The PCX proposed to provide assignment of Auto-Ex orders to logged-on Market Makers according to the percentage of their in-person agency contracts by adopting a new Auto-Ex Incentive Program. Proposed new language is in italics; proposed deletions are in brackets.

* * * * *

Rule 6.87(a)–(j)—No change.

6.87(k) Allocation of Auto-Ex Trades to Individual Market Makers. The OFTC will determine the manner in which orders entered through the Auto-Ex system will be assigned to individual Market Makers for execution, on an issue-by-issue basis, [subject to the following restrictions:] *as follows:*

[(1) Each Market Maker who is participating on the Auto-Ex system will be to execute a maximum of ten option contracts per Auto-Ex trade, except that:

(A) The OFTC may permit individual Market Makers and Lead Market Makers (''LMMs'') to be allocated a number of contracts greater then ten and no more than fifty, but may do so only upon the request of the individual Market Maker or LMM.

(B) In accordance with the provision on LMMs' guaranteed participation in Rule 6.82(d)(2), the LMM in an issue will be required either (i) to participate in every other trade executed on Auto-Ex in that issue or (ii) to participate in a percentage of every trade consistent with the amount of the LMM's amount of guaranteed participation.

(C) The OFTC may require Market Makers or an LMM who is participating on Auto-Ex in a particular option issue to execute a number of contracts greater than ten, but before doing so, the OFTC must take into account whether doing so would place a Market Maker at undue risk based on that Market Maker's capitalization.

(2) The OFTC will ordinarily seek to assure that each Market Maker participating on Auto-Ex in a particular option issue will be assigned up to the same maximum number of option contracts per Auto-Ex trade. The OFTC may permit exceptions to this procedure only in unusual situations where the OFTC finds good cause for permitting differences in the maximum number of contracts executed by individual Market Makers.]

Auto-Ex Incentive Program

(1) Auto-Ex orders are assigned to Market Makers who are logged-on Auto-Ex according to the percentage of their in-person agency contracts traded in that issue (excluding Auto-Ex contracts traded) compared to all of the Market Maker in-person agency contracts traded (excluding Auto-Ex contracts) during the review period. The review period will be determined by the Options Floor Trading Committee (''OFTC'') and may be for any period of time not in excess of two weeks. The percentage distribution determined for a review period will be effective for the succeeding review period.

(A) Participation Percentage Calculation. Each Auto-Ex order in an issue will be allocated to Market Makers on Auto-Ex on a rotating basis. On each rotation (subject to the exceptions described below) each participating Market Maker logged onto Auto-Ex will be assigned the number of Auto-Ex contracts that reflects the percentage of agency contracts that the Market Maker traded in-person in that issue during the review period. A participation percentage will be calculated for each Market Maker for each issue that the Market Maker trades. For this purpose, all transactions on behalf of the same LMM will be aggregated into a single percentage for the LMM.

(B) Assignment of Contracts. Once a Market Maker has logged onto Auto-Ex, the Market Maker will be assigned contracts during the Auto-Ex rotation until that Market Maker's participation percentage has been met. This may mean that multiple orders (or an order and a part of the succeeding order) will be assigned to the same Market Maker during the rotation.

(C) Joint Accounts. A joint account participant may substitute on the Auto-Ex wheel for another participant who is registered to trade the same joint account and may receive the same participation percentage that has been established for the participant for which the replacement is substituting, provided that the following conditions are met:

(i) *The substitute must notify the OBO of the substitution;*

(ii) *The substitute must log on to the same option issues that the original trader was logged-on to; and*

(iii) *The agency trades of the substitute will count toward the calculation of the participation percentage of the original participant for the subsequent review period.*

(D) Minimum Participation. The Exchange will determine the number of contracts that make up one percent of the rotation. Market Makers logged onto Auto-Ex in an issue, regardless of their participation percentage, will be entitled to at least one percentage of the rotation on every rotation.

(E) Rotation. Generally, one rotation consists of the number of contracts replicating the cumulative percentage of all Market Makers logged onto Auto-Ex who have a participation percentage plus one percentage for each Market Maker that does not have a specific participation percentage.

(F) Maximum assignment. The maximum number of contracts that a Market Maker may be consecutively assigned at any one time during a rotation will be variable and may be different for different issues or the same for all issues. Because the maximum number of contracts permitted may be smaller than the number of contracts to which a particular Market Maker is entitled during one rotation, that Market Maker will receive more than one turn during one rotation.

* * * * *

II. Self-Regulatory Organization's Statement of the Purpose of, and Statutory Basis for, the Proposed Rule Change

In its filing with the Commission, the Exchange included statements concerning the purpose of and basis for the proposed rule change and discussed any comments it received on the proposed rule change. The text of these statements may be examined at the places specified in Item III below. The Exchange has prepared summaries, set forth in Sections A, B, and C below, of the most significant aspects of such statements.

A. Self-Regulatory Organization's Statement of the Purpose of, and Statutory Basis for, the Proposed Rule Change

1. Purpose

The Exchange proposes a rule change that will allow the Exchange to assign Auto-Ex orders to Market Makers logged-on to Auto-Ex according to their percentage of in-person agency

by Lead Market Makers (''LMMs''). In addition, in Amendment No. 1, PCX renumbered certain sections of its proposed rule text. Finally, PCX corrected certain typographical errors contained in its original filing.

[4] *See* letter from Cindy Sink, Senior Attorney, Regulatory Policy, PCX, to Nancy Sanow, Assistant Director, Division of Market Regulation, Commission, dated May 16, 2001. In Amendment No. 2, the PCX made a technical change to its filing. Specifically, the PCX redesignated paragraph (1) of Rule 6.87, as set forth in Amendment No. 1, as paragraph (k).

contracts[5] traded in an issue during the review period.[6] The Exchange proposes to delete the current method of assigning Auto-Ex contracts, which consists of assigning a minimum of ten contracts and a maximum of one hundred[7] contracts to each participating Market Maker per Auto-Ex trade, and adopt a new Auto-Ex Incentive Program. Currently the LMM receives its guaranteed participation percentage under Rule 6.82(d)(2) and the remaining contracts are allocated according to a rotation system to the remaining Market Makers in the crowd. The proposed Auto-Ex Incentive Program will replace the current system of Auto-Ex contract assignment in its entirety and will be implemented on a floor-wide basis.[8]

The proposed rule provides for Auto-Ex orders to be assigned to Market Makers who are logged-on to Auto-Ex according to the percentage of their in-person agency contracts traded in that issue (excluding Auto-Ex contracts traded) compared to all of the Market Maker in-person agency contracts traded (excluding Auto-Ex contracts) during the review period. The review period will be determined by the Options Floor Trading Committee (''OFTC'') and may be for any period of time not in excess of two weeks.[9] The percentage distribution determined for a review period will be effective for the succeeding review period.

The proposed rule provides the following:

(A) *Participation Percentage Calculation.*

Each Auto-Ex order in an issue will be allocated to Market Makers on Auto-Ex on a rotating basis. On each rotation (subject to the exceptions described below) each participating Market Maker logged-on to Auto-Ex will be assigned the number of Auto-Ex contracts that reflects the percentage of agency contracts that the Market Maker traded in-person in that issue during the review period. A participation percentage will be calculated for each Market Maker for each issue that the Market Maker trades. For this purpose, all transactions on behalf of the same LMM will be aggregated into a single percentage for the LMM.

(B) *Assignment of Contracts.*

Once a Market Maker has logged-on to Auto-Ex, the Market Maker will be assigned contracts during the Auto-Ex rotation until that Market Maker's participation percentage has been met. This may mean that multiple orders (or an order and a part of the succeeding order) will be assigned to the same Market Maker during the rotation.

(C) *Joint Accounts.*

A joint account participant may substitute on the Auto-Ex wheel for another participant who is registered to trade the same joint account and may receive the same participation percentage that has been established for the participant for which the replacement is substituting, provided that the following conditions are met:

(i) the substitute must notify the Order Book Official of the substitution;

(ii) the substitute must log-on to Auto-Ex for the same option issues for which the original trader was logged-on; and

(iii) the agency trades of the substitute will count toward the calculation of the participation percentage of the original participant for the subsequent review period.

(D) *Minimum Participation.*

The Exchange will determine the number of contracts that make up one percent of the rotation. Market Makers logged onto Auto-Ex in an issue, regardless of their participation percentage, will be entitled to at least one percent of the rotation on every rotation.

(E) *Rotation.*

Generally, one rotation consists of the number of contracts replicating the cumulative percentage of all Market Makers logged onto Auto-Ex who have a participation percentage plus one percentage for each Market Maker that does not have a specific participation percentage.

(F) *Maximum assignment.*

The maximum number of contracts that a Market Maker may be consecutively assigned at any one time during a rotation will be variable and may be different for different issues or the same for all issues. Because the maximum number of contracts permitted may be smaller than the number of contracts to which a particular Market Maker is entitled during one rotation, that Market Maker will receive more than one turn during one rotation.

2. Statutory Basis

The Exchange believes that the proposed rule change is consistent with Section 6(b)[10] of the Act, in general, and furthers the objectives of Section 6(b)(5),[11] in particular, in that it is designed to facilitate transactions in securities, to promote just and equitable principles of trade, to enhance competition and to protect investors and the public interest.

B. Self-Regulatory Organization's Statement on Burden on Competition

The Exchange does not believe that the proposed rule change will impose any inappropriate burden on competition.

C. Self-Regulatory Organization's Statement on Comments on the Proposed Rule Change Received From Members, Participants or Others

Written comments were neither solicited nor received.

III. Solicitation of Comments

Interested persons are invited to submit written data, views, and arguments concerning the foregoing, including whether the proposed rule change is consistent with the Act. Persons making written submissions should file six copies thereof with the Secretary, Securities and Exchange Commission, 450 Fifth Street, NW, Washington, DC 20549–0609. Copies of the submission, all subsequent

[5] Agency contracts are those contracts that are represented by an agent and do not include contracts traded between market makers in-person in the trading crowd.

[6] The proposed rule changes were based in part on Chicago Board Options Exchange, Inc. (''CBOE'') Rule 6.8 *Interpretations and Policies* .06(c) ''100 Spoke RAES Wheel.'' In addition, the Exchange notes that the Commission has directed that the options markets adopt new, or amend existing, rules concerning its automated quotation and execution systems which substantially enhance incentives to quote competitively and reduce disincentives for market participants for market participants to act competitively. *See* Section IV.B.h.(i), *Order Instituting Public Administrative Proceedings Pursuant to Section 19(h)(1) of the Securities Exchange Act of 1934, Making Findings and Imposing Remedial Sanctions*, Securities Exchange Act Release No. 43268 (September 11, 2000) and Administrative Proceeding File 3–10282 (the ''Order''). Telephone conversation between Cindy Sink, Senior Attorney, Regulatory Policy, PCX and Gordon Fuller, Counsel to the Assistant Director, Division of Market Regulation, Commission (September 24, 2001).

[7] The maximum order size for execution through Auto-Ex is now one hundred contracts pursuant to Rule 6.87(b)(1). *See* Securities Exchange Act Release No. 43887 (January 25, 2001), 66 FR 8831 (February 2, 2001). The PCX has confirmed that some of the options traded on its floor currently are subject to the one hundred contract maximum order size. Telephone conversation between Cindy Sink, Senior Attorney, Regulatory Policy, PCX and Geoffrey Pemble, Attorney, Division of Market Regulation, Commission (September 25, 2001).

[8] Telephone conversation among Cindy Sink, Senior Attorney, Regulatory Policy, PCX, Gordon Fuller, Counsel to the Assistant Director, Division of Market Regulation, Commission, and Geoffrey Pemble, Attorney, Division of Market Regulation, Commission (September 7, 2001).

[9] The Exchange represents that the review period will be set at two weeks for all options classes and that the Options Floor Trading Committee (''OFTC'') will not vary the term of the review period except in the case of exigent circumstances. Telephone conversation between Cindy Sink, Senior Attorney, Regulatory Policy, PCX and Gordon Fuller, Counsel to the Assistant Director, Division of Market Regulation, Commission (September 24, 2001).

[10] 15 U.S.C. 78f(b).

[11] 15 U.S.C. 78f(b)(5).

amendments, all written statements with respect to the proposed rule change that are filed with the Commission, and all written communications relating to the proposed rule change between the Commission and any person, other than those that may be withheld from the public in accordance with the provisions of 5 U.S.C. 552, will be available for inspection and copying at the Commission's Pubic Reference Room. Copies of such filing will also be available for inspection and copying at the principal office of the Exchange. All submissions should refer to File No. SR–PCX–2001–05 and should be submitted by October 23, 2001.

IV. Commission's Findings and Order Granting Accelerated Approval of Proposed Rule Change

After careful review, the Commission finds that implementation of the proposed rule change on a pilot basis is consistent with the requirements of Section 6 of the Act [12] and the rules and regulations thereunder applicable to a national securities exchange.[13] Specifically, the Commission believes that the proposal is consistent with Sections 6(b)(5) and 6(b)(8) of the Act.[14] Section 6(b)(5) requires, among other things, that the rules of an exchange be designed to prevent fraudulent and manipulative acts and practices, to promote just and equitable principles of trade, to facilitate transactions in securities, to remove impediments to and perfect the mechanisms of a free and open market and a national market system, and, in general, to protect investors and the public interest.[15] Section 6(b)(5) also requires that those rules not be designed to permit unfair discrimination between customers, issuers, brokers, or dealers. Section 6(b)(8) of the Act requires that the rules of an exchange not impose any burden on competition not necessary or appropriate in furtherance of the purposes of the Act.

The proposed rule would provide for the assignment of Auto-Ex orders to Market Makers who are logged-on Auto-Ex according to the percentage of their in-person agency contracts traded in that issue (excluding Auto-Ex contracts traded) compared to all of the Market Maker in-person agency contracts traded (excluding Auto-Ex contracts) during the review period. Although the PCX's proposal does not reward a Market Maker for improving the Exchange's displayed quotation, it does reward a Market Maker for providing liquidity to orders in the trading crowd by linking the Market Maker's percentage of Auto-Ex contracts to the percentage of agency contracts it executed in the trading crowd. The Commission finds that it is consistent with the purposes of Section 6(b)(5) of the Act for PCX to revise its Auto-Ex contract assignment method in this way. The Commission believes that, because the PCX's proposed Auto-Ex incentive system for Market Makers will more closely allocate the percentage of contracts that a particular Market Maker can receive on a single revolution of the wheel to the percentage of in-person agency contracts traded on the floor by that Market Maker, Market Makers will have a greater incentive to compete effectively for orders in the crowd. This result, in turn, should benefit investors and promote the public interest.

The Commission further finds that the proposed Auto-Ex Incentive Program, in general, does not impose any unnecessary burden on competition, consistent with Section 6(b)(8) [16] of the Act. In fact, the proposed rule change should help foster competition because Auto-Ex allocations to Market Makers will be based on the number of in-person agency contracts that they execute on the floor, rather than on the same number of Auto-Ex contracts being allocated to each logged-on Market Maker during each wheel rotation. In addition, the Commission finds that the maximum assignment provision set forth in the proposed rule change, which limits the number of contracts each Market Maker can be assigned consecutively at any one time during a rotation, does not impose any unnecessary burden on competition, consistent with Section 6(b)(8) [17] of the Act. This maximum assignment provision will not affect the number of contracts that each Market Maker is entitled to receive during each revolution of the Auto-Ex wheel, but only the timing of the allocation of contracts to each Market Maker. This provision ensures that each Market Maker logged-on to Auto-Ex will receive at least some contracts before Market Makers with a greater participation percentage are assigned all of their contracts in a given revolution. This provision also reduces the exposure of Market Makers to market risk by breaking up the distribution of contracts into smaller groupings.

The Commission is approving this proposal on a nine-month pilot basis, through June 25, 2002. As indicated above, the Commission anticipates that the proposed Auto-Ex Incentive Program for Market Makers will encourage Market Makers to compete effectively for order flow in the trading crowds, thus benefiting investors and promoting the public interest. The Commission, however, intends to review the Exchange's experience with its new allocation system during the course of the pilot program.

The Exchange has requested that the Commission approve this proposed rule change on an accelerated basis. The Commission notes that PCX's proposal is virtually identical to a proposed rule change by CBOE (SR–CBOE–99–40) that was approved on a nine-month pilot basis by the Commission,[18] and was extended by the Commission for an additional six months and four months, respectively, in two subsequent orders.[19] Thus, the proposed rule change concerns issues that previously have been the subject of a full comment period pursuant to Section 19(b) of the Act.[20] Accordingly, the Commission finds good cause for approving the proposed rule change (SR–PCX–2001–05) prior to the thirtieth day after the date of publication of notice thereof in the **Federal Register**.

It is therefore ordered, pursuant to Section 19(b)(2) of the Act,[21] that the proposed rule change (SR–PCX–2001–05) is hereby approved on an accelerated basis, as a pilot program through June 25, 2002.

For the Commission, by the Division of Market Regulation, pursuant to delegated authority.[22]

Margaret H. McFarland,

Deputy Secretary.

[FR Doc. 01–24577 Filed 10–1–01; 8:45 am]

BILLING CODE 8010–01–M

[12] 15 U.S.C. 78f.

[13] 15 U.S.C. 78f(b)(5).

[14] 15 U.S.C. 78f(b)(5) and (b)(8).

[15] In approving this rule, the Commission notes that it has considered the proposed rule's impact on efficiency, competition, and capital formation. *See* 15 U.S.C. 78c(f).

[16] 15 U.S.C. 78f(b)(8).

[17] 15 U.S.C. 78f(b)(8).

[18] *See* Securities Exchange Act Release No. 42824 (May 25, 2000), 65 FR 37442 (June 14, 2000).

[19] *See* Securities Exchange Act Release No. 44020 (February 28, 2001), 66 FR 13985 (March 8, 2001); Securities Exchange Act Release No. 44749 (August 28, 2001); 66 FR 46487 (September 5, 2001).

[20] 15 U.S.C. 78s(b).

[21] 15 U.S.C. 78s(b)(2).

[22] 17 CFR 200.30–3(a)(12).

SMALL BUSINESS ADMINISTRATION

Reporting and Recordkeeping Requirements Under OMB Review

AGENCY: Small Business Administration.

ACTION: Notice of reporting requirements submitted for OMB review.

SUMMARY: Under the provisions of the Paperwork Reduction Act (44 U.S.C. Chapter 35), agencies are required to submit proposed reporting and recordkeeping requirements to OMB for review and approval, and to publish a notice in the **Federal Register** notifying the public that the agency has made such a submission.

DATES: Submit comments on or before November 1, 2001. If you intend to comment but cannot prepare comments promptly, please advise the OMB Reviewer and the Agency Clearance Officer before the deadline.

COPIES: Request for clearance (OMB 83–1), supporting statement, and other documents submitted to OMB for review may be obtained from the Agency Clearance Officer.

ADDRESSES: Address all comments concerning this notice to: *Agency Clearance Officer,* Jacqueline White, Small Business Administration, 409 3rd Street, SW., 5th Floor, Washington, DC 20416; and *OMB Reviewer,* Office of Information and Regulatory Affairs, Office of Management and Budget, New Executive Office Building, Washington, DC 20503.

FOR FURTHER INFORMATION CONTACT: Jacqueline White, Agency Clearance Officer, (202) 205–7044.

SUPPLEMENTARY INFORMATION:

Title: Personal Financial Statement.
No: 413.
Frequency: On occasion.
Description of Respondents: Small Business Loan Applicants.
Responses: 187,027.
Annual Burden: 280,608.

Jacqueline White,

Chief, Administrative Information Branch.

[FR Doc. 01–24557 Filed 10–1–01; 8:45 am]

BILLING CODE 8025–01–P

SMALL BUSINESS ADMINISTRATION

Declaration of Military Reservist Economic Injury Disaster Loan #T101

As a result of the Declaration of National Emergency by Reason of Certain Terrorist Attacks at the World Trade Center, New York, New York, and the Pentagon, and the continuing and immediate threat of further attacks on the United States, President George W. Bush declares that the national emergency has existed since September 11, 2001. This notice establishes the application filing period for the Military Reservist Economic Injury Disaster Loan program. Effective September 11, 2001, small businesses employing military reservists may apply for economic injury disaster loans if those employees are called up to active duty during a period of military conflict existing on or after September 11, 2001, those employees are essential to the success of the small business daily operations and the business has suffered or is likely to suffer substantial economic injury as a result of the absence of the essential employee. The filing period for small businesses to apply for economic injury loan assistance under the Military Reservist Economic Injury Disaster Loan Program begins on the date the essential employee is ordered to active duty and ends on the date 90 days after the essential employee is discharged or released from active duty.

This Declaration includes the States of Connecticut, Delaware, Maryland, Maine, Massachusetts, New Hampshire, New Jersey, New York, Pennsylvania, Rhode Island, Virginia, Vermont, West Virginia; The District of Columbia; The Commonwealth of Puerto Rico; and The Virgin Islands.

Applications for loans for military reservist economic injury loans may be obtained and filed at the address listed below: U.S. Small Business Administration, Disaster Area 1 Office, 360 Rainbow Blvd., South 3rd Fl., Niagara Falls, NY 14303, 1–800–659–2955.

The interest rate for eligible small businesses is 4 percent. The number assigned for economic injury is T10100.

(Catalog of Federal Domestic Assistance Program No. 59002.)

Dated: September 25, 2001.

Herbert L. Mitchell,

Associate Administrator for Disaster Assistance.

[FR Doc. 01–24553 Filed 10–1–01; 8:45 am]

BILLING CODE 8025–01–P

SMALL BUSINESS ADMINISTRATION

Declaration of Military Reservist Economic Injury Disaster Loan #T201

As a result of the Declaration of National Emergency by Reason of Certain Terrorist Attacks at the World Trade Center, New York, New York, and the Pentagon, and the continuing and immediate threat of further attacks on the United States, President George W. Bush declares that the national emergency has existed since September 11, 2001. This notice establishes the application filing period for the Military Reservist Economic Injury Disaster Loan program. Effective September 11, 2001, small businesses employing military reservists may apply for economic injury disaster loans if those employees are called up to active duty during a period of military conflict existing on or after September 11, 2001, those employees are essential to the success of the small business daily operations and the business has suffered or is likely to suffer substantial economic injury as a result of the absence of the essential employee. The filing period for small businesses to apply for economic injury loan assistance under the Military Reservist Economic Injury Disaster Loan Program begins on the date the essential employee is ordered to active duty and ends on the date 90 days after the essential employee is discharged or released from active duty.

This Declaration includes the States of: Alabama, Florida, Georgia, Illinois, Indiana, Kentucky, Michigan, Minnesota, Mississippi, North Carolina, Ohio, South Carolina, Tennessee, and Wisconsin.

Applications for loans for military reservist economic injury loans may be obtained and filed at the address listed below: U.S. Small Business Administration, Disaster Area 2 Office, One Baltimore Place, Suite 300, Atlanta, GA 30308, 1–800–359–2227.

The interest rate for eligible small businesses is 4 percent. The number assigned for economic injury is T20100.

(Catalog of Federal Domestic Assistance Program No. 59002.)

Dated: September 25, 2001.

Herbert L. Mitchell,

Associate Administrator for Disaster Assistance.

[FR Doc. 01–24554 Filed 10–1–01; 8:45 am]

BILLING CODE 8025–01–P

SMALL BUSINESS ADMINISTRATION

Declaration of Military Reservist Economic Injury Disaster Loan #T301

As a result of the Declaration of National Emergency by Reason of Certain Terrorist Attacks at the World Trade Center, New York, New York, and the Pentagon, and the continuing and immediate threat of further attacks on the United States, President George W. Bush declares that the national emergency has existed since September 11, 2001. This notice establishes the application filing period for the Military Reservist Economic Injury Disaster Loan program. Effective September 11, 2001, small businesses employing military reservists may apply for economic injury disaster loans if those employees are called up to active duty during a period of military conflict existing on or after September 11, 2001, those employees are essential to the success of the small business daily operations and the business has suffered or is likely to

suffer substantial economic injury as a result of the absence of the essential employee. The filing period for small businesses to apply for economic injury loan assistance under the Military Reservist Economic Injury Disaster Loan Program begins on the date the essential employee is ordered to active duty and ends on the date 90 days after the essential employee is discharged or released from active duty.

This Declaration includes the States of: Arkansas, Colorado, Iowa, Kansas, Louisiana, Missouri, Montana, North Dakota, Nebraska, New Mexico, South Dakota, Oklahoma, Texas, Utah, and Wyoming.

Applications for loans for military reservist economic injury loans may be obtained and filed at the address listed below: U.S. Small Business Administration, Disaster Area 3 Office, 4400 Amon Carter Blvd., Suite 102, FT. Worth, TX 76155, 1–800–366–6303.

The interest rate for eligible small businesses is 4 percent. The number assigned for economic injury is T30100.

(Catalog of Federal Domestic Assistance Program No. 59002.)

Dated: September 24, 2001.

Herbert L. Mitchell,

Associate Administrator for Disaster Assistance.

[FR Doc. 01–24555 Filed 10–1–01; 8:45 am]

BILLING CODE 8025–01–P

SMALL BUSINESS ADMINISTRATION

Declaration of Military Reservist Economic Injury Disaster Loan #T401

As a result of the Declaration of National Emergency by Reason of Certain Terrorist Attacks at the World Trade Center, New York, New York, and the Pentagon, and the continuing and immediate threat of further attacks on the United States, President George W. Bush declares that the national emergency has existed since September 11, 2001. This notice establishes the application filing period for the Military Reservist Economic Injury Disaster Loan program. Effective September 11, 2001, small businesses employing military reservists may apply for economic injury disaster loans if those employees are called up to active duty during a period of military conflict existing on or after September 11, 2001, those employees are essential to the success of the small business daily operations and the business has suffered or is likely to suffer substantial economic injury as a result of the absence of the essential employee. The filing period for small businesses to apply for economic injury loan assistance under the Military Reservist Economic Injury Disaster Loan Program begins on the date the essential employee is ordered to active duty and ends on the date 90 days after the essential employee is discharged or released from active duty.

This Declaration includes the States of: Alaska, Arizona, California, Hawaii, Idaho, Nevada, Oregon, Washington; The Islands of American Samoa, Marshall Islands, Micronesia and Guam.

Applications for loans for military reservist economic injury loans may be obtained and filed at the address listed below: U.S. Small Business Administration, Disaster Area 4 Office, P. O. Box 13795, Sacramento, CA 95853–4795, 1–800–488–5323.

The interest rate for eligible small businesses is 4 percent. The number assigned for economic injury is T40100.

(Catalog of Federal Domestic Assistance Program No. 59002.)

Dated: September 25, 2001.

Herbert L. Mitchell,

Associate Administrator, for Disaster Assistance.

[FR Doc. 01–24556 Filed 10–1–01; 8:45 am]

BILLING CODE 8025–01–P

SMALL BUSINESS ADMINISTRATION

[Declaration of Economic Injury Disaster #9M86]

State of Texas

Cameron County and the contiguous counties of Hidalgo and Willacy in the State of Texas constitute an economic injury disaster loan area as a result of the catastrophic collapse of the Queen Isabella Causeway on September 15, 2001. Eligible small businesses and small agricultural cooperatives without credit available elsewhere may file applications for economic injury assistance as a result of this disaster until the close of business on June 16, 2002 at the address listed below or other locally announced locations: U.S. Small Business Administration, Disaster Area 3 Office, 4400 Amon Carter Blvd., Suite 102, FT. Worth, TX 76155.

The interest rate for eligible small businesses and small agricultural cooperatives is 4 percent. The number assigned for economic injury for this disaster is 9M8600.

(Catalog of Federal Domestic Assistance Program No. 59002.)

Dated: September 26, 2001.

Hector V. Barreto,

Administrator.

[FR Doc. 01–24558 Filed 10–1–01; 8:45 am]

BILLING CODE 8025–01–P

SMALL BUSINESS ADMINISTRATION

Interest Rates

The Small Business Administration publishes an interest rate called the optional ''peg'' rate (13 CFR 120.214) on a quarterly basis. This rate is a weighted average cost of money to the government for maturities similar to the average SBA direct loan. This rate may be used as a base rate for guaranteed fluctuating interest rate SBA loans. This rate will be 5.250 (5¼) percent for the October–December quarter of FY 2002.

LeAnn M. Oliver,

Deputy Associate Administrator for Financial Assistance.

[FR Doc. 01–24552 Filed 10–1–01; 8:45 am]

BILLING CODE 8025–01–P

DEPARTMENT OF TRANSPORTATION

Coast Guard

[CGD09–01–123]

Great Lakes Regional Waterways Management Forum

AGENCY: Coast Guard, DOT.

ACTION: Notice of meeting.

SUMMARY: ''The Great Lakes Regional Waterways Management Forum'' will hold a meeting to discuss various waterways management issues. Agenda items will include updates on Great Lakes dredging and No Ballast On Board (NOBOB) research; progress reports from Forum Subcommittees on Communications, Navigation Technologies, Outreach, Cruise Ships and Ballast Water; and discussions about the agenda for the next meeting. The meeting will be open to the public.

DATES: The meeting will be held October 9, 2001 from 1 p.m. to 3:30 p.m. Comments must be submitted on or before October 5, 2001 to be considered at the meeting

ADDRESSES: The meeting will be held in the U.S. Coast Guard Club located on the U. S. Coast Guard Moorings, 1055 East Ninth Street, Cleveland, OH 44199. Any written comments and materials should be submitted to Commander (map), Ninth Coast Guard District, 1240 E. 9th Street, Room 2069, Cleveland, OH 44199.

FOR FURTHER INFORMATION CONTACT: CDR Michael Gardiner (map), Ninth Coast Guard District, OH 44199, telephone (216) 902–6049. Persons with disabilities requiring assistance to attend this meeting should contact CDR Gardiner.

SUPPLEMENTARY INFORMATION: The Great Lakes Waterways Management Forum identifies and resolves waterways management issues that involve the Great Lakes region. The forum meets twice a year to assess the Great Lakes region, assign priorities to areas of concern and identify issues for resolution. The forum membership has identified agenda items for this meeting that include: updates on Great Lakes dredging and No Ballast On Board (NOBOB) research; progress reports from Forum Subcommittees on Communications, Navigation Technologies, Outreach, Cruise Ships and Ballast Water; and discussions about the agenda for the next meeting. Additional topics of discussion are solicited from the public.

Dated: September 11, 2001.

James D. Hull,

Rear Admiral, U.S. Coast Guard, Commander, Ninth Coast Guard District, Cleveland, Ohio.

[FR Doc. 01–24537 Filed 10–1–01; 8:45 am]

BILLING CODE 4910–15–U

DEPARTMENT OF TRANSPORTATION

Federal Aviation Administration

Change Notice for RTCA Program Management Committee

AGENCY: Federal Aviation Administration (FAA), DOT.

ACTION: Notice of change to RTCA Program Management Committee meeting.

SUMMARY: The FAA is issuing this notice to advise the public of a change to a meeting of the RTCA Program Management Committee.

DATES: The September 13, 2001 meeting announced in the **Federal Register** Volume 66 FR 43951 (Tuesday, August 21, 2001), 3rd column, has been changed. The meeting will now be held on October 12, 2001, starting at 8:30 am.

ADDRESSES: The meeting will be held at RTCA, Inc., 1828 L Street, NW., Suite 850, Washington, DC 20036.

FOR FURTHER INFORMATION CONTACT: RTCA Secretariat, 1828 L Street, NW., Suite 850, Washington, DC 20036; telephone (202) 833–9339; fax (202) 833–9434; web site *http://www.rtca.org.*

SUPPLEMENTARY INFORMATION: Pursuant to section 10(a)(2) of the Federal Advisory Committee (Pub. L. 92–463, 5 U.S.C., Appendix 2), notice is hereby given for a change to a Program Management Committee meeting. The revised agenda will include:

- October 12:
- Opening Session (Welcome and Introductory Remarks, Review/Approve Summary of Previous Meeting)
- Publication Consideration/Approval:
  - Final Draft, Minimum Aviation System Performance Standards (MASPS) of the Aeronautical Mobile-Satellite (R) Service (AMS(R)S) as Used in Aeronautical Data Links, RTCA Paper No. 194–01/PMC–156, prepared by SC–165
  - Final Draft, Minimum Operational Performance Standards (MOPS) for Aircraft VDL Mode 3 Transceiver Operating in the Frequency Range 117.975–137.000 MHz, prepared by SC–172, RTCA Paper No. 190–01/PMC–154
  - Final Draft, Change 1, DO–224A, Signal-in-Space Minimum Aviation System Performance Standards (MASPS) for Advanced VHF Digital Data Communication Including Compatibility with Digital Voice Techniques, RTCA Paper No. 212–01/PMC–160, prepared by SC–172
  - Final Draft DO–248B, Final Annual Report for Clarification of DO–178B Software Considerations in Airborne Systems and Equipment Certification, RTCA Paper No. 224–01/PMC–162, prepared by Joint Committee SC–190/WG–52
  - Final Draft, User Requirements for Aerodrome Mapping Information, RTCA Paper No. 191–01/PMC–155, prepared by Joint Committee SC–193–WG–44
  - Final Draft, Response to the Report of the RTCA Chairman's Committee on NEXCOM, RTCA Paper No. 243–01/PMC–166, prepared by SC–198
  - Final Draft, Minimum Operational Performance Standards for Integrated Night Vision Imaging System Equipment, RTCA Paper No. 238–01/PMC–164, prepared by SC–196
- Discussion:
  - Special Committee 188, High Frequency Data Link; Request for Extension of due date
  - Special Committee 189, NEXCOM; Update to Terms of Reference
  - Special Committee 147, TCAS; Proposed Additional Tasking
  - Special Committee Chairman's Report.
- Action Item Review:
  - Action Item 05–01, Recommendation for a Multi-Function Display
  - Action Item 06–01, Modular Avionics Special Committee to work jointly with EUROCAE Working Group
- Closing Session (Other Business, Document Production, Date and Place of Next Meeting, Adjourn)

Attendance is open to the interested public but limited to space availability. With the approval of the chairmen, members of the public may present oral statements at the meeting. Persons wishing to present statements or obtain information should contact the person listed in the **FOR FURTHER INFORMATION CONTACT** section. Members of the public may present a written statement to the committee at any time.

Issued in Washington, DC, on September 24, 2001.

Janice L. Peters,

FAA Special Assistant, RTCA Advisory Committee.

[FR Doc. 01–24616 Filed 10–1–01; 8:45 am]

BILLING CODE 4910–13–M

DEPARTMENT OF TRANSPORTATION

Federal Aviation Administration

Final Meeting of the RTCA Future Flight Data Collection Committee

AGENCY: Federal Aviation Administration (FAA), DOT.

ACTION: Notice of RTCA Future Flight Data Collection Committee final meeting.

SUMMARY: The FAA is issuing this notice to advise the public of the final meeting of the RTCA Future Flight Data Collection Committee.

DATES: The meeting will be held October 15, 2001 starting at 1 pm.

ADDRESSES: The meeting will be held at RTCA, Inc., 1828 L Street, NW., Suite 805, Washington, DC 20036.

FOR FURTHER INFORMATION CONTACT: RTCA Secretariat, 1828 L Street, NW., Suite 805, Washington, DC 20036; telephone (202) 833–9339; fax (202) 833–9434; web site *http://www.rtca.org.*

SUPPLEMENTARY INFORMATION: Pursuant to section 10(a)(2) of the Federal Advisory Committee Act (Pub. L. 92–463, 5 U.S.C., Appendix 2), notice is hereby given for the Future Flight Data Collection Committee final meeting. The agenda will include:

- October 15:
- Opening Session (Welcome, Introductions, Administrative Remarks, Agenda Review, Review/Approve Summary of Previous Meeting)
- Review and Discuss Comments Submitted on the Final Report; Establish Final Changes based on Accepted Comments; Consider the Document for Approval to Forward to the RTCA Policy Board
- Closing Session (Other Business, Adjourn)

Attendance is open to the interested public but limited to space availability. With the approval of the chairmen, members of the public may present oral statements at the meeting. Persons wishing to present statements or obtain information should contact the person listed in the **FOR FURTHER INFORMATION CONTACT** section. Members of the public may present a written statement to the committee at any time.

Issued in Washington, DC on September 24, 2001.

Janice L. Peters,

FAA Special Assistant, RTCA Advisory Committee.

[FR Doc. 01–24617 Filed 10–01–01; 8:45 am]

BILLING CODE 4910–13–M

DEPARTMENT OF TRANSPORTATION

Federal Aviation Administration

RTCA Special Committee 165: Minimum Operational Performance Standards for Aeronautical Mobile Satellite Services

AGENCY: Federal Aviation Administration (FAA), DOT.

ACTION: Notice of RTCA Special Committee 165 meeting.

SUMMARY: The FAA is issuing this notice to advise the public of a meeting of RTCA Special Committee 165: Minimum Operational Performance Standards for Aeronautical Mobile Satellite Services.

DATES: The meeting will be held October 3, 2001 starting at 9 am.

ADDRESSES: The meeting will be held in the RTCA Inc., 1828 L Street, NW., Suite 805, Washington, DC 20036.

FOR FURTHER INFORMATION CONTACT: RTCA Secretariat, 1828 L Street, NW., Washington, DC 20036; telephone (202) 833–9339; fax (202) 833–9434; web site *http://www.rtca.org.*

SUPPLEMENTARY INFORMATION: Pursuant to section 10(a)(2) of the Federal Advisory Committee Act (Pub. L. 92–463, 5 U.S.C., Appendix 2), notice is hereby given for a Special Committee 165 meeting. The agenda will include:

- October 3:
- Opening Session (Welcome and Introductory Remarks, Review/Approve Summary of Previous Meeting, Chairman's Remarks)
- Review of SC–165 Working Group Activities
  - Working Group 1 [Aeronautical Mobile-Satellite (R) Service (AMS(R)S) Avionics Equipment Minimum Operational Performance Standard (MOPS)]
  - Working Group 3 [AMS(R)S Minimum Aviation Performance Standard (MASPS)]
- Complete Final Review and Comment (FRAC) Process for:
  - Change No. 2 to DO–210D
  - Change No. 1 to DO–262
- Brief Overview of Related Activities
  - AEEC 741 and 761 Characteristics
  - EUROCAE Working Group 55
  - AMS(R)S Spectrum Issues; International Telecommunications Union and European Telecommunication Standards Institute
  - ICAO Aeronautical Mobile Communications Panel
  - Industry, Users, Government
- Closing Session (Other Business, Date and Place of Next Meeting, Adjourn)

Attendance is open to the interested public but limited to space availability. With the approval of the chairmen, members of the public may present oral statements at the meeting. Persons wishing to present statements or obtain information should contact the person listed in the **FOR FURTHER INFORMATION CONTACT** section. Members of the public may present a written statement to the committee at any time.

Issued in Washington, DC on September 24, 2001.

Janice L. Peters,

FAA Special Assistant, RTCA Advisory Committee.

[FR Doc. 01–24618 Filed 10–1–01; 8:45 am]

BILLING CODE 4910–13–M

DEPARTMENT OF TRANSPORTATION

Federal Aviation Administration

Notice of Intent To Rule on Application to Impose and Use the Revenue From a Passenger Facility Charge (PFC) at Austin Straubel International Airport, Green Bay, WI

AGENCY: Federal Aviation Administration (FAA), DOT.

ACTION: Notice of intent to rule on application.

SUMMARY: The FAA proposes to rule and invites public comment on the application to impose and use the revenue from a PFC at Austin Straubel International Airport under provisions of the Aviation Safety and Capacity Expansion Act of 1990 (Title IX of the Omnibus Budget Reconciliation Act of 1990) (Pub. L. 101–5–8) and part 158 of the Federal Aviation Regulations (14 CFR part 158).

DATES: Comments must be received on or before November 1, 2001.

ADDRESSES: Comments on this application may be mailed or delivered in triplicate to the FAA at the following address: Minneapolis Airports District Office, 6020 28th Avenue South, Room 102, Minneapolis, Minnesota 55450.

In addition, one copy of any comments submitted to the FAA must be mailed or delivered to Mr. Thomas W. Miller, Interim Airport Director, Austin Straubel International Airport at the following address: 2077 Airport Drive, Green Bay, Wisconsin 54313–5596.

Air carriers and foreign air carriers may submit copies of written comments previously provided to brown County, Wisconsin under § 158.23 of part 158.

FOR FURTHER INFORMATION CONTACT: Mr. Daniel J. Millenacker, Program Manager, Federal Aviation Administration, Airports District Office, 6020 28th Avenue South, Room 102, Minneapolis, Minnesota 55450, (612) 713–4350. The application may be reviewed in person at this same location.

SUPPLEMENTARY INFORMATION: The FAA proposes to rule and invites public comment on the application to impose and use the revenue from a PFC at Austin Straubel International Airport under provisions of the Aviation Safety and Capacity Expansion Act of 1990 (Title IX of the Omnibus Budget Reconciliation Act of 1990) (Pub. L. 101–508) and part 158 of the Federal Aviation Regulations (14 CFR part 158).

On September 13, 2001, the FAA determined that the application to impose and use the revenue from a PFC submitted by Brown County, Wisconsin was substantially complete within the requirements of § 158.25 of part 158. The FAA will approve or disapprove the application, in whole or in part, no later than January 5, 2002.

The following is a brief overview of the application.

PFC application number: 01–03–C–00–GRB.

Level of the proposed PFC: $4.50.

Proposed charge effective date: March 1, 2002.

Proposed charge expiration date: October 1, 2002.

Total estimated PFC revenue: $1,023,400.00.

Brief description of proposed projects: Parallel taxiway ''D'' and ''M'' construction and PFC administrative costs. Class or classes of air carriers which the public agency has requested not be required to collect PFCs: Part 135 air taxi/commercial operators (ATCO).

Any person may inspect the application in person at the FAA office listed above under **FOR FURTHER INFORMATION CONTACT.**

In addition, any person may, upon request, inspect the application, notice and other documents germane to the application in person at the Austin Straubel International Airport, 2077 Airport Drive, Green Bay, Wisconsin 54313–5596.

Issued in Des Plaines, Illinois on September 17, 2001.

Gary E. Nielsen,

Acting Manager, Planning and Programming Branch, Airports Division, Great Lakes Region.

[FR Doc. 01–24614 Filed 10–1–01; 8:45 am]

BILLING CODE 4910–13–M

DEPARTMENT OF TRANSPORTATION

Federal Aviation Administration

Notice of Intent to Rule on Application To Impose and Use the Revenue From a Passenger Facility Charge (PFC) at Cleveland Hopkins International Airport, Cleveland, OH

AGENCY: Federal Aviation Administration (FAA), DOT.

ACTION: Notice of intent to rule on application.

SUMMARY: The FAA proposes to rule and invites public comment on the application to impose and use the revenue from a PFC at Cleveland Hopkins International Airport under the provisions of the Aviation Safety and Capacity Expansion Act of 1990 (Title IX of the Omnibus Budget Reconciliation Act of 1990) (Pub. L. 101–508) and part 158 of the Federal Aviation Regulations (14 CFR part 158).

DATES: Comments must be received on or before November 1, 2001.

ADDRESSES: Comments on this application may be mailed or delivered in triplicate to the FAA at the following address: Federal Aviation Administration, Detroit Airports District Office, Willow Run Airport, East, 8820 Beck Road Belleville, Michigan 48111 (734–487–7282). The application may be review in person at this location.

In addition, one copy of any comments submitted to the FAA must be mailed or delivered to Mr. Reuben Sheperd, Director, Cleveland Hopkins International Airport at the following address: Cleveland Hopkins International Airport, 5300 Riverside Drive, Cleveland, Ohio 44135.

Air carriers and foreign air carriers may submit copies of written comments previously provided to the Cleveland Hopkins International Airport under § 158.23 of part 158.

FOR FURTHER INFORMATION CONTACT: Ms. Arlene B. Draper, Program Manager, Federal Aviation Administration, Detroit Airports District Office, Willow Run Airport, East, 8820 Beck Road Belleville, Michigan 48111 (734–487–7282). The application may be reviewed in person at this same location.

SUPPLEMENTARY INFORMATION: The FAA proposes to rule and invites public comment on the application to impose and use the revenue from a PFC at Cleveland Hopkins International Airport under the provisions of the Aviation Safety and Capacity Expansion Act of 1990 (Title IX of the Omnibus Budget Reconciliation Act of 1990) (Public Law 101–508) and Part 158 of the Federal Aviation Regulations (14 CFR Part 158).

On September 6, 2001, the FAA determined that the application to impose and use the revenue from a PFC submitted by Cleveland Hopkins International Airport was substantially complete within the requirements of § 158.25 of part 158. The FAA will approve or disapprove the application, in whole or in part, not later than December 29, 2001.

The following is a brief overview of the application.

PFC application number: 01–08–C–00–CLE.

Level of the proposed PFC: $3.00.

Proposed charge effective date: October 1, 2004.

Proposed charge expiration date: November 1, 2008.

Total estimated PFC revenue: $82,106,000.00.

Brief description of proposed project: Construct Runway 6L/23R.

Class or classes of air carriers which the public agency has requested to be required to collect PFCs: air taxis.

Any person may inspect the application in person at the FAA office listed above under **FOR FURTHER INFORMATION CONTACT**.

In addition, any person may, upon request, inspect the application, notice and other documents germane to the application in person at the Cleveland Hopkins International Airport, 5300 Riverside Drive, Cleveland, Ohio 44135.

Issued in Des Plaines, Illinois on September 17, 2001.

Gary E. Nielsen,

Acting Manager, Planning and Programming Branch, Airports Division, Great Lakes Region.

[FR Doc. 01–24613 Filed 10–1–01; 8:45 am]

BILLING CODE 4910–13–M

DEPARTMENT OF TRANSPORTATION

Federal Aviation Administration

Notice of Opportunity for Public Comment on Surplus Property Release at Georgetown County Airport, Georgetown, SC

AGENCY: Federal Aviation Administration (FAA), DOT.

ACTION: Notice.

SUMMARY: Under the provisions of Title 49, U.S.C. 47153(c), notice is being given that the FAA is considering a request from the Georgetown County Airport Commission to waive the requirement that a 12.43—acre parcel of surplus property, located at the Georgetown County Airport, be used for aeronautical purposes.

DATES: Comments must be received on or before November 1, 2001.

ADDRESSES: Comments on this notice may be mailed or delivered in triplicate to the FAA at the following address: Atlanta Airports District Office, Attn: Anthony L. Cochran, Program Manager, 1701 Columbia Ave., Suite 2–260, Atlanta, GA 30337–2747.

In addition, one copy of any comments submitted to the FAA must be mailed or delivered to A.J. Rigby, Chairman of the Georgetown County Airport Commission at the following address: 302 Sundial Drive, PO Box 3757, Pawley's Island, SC 29585

FOR FURTHER INFORMATION CONTACT: Anthony Cochran, Program Manager, Atlanta Airports District Office, 1701 Columbia Ave., Suite 2–260, Atlanta, GA 30337–2747, (404) 305–7144. The application may be reviewed in person at this same location.

SUPPLEMENTARY INFORMATION: The FAA is reviewing a request by the Georgetown County Airport Commission to release 12.43 acres of surplus property at the Georgetown County Airport. The property will be purchased by Marhaygue, LLC and used to expand an existing adjacent manufacturing plant. The net proceeds from the sale of this property will be used for airport purposes. The proposed use of this property is compatible with airport operations.

Any person may inspect the request in person at the FAA office listed above under **FOR FURTHER INFORMATION CONTACT**. In addition, any person may, upon request, inspect the request, notice and other documents germane to the request in person at the Georgetown County Airport Commission.

Issued in Atlanta, Georgia on September 20, 2001.

Scott L. Seritt,

Manager, Atlanta Airports District Office, Southern Region.

[FR Doc. 01–24612 Filed 10–1–01; 8:45 am]

BILLING CODE 4910–13–M

DEPARTMENT OF TRANSPORTATION

Federal Aviation Administration

Notice of Intent to Rule on Application 01–04–C–00–PSC to impose and use the revenue from a passenger facility charge (PFC) at Tri-Cities Airport, submitted by the Port of Pasco, Tri-Cities Airport, Pasco, WA

AGENCY: Federal Aviation Administration (FAA), DOT.

ACTION: Notice of Intent to Rule on Application.

SUMMARY: The FAA proposes to rule and invites public comment on the application to impose and use PFC revenue at Tri-Cities Airport under the provisions of 49 U.S.C. 40117 and Part 158 of the Federal Aviation Regulations (14 CFR part 158).

DATES: Comments must be received on or before November 1, 2001.

ADDRESSES: Comments on this application may be mailed or delivered in triplicate to the FAA at the following address: Mr. J. Wade Bryant, Manager; Seattle Airports District Office, SEA-ADO; Federal Aviation Administration; 1601 Lind Avenue SW, Suite 250, Renton, Washington 98055–4056.

In addition, one copy of any comments submitted to the FAA must be mailed or delivered to Mr. James Morasch, A.A.E., Director of Airports at the following address: 3601 North 20th Avenue, Pasco, Washington 99301.

Air Carriers and foreign air carriers may submit copies of written comments previously provided to Tri-Cities Airport, under § 158.23 of part 158.

FOR FURTHER INFORMATION CONTACT: Ms. Suzanne Lee-Pang, (425) 227–2654, Seattle Airports District Office, SEA-ADO; Federal Aviation Administration; 1601 Lind Avenue SW, Suite 250, Renton, Washington 98055–4056. The application may be reviewed in person at this same location.

SUPPLEMENTARY INFORMATION: The FAA proposes to rule and invites public comment on the application (01–04–C–00–PSC) to impose and use PFC revenue at Tri-Cities Airport, under the provisions of 49 U.S.C. 40117 and part 158 of the Federal Aviation Regulations (14 CFR part 158).

On September 21, 2001, the FAA determined that the application to application impose and use the revenue from a PFC submitted by Port of Pasco, Tri-Cities Airport, Pasco, Washington, was substantially complete within the requirements of § 158.25 of part 158. The FAA will approve or disapprove the application, in whole or in part, no later than December 25, 2001.

The following is a brief overview of the application.

Level of the proposed PFC: $4.50.

Proposed charge effective date: December 1, 2002.

Proposed charge expiration date: April 1, 2004.

Total requested for use approval: $1,059,136.

Brief description of proposed project: Snow Removal Equipment; Navigation Aids; Runway Safety Area Improvements; Security Access Control System; Runway Reconstruction;

Class or classes of air carriers, which the public agency has requested not be required to collect PFC's: None

Any person may inspect the application in person at the FAA office listed above under **FOR FURTHER INFORMATION CONTACT** and at the FAA Regional Airports Office located at: Federal Aviation Administration, Northwest Mountain Region, Airports Division, ANM–600, 1601 Lind Avenue SW., Suite 315, Renton, WA 98055–4056.

In addition, any person may, upon request, inspect the application, notice and other documents germane to the application in person at the Tri-Cities Airport.

Issued in Renton, Washington on September 21, 2001.

David A. Field,

Manager, Planning, Programming and Capacity Branch, Northwest Mountain Region.

[FR Doc. 01–24619 Filed 10–1–01; 8:45 am]

BILLING CODE 4910–13–M

DEPARTMENT OF TRANSPORTATION

Federal Aviation Administration

[Policy Statement No. ASW–2001–01]

Policy for Certification Guidelines for Compliance to the Requirements for Electro-Magnetic Compatibility (EMC) Testing for ''Equipment Known to Have a High Potential for Interference'' When Installed on Rotorcraft With Electronic Controls That Provide Critical Functions

AGENCY: Federal Aviation Administration, DOT.

ACTION: Notice of proposed policy statement; request for comments.

SUMMARY: The Federal Aviation Administration (FAA) announces the availability of a proposed policy for conducting EMC testing on rotorcraft equipped with Electrical/Electronic Controls that provide critical functions, such as Full Authority Digital Engine Controls (FADEC) Systems and Fly-By-Wire Flight Controls Systems. This proposed policy would revise the current policy by eliminating certain types of equipment from the requirement to undergo special installation Electromagnetic Interference testing.

DATES: Comments must be received by October 28, 2001.

ADDRESSES: Send all comments on the proposed policy to the individual identified under **FOR FURTHER INFORMATION CONTACT.**

FOR FURTHER INFORMATION CONTACT: Jorge Castillo, FAA, Rotorcraft Directorate Standards Staff, ASW–110, 2601 Meacham Blvd., Ft. Worth, TX 76193–0110; email address: <jorge.r.castillo@faa.gov>; telephone: (817) 222–5127; fax: (817) 222–5961.

SUPPLEMENTARY INFORMATION:

Comments Invited

The proposed policy statement is available on the Internet at the following address: *http://www.faa.gov/avr/air/asw/rotor.htm.* If you do not have access to the Internet, you may request a copy of the proposed policy statement by contacting the individual listed under **FOR FURTHER INFORMATION CONTACT.** The FAA invites interested parties to comment on the proposed policy. Comments should identify the subject of the proposed policy and be submitted to the individual identified under **FOR FURTHER INFORMATION CONTACT.** The FAA will consider all comments received by the closing date before issuing the final policy.

Background

On March 31, 1998, the FAA's Rotorcraft Directorate Standards Staff, issued policy that provides guidance for conducting EMC testing on rotorcraft equipped with electrical/electronic controls that provide critical functions. The FAA is now proposing to revise the previous March 31, 1998, policy by eliminating certain types of equipment from the requirement to undergo special installation Electromagnetic Interference testing.

Authority: 49 U.S.C. 106(g), 40113, 44701–44702, 44704.

Issued in Ft. Worth, Texas, on September 24, 2001.

David A. Downey,

Manager, Rotorcraft Directorate, Aircraft Certification Service.

[FR Doc. 01–24615 Filed 10–1–01; 8:45 am]

BILLING CODE 4910–13–M

DEPARTMENT OF THE TREASURY

Submission for OMB Review; Comment Request

September 26, 2001.

The Department of Treasury has submitted the following public information collection requirement(s) to OMB for review and clearance under the Paperwork Reduction Act of 1995, Public Law 104–13. Copies of the submission(s) may be obtained by calling the Treasury Bureau Clearance Officer listed. Comments regarding this information collection should be addressed to the OMB reviewer listed and to the Treasury Department Clearance Officer, Department of the Treasury, Room 2110, 1425 New York Avenue, NW., Washington, DC 20220.

Dates: Written comments should be received on or before November 1, 2001 to be assured of consideration.

Internal Revenue Service (IRS)

OMB Number: 1545–0803.

Form Number: IRS Form 5074.

Type of Review: Extension.

Title: Allocation of Individual Income Tax to Guam or the Commonwealth of the Northern Mariana Islands (CNMI).

Description: Form 5074 is used by U.S. citizens or residents as an attachment to Form 1040 when they have $50,000 or more in adjusted gross income from U.S. sources and $5,000 or more in gross income from Guam or the Commonwealth of the Northern Mariana Islands (CNMI). The data is used by IRS to allocate income tax due to Guam or CNMI as required by 26 U.S.C. 7654.

Respondents: Individuals or households, Not-for-profit institutions.

Estimated Number of Respondents/ Recordkeepers: 50.

Estimated Burden Hours Per Respondent/Recordkeeper:

Recordkeeping	2 hr., 57 min.
Learning about the law or the form.	8 min.
Preparing the form	49 min.
Copying, assembling, and sending the form to the IRS.	17 min.

Frequency of Response: Annually.

Estimated Total Reporting/ Recordkeeping Burden: 209 hours.

OMB Number: 1545–1135.

Form Number: IRS Form 8817.

Type of Review: Extension.

Title: Allocation of Patronage and Nonpatronage Income and Deductions.

Description: Form 8817 is filed by taxable farmers cooperatives to report their income and deductions by patronage and nonpatronage sources. The IRS uses the information on the form to ascertain the amounts of patronage and nonpatronage income or loss were properly computed.

Respondents: Business or other for-profit.

Estimated Number of Respondents/ Recordkeepers: 1,650.

Estimated Burden Hours Per Respondent/Recordkeeper:

Recordkeeping	16 hr., 44 min.
Learning about the law or the form.	36 min.
Preparing, copying, assembling, and sending the form to the IRS.	52 min.

Frequency of Response: Annually.

Estimated Total Reporting/ Recordkeeping Burden: 22,006 hours.

OMB Number: 1545–1352.

Regulation Project Number: PS–276–76 Final.

Type of Review: Extension.

Title: Treatment of Gain From Disposition of Certain Natural Resource Recapture Property.

Description: This regulation prescribes rules for determining the tax treatment of gain from the disposition of natural resource recapture property in accordance with Internal Revenue Code section 1254. Gain is treated as ordinary income in an amount equal to the intangible drilling and development costs and depletion deductions taken with respect to the property. The information that taxpayers are required to retain will be used by the IRS to determine whether a taxpayer has properly characterized gain on the disposition of section 1254 property.

Respondents: Individuals or households, Business or other for-profit.

Estimated Number of Respondents/ Recordkeepers: 400.

Estimated Burden Hours Per Respondent/Recordkeeper: 5 hours.

Frequency of Response: On occasion.

Estimated Total Reporting/ Recordkeeping Burden: 2,000 hours.

OMB Number: 1545–1416.

Form Number: IRS Form 8847.

Type of Review: Extension.

Title: Credit for Contributions to Selected Community Development Corporations.

Description: Form 8847 is used to claim a credit for qualified contributions to a selected community development corporation (CDC).

Respondents: Individuals or households, Business or other for-profit.

Estimated Number of Respondents/ Recordkeepers: 34.

Estimated Burden Hours Per Respondent/Recordkeeper:

Recordkeeping	6 hr., 42 min.
Learning about the law or the form.	24 min.
Preparing and sending the form to the IRS.	31 min.

Frequency of Response: Annually.

Estimated Total Reporting/ Recordkeeping Burden: 260 hours.

Clearance Officer: Garrick Shear, Internal Revenue Service, Room 5244, 1111 Constitution Avenue, NW, Washington, DC 20224.

OMB Reviewer: Alexander T. Hunt (202) 395–7860, Office of Management and Budget, Room 10202, New Executive Office Building, Washington, DC 20503.

Lois K. Holland,

Departmental Reports, Management Officer.

[FR Doc. 01–24610 Filed 10–1–01; 8:45 am]

BILLING CODE 4830–01–P

DEPARTMENT OF THE TREASURY

Departmental Offices; Debt Management Advisory Committee Meeting

Notice is hereby given, pursuant to 5 U.S.C. App. § 10(a)(2), that a meeting will be held at the U.S. Treasury Department, 15th and Pennsylvania Avenue, NW., Washington, DC, on October 30, 2001, of the following debt management advisory committee: Treasury Borrowing Advisory Committee of The Bond Market Association.

The agenda for the meeting provides for a technical background briefing by Treasury staff, followed by a charge by the Secretary of the Treasury or his designate that the Committee discuss particular issues, and a working session. Following the working session, the Committee will present a written report of its recommendations.

The background briefing by Treasury staff will be held at 9 a.m. Eastern time and will be opened to the public. The remaining sessions and the committee's reporting session will be closed to the public, pursuant to 5 U.S.C. App. 10(d).

This notice shall constitute my determination, pursuant to the authority placed in heads of departments by 5 U.S.C. App. 10(d) and vested in me by

Treasury Department Order No. 101–05, that the closed portions of the meeting are concerned with information that is exempt from disclosure under 5 U.S.C. 552b(c)(9)(A). The public interest requires that such meetings be closed to the public because the Treasury Department requires frank and full advice from representatives of the financial community prior to making its final decision on major financing operations. Historically, this advice has been offered by debt management advisory committees established by the several major segments of the financial community. When so utilized, such a committee is recognized to be an advisory committee under 5 U.S.C. App. § 3.

Although the Treasury's final announcement of financing plans may not reflect the recommendations provided in reports of the advisory committee, premature disclosure of the committee's deliberations and reports would be likely to lead to significant financial speculation in the securities market. Thus, these meetings fall within the exemption covered by 5 U.S.C. § 552b(c)(9)(A).

The Office of Financial Markets is responsible for maintaining records of debt management advisory committee meetings and for providing annual reports setting forth a summary of committee activities and such other matters as may be informative to the public consistent with the policy of 5 U.S.C. 552b.

Dated: September 25, 2001.

Brian C. Roseboro,

Assistant Secretary, Financial Markets.

[FR Doc. 01–24591 Filed 10–01–01; 8:45 am]

BILLING CODE 4810–25–M

DEPARTMENT OF THE TREASURY

Customs Service

Procedyres if the Generalized System of Preferences Program Expires

AGENCY: Customs Service, Treasury.

ACTION: General notice.

SUMMARY: The Generalized System of Preferences (GSP) is a renewable preferential trade program that allows the eligible products of designated developing countries to directly enter the United States free of duty. Except for beneficiary countries designated under the African Growth and Opportunity Act, the GSP will expire at midnight on September 30, 2001, unless its provisions are extended by Congress. This document provides notice to importers that claims for duty-free treatment under the GSP will not be processed by Customs for merchandise entered or withdrawn from a warehouse for consumption on or after October 1, 2001, if the program is not extended before that date. This document also sets forth the mechanisms that will facilitate refunds, should the GSP be renewed with retroactive effect.

DATES: The plan set forth in this document will become effective as of October 1, 2001, if Congress does not extend the GSP program before that date.

FOR FURTHER INFORMATION CONTACT: For specific questions relating to the Automated Commercial System:

James MacDonald, Office of Information and Technology, 703–921–1027.

For general operational questions:

Formal entries Arlene Lugo, 202–927–4183;

Informal entries Dan Norman, 202–927–0542;

Mail entries Robert Woods, 202–927–1236;

Passenger claims Wes Windle, 202–927–0167.

SUPPLEMENTARY INFORMATION:

Background

Section 501 of the Trade Act of 1974, as amended (19 U.S.C. 2461), authorizes the President to establish a Generalized System of Preferences (GSP) to provide duty-free treatment for eligible articles imported directly from designated beneficiary countries. Beneficiary developing countries and articles eligible for duty-free treatment under the GSP are designated by the President by Presidential Proclamation in accordance with sections 502(a) and 503(a) of the Trade Act of 1974, as amended (19 U.S.C. 2462(a) and 2463(a)). Pursuant to section 505 of the Trade Act of 1974, as amended (19 U.S.C. 2465), duty-free treatment under the GSP is scheduled to expire on September 30, 2001. However, this expiration date does not apply to African Growth and Opportunity Act (AGOA) beneficiary countries, for whom GSP duty-free treatment will remain in effect through September 30, 2008, pursuant to section 506B of the Trade Act of 1974, as amended (19 U.S.C. 2466b).

Congress is currently considering whether to extend the section 505 GSP expiration date. If Congress does not pass legislation extending that date before midnight, September 30, 2001, no claims for duty-free treatment under the program for non-AGOA beneficiary country exports will be processed by Customs on entries made after that time. If legislation extending that GSP expiration date is enacted after the GSP expires under section 505, language may be included that would make the GSP effective back to that expiration date.

Recognizing the effect that renewing GSP duty treatment with retroactive effect has on both importers, who must request refunds of duties deposited, and Customs, which must liquidate or reliquidate eligible entries, Customs developed a mechanism to facilitate certain refunds. Set forth below is Customs plan that will be implemented on October 1, 2001, in the case of all GSP beneficiary countries other than AGOA beneficiary countries, if the section 505 expiration date has not been extended by September 30, 2001.

Formal Entries

Claims—Duties Must Be Deposited

Although Customs will accept claims for GSP duty-free treatment, as specified below, Customs will not process the claim as duty free under the GSP for merchandise entered, or withdrawn from warehouse for consumption on or after October 1, 2001. Further, duties at the normal-trade-relations rate must be deposited, unless an alternate claim is made under another preferential program for which the merchandise qualifies (for example, the Andean Trade Preference Act or the Caribbean Basin Economic Recovery Act).

On or after October 1, 2001, for all merchandise that would qualify for the GSP were the GSP still in effect, Automated Broker Interface (ABI) filers must deposit duties at the normal-trade-relations rate with their entry summaries, but may continue to claim GSP duty-free treatment by using the Special Program Indicator (SPI) ''A'' as a prefix to the tariff number. Customs Automated Commercial System (ACS) will accept the SPI ''A'' transmission with the payment of duty. If the GSP is renewed with retroactive effect, the duties deposited will be refunded by Customs without further action by the ABI filer. In effect, use of the SPI ''A'' will constitute an ABI filer's request for a refund of duties paid for GSP line items if GSP is renewed with retroactive effect. It is noted that for ABI filers to take advantage of this system for receiving an automatic refund if GSP is renewed retroactively, the filers will have to reprogram their software to allow for the submission of estimated duties with the SPI ''A'' designation on entries. ABI filers who do not wish to reprogram their software will be required to request refunds in writing to the appropriate port director identifying

the affected entry numbers if the GSP is renewed with retroactive effect.

While reprogramming is strictly voluntary, continued use of the SPI ''A'' has some benefits: one already mentioned is that the filer will not have to request a refund of deposited duties in writing should the GSP be renewed with retroactive effect; another is that ACS will perform its usual edits on the information transmitted by the filer, thereby ensuring that GSP claims are for acceptable country/tariff combinations and eliminating the need for statistical corrections.

Importers may not use the SPI ''A'' if they intend to later claim drawback, because claiming both the refund of duties deposited and drawback would be to request a refund in excess of duties actually deposited. Importers who are unsure as to whether they will claim drawback are advised not to use the SPI ''A''. If the GSP is renewed with retroactive effect, and the importer has not claimed drawback or enabled another person to claim drawback, then the importer may request a refund of duties deposited by writing to the port director at the port of entry. Also, importers may not use the SPI ''A'' if they have made an alternative duty-free treatment claim to GSP (for example, the Andean Trade Preference Act or the Caribbean Basin Economic Recovery Act).

Refunds

1. Automatic

If an ABI entry summary was filed with the SPI ''A'', should the GSP be renewed with retroactive effect, then Customs will liquidate or reliquidate all affected ABI entry summaries with a refund for the GSP line items with no further action needed to be taken by the filer to request a refund.

2. Need for written request

If an ABI entry summary was filed without the SPI ''A'', then the request for a refund must be in writing. Further, all non-ABI filers must request refunds in writing. Instructions on how to request a refund in writing will be issued if the GSP is renewed with retroactive effect.

Informal Entries

Refunds on informal entries filed through the ABI with the SPI ''A'' designation will be processed in accordance with the automatic refund procedure outlined above.

Baggage declarations and non-ABI informals

When merchandise is presented for clearance, travelers and importers will be advised verbally that they may be eligible for a refund of GSP duties. Travelers/importers desiring such refund should request the Customs Officer to annotate the receipt of payment to indicate that the merchandise would be eligible for GSP duty-free treatment. Then, should the GSP be renewed with retroactive effect, the traveler/importer must request the GSP duty refund in a letter that includes the copy of the receipt of payment and submit the request to the appropriate Customs port of entry.

Mail entries

Should the GSP be renewed with retroactive effect, those addressees who received GSP eligible merchandise (identified on the CF 3419A, (Mail Entry)) may be eligible for a refund of GSP duties and should submit a separate written claim for a refund. The request for the refund and a copy of the CF 3419A should be submitted to the appropriate International Mail Branch identified at the bottom right-hand corner of the CF 3419A. (The copy of the CF 3419A must be included with the request, as the information contained on the form will be the only record of the GSP merchandise entered and whether the duties and fees were paid).

Dated: September 26, 2001.

John H. Heinrich,

Acting Assistant Commissioner, Field Operations.

[FR Doc. 01–24533 Filed 10–1–01; 8:45 am]

BILLING CODE 4820–02–P

DEPARTMENT OF THE TREASURY

Fiscal Service

Surety Companies Acceptable on Federal Bonds: Correction—International Fidelity Insurance Company

AGENCY: Financial Management Service, Fiscal Service, Department of the Treasury.

ACTION: Notice.

SUMMARY: This is Supplement No. 3 to the Treasury Department Circular 570; 2001 Revision, published July 2, 2001, at 66 FR 35024.

FOR FURTHER INFORMATION CONTACT: Surety Bond Branch at (202) 874–6765.

SUPPLEMENTARY INFORMATION: The underwriting limitation for International Fidelity Insurance Company, which was last listed in Treasury Department Circular 570, July 2, 2001 revision at 66 FR 35044 as $3,402,000, is hereby corrected to read $3,600,000, effective today.

Federal bond-approving officers should annotate their reference copies of the Treasury Circular 570, 2001 Revision, at page 35044 to reflect this change. The Circular may be viewed and downloaded through the Internet at *http://www.fms.treas.gov/c570/index.html.* A hard copy may be purchased from the Government Printing Office (GPO), Subscription Service, Washington, DC, telephone (202) 512–1800. When ordering the Circular from GPO, use the following stock number: 769–004–04067–1. Questions concerning this notice may be directed to the U.S. Department of the Treasury, Financial Management Service, Financial Accounting and Services Division, Surety Bond Branch, 3700 East-West Highway, Room 6A04, Hyattsville, MD 20782.

Dated: September 20, 2001.

Wanda J. Rogers,

Director, Financial Accounting and Services Division, Financial Management Service.

[FR Doc. 01–24609 Filed 10–1–01; 8:45 am]

BILLING CODE 4810–35–M

Federal Register

Tuesday,
October 2, 2001

Part II

Environmental Protection Agency

40 CFR Part 52

Approval and Promulgation of Implementation Plans; Arizona—Maricopa County PM–10 Nonattainment Area; Serious Area Plan for Attainment of the 24-Hour PM–10 Standard and Contingency Measures; Proposed Rule

ENVIRONMENTAL PROTECTION AGENCY

40 CFR Part 52

[AZ092–002; FRL–7067–5]

Approval and Promulgation of Implementation Plans; Arizona—Maricopa County PM–10 Nonattainment Area; Serious Area Plan for Attainment of the 24-Hour PM–10 Standard and Contingency Measures

AGENCY: Environmental Protection Agency (EPA).

ACTION: Proposed rule.

SUMMARY: EPA proposes to approve provisions of the *Revised MAG 1999 Serious Area Particulate Plan for PM–10 for the Maricopa County (Phoenix) Nonattainment Area*, February 2000, including the revisions submitted in June 2001 that address attainment of the 24-hour PM–10 national ambient air quality standard. We also propose to grant Arizona's request to extend the Clean Air Act deadline for attaining the 24-hour PM–10 standard in the Phoenix area from 2001 to 2006. Finally, we propose to find that the plan provides for the implementation of contingency measures for both the 24-hour and annual PM–10 standards and to make several revisions to our previous proposal on the MAG plan's provisions for the annual standard and our proposed policy on attainment date extensions for serious PM–10 nonattainment areas.

DATES: Comments on this proposal must be received in writing by November 1, 2001. Comments should be addressed to the contact listed below.

ADDRESSES: Comments should be mailed to: Frances Wicher, Office of Air Planning (AIR–2), EPA Region 9, 75 Hawthorne Street, San Francisco, CA 94105–3901.

A copy of docket No. AZ–MA–00–001, containing the EPA technical support document (EPA TSD) and other material relevant to this proposed action, is available for public inspection at EPA's Region 9 office during normal business hours.

A copy of the docket is also available for inspection at:

Arizona Department of Environmental Quality, Library, 3033 N. Central Avenue, Phoenix, Arizona 85012. (602) 207–2217

Maricopa Association of Governments, 302 North 1st Street, Phoenix, Arizona 85003. (602) 254–6300

Electronic Availability

This document and the Technical Support Document (TSD) are also available as electronic files on EPA's Region 9 Web Page at *http://www.epa.gov/region09/air.*

FOR FURTHER INFORMATION CONTACT: Frances Wicher, Office of Air Planning (AIR–2), U.S. Environmental Protection Agency, Region 9, 75 Hawthorne Street, San Francisco, California 94105. (415) 744–1248, email: wicher.frances@epa.gov.

SUPPLEMENTARY INFORMATION:

Table of Contents

I. Summary of Today's Proposals
II. Background to Today's Proposals
A. PM–10 Air Quality in the Phoenix Area
B. Description of the MAG Plan's Provisions for Attaining the 24-Hour PM–10 Standard
C. Previous Actions on the Phoenix Serious Area PM–10 Plan
1. Annual Standard Proposal
2. Microscale Plan Partial Approval/Partial Disapproval
3. Arizona's Agricultural BMP General Permit Rule Approval
III. The CAA's Planning Requirements for Serious PM–10 Nonattainment Areas
IV. The MAG Plan's Compliance with the CAA's Requirements for Serious PM–10 Nonattainment Areas
A. Completeness of the SIP Submittals
B. Adequacy of the Transportation Conformity Budget
C. Emissions Inventory
D. Adequate Monitoring Network
E. Contribution to PM–10 Exceedances of Major Sources of PM–10 Precursors
F. Implementation of Reasonably Available and Best Available Control Measures
1. Steps 1 and 2: Determination of significant sources
2. Step 3: Identification of potential BACM
3. Step 4: Implementation of RACM and BACM and inclusion of MSM for each significant source category
a. Technology controls for on-road motor vehicle exhaust
b. Transportation control measures (TCMs) for on-road motor vehicle exhaust and paved road dust
c. Nonroad engines
d. Paved road dust
e. Unpaved parking lots
f. Disturbed vacant lands
g. Unpaved roads
h. Construction sites and activities
i. Agricultural sources
j. Residential wood combustion
k. Secondary ammonium nitrate
l. MCESD's commitments to improve compliance and enforcement of its fugitive dust rules
G. Attainment Date Extension
1. Apply for an extension
2. Demonstrate the impracticability of attainment by December 31, 2001
3. Complied with the commitments and requirements in the SIP
4. Include the most stringent measures
5. Demonstrate expeditious attainment
a. Air quality modeling
b. Control measures relied on for attainment
6. Other factors that EPA may consider
a. Nature and extent of nonattainment
b. Types and number of sources or other emitting activities
c. Population exposure to concentrations above the standard
d. Presence and concentration of potentially toxic substances in the particulate
e. Technological and economic feasibility of controls
7. Conclusion on the extension request
H. Reasonable Further Progress and Quantitative Milestones
1. Reasonable further progress
2. Quantitative milestones
I. Contingency Measures
J. General SIP Requirements
V. CAA Requirements for BACM and Attainment Date Extension and EPA's Guidance on Meeting these Requirements
A. Implementation of Best Available Control Measures
B. Extension of the Attainment Date beyond 2001
1. Apply for an attainment date extension
2. Demonstrate that attainment by 2001 is impracticable
3. Complied with all requirements and commitments in its implementation plan
4. Demonstrate the inclusion of the most stringent measures
5. Demonstrate attainment by the most expeditious alternative date practicable
VI. Administrative Requirements

I. Summary of Today's Proposals

First, we propose to approve the provisions in the *Revised MAG 1999 Serious Area Particulate Plan for PM–10 for the Maricopa County Nonattainment Area,* February 2000, (''MAG plan'') including revisions to that plan submitted in *Maricopa County PM–10 Serious Area State Implementation Plan Revision, Agricultural Best Management Practices,* June 2001, (collectively, ''the Maricopa County serious area plan'' or ''the plan'') that address attainment of the 24-hour PM–10 standard.[1] Our proposed actions are based on our initial determination that the Maricopa County serious area plan complies with the Clean Air Act's (CAA) requirements for serious PM–10 nonattainment area plans.

Specifically, we propose to approve the following elements of the plan as they pertain to the 24-hour standard:

- The demonstration that the plan provides for implementation of reasonably available control measures (RACM) and best available control measures (BACM),

[1] There are two separate national ambient air quality standards for PM–10, an annual standardd of 50 μg/m³ and a 24-hour standard of 150 μg/m³. We proposed approval of the MAG plan's annual standard provisions on April 13, 2000 at 65 FR 19964.

• The demonstration that attainment by the CAA deadline of December 31, 2001 is impracticable,

• The demonstration that attainment will occur by the most expeditious alternative date practicable, in this case, December 31, 2006,

• The demonstration that the plan provides for reasonable further progress and quantitative milestones,

• The demonstration that major sources of PM–10 precursors such as nitrogen oxides and sulfur dioxide do not contribute significantly to air quality standard violations, and

• The transportation conformity budget.

Second, we are proposing to grant Arizona's request to extend the attainment date for the 24-hour PM–10 standard from December 31, 2001 to December 31, 2006. We make this proposal based on our determination that the State has met the CAA's criteria for granting such extensions.

Third, we propose to find that the plan provides for the implementation of contingency measures for both the 24-hour and annual standards as required by the CAA.

Finally, we make several revisions to our April 13, 2000 proposed approval of the annual standard provisions in the Maricopa County serious area plan. These revisions involve:

• Clarifications to our proposed policy on granting attainment date extensions under CAA section 188(e),

• Changes to Maricopa County Environmental Services Department's (MCESD) commitments to further improve its fugitive dust rule, Rule 310,

• Changes to several other control measures, and

• Evaluation of the plan's compliance with the BACM requirement and most stringent measure requirement in CAA section 188(e) for the agriculture source category based on the State's Agricultural Best Management Practices General Permit Rule.[2]

This preamble describes our proposed actions on the Phoenix area plan and provides a summary of our evaluation of the plan. Our detailed evaluation of the plan can be found in the technical support document that accompanies this proposal. See ''Technical Support Document, Notice of Proposed Rulemaking on the Serious Area PM–10 State Implementation Plan for the Maricopa County PM–10 Nonattainment Area Provisions for Attaining the 24-Hour Standard and Contingency Measures,'' September 14, 2001 (EPA TSD). The EPA TSD is an integral part of this proposal and should be reviewed prior to making comments. A copy of the EPA TSD can be downloaded from our website or obtained by calling or writing the contact person listed above.

II. Background to Today's Proposals

A. PM–10 Air Quality in the Phoenix Area

The Maricopa County (Phoenix) PM–10 nonattainment area is located in the eastern portion of Maricopa County and encompasses the cities of Phoenix, Mesa, Scottsdale, Tempe, Chandler, Glendale as well as 17 other jurisdictions and considerable unincorporated County lands.[3] 40 CFR 81.303. The area is home to almost 3 million people.

The area violates both the annual and 24-hour PM–10 standards. In 1990, the area was designated nonattainment for PM–10 and classified as moderate. In 1996, because of continuing violations of both PM–10 standards, the area was reclassified to serious and required to submit a serious area plan by December 10, 1997. 61 FR 21372 (May 10, 1996).

The principal contributors to elevated PM–10 levels in the Phoenix area are fugitive dust sources such as construction sites, unpaved roads, vacant lots, agricultural sources, and paved road dust. Also contributing to the PM–10 problem, but to a much lesser degree than fugitive dust, are internal and external combustion sources including directly-emitted PM–10 from automobiles, trucks, construction equipment, buses, residential woodburning and industrial, commercial, and residential use of natural gas and fuel oil. See MAG plan, p. 3–5.

There is a long and complex history to PM–10 air quality planning in the Phoenix area. A summary of this history can be found in the annual standard proposal at 65 FR 19964, 19965. A more detailed history can be found in section 1 of the EPA TSD.

B. Description of the MAG Plan's Provisions for Attaining the 24-Hour PM–10 Standard

Arizona has made several submittals to address the CAA requirements for serious PM–10 nonattainment area plans for the Phoenix area. The provisions for attainming the 24-hour PM–10 standard are found mainly in three of these submittals: the 1997 Microscale plan,[4] the 2000 MAG plan, and the 2001 Best Management Practices (BMP) submittal.[5] The latter two documents are the subject of this proposal and are described in more detail below. We have already acted on the Microscale plan, see 62 FR 41856 (August 4, 1997). We describe this plan and explain its relationship to today's proposal in the next section.

The first submittal is the *Revised Maricopa Association of Governments 1999 Serious Area Particulate Plan for PM–10 for the Maricopa County Nonattainment Area,* February 2000. This plan was developed by the Maricopa Association of Governments (MAG), the lead air quality planning agency in Maricopa County. The Arizona Department of Environmental Quality (ADEQ) submitted this plan as a revision to the Arizona State Implementation Plan (SIP) on February 16, 2000. We refer to this plan in this document as the MAG plan or the revised MAG plan; however, we occasionally use these terms to refer to the set of documents that collectively comprise the Maricopa County serious area PM–10 plan.

The second document is the *Maricopa County PM–10 Serious Area State Implementation Plan Revision, Agricultural Best Management Practices,* (BMP) June 2001, submitted in draft on April 26, 2001 and final on June 13, 2001. This SIP revision was developed by ADEQ. We refer to this submittal as the BMP TSD.

The MAG plan contains a 1994 inventory and uses the urban airshed model/limited chemistry version (UAM/LC) to model regional air quality in 1995 as a base year and in 2006 as the attainment year for both the annual and 24-hour standards. The MAG plan, however, relies primarily on air quality modeling performed in the Microscale plan to evaluate localized 24-hour exceedances.

The MAG plan, as revised by the BMP TSD, includes a BACM analysis and a demonstration that attainment by 2001 is impracticable for both the 24-hour and annual PM–10 standards. It also

[2] Except for these limited number of revisions, we are not reopening the comment period and are not soliciting comments on our April 13, 2000 proposal.

[3] The Maaricopa nonattainment area also includes the town of Apache Junction in Pinal County. Apache Junction is covered by a separate air quality plan and will be addressed in a later action.

[4] The 1997 Microscale plan is the *Plan for Attainment of the 24-hour PM–10 Standard—Maricopa County PM–10 Nonattainment Area,* Arizona Department of Environmental Quality, May, 1997.

[5] The other submittals contain rules and other control measures relied on to provide for RACM, BACM, reasonable further progress an attainment. These submittals include the commitments by local jurisdictions to PM–10 control measures submitted in December 1997, revised MCESD Rules 310 and 310.01 submitted in March 2000, Maricopa County's Residential Wood Burning Ordinance submitted in January 2000, and the Agricultural Best Management Practices (BMP) General Permit Rule submitted in July 2000.

includes, again for both PM–10 standards, the State's request for a five-year extension of the attainment date, a demonstration that the plan includes for the most stringent measures found in other states' plans, and a demonstration of attainment by December 31, 2006.

The BMP TSD updates the MAG plan to reflect the State's adoption of the Agricultural General Permit rule to control PM–10 from agricultural sources in Maricopa County. It includes a background document which provides the BACM demonstration for agricultural sources for both standards, a revised demonstration of attainment and reasonable further progress (RFP) for the 24-hour standard at two monitoring sites, and revisions to the contingency measure provisions for both standards. It also includes documentation quantifying emission reductions from the Agricultural General Permit rule and documentation related to implementing this rule.

C. Previous Actions on the Phoenix Serious Area PM–10 Plan

We have taken three actions related to the Phoenix Serious Area PM–10 plan: the proposed approval of the MAG plan's provisions for the annual standard, the partial approval/ partial disapproval of the 1997 Microscale plan, and the approval of Arizona's Agricultural BMP General Permit rule. With today's proposal, we have now proposed action on all elements of the Maricopa County serious area PM–10 plan.

1. Annual Standard Proposal

On April 13, 2000, we proposed to approve the MAG plan's provisions for attainment of the annual PM–10 standard. See 65 FR 19964.[6] Specifically, we proposed to approve for the annual standard the provisions for implementation of RACM and BACM, the demonstration that attainment by 2001 is impracticable, the demonstration that attainment will occur by the most expeditious alternative date, the RFP demonstration, the quantitative milestones, and the conformity budget. We also proposed to grant an extension of the attainment date from 2001 to 2006 based on our proposed determination that Arizona had met the CAA criteria for granting such an extension.

In April 2000 preamble, we also proposed to approve the base year regional emissions inventory required by CAA section 172(c)(3), MCESD's Rules 310 and 310.01, Maricopa County's Residential Woodburning Ordinance, and the commitments by the cities, towns, and County of Maricopa, ADEQ, MAG, and other State and local agencies to implement various PM–10 control measures. These proposals were applicable to both the annual and 24-hour PM–10 standards and thus are not being repeated today.

2. Microscale Plan Partial Approval/ Partial Disapproval

The attainment demonstration for the 24-hour standard in the Maricopa County serious area plan has both a local modeling component and a regional modeling component. Portions of the local or microscale component are found in the Microscale plan, the 2000 MAG plan, and the BMP TSD. The regional component is contained completely within the 2000 MAG plan.

Most of the technical evaluation for the microscale component is contained in the Microscale plan which was submitted to us in May 1997. It evaluates exceedances of the 24-hour PM–10 standard at four Phoenix area monitoring sites: Salt River, Maryvale, Gilbert, and West Chandler.

This evaluation involved developing local, day-specific inventories and dispersion modeling to determine source contributions to exceedances at each site. The evaluation showed that the primary contributors to 24-hour exceedances in the Phoenix area are local fugitive dust sources such as construction sites, agricultural fields and aprons, vacant lots, unpaved roads and parking lots, and earthmoving operations. The Microscale plan also described the type of controls necessary to show attainment at each site although the plan only assured the implementation of such controls on construction-related sources.

We approved the Microscale plan in part and disapproved it in part on August 4, 1997 (62 FR 41856). We approved the attainment and RFP demonstrations for the Salt River and Maryvale sites because the plan demonstrated expeditious attainment at these sites; however, we disapproved these demonstrations for the West Chandler and Gilbert sites because the plan did not demonstrate attainment at them. Because attainment demonstrations at the Salt River and Maryvale sites were already approved, ADEQ limited its subsequent microscale work to developing approvable demonstrations for the Gilbert and West Chandler sites. Our proposal today is also limited to these two sites.

To evaluate the provisions for the 24-hour PM–10 standard in the MAG plan, we are relying to a large extent on our previous evaluation of the Microscale plan. Except for the findings related to the implementation of BACM, we have not reevaluated the 24-hour standard provisions that we have already found adequate or approved as part of our actions on the Microscale plan.

More information on the Microscale plan can be found in section 1 of the EPA TSD and our proposed and final rulemakings on it. 62 FR 31025 (June 6, 1997) and 62 FR 41856 (August 4, 1997).

3. Arizona's Agricultural BMP General Permit Rule Approval

The analysis done for the Microscale plan revealed for the first time how significant a contribution agricultural sources make to exceedances of the 24-hour PM–10 standard in the Phoenix area. See Microscale plan, pp. 18–19. In order to develop adequate controls for this source, Arizona passed legislation in 1997 establishing an Agricultural Best Management Practices (BMP) Committee and directing the Committee to adopt by rule by June 10, 2000, an agricultural general permit specifying best management practices for reducing PM–10 from agricultural activities. The legislation also required that implementation of the agricultural controls begin by June 10, 2000 with an education program and full compliance with the rule be achieved by December 31, 2001. See Arizona Revised Statutes (A.R.S.) 49–457.

In September 1998, the State submitted the legislation. On June 29, 1999, we approved it as meeting the RACM requirements of the CAA.[7] 64 FR 34726.

While we approved the legislation as RACM, it was the State's intent that it also serve as BACM and MSM for agricultural sources in the serious area

[6] In the annual standard propsoal and in the EPA TSD for today's proposal, we discuss the legal basis for separating the proposed approvals for the 24-hour and annual standards and the practical reasons we chose to do so. See 65 FR 19964, 19969 and section 3 of the EPA TSD. We intent, however, to finalize actions on both standards in a single rulemaking in early 2002.

[7] In 1998, we promulgated a moderate area PM–10 federal implementation plan (FIP) for the Phoenix area. 63 FR 41326 (August 3, 1998). One of the measures in this FIP was our commitment to adopt RCM for agricultural sources, RACM being the primary control requirement for moderate PM–10 nonattainment areas. Arizona submitted the BMP legislation in 1998 as, among other things, a substitute for our FIP RACM commitment. Before we could withdraw our FIP RACM commitment and replace it with the State's legislation, we had to first find that the legislation was at least RACM, hence our initial determination that it was at least RCM. For further information on this legislation and its relationship to the history of PM–10 planning in the Phoenix area, see the ''Implementation of BACM and Inclusion of MSM for Agricultural Sources'' section in the EPA TSD.

PM–10 plan. Therefore, in our annual standard proposal, we evaluated and proposed to find that the legislation met the CAA BACM and MSM requirements for the agricultural source category. 65 FR 19964, 19981.

After a series of meetings during 1999 and 2000, the Agricultural BMP Committee adopted the agricultural general permit rule and associated definitions, effective May 12, 2000, at Arizona Administrative Code (AAC) R18–2–610, ''Definitions for R18–2–611,'' and 611, ''Agricultural PM–10 General Permit; Maricopa PM10 Nonattainment Area'' (collectively, general permit rule). The State submitted the general permit rule in July 2000 and its analysis quantifying the emission reductions expected from the rule and the demonstration that the rule meets the CAA's RACM, BACM and MSM requirements in the June 2001 BMP TSD. We proposed to approve the rule as meeting the CAA requirement for RACM on June 29, 2001 and signed the final approval on September 10, 2001. See 66 FR 34598.

We are today withdrawing our proposed finding in the annual standard proposal that the State legislation provides for the implementation of BACM and MSM for agricultural sources for the annual standard. 66 FR 19964, 19981. In its place we are proposing to find that the General Permit rule provides for the implementation of BACM and MSM for agricultural sources for the annual standard. This proposal is based on our analysis, summarized later, of the rule and the State's demonstrations in the BMP TSD and is in addition to our proposed finding that the rule provides for the implementation of BACM and MSM for the 24-hour standard.

III. The CAA's Planning Requirements for Serious PM–10 Nonattainment Areas

The Phoenix area is a PM–10 nonattainment area that has been reclassified to serious because it failed to attain by the moderate area attainment date of December 31, 1994. Such an area must submit, within 18 months of the reclassification, revisions to its implementation plan that address the CAA requirements for serious PM–10 nonattainment areas. CAA section 189(b)(2). These requirements are:

(a) assurances that the BACM, including best available control technology (BACT) for stationary sources, for the control of PM–10 shall be implemented no later than 4 years after the area is reclassified (CAA section 189(b)(1)(B)); [8]

(b) assurances that BACT on major stationary sources of PM–10 precursors shall be implemented no later than 4 years after the area is reclassified except where EPA has determined that such sources do not contribute significantly to exceedances of the PM–10 standards (CAA section 189(e));

(c) a demonstration (including air quality modeling) that the plan will provide for attainment as expeditiously as practicable but no later than December 31, 2001 or where the State is seeking an extension of the attainment date under section 188(e), a demonstration that attainment by December 31, 2001 is impracticable and that the plan provides for attainment by the most expeditious alternative date practicable (CAA sections 188(c)(2) and 189(b)(1)(A));

(d) quantitative milestones which are to be achieved every 3 years and which demonstrate reasonable further progress toward attainment by the applicable attainment date (CAA sections 172(c)(2) and 189(c)); and

(e) a comprehensive, accurate, current inventory of actual emissions from all sources of PM–10 (CAA section 172(c)(3)).

Serious area plan must also provide for the implementation of contingency measures if the area fails to make RFP or attain by its attainment deadline. These contingency measures are to take effect without further action by the State or the Administrator. CAA section 172(c)(9).

Serious area PM–10 plans must also meet the general requirements applicable to all SIPs including reasonable notice and public hearing under section 110(l), necessary assurances that the implementing agencies have adequate personnel, funding and authority under section 110(a)(2)(E)(i) and 40 CFR 51.280; and the description of enforcement methods as required by 40 CFR 51.111.

We have issued a General Preamble[9] and Addendum to the General Preamble[10] describing our preliminary views on how the Agency intends to review SIPs submitted to meet the CAA's requirements for PM–10 plans. The General Preamble mainly addresses the requirements for moderate areas and the Addendum, the requirements for serious areas.

IV. The MAG Plan's Compliance with the CAA's Requirements for Serious PM–10 Nonattainment Area

The following sections present a condensed discussion of our evaluation of the MAG plan's compliance with the applicable CAA requirements for attaining the 24-hour PM–10 standard. Our complete evaluation is found in the EPA TSD for this proposal. We strongly urge anyone wishing to comment on this proposal to first review the TSD before preparing comments. A copy of the TSD can be downloaded from our website or obtained by calling or writing the contact person listed above.

A. Completeness of the SIP Submittals

CAA section 110(k)(1)(B) requires us to determine if a SIP submittal is complete within 60 days of its receipt. This completeness review allows us to quickly determine if the submittal includes all the necessary items and information we need to take action on it. We make completeness determinations using criteria we have established in 40 CFR part 51, appendix V.

We found ADEQ's February 16, 2000 submittal of the final revised MAG serious area PM–10 plan complete on February 25, 2000. See letter, David P. Howekamp, EPA, to Jacqueline Schafer, ADEQ.

We also found ADEQ's June 13, 2001 submittal of the BMP TSD complete on August 10, 2001. See letter, Jack Broadbent, EPA, to Jacqueline Schafer, ADEQ.

B. Adequacy of the Transportation Conformity Budgets

CAA Section 176(c) requires that federally-funded or approved transportation plans, programs, and projects in nonattainment areas ''conform'' to the area's air quality implementation plans. Conformity ensures that federal transportation actions do not worsen an area's air quality or interfere with its meeting the air quality standards. We have issued a conformity rule that establishes the criteria and procedures for determining

[8] When a moderate area is reclassified to serious, the requirement to implement RACM in section 189(a)(1)(C) remains and is augmented by the requirement to implement BACM. Thus, a serious area PM–10 plan must, in addition to BACM, provide for the implementation of RACM as expeditiously as practicable to the extent that the RACM requirement has not been satisfied in the area's moderate area plan.

[9] ''State Implementation Plans; General Preamble for the Implementation of Title I of the Clean Air Act Amendments of 1990,'' 57 FR 13498 (April 16, 1992) and 57 FR 18070 (April 28, 1992).

[10] ''State Implementation Plans for Serious PM–10 Nonattainment Areas, and Attainment Date Waivers for PM–10 Nonattainment Areas, and Attainment Date Waivers for PM–10 Nonattainment Areas Generally; Addendum to the General Preamble for the Implementation of Title I of the Clean Air Act Amendments of 1990,'' 59 FR 41998 (August 16, 1994)

whether or not transportation plans, programs, and projects conform to a SIP. See 40 CFR part 93, subpart A.

One of the primary tests for conformity is to show transportation plans and improvement programs will not cause motor vehicle emissions higher than the levels needed to make progress toward and meet the air quality standards. The motor vehicle emissions levels needed to make progress toward and meet the air quality standards are set in an area's attainment and/or RFP plans and are known as the ''emissions budget for motor vehicles.'' Emissions budgets are established for specific years and specific pollutants. See 40 CFR 93.118(a).

Before an emissions budget in a submitted SIP revision can be used in a conformity determination, we must first determine that it is adequate. The criteria by which we determine adequacy of submitted emission budgets are outlined in our conformity rule in 40 CFR 93.118(e)(4). A finding of adequacy does not approve an emissions budget, it simply allows states to begin to use the budget in conformity determinations pending our action on the overall SIP.

The MAG plan establishes a mobile source emissions budget of 59.7 mtpd. This regional budget is applicable to both the annual and 24-hour PM–10 standards. The on-road mobile source portion of the budget, which includes emissions from reentrained road dust, vehicle exhaust, and travel on unpaved roads, is 58.6 mtpd. The road construction dust portion of the budget is 1.1 mtpd. MAG plan, p. 8–13.

On March 30, 2000, we found adequate for transportation conformity purposes this motor vehicle emissions budget. Our adequacy finding is documented in section II of the EPA TSD for the annual standard. As a result of our adequacy finding, MAG and the Federal Highway Administration are now required to use this budget in all conformity analyses.

As discussed later in this preamble, we are proposing to approve both the attainment and reasonable further progress demonstrations for the 24-hour standard in the Maricopa County serious area PM–10 plan. The 59.7 mtpd budget is consistent with these demonstrations. We, therefore, propose to approve it as the motor vehicle emissions budget for the 24-hour PM–10 standard under CAA section 176(c).

C. Emissions Inventory

CAA section 172(c)(3) requires that nonattainment area plans include a comprehensive, accurate, and current inventory of actual emissions from all sources in the nonattainment area. To meet this requirement Arizona submitted a 1994 base year inventory as part of the MAG plan. See MAG plan, Appendix A, Exhibit 6. We proposed to approve this inventory as meeting the requirements of section 172(c)(3) in our proposal on the annual standard provisions. See 65 FR 19964, 19970.

In the Phoenix nonattainment area, both regional and microscale modeling inventories are needed to accurately reflect the sources that are contributing to 24-hour PM–10 ambient levels. The regional modeling inventories were derived from the 1994 base year inventory and are the same for the annual and 24-hour standards. We proposed to find these regional modeling inventories to be acceptable as part of annual standard provisions. See 65 FR 19964, 19985–19986.

ADEQ developed microscale and subregional inventories for 1995 (the modeling base year) for the West Chandler and Gilbert microscale sites. See Microscale plan, Appendix A, Chapter 4 and MAG plan, Appendix C, Exhibit 3, Chapter 3. In the 1997 Microscale plan, ADEQ also developed 1995 inventories for the two other microscale sites, Maryvale and Salt River. See Microscale plan, Appendix A, Chapters 4 and 6. We evaluated the 1995 inventories for all four sites as part of our action on the overall Microscale plan. See 62 FR 31025, 31030 (June 6, 1997). These microscale inventories are specialized modeling inventory and is not intended to satisfy the CAA section 172(c)(3) requirement.[11]

We discuss emissions inventories in this preamble and in the EPA TSD in order to present a complete technical review of the Maricopa County serious area plan's provisions for attainment of the 24-hour standard. Emissions inventories play a fundamental role in air quality modeling, and CAA section 189(b)(1)(A) requires attainment demonstrations in PM–10 serious area plan to be based on modeling. We cannot find this modeling, or the attainment demonstrations that are derived from it, approvable without first finding that the underlying emissions inventories are adequate. We are not, however, proposing any actions today on the inventories relied on in the Maricopa County serious area plan for demonstrating attainment of the 24-hour standard because, as discussed above, we have already either proposed to approve them or found them to be acceptable.

[11] The microscale inventories include only sources within a small area surrounding each monitor rather than all sources within the entire nonattainment area as requirement in CAA section 172(c)(3).

D. Adequate Monitoring Network

We discuss the adequacy of the monitoring network in this preamble solely to support our finding that the plan appropriately evaluates the PM–10 problem in the Phoenix area. Reliable ambient data is necessary to validate the base year air quality modeling which in turn is necessary to assure sound attainment demonstrations.

The CAA requires states to establish and operate air monitoring networks to compile data on ambient air quality for all criteria pollutants. Section 110(a)(2)(B)(i). Our regulations in 40 CFR 58 establishes specific regulatory requirements for operating air quality surveillance networks to measure ambient concentrations of PM–10, including measurement method requirements, network design, quality assurance procedures, and in the case of large urban areas, the minimum number of monitoring sites designated as National Air Monitoring Stations (NAMS).

Ambient networks, however, do not need to meet all our regulations to be found adequate to support air quality modeling. A good spatial distribution of sites, correct siting, and quality-assured and quality-controlled data are the most important factors we consider when evaluating the monitoring network for air quality modeling. Nonattainment area plans developed under title I, part D of the Clean Air Act are not, in general, required to address how the area's air quality network meets our monitoring regulations. These plans are submitted too infrequently to serve as the vehicle for assuring that monitoring networks remain current.

The base year for the MAG plan is 1995. In 1995, there were 16 monitoring sites operated by either MCESD or ADEQ that collected PM–10 data in the Phoenix area, three designated as NAMS, five designated as state/local monitoring stations, and eight designated as special purpose monitors. All of the sites were operated in accordance with our regulations in 1995. Figure 3–2 in the MAG plan lists the names of the sites and their locations in the Phoenix area as of April 1999. Most of these PM–10 monitoring sites were sited as neighborhood scale with an objective of assessing population exposure. Given the nature of the emission sources in the Phoenix area, which are mostly local fugitive dust sources, we believe this is an appropriate focus of the network.

The 24-hour attainment demonstration in the MAG plan relies, in part, on showing attainment at four specific monitoring sites. These sites

were chosen to evaluate the type and mix of sources thought to be contributing to elevated 24-hour PM–10 levels: Salt River for its proximity to industrial sources; West Chandler for its nearby highway construction; Maryvale for its residential area coupled with land disturbing activities due to the construction of a park, and Gilbert for its proximity to agricultural land. In 1995 these sites recorded the highest and most frequent exceedances of the 24-hour PM–10 standard. They are also representative of similar areas in the Phoenix area that may not have monitoring sites.

Based on our evaluation, we have concluded that the monitoring network operated by the MCESD and ADEQ in 1995 was adequate to support the air quality modeling in the MAG plan. The network utilized EPA reference or equivalent method monitors and both agencies have EPA-approved quality assurance plans in place.

E. Contribution to PM–10 Exceedances of Major Sources of PM–10 Precursors

CAA section 189(e) requires a state to apply the control requirements applicable to major stationary sources of PM–10 to major stationary sources of PM–10 precursors, unless we determine such sources do not contribute significantly to PM–10 levels in excess of the NAAQS in the area. For the serious area plan, a major source is one that emits or has the potential to emit over 70 English tons per year (tpy) of sulfur oxides (SO_X), nitrogen oxides (NO_X), or ammonium.

PM–10 precursors react in the atmosphere to form secondary particulate, secondary because it is not directly emitted from the source. The MAG plan does not provide specific information on the impact of major precursor sources on Phoenix PM–10 levels; however, it does provide sufficient information on the contribution of total secondary particulates to PM–10 levels and the emissions from major precursor sources to estimate the impact.

We estimate that major stationary sources contribute at most 0.61 μg/m³ to 24-hour PM–10 levels in the Phoenix area. See EPA TSD section, ''BACT for Major Stationary Sources of PM–10 Precursors.'' We estimated this contribution by assuming that the major stationary sources' contribution to secondary levels is proportional to their presence in the inventory. We believe that this assumption is reasonable given the very small presence of major stationary sources in the precursor inventory and the small contribution total secondaries make to PM–10 levels in Phoenix. Moreover, secondary particulate takes hours to form in ambient air from its precursors. By the time secondary particulate is formed, the precursors are well mixed in the ambient air, so localized, disproportionate impacts by major sources of PM–10 precursors are very unlikely.

This contribution is well below our proposed 5 μg/m³ significance level.[12] However, independent of this fact, we believe that so small a contribution—less than 0.4 percent of the 24-hour PM–10 standard of 150 μg/m³—is truly insignificant by any measure for the Phoenix area. PM–10 levels above the 24-hour standard in Phoenix are almost exclusively caused by a few large source categories of fugitive dust. It is controls on these sources that are the key to expeditious attainment and not controls on trivial contributors such as major stationary sources of PM–10 precursors.

Based on their negligible impact on ambient PM–10 levels, we propose to determine that major sources of PM–10 precursors do not contribute significantly to PM–10 levels which exceed the 24-hour standard in the Phoenix area; therefore, pursuant to CAA section 189(e), BACT need not be applied to major sources of PM–10 precursors.

F. Implementation of Reasonably Available and Best Available Control Measures

CAA section 189(b)(1)(B) requires that a serious area PM–10 plan provide for the implementation of BACM within four years of reclassification to serious. For Phoenix, this deadline is June 10, 2000. Under our applicable guidance, BACM must be applied to each significant area-wide source category. Addendum at 42011. As discussed in section V of this preamble, we have established a four-step process for evaluating BACM in serious area PM–10 plans.

1. Steps 1 and 2: Determination of Significant Sources

The first step in the BACM analysis is to develop a detailed emissions inventory of PM–10 sources and source categories that can be used in modeling to determine their impact on ambient air quality. Addendum at 42012. The second step is use this inventory in air quality modeling to evaluate the impact on PM–10 concentrations over the standards of the various sources and source categories to determine which are significant.

The development of the detailed emissions inventories is discussed in a preceding section. The MAG plan uses three modeling studies of PM–10 sources in the Phoenix area to identify significant source categories. One of these studies evaluated significant sources using chemical mass balance (CMB) modeling performed on monitoring samples collected at 6 sites in 1989–1990. The two other studies evaluated significant sources using dispersion modeling of sources around 6 monitoring sites using data from 1992 through 1995.[13]

From these evaluations, the MAG plan identifies 8 significant source categories and 12 insignificant source categories. MAG plan, p. 9–6.

The final list of significant source categories in the MAG plan does not distinguish between those categories that are significant for the 24-hour standard and those that are significant for the annual standard; although previous studies have shown that some source categories are significant only for one or the other standard. Because the MAG plan does not distinguish significant source categories between the two standards, we treat each of the listed significant source categories as significant for the 24-hour standard.

For the 24-hour standard, the MAG plan demonstrates that its selection of significant source categories is appropriate by showing that controls on the de minimis source categories would not result in attainment of the 24-hour standard by 2001. For a detailed description of this demonstration, see MAG plan, pp. 9–12 to 9–15 and the EPA TSD section ''BACM Analysis—Step 2, Model to Identify Significant Sources.''[14]

[12] The MAG plan demonstrates that the 5μg/m³ is the appropriate level for determining which categories are significant for the BACM requirement for the 24-hour standard; therefore, we believe that it is an appropriate level for us to adopt here.

[13] These studies are ''The 1989–90 Phoenix PM–10 Study'', Desert Research Institute, April 1991; ''Particulate Control Measure Feasibility Study,'' Sierra Research, January 1997; and the Microscale plan.

[14] In this de minimus demonstration, certain source categories vacant land, unpaved roads, agricultural sources, and unpaved parking—were assumed to be uncontrolled at the end of 2001. See MAG plan, Tables 9–b and 9–c. These categories will in fact be subject to BACM by then. By not including controls on these categories in the de minimis demonstration, the gap between nonattainment and attainment of the 24-hour standard in 2001 is much larger than it should be and thus, the de minimis determination for the 24-hour standard is suspect.

To check if the selected de minimis categories are truly de minimis under the correct control assumptions, we redid the determination incorporating the appropriate level of control for each source category. We concluded from this reanalysis that the MAG plan's selected de minimis threshold is in fact appropriate and the identified

Continued

The 8 significant source categories are:

1. Paved road travel
2. Unpaved road travel (includes unpaved parking lots)
3. Industrial paved road travel (paved and unpaved)
4. Construction site preparation (includes disturbed vacant lots that are not undergoing construction)
5. Agricultural tilling (includes all agricultural sources)
6. Residential wood combustion
7. On-road and non-road motor vehicle exhaust
8. Secondary ammonium nitrate MAG Plan, Table 9–1.

The 12 de minimis source categories are:

1. Stationary point sources
2. Fuel combustion (excluding residential wood combustion)
3. Waste/open burning
4. Agricultural harvesting
5. Cattle feedlots
6. Structural/vehicle fires
7. Charbroiling/frying meat
8. Marine vessel exhaust
9. Airport ground support exhaust
10. Railroad locomotive exhaust
11. Windblown from fluvial channels
12. Wild fires

MAG plan, Table 9–a. The plan notes that several de minimis source categories (e.g., stationary point sources, waste/open burning, agricultural harvesting, charbroiling) are already subject to control or will be controlled in the future. MAG plan, p. 9–12.

We propose to find that the MAG plan has not excluded any source categories that should be considered significant from its list of significant source categories. The plan presents acceptable modeling to evaluate the impact of various PM–10 sources and source categories on PM–10 levels and to derive a comprehensive and conservative list of significant source categories.

2. Step 3: Identification of Potential BACM

In preparing the list of candidate BACM, MAG reviewed our guidance documents on BACM, other EPA documents on PM–10 control, as well as PM–10 plans from other serious PM–10 nonattainment areas in the western United States. MAG also evaluated controls proposed during public comment. MAG plan, pp. 9–24 through 9–29; MAG Plan, Appendix D, Exhibit 1, ''Response to Public Comments, January 31, 2000 Public Hearing''; and BMP TSD, pp. 9 through 27.

The MAG plan appropriately screened the list of candidate BACM to eliminate measures that did not apply to significant source categories in the area, were technologically infeasible for the area because they would not reduce PM–10 emissions, or duplicated other measures on the list. The plan also provides cost effectiveness estimates for each of the candidate BACM. MAG plan, pp. 9–30 through 9–39; and BMP TSD, pp. 9 through 27.

We propose to find that the Maricopa County serious area PM–10 plan identified and evaluated potential BACM for the Maricopa area consistent with our guidance. As we will discuss below in our evaluations of the implementation of BACM for each significant source category, we do not believe that the plan left out any candidate BACM. Overall, the plan presents one of the most comprehensive lists of potential BACM ever produced.

3. Step 4: Implementation of RACM and BACM and inclusion of MSM for Each Significant Source Category

In the following sections, we review the results of the Maricopa County serious area plan's BACM analysis. To present these results, we have grouped the emission generating activities that comprise the MAG plan's significant categories slightly differently from the plan, e.g., we have addressed separately construction activities and disturbed vacant lands which are both included in the MAG plan's significant category of construction site preparation.[15] We have done this to make our evaluations of the plan's provisions for the implementation of BACM and inclusion of MSM clearer and thus, we believe, more understandable. However, despite the method of presentation, we have addressed the MAG plan's provisions for implementing RACM and BACM for each of the plan's significant source categories.

Also, because of the substantial overlap in the source categories and controls evaluated for BACM and those evaluated for MSM, we present our evaluation of the MAG plan's provisions for including MSM alongside our evaluation of the provisions for implementing RACM and BACM for each significant source category.

Controls on a number of significant source categories are in MCESD's fugitive dust rules, Rule 310 and Rule 310.01. MCESD has made extensive commitments to improve compliance and enforcement of these rules to assure that they achieve the emission reductions necessary for expeditious attainment. These commitments are an important component of our proposed finding that the MAG plan provides for implementation of RACM and BACM and inclusion of MSM. We discuss them at the end of this section.

As discussed above, the MAG plan made no distinction between significant sources for the annual standard and those for the 24-hour standard and, as a result, it made no distinction between BACM and MSM for the annual standard and those for the 24-hour standard. We have already extensively reviewed the MAG plan's BACM and MSM provisions for the annual standard and these reviews are applicable to the 24-hour standard. Thus, except for clarifying and/or updating information on a few measures, we have not revised our evaluations of BACM and MSM for most of the significant source categories. Four categories—on-road engines (technology controls), nonroad engines, unpaved roads and construction dust—have undergone moderate changes.

Our analysis of the agricultural source category has changed substantially from the annual standard proposal. As discussed above, we based our review in the annual standard proposal on the State's legislation requiring the adoption of measures for agriculture. Since then, the State has adopted the agricultural general permit rule and has submitted revisions to the Maricopa County serious area plan containing the demonstration that the general permit rule represents BACM and MSM. For today's proposal, we have based our review of BACM and MSM for the agricultural sources on the general permit rule and the State's additional documentation. Our revised analysis applies to both the annual and 24-hour standards.

a. Technology Controls for On-road Motor Vehicle Exhaust

This category includes tailpipe and tire wear emissions of primary PM–10 from on-road motor vehicles. On-road motor vehicles include both gasoline and diesel-powered passenger cars, light, medium, and heavy duty trucks, buses, and motorcycles.

The suggested technology-based measures for controlling emissions from on-road motor vehicle exhaust fall into one of five categories: new emission standards, inspection and maintenance (I/M) programs, fuels, programs to encourage alternative fueled vehicle usage, and programs to accelerate fleet

de minimis categories are indeed de minimis and are appropriately excluded from the BACM analysis. See EPA TSD, section ''BACM Analysis—Step 2, Model to Identify Significant Sources.''

[15] MAG plan uses this grouping despite the fact that disturbed vacant lands include lands that are disturbed for reasons other than construction activity.

turnover. In total, the MAG plan considers 22 technology-based control measures. See MAG plan, Table 5–2. We believe this list is complete and propose to find that the MAG plan evaluates a comprehensive set of potential technology-based controls for on-road motor vehicle exhaust emissions including the potentially most stringent measures from other states.

For gasoline vehicles, Arizona has implemented one of the nation's best and most comprehensive enhanced I/M programs including expanding the program to areas surrounding Phoenix; has adopted its own Cleaner Burning Gasoline program which mandates the use of either Phase II federal reformulated gasoline or California reformulated gasoline; and mandates federal, state, county, and municipal governments to convert their fleets to alternative fuels. MAG plan, pp. 7–2 through 7–24.

Arizona has instituted a heavy-duty diesel I/M program, will require pre-1988 HDDV registered in the Phoenix nonattainment area to meet 1988 federal emission standards starting in 2004, has established a voluntary vehicle repair and retrofit program to encourage retrofitting and overhaul of heavy duty diesel engines to reduce emissions, and has limited diesel sulfur content to 500 parts per million (ppm). MAG plan, Chapter 7.

As noted before, Arizona has in place a comprehensive programs to address on-road motor vehicle emissions. With the additional measures in the MAG plan (including a more stringent diesel I/M program and measures both encouraging and requiring diesel fleet turnover), the overall mobile source program is strengthened and goes beyond the existing program. Both strengthening and expanding existing programs are key criteria for demonstrating the implementation of BACM. See Addendum at 42013. Where the MAG plan has rejected potential BACM, it provides a reasoned and acceptable justification for the rejection. See EPA TSD, Table ORM–3 in the section ''Implementation of BACM and MSM for On-Road Motor Vehicle Exhaust and Paved Road Dust (Technology Standards and Fuels).''

The MAG plan identified just a few measures from other areas as potential MSM. These measures have either been adopted or we have concluded that the measure need not be included to assure the inclusion of MSM.

The California Air Resources Board's diesel fuel standards (CARB diesel) is one of the few identified motor vehicle controls not adopted by the State.[16] The plan identifies this measure as a potential MSM. MAG plan, Table 10–7. The MAG plan claims that the measure is unreasonable on a cost basis. MAG plan, p. 9–46.

Based on information in the Microscale plan, emissions from on-road motor vehicle are not implicated in 24-hour exceedances in the Phoenix area. Microscale plan, pp. 17–19. All currently available evidence is that 24-hour exceedances are caused by local fugitive dust sources and controls on these sources alone will result in the earliest practicable date for attainment of the 24-hour PM–10 standard in the Phoenix area. Microscale plan, pp. 17–19. Because implementation of CARB diesel would not result in earlier attainment and thus unnecessary for expeditious attainment, we propose to find that the MAG plan provides for the inclusion of MSM to our satisfaction absent the adoption and implementation of CARB diesel.

Except for one, all the adopted BACM and MSM were implemented by June 10, 2000, the BACM implementation deadline for the Phoenix area. The exception is the requirement that pre-1988 heavy duty diesel vehicles registered in the nonattainment area meet 1988 federal emission standards. This measure will not be fully implemented until January 1, 2004 in order to provide sufficient lead time for modification or replacement of the non-complying heavy duty diesel vehicles.

We, therefore, propose to find that the combination of on-road motor vehicle technology controls and transportation control measures (described in the next section) in the MAG plan provides for the implementation of RACM and BACM and the inclusion of MSM for on-road motor vehicle exhaust for the 24-hour standard.

Since the annual standard proposal was published in April 2000, changes have been made to two on-road motor vehicle controls that were included in that proposal: the remote sensing (RSD) program in the State's vehicle emissions inspection program (VEIP) and changes to the State's incentives for purchase of alternatively-fueled vehicles or conversions to alternatively-fueled vehicles.

In 2000, the Arizona legislature converted the RSD program from a regulatory program to a pilot program because of its high cost per ton of emissions reduced [17] In July 2001, Arizona submitted a SIP revision that included all changes to State's VEIP program that had been made since we last approved it in 1995, including the changes to the RSD program. 2001 I/M SIP submittal, p. 26. We consider this I/M program submittal to be Arizona's current statement of what elements constitute its VEIP.

The RSD program is not credited in the RFP or attainment demonstrations for the annual standard. The State justifies its revision to this program based on the implementation cost of the unrevised program, that is, they have determined that the unrevised program was economically infeasible. We believe that this change to the overall on-road motor vehicle control program in the MAG plan do not adversely affect our previously proposed finding that the plan provides for the implementation of RACM and BACM and the inclusion of MSM for this source category for the annual standard found at 65 FR 19964, 19972.

b. Transportation Control Measures (TCMs) for On-road Motor Vehicle Exhaust and Paved Road Dust

TCMs can reduce PM–10 emissions in both the on-road motor vehicle exhaust and paved road dust source categories by reducing vehicle miles traveled (VMT) and vehicle trips (VT). They can also reduce vehicle exhaust emissions through relieving congestion. Our serious area PM–10 guidance requires that plans identifying on-road motor vehicles as a significant sources must also evaluate the TCMs listed in section 108(f) of the CAA. Addendum at 42013.

In our review, we have primarily assessed the MAG plan's provisions for implementing RACM and BACM and including MSM through TCMs based on the measures' effectiveness in controlling directly-emitted PM–10 from vehicle exhaust. We have not assessed the plan based on the TCMs' potential benefit in controlling PM–10 precursors such as NO_X and SO_X because (1) from available ambient measurements, neither nitrates nor sulfates are important to overall 24-hour PM–10 concentrations in the Phoenix area (See EPA TSD section, ''BACT for Major Stationary Sources of PM–10 Precursors'' which shows that total

[16] Arizona has already adopted half of the CARB diesel standards, the 500 ppm sulfur limit. The other CARB diesel standard is a limit on the aromatic hydrocarbon content of no more than 10 percent by volume. CARB, Fact Sheet on California Diesel Fuel, March 1997. Also, in January 2001, we established a new diesel fuel sulfur limit of 15 ppm as part of our overall program to control emissions from heavy duty diesel vehicles. They new limit which will apply to Arizona will be fully in place by September, 2006. 66 FR 5002 (January 8, 2001).

[17] ADEQ, Final Arizona State Implementation Plan Revision, Basic and Enhanced Vehicle Emissions Inspection/Maintenance Program, June 2001 (''2001 I/M SIP submittal''), p. 26.

secondary particulates from all sources have a maximum impact of 9.2 μg/m³ in 1995) and (2) Arizona has already targeted mobile source NO_X and SO_X through an aggressive set of mobile source controls which we believe cover the implementation of RACM and BACM and inclusion of MSM requirements for tailpipe NO_X and SO_X. See discussion immediately above on technology controls for on-road motor vehicle exhaust.

In total, the MAG plan identifies 19 TCMs for consideration, including the CAA section 108(f) measures. The plan does not identify any potential most stringent TCMs from other areas. See EPA TSD section ''Implementation of BACM and MSM for On-Road Motor Vehicle Exhaust and Paved Road Dust (TCMs).'' We believe that this list is complete and propose to find that the MAG plan evaluates a comprehensive set of potential TCMs for on-road motor vehicle exhaust emissions and the potential MSM from other States.

Arizona has a long history of adopting and then enhancing programs to reduce emissions from on-road motor vehicles by reducing VMT, VT, and/or congestion.[18] The area has an employer trip reduction ordinance which applies to employers of 50 or more, a public outreach program to encourage people to reduce driving, programs to improve bicycling and pedestrian travel, and an extensive program to synchronize traffic lights. In most instances, these programs were adopted and implemented as part of carbon monoxide and ozone control programs, but they also reduce PM–10.

With the additional measures in the MAG plan (including additional traffic light synchronization, transit improvements, and bicycle and pedestrian facility improvements), the overall TCM program is strengthened and goes beyond the existing program. See EPA TSD, Table TCM–3 in section ''Implementation of BACM and MSM for On-Road Motor Vehicle Exhaust and Paved Road Dust (TCMs).'' Both strengthening and expanding existing programs are key criteria for demonstrating the implementation of BACM. See Addendum at 42013. Where the MAG plan has rejected potential BACM, it provides a reasoned and acceptable justification for the rejection.

All the adopted TCM BACM were implemented by June 10, 2000, the BACM implementation date for the Phoenix area, or have on-going implementation schedules because they are part of an on-going capital improvement program (e.g., signal synchronization).

We propose to find that the combination of on-road motor vehicle technology controls (described in the previous section) and TCMs in the MAG plan provides for the implementation of RACM and BACM and inclusion of MSM for on-road motor vehicle exhaust. We also propose to find that the combination of TCMs and paved road dust measures (described in the paved road section later in this preamble) provides for the implementation of RACM and BACM and the inclusion of MSM for paved road dust.

c. Nonroad Engines

The nonroad engine category covers a diverse collection of engines, equipment and vehicles fueled by gasoline, diesel, electric, natural gas, and other alternative fuels, including outdoor power equipment, recreational equipment, farm equipment, construction equipment, lawn and garden equipment, and marine vessels.

The suggested measures for controlling emissions from nonroad engines fall into one of four categories: new emission standards, programs to accelerate fleet turnover, programs affecting usage, or fuels. In total, the MAG plan evaluates 8 measures in addition to clean fuels measures for reducing PM–10 emissions from nonroad engines. We believe that this list is complete and propose to find that the MAG plan evaluates a comprehensive set of potential measures for nonroad engines including the potential most stringent measures from other States.

We have adopted national emission standards for a broad range of nonroad engines. We consider that these standards, which apply to nonroad engines sold in Arizona constitute at minimum a RACM-level program for controlling emissions from nonroad engines. The CAA preempts all states, except for California, from setting independent nonroad emission standards. CAA section 209(e). Other states, however, may adopt regulations identical to California's regulations, provided they notify us and give appropriate lead time, 2 years, for implementation. CAA section 209(e)(2)(B).

Arizona legislation allows ADEQ to adopt certain California nonroad engine standards. MAG plan, p. 7–42. ADEQ originally committed to adopt these California nonroad standards; however, subsequently, we adopted federal nonroad engine standards that will achieve essentially the same PM–10 reductions in the Phoenix area that adoption of the California ones would. As a result, Arizona determined that adoption of the California standards would not justify the resources ADEQ would need to expend to adopt, implement, and enforce them and has now withdrawn its commitment. See letter, Jacqueline E. Schafer, ADEQ, to Laura Yoshii, EPA, ''Justification for not implementing CARB Off-road engine standards for the Maricopa County PM–10 SIP,'' September 7, 2001 (''ADEQ Off-Road Letter'').

Arizona has adopted and implemented a year-round Cleaner Burning gasoline program and limits on the sulfur content of diesel fuels. With the addition of these measures, the overall nonroad engine program is strengthened and goes beyond the existing federal program. See EPA TSD section ''Implementation of BACM and Inclusion of MSM for Nonroad Engines.'' Both strengthening and expanding existing programs are key criteria for demonstrating the implementation of BACM. See Addendum at 42013. Where the MAG plan has rejected potential BACM, it provides a reasoned justification for the rejection.

The MAG plan identifies CARB diesel as a potential MSM for nonroad engines but does not adopt it. MAG plan, Table 10–7. The plan identifies this measure as a potential MSM. MAG plan, Table 10–7. The MAG plan claims that the measure is unreasonable on a cost basis. MAG plan, p. 9–46.

Based on information in the Microscale plan, emissions from nonroad engines are not implicated in 24-hour exceedances in the Phoenix area. Microscale plan, pp. 17–19. All currently available evidence is that 24-hour exceedances are caused by local fugitive dust sources and controls on these sources alone will result in the earliest practicable date for attainment of the 24-hour PM–10 standard in the Phoenix area. Microscale plan, pp. 17–19. Because implementation of CARB diesel would not result in earlier attainment and thus unnecessary for expeditious attainment, we propose to find that the MAG plan provides for the inclusion of MSM to our satisfaction absent the adoption and implementation of CARB diesel.

We, therefore, propose to find that MAG plan provides for the implementation of RACM and BACM and inclusion of MSM for nonroad engines.

d. Paved Road Dust

Paved road dust is the largest source of PM–10 in the Maricopa area. It is fugitive dust that is deposited on a

[18] These plans include the MAG moderate and serious area carbon monoxide plans and MAG moderate area ozone plan.

paved roadway and then is re-entrained into the air by the action of tires grinding on the roadway. Dust is deposited on the roadway from being blown onto the road from disturbed areas; tracked onto the road from unpaved shoulders, unpaved roads, or other unpaved access points; stirred up from unpaved shoulders by wind currents created from traffic movement; spilled onto the road by haul trucks; and carried onto the road by water runoff or erosion.

The suggested measures for controlling emissions from paved road dust fall into one of three categories: reductions in VMT and VT, preventing deposition of material onto a roadway, and cleaning material off the roadway. We have already discussed measures for reducing VMT and VT in the section on TCMs above.

The MAG plan lists several potential BACM for paved road dust. It also lists a number of potential MSM from other areas. We believe these lists are complete and propose to find that the MAG plan evaluates a comprehensive set of potential controls for paved road dust including the potential MSM from other States.

Prior to the MAG plan, the cities and towns in the Phoenix area and Maricopa County implemented a number of measures addressing paved road dust. See MAG plan, Table 10–5. With the additional measures in the MAG plan (described below), the overall control program to reduce paved road dust is both strengthened and expanded beyond the existing program. See EPA TSD section ''Implementation of BACM and Inclusion of MSM for Paved Road Dust.'' Both strengthening and expanding existing programs are key criteria for demonstrating the implementation of BACM. See Addendum at 42013.

For the potential MSM, the MAG plan shows that these measures are either adopted or are not in fact more stringent than existing Phoenix area programs.

With the exception of the PM–10-efficient street sweepers measure described below, all the adopted BACM for paved roads were implemented by June 10, 2001, the BACM implementation deadline for the Phoenix area, or have on-going implementation schedules because they are part of an on-going capital improvement program, e.g., curbing. For the reasons discussed below, we propose to find that the MAG plan provides for the implementation of the PM–10 efficient street sweeper measures, a MSM, as expeditiously as practicable, consistent with our proposed MSM policy.

We, therefore, propose to find that the MAG plan provides for the implementation of RACM and BACM and for the inclusion of MSM for paved road dust.

Preventing Deposition of Material Onto a Roadway

Measures aimed at preventing track out on a paved road include treating unpaved access points, preventing track out from construction/industrial sites, treating shoulders on paved roads, controlling emissions during material transport (e.g., truck covers, freeboard requirements), and preventing erosion onto paved roads.

The MAG plan includes each of these measures.

Unpaved access points: In the MAG moderate area plan, local jurisdictions focused on requiring new connections to public paved streets to be paved. MAG plan, p. 9–74. In the serious area plan, the focus has shifted to addressing existing unpaved access points in addition to preventing new unpaved access points while maintaining the previous programs. Most public entities committed to stabilize unpaved access points when a connecting road is built, improved or reconstructed. See, for example, Glendale Commitment, ''Reduce Particulate Emissions from Unpaved Shoulders and Unpaved Access Points on Paved Roads.'' Some cities have made explicit commitments for stabilizing existing access points without this prerequisite, such as Gilbert and Mesa. We also anticipate that routine city/town/County road paving and stabilization projects will result in controlling a number of existing unpaved access points. These projects combined with increased enforcement of track-out restrictions and additional PM–10 efficient street sweeping efforts should reduce paved road emissions attributable to unpaved access points.

The only potential MSM that the MAG plan identifies for unpaved access points are track out control requirements for construction sites. See MAG plan, Table 10–7. We discuss these measures in the next section.

Track out. MCESD Rule 310, sections 308.2(c) and 308.3 address dirt track out from construction/industrial sites requiring all work sites that are five acres or larger and all work sites where 100 cubic yards of bulk materials are hauled on-site or off-site each day to control and prevent track out by installing a track out control device. The rule also requires all work sites to clean up spillage or track out immediately when it extends a cumulative distance of 50 linear feet or more and, where track out extends less than 50 feet, to clean it up at the end of the work day.

The MAG plan identifies, as a potential MSM for track out, South Coast (Los Angeles area) Air Quality Management District's (South Coast AQMD) Rule 403. MAG plan, Table 10–7. The plan concludes that the two rules are reasonably similar in several respects, and where differences exist, the relative impacts on control roughly balance each other out. MSM Study, p. C–4.[19] We agree. Both rules emphasize prevention and rapid removal of track out. See EPA TSD section ''Implementation of BACM and Inclusion of MSM for Paved Roads Dust,'' Note 2.

Unpaved Road Shoulders. As with unpaved access points, the MAG plan demonstrates a shift to dealing with existing unpaved shoulders from simply preventing new ones. MAG plan, Table 9–11. Maricopa County has committed to treat 100 miles of shoulders along existing paved arterial and collector roadways with high volume truck traffic by 2003, in addition to its annual capital improvement projects for paving or treating unpaved shoulders. Maricopa County commitment, 1999 revised measure 5. Other jurisdictions have also made commitments to treat shoulders. The commitments are set depending on the resources available to each jurisdiction to implement them.

A.R.S. 9–500.04(3) and 49–474.01(4), adopted by the State legislature in 1998, require the cities, towns and County of Maricopa to develop and implement plans to stabilize targeted unpaved roads and alleys and to stabilize unpaved shoulders on targeted arterials beginning January 1, 2000. Although this legislation does not specify how many shoulder miles to be controlled, we believe that the local jurisdictions' efforts to meet this new legislation will result in the control of unpaved shoulders where it is most needed.

Material Transport. Requirements for the control of PM–10 emissions during material transport are found in MCESD Rule 310, sections 308.1 and 308.2. When hauling material off-site onto paved public roadways, sources are required to: 1) load trucks such that the freeboard is not less than three inches; 2) prevent spillage; 3) cover trucks with a tarp or suitable enclosure; and 4) clean or cover the interior cargo compartment before leaving a site with an empty truck.

The MAG plan identifies requirements for bulk material transport

[19] The ''MSM Study'' is the ''Most Strigent PM–10 Control Measure Analysis,'' Sierrra Research, May 13, 1998 found in Appendix C, Exhibit 4 of the MAG plan.

in Imperial County (California) Regulation VIII as a potential MSM. MAG plan, Table 10–7. The plan concludes that MCESD's rule is equally stringent. We agree because Rule 310's requirements for bulk material transport/hauling are essentially the same as Imperial County's requirements.

Cleaning Material Off the Roadway

Measures for cleaning material off roadways are track out, erosion, and spill removal requirements and road sweeping.

The MAG plan includes each of these measures:

Material spillage, erosion, or accumulation. MCESD Rule 310, section 308.2 and 308.3 address rapid clean up of track out from construction/industrial sites. Rule 310.01, section 306 requires property owners/operators to remediate erosion-caused deposits of bulk materials onto paved surfaces. Erosion-caused deposits are to be removed within 24 hours of their identification or prior to resumption of traffic on the pavement.

The MAG plan identifies South Coast AQMD's Rule 1186 and Mojave Desert (San Bernadino, California) AQMD's Rule 403 as potential MSMs for material spillage, erosion, and accumulation onto roadways. MAG plan, Table 10–7. In both cases, the plan concludes that MCESD's rules are more stringent. We agree. MCESD's rules require the clean up of more incidences of spillage, etc. than does either the South Coast or Mojave Desert rule. See EPA TSD, ''Implementation of BACM and Inclusion of MSM for Paved Roads,'' Note 5.

Street sweeping. Most cities/towns and the County have on-going street sweeping programs with variable sweeping frequencies. With some exceptions, public entities implementing this measure have not explicitly committed to increase their existing sweeping frequencies. Phoenix, for example, approved a program in 1996 to increase the frequency of residential street sweeping to match the uncontained trash pick-up schedule. Phoenix commitment, measure 97–DC–5. However, sweeping frequency is appropriately evaluated in combination with other paved road measures because the emission-reducing potential of increased sweeping frequency is closely associated with other factors. These factors include whether the sweepers currently in use are PM–10 efficient (such that the act of sweeping does not cause increased emissions) and whether the public entity has identified roads that tend to experience higher silt loadings where more frequent sweeping is likely to make an appreciable difference in PM–10 emissions. Because sweeping frequency is among the criteria included in MAG's PM–10 efficient street sweeper solicitation (see below), we believe this measure is largely incorporated into MAG's new program.

The MAG plan identifies as a MSM the PM–10 efficient street sweeping provisions in South Coast Rule 1186. MAG plan, Table 10–7. However, the plan's analysis pre-dates MAG's commitment for the purchase and distribution of PM–10 efficient street sweepers and is no longer current.

The MAG plan includes commitments by MAG, cities, towns and the County for the purchase and use of PM–10 efficient street sweepers. This commitment involves the allocation of $3.8 million in Congestion Mitigation and Air Quality (CMAQ)[20] funds for the FY 2000–2004 Transportation Improvement Program (TIP) to purchase PM–10 certified street sweepers for the local jurisdictions to use. MAG has recommended an additional $1.9 million in CMAQ funds be allocated to purchase PM–10 certified street sweepers in the FY 2001–2005 TIP. See MAG commitment, ''PM–10 Efficient Street Sweepers.''

The funds allocated by MAG for this program should be sufficient to replace approximately two-thirds of the 72 existing city/town/County street sweepers.[21] Each fiscal year in which CMAQ funds are allocated for street sweepers, MAG will solicit requests for funding from cities, towns and the County in the PM–10 nonattainment area. Funding requests must identify by facility type (i.e. freeway, arterial/collector, local) the number of centerline miles to be swept with the PM–10 certified units, expected frequency of sweeping, and average daily traffic (if available).[22] MAG will use this information to estimate the emission reductions associated with each sweeper request and rank the requests in priority order of effectiveness for consideration in the allocation of CMAQ funds. See MAG commitment, ''PM–10 Efficient Street Sweepers.''

In evaluating this program, we considered not only the number of PM–10 efficient street sweepers to be purchased and distributed, but whether the program incorporates use factors that influence emissions reductions. The greatest emissions reduction benefit for this mitigative measure will be achieved if the sweepers are used on a frequent basis on-roads with high silt loadings or significant visible accumulations.

Each public entity has a monetary incentive to compete for the PM–10 efficient street sweepers, as the program is funded by MAG with a low cost share (5.7 percent) requirement. Also, the new street sweepers will either replace existing city-owned street sweeping equipment or contracted out services, or be added to existing street sweeper equipment/services. MAG's selection process includes PM–10 emissions reduction potential, based on the types of roads each jurisdiction is targeting for sweeping and how frequently they will be swept. This data will assist MAG in distributing the street sweepers to local jurisdictions in a way that maximizes the regional air quality benefits of the program. In addition, when the cities/towns/County are awarded PM–10 efficient street sweepers, their submittals will incorporate use factors that maximize emission reductions from this measure.

We believe that implementation of the PM–10 efficient street sweeper program will be implemented as expeditious as practicable. The funding necessary to purchase this equipment is available only over the course of several fiscal years and the purchase of the PM–10 efficient street sweepers can only proceed at the rate these funds become available.

South Coast's Rule 1186 requires any government or government agency which contracts to acquire street sweeping equipment or services for routine street sweeping on public roads that it owns and/or maintains, where the contract date or purchase or lease date is January 1, 2000 or later, to acquire or use only certified street sweeping equipment. The rule establishes street sweeper testing and certification procedures. Unlike Maricopa's strategy, Rule 1186 requires that PM–10 efficient street sweepers be used whenever street sweeping is contracted out as of January 2000, and it requires public agencies to replace their existing street sweeping equipment with PM–10 efficient equipment only as they replace existing equipment.

MAG's PM–10 efficient street sweeper program is being funded over the next 4 to 5 fiscal years, which may result in a greater number of street sweepers being purchased and placed in

[20] CMAQ funds are federal transportation funds awarded to certain nonattainment areas for congestion management of air quality-transportation projects such as paving unpaved roads.

[21] Some street sweepers may be additions to, as opposed to replacements of, existing equipment.

[22] See MAG, ''Methodology for Evaluating Congestion Mitigation and Air Quality Improvement Projects,'' Draft Revised, June 21, 2001, pp. 18–22.

operation in a shorter time frame than could be expected using South Coast's natural attrition approach. While it is possible that some cities/towns in Maricopa may continue to contract out for street sweeping services where PM–10 efficient sweepers may not be used, most do not contract for street sweeping. Furthermore, due to the fact that public entities will be competing for PM–10 efficient street sweepers funded by CMAQ dollars with only a low cost share requirement, we believe that the already limited reliance on contracted out services in Maricopa County will be reduced as new PM–10 efficient equipment becomes available and that contractors will switch to PM–10 efficient equipment to meet new demand. In addition, MAG's program ensures that the cities/town/County develop plans for how the street sweepers will be used to maximize their emissions reduction potential. We, therefore, believe that overall the Maricopa program is equivalent to South Coast's Rule 1186.

e. Unpaved Parking Lots

This category includes emissions from re-entrained road dust from vehicle traffic on unpaved parking lots and windblown dust entrained from the disturbed surface of unpaved parking lots.

There are two principal ways to control emissions from unpaved parking lots: prohibit unpaved parking lots or treat existing lots. MAG plan identified both: a prohibition on unpaved haul road and parking or staging areas and surface treatment to reduce dust from unpaved driveways and parking lots. MAG plan, Table 5–2. The MAG plan identified one potential MSM, South Coast's Rule 403 which controls fugitive dust from parking areas on construction sites. MSM Study, p. C–9 and 10. It did not identify any potential MSM for non-construction site unpaved parking lots. We believe this list is complete and propose to find that the MAG plan evaluates a comprehensive set of potential BACM and MSM for unpaved parking lots.

Most local jurisdictions in Maricopa County identified ordinances that require paving of new parking lots. In addition, MCESD Rule 310.01, section 303 requires owners/operators of an unpaved parking lot larger than 5,000 square feet to pave, apply dust suppressants, or apply gravel, according to the applicable rule's standards/test methods. Applicable standards include a 20 percent opacity standard, and an 8 percent silt content standard and/or a 0.33 oz/square foot silt loading standard. Section 303.2. MCESD Rule 310, section 302.1 applies the same stabilization requirements to parking lots on permitted facilities. Finally, many cities/towns have treated their own parking lots or required treatment of private lots below MCESD's thresholds.

In determining whether the MAG plan provides for the implementation of BACM for unpaved parking lots, we are first specifically considering whether the plan provides for the implementation of RACM for these sources.[23] In our 1998 moderate area PM–10 FIP for the Phoenix area, we promulgated a RACM fugitive dust rule applicable to unpaved parking lots in the Phoenix PM–10 nonattainment area. 40 CFR 52.128(d)(3). This rule provides a starting point for determining whether the MAG plan's measures for unpaved parking lots meet RACM. It is not necessary for them to be identical to the FIP rule in order to meet the CAA's RACM requirement, but only that they provide for the implementation of RACM. However, if the submitted measures for a particular source are identical to the FIP rule, we can determine without further analysis that the MAG plan has provided for RACM for that source.

MCESD requirements for unpaved parking lots found in Rule 310.01, section 303 are the same in terms of source coverage and applicable standards/test methods for unpaved parking lots as the FIP rule, with the only difference being that Rule 310.01 applies county-wide while the FIP rule applies strictly to sources located in the PM–10 nonattainment area (located in the eastern third of the County). Rule 310.01 requirements became effective when the rule was adopted on February 2000. In light of the fact that Rule 310.01 requirements are the same as the FIP rule requirements and MCESD has made enforceable commitments to improve compliance and enforcement of Rule 310.01, we propose that the MAG plan provides for the implementation of RACM. Given the additional city/town commitments in the MAG plan that collectively increase the stringency of control on unpaved parking lots, we propose that the MAG plan also provides for the implementation of BACM. Both Rule 310.01 and the city/town commitments were implemented prior to June 10, 2000, the BACM implementation deadline for the Phoenix area.

As the only potential MSM, the MAG plan identifies South Coast's Rule 403 which requires sources to apply dust suppressants to stabilize at least 80 percent of unstabilized surface area and to comply with a 0 percent opacity property line limit. The MAG plan deems the respective requirements roughly equivalent to Rule 310. MAG plan, p. 10–29. We believe that the addition of a silt loading/content standard for unpaved parking lots for sources covered under Rule 310 increases the rule's stringency such that it is at least equivalent to that of South Coast Rule 403. We, therefore, propose to find that the MAG plan correctly concludes that there are no MSM in other State plans or used in practice elsewhere that are applicable to the Phoenix area.

f. Disturbed Vacant Lands

This category includes windblown fugitive dust emissions from disturbed surfaces of vacant lands. On vacant land, fugitive dust emissions are caused by virtually any activity which disturbs an otherwise naturally stable parcel of land, including earth-moving activities, material dumping, weed abatement, and vehicle traffic. 63 FR 15919, 15937 (April 1, 1998).

The MAG plan includes three suggested measures for controlling fugitive dust from vacant disturbed lands. MAG plan, Table 5–2. The plan also identified controls on weed abatement operations and off-road racing as potential MSM. MAG plan, Table 10–7. We believe this list is complete and propose to find that the MAG plan evaluates a comprehensive set of potential BACM and MSM for disturbed vacant lands.

Both MCESD rules 301 and 301.01 address vacant lots. Rule 310 requirements apply to vacant lots

[23] While a serious area PM–10 plan must provide for both the implementation of RACM (to the extent that it has not already satisfied the requirement in its moderate area plan) and BACM, in determining whether such a plan provides for BACM implementation, we do not normally conduct a separate evaluation to determine if the measures also meet the RACM requirements of the CAA as interpreted by EPA in its General Preamble. See 57 FR 13540. This is because in our serious area guidance (Addendum at 42010), we interpret the BACM requirement as generally subsuming the RACM requirement (i.e., if we determine that the measures are indeed the ''best available,'' we have necessarily concluded that they are ''reasonably available''). See Addendum at 42012–42014. Therefore, a separate analysis to determine if the measures also represent a RACM-level of control is not generally necessary. However, in this particular case, we have already established through our FIP rule what we consider to be a RACM-level of control for this source category. Thus our FIP rule provides us with a baseline against which we can review whether the MAG plan provides not only for RACM but also goes beyond that for BACM. We also intend to eventually withdraw the FIP rule in favor of local controls. In order to do this, we must determine under CAA section 110(1), that, among other things, withdrawing the FIP rule does not interfere with the RACM requirements in the CAA. An explicit determination now simplifies this future action.

located at permitted facilities (including construction sites) and Rule 310.01 requirements apply to nonpermitted sources.[24] Rule 310 and Rule 310.01 requirements apply to both publicly and privately owned lots. Rule 310, section 302.3 and Rule 310.01, section 301 and 302.

In determining whether the MAG plan provides for the implementation of BACM for disturbed vacant land, we are also specifically considering whether the plan provides for the implementation of RACM for this source category. See Footnote 23. In our FIP, we promulgated a RACM fugitive dust rule applicable to disturbed vacant land in the Phoenix PM–10 nonattainment area. 40 CFR 52.128(d)(3). This rule provides a starting point for determining whether the MAG plan's measures for disturbed vacant lands meet the RACM requirement. It is not necessary for them to be identical to the FIP rule in order to meet the CAA's RACM requirement, but only that they provide for implementation of RACM. However, if the submitted measures for a particular source are identical to the FIP rule, we can determine without further analysis that the MAG plan has provided for RACM for that source.

Rule 310.01 requirements for vacant lots and open areas are virtually identical to the Phoenix FIP rule's requirements for these sources. Rule 310.01, however, is more broadly applicable. It covers vacant lots and open areas located anywhere in Maricopa County, in contrast to the Phoenix FIP rule, which only applies to lots in the Maricopa County portion of PM–10 nonattainment area. Rule 310.01, sections 301 and 302. Unlike the FIP rule, Rule 310.01 also applies to partially developed residential, industrial, institutional, governmental, or commercial lots in Maricopa County, and any tract of land in the Maricopa County portion of the nonattainment area adjoining agricultural property. Rule 310.01, section 211.

Rule 310 requirements for vacant lots and open areas on permitted sources are more stringent than those in Rule 310.01, in that Rule 310 requires stabilization of all inactive disturbed surface areas on permitted facilities, regardless of their size. Rule 310, section 302.3. Rule 310 also contains requirements for weed abatement that closely resemble the Phoenix FIP rule's weed abatement requirements, except that Rule 310's threshold for coverage is lower.[25]

Vacant lots and open areas subject to Rule 310 and Rule 310.01 are required to meet the same surface stabilization standards/test methods as required in the Phoenix FIP rule.

In addition to requirements in Rule 310 and Rule 310.01, the MAG plan contains commitments by several cities and towns to address vacant disturbed lots. For example, seven jurisdictions require or will require stabilization of disturbed vacant lots after 15 days of inactivity (as compared to Rule 310.01's 60-day compliance period); two (2) prohibit dumping of materials on vacant land; and two (2) will stabilize all city-owned vacant lots. See EPA TSD section ''Implementation of BACM and Inclusion of MSM for Disturbed Vacant Land.''

Because Rules 310 and 310.01 requirements are at least as stringent as the FIP rule requirements and MCESD has committed to improve compliance and enforcement of these rules (as discussed below), we propose that the MAG plan provides for the implementation of RACM on disturbed vacant land. Because these rules increase the number of lots subject to control which collectively increase the stringency of control on vacant disturbed lands, we propose that the MAG plan also provides for the implementation of BACM. All measures for vacant disturbed lands were implemented prior to the June 10, 2000 BACM implementation deadline for the Phoenix area.

For its MSM analysis, the MAG plan identifies measures in Clark County (Las Vegas, Nevada) Rule 41 and South Coast Rule 403. See MSM Study, pp. C–11 and C–16, 17. The plan concludes that neither measure is more stringent than the Maricopa measures because Rule 310 and 310.01 contain similar and equally or more stringent requirements. We agree that the MCESD's rules are equally or more stringent.

We, therefore, propose to find that the MAG plan correctly concluded that there are no MSM in other State plans or used in practice elsewhere that are applicable to the Phoenix area.

g. Unpaved Roads

This category includes re-entrained dust from vehicle travel on unpaved roads. There are three classes of unpaved roads in the Maricopa nonattainment area: public roads, private roads that are publicly maintained (also referred to as minimally-maintained or courtesy grade), and private roads that are privately maintained.

The MAG plan includes three suggested measures for controlling fugitive dust from unpaved roads: Surface treatment to reduce dust from unpaved roads and alleys, traffic reduction/speed control plans for unpaved roads; and prohibition of unpaved haul roads. MAG plan, Table 5–2. The MAG plan does not identify any other State's measures that are more stringent than the ones already in the plan. We believe this list is complete and propose to find that the MAG plan evaluates a comprehensive set of potential BACM and MSM for unpaved roads.

In determining whether the MAG plan provides for the implementation of BACM for unpaved roads, we are also considering whether the Plan provides for the implementation of RACM for these sources. See Footnote 23. In our FIP, we promulgated a RACM fugitive dust rule applicable to unpaved roads in the Phoenix PM–10 nonattainment area. 40 CFR 52.128(d)(3). This rule provides a starting point for determining whether the MAG plan's measures for unpaved roads meet the RACM requirement. It is not necessary for them to be identical to the FIP rule in order to meet the CAA's RACM requirement, but only that they provide for implementation of RACM. However, if the submitted measures for a particular source are identical to the FIP rule, we can determine without further analysis that the MAG plan has provided for RACM for that source.

As discussed below, we propose to find that the MAG plan provides for the implementation of RACM and BACM and the inclusion of MSM for unpaved roads.

Surface treatment to reduce dust from unpaved roads and alleys. The principal control measure for public unpaved roads and alleys is Rule 310.01, section 304, which requires all publicly-owned unpaved roads and alleys with 250 vehicles per day (VPD) or more to be stabilized by June 10, 2000 and those with 150 vehicles per day or more to be stabilized by June 10, 2004.

Several cities have commitments that go beyond the requirements of Rule 310.01 for publicly-owned unpaved roads. For example, the City of Phoenix committed to—and accomplished before June 10, 2000—paving all 80 miles of its publicly-owned unpaved roads regardless of the level of vehicle travel. Phoenix Commitment, Measure 98-DC–

[24] Permitted sources include any facility permitted by MCESD and are not limited solely to those facilities with earthmoving permits, Rule 310, section 102.

[25] Rule 310 requires any earthmoving operation that disturbs 0.1 acre or more to have a dust control plan, including weed abatement by discing or blading, whereas the Phoenix FIP rule weed abatement requirements only apply to disturbances equal to or greater than 0.5 acres. Rule 310, section 303 and 40 CFR 52.129(c)(3) and (d)(3)(i).

7. Other cities, such as Tempe and Gilbert, have very few remaining miles of public unpaved roads/alleys. See Tempe Commitments, Measure 98-DC–7 and Gilbert Commitments, Measure 98-DC–7.

For private roads, Rule 310, section 308.6, requires that easements, rights-of-way, and access roads for utilities (electricity, natural gas, oil, water, and gas transmission) that receive 150 or more VPD must be paved, chemically stabilized, or graveled in compliance with the rule's standards.

Private unpaved roads are scattered throughout Maricopa County, within both County and city jurisdictions. A survey performed for us of unpaved roads in Maricopa County determined that the great majority of identified unpaved road mileage consists of privately-owned roads that receive minimal maintenance by the Maricopa County Department of Transportation (MCDOT).[26]

MAG and MCDOT have committed to pave County minimal maintenance roads within the nonattainment area that currently exceed 150 VDT and meet criteria to become public highways, using $22 million in CMAQ and MCDOT funds. MAG Commitment; Maricopa County Commitment, 1999 Revised Measure 17. This program will pave an estimated 60 miles of unpaved roadways in fiscal years 2001–2003 which is approximately 20 percent of the privately-owned, publicly-maintained County-jurisdiction roads and account for 40 percent of all VMT on these roads. Maricopa County has also committed to continue to evaluate other roads for funding when traffic levels increase above 150 vehicle trips per day. Maricopa County Commitment, 1999 Revised Measure 17. We interpret this commitment to apply to any private roads within County jurisdiction, whether they currently receive minimal maintenance or not.

As the County evaluates roads for paving, it may make exceptions to its commitment to pave roads with vehicle trips that exceed 150 VDT. The County's evaluation process takes into account whether estimated costs of paving are excessive (greater than $500,000 per mile).[27] When MCDOT identifies a road that meets these criteria (i.e. the road can be declared a public highway and costs are not excessive), it will recommend that the Board of Supervisors open and declare the road a public highway.[28]

Because BACM implementation properly takes costs into account, we believe that MCDOT's criteria for selecting private roads to pave are suitable in the context of a strategy to implement BACM and will result in control of the great majority of high traffic unpaved roads. Although available information on private roads in city jurisdictions is limited, our existing information suggests that a typical privately-owned unpaved road has little traffic on it.[29] As a result, we believe that the vast majority of private unpaved roads do not need to be controlled in order for us to determine that the MAG plan provides for the implementation of BACM for unpaved roads for the 24-hour standard.

Traffic reduction/speed control plans for unpaved roads. Some jurisdictions committed to evaluate this measure. Two jurisdictions committed to posting 15 mph speed limit signs on private and public unpaved roads and access ways; one jurisdiction has posted 15 mph speed limits in all alleys. See MAG plan, Table 10–9. Also, under Rule 310, owners/operators of unpaved haul roads and utility roads who comply with the rule by limiting vehicle trips to 20 per day, must also limit vehicle speeds to 15 mph. While speed limit controls are only being implemented to a limited extent, we believe the plan's measures to pave or otherwise stabilize unpaved roads in the Phoenix PM–10 nonattainment area establish the critical commitments for the implementation of RACM and BACM because road stabilization ensures emission reductions whereas speed limits may or may not be observed.

Prohibition of unpaved haul roads. Rule 310 requires that unpaved haul roads meet both a 20 percent opacity standard and a silt content or silt loading standard. Rule 310, section 302.2. We propose to find that this requirement is sufficient for the implementation of BACM for these roads. We believe requiring compliance with both of these standards ensures that these roads will be stabilized.

Evaluation of unpaved road measures in other areas found none that are more stringent than the measures for unpaved roads in the MAG plan. MAG plan, Table 10–7. We agree and propose to find that there are no other MSM for unpaved roads than are already included in the MAG plan.

Please see the TSD section ''Implementation of BACM and Inclusion of MSM for Unpaved Roads'' for a more detailed discussion of our proposed findings.

h. Construction Sites and Activities

Sources of fugitive dust emissions at construction sites include land clearing, earthmoving, excavating, construction, demolition, material handling, bulk material storage and/or transporting operations, material track out or spillage onto paved roads (which we have addressed in the paved road section), and vehicle use and movement on site (e.g., the operation of any equipment on unpaved surfaces, unpaved roads and unpaved parking areas). Windblown emissions from disturbed areas on construction sites are also a source of PM–10. Construction operations, which are mostly earthmoving, represent some 90 percent of the emissions in this source category.

The suggested measure in the MAG plan for controlling emissions from construction sites are actually various means of improving compliance with controls rather than new control requirements for construction sites. See

[26] Pacific Environmental Service, ''Survey for Fugitive Dust Emission Sources'', April 15, 1999.

[27] A private road begins to bear other than local traffic through extensions of other nearby public roads or the construction of an indirect source that attracts external drivers using the road as a short cut. See Maricopa County Commitments, 1999 Revised Measure 17.

[28] Maricopa County provided an update to us of their efforts to identify and pave County minimal maintenance roads. Kelly McMullen, MCDOT, via email on May 4, 2001. The County identified approximately 68 miles of minimal maintenance roads (courtesy grading only) that potentially could have over 150 VPD traffic. Of those roads, the County was unable to gather traffic count information for approximately 3 miles due to repeated counter vandalism or theft. The County included remaining roads with traffic counts over 130 VPD (allowing for short term growth seasonal variation, etc.) in its program to pave, totaling approximately 65 miles, consisting of approximately 186 segments. The first group of these roads was expected to have a bid awarded in June 2001 and be paved by Fall 2001. Design work for the second group was expected to begin in Summer 2001 and is expected to go to bid for construction within the next twelve months. Design work for the third group also expected to begin in Summer 2001 and is expected to be bid approximately 10–12 months following the second group. This third group reflects the most difficult engineering and environmental issues. Based on project engineer estimates at this time, the County believes that six segments totaling approximately 3.0 miles may exceed the reasonable cost threshold of $500,000 per mile, or have issues with adjoining property owners that are not possible to resolve within the SIP time frames. The County will evaluate whether another method of dust suppression may be viable for those segments.

[29] Through MAG, we requested additional information on private unpaved roads from the cities of Chandler, Scottsdale, Gilbert, Glendale, Mesa, Phoenix, Tempe, Peoria, Avondale, Carefree, Cave Creek, El Mirage, Goodyear, and Surprise. Letter Colleen McKaughan, EPA, to Lindy Bauer, MAG, March 21, 2001. All but three cities responded to the survey. Five cities state that they currently have no private unpaved roads with greater than 150 VPD. Three cities indicate they do not believe there are private unpaved roads with greater than 150 VPD in their jurisdictions. The remaining cities either have a small number of private road miles identified with greater than 150 VPD or make no statement regarding the number of private road miles with greater than 150 VPD in their jurisdictions. Letter Lindy Bauer, MAG, to Colleen McKaughan, EPA, June 29, 2001.

MAG plan, Table 5–2. MCESD had already adopted controls for construction sites in its fugitive dust rule, Rule 310. The plan also identifies several potential MSM. See MAG plan, Table 10–7. We propose to find that the MAG plan evaluates a comprehensive set of potential controls for construction sites emissions including the potentially MSM from other states.

Rule 310's requirements, effective on February 16, 2000, apply to any source required to obtain a permit under Maricopa County rules, which includes earthmoving operations of 0.10 acre or more [30] and sources subject to title V permits,[31] non-title V permits, or general permits. In addition to rule requirements for fugitive dust sources located at any permitted source, Rule 310 requires that a Dust Control Plan (DCP) be submitted for any earthmoving operations of 0.10 acre or more, and that the DCP be approved prior to commencing any dust generating operation. The rule's definition of a dust generating operation includes any activity capable of generating fugitive dust including land clearing, earthmoving, weed abatement by discing or blading, excavating, construction, demolition, material handling, storage and/or transporting operations, vehicle use and movement, the operation of any outdoor equipment or unpaved parking lots.

For other permitted sources, Rule 310 requires that a DCP be submitted and approved prior to commencing any routine dust generating activity, defined as any dust generating operation which occurs more than 4 times per year or lasts 30 cumulative days or more per year.[32]

Specific Rule 310 requirements include:

- a 20 percent opacity requirement for any dust generating operation
- wind event controls
- implementation of controls before, after and while conducting any dust generating operation, including weekends, after work hours and holidays
- required controls and standards for:
- unpaved parking lots
- unpaved haul/access roads
- disturbed open areas and vacant lots
- bulk material hauling
- bulk material spillage, carry-out, erosion and track out
- open storage piles
- weed abatement by blading or discing
- a requirement in dust control plans for at least one primary and one contingency control for all fugitive dust sources; the contingency measure is to be immediately implemented if the primary control proves ineffective

In order to comply with the rule's 20 percent opacity standard and dust control plan requirements for implementing primary and/or contingency controls for earthmoving activities, sources need to apply one or more controls, which in most cases includes applying water or another dust suppressant before and during operations. Inactive disturbed surfaces must be stabilized to meet at least one of the rule's stabilization standards (e.g. visible crusting, 10 percent rock cover, etc.). Unpaved roads and unpaved parking lots must also be stabilized to meet both a 20 percent opacity standard and a silt content/loading standard.[33] Test methods associated with stabilization and opacity standards are contained in Appendix C, which was submitted with Rule 310.

The 1999 revisions to Rule 310 that have increased the rule's stringency include the addition of specific work practice standards, the addition of stabilization standards and test methods for unpaved surfaces, and modifications to the opacity test method (adding an alternative opacity test method for unpaved roads and unpaved parking lots and modifying the opacity test method for other sources). We believe that the new and/or revised standards/test methods provide for a greater degree of control than under the previous SIP-approved version of Rule 310.

In addition to these Rule 310 revisions, MCESD made three enforceable commitments to further strengthen requirements for construction sites in 1999. See Maricopa County Commitments, Revised Measure 6. MCESD has recently revised these commitments and will take the revisions to the Maricopa County Board of Supervisors in December, 2001 for formal adoption as enforceable commitments. See Letter, Al Brown, MCESD to Jack Broadbent, EPA, September 13, 2001 (MCESD commitment letter). The commitments are to:

1. Research and develop a standard(s) and test method(s) for earth moving sources, designed to be enforceable and meet BACM requirements as to stringency and the number of sources that it applies to. Revise Rule 310 and/or Appendix C by no later than December 2002 to modify the existing opacity standard/test method or add an additional opacity standard(s)/test method(s), tailored to non-process fugitive dust sources that create intermittent plumes. This commitment will be met in its entirety only if the standard(s)/test method(s) is approved by EPA. The County is also proposing to support and coordinate with Clark County, Nevada in the ongoing research to develop fugitive dust test methods through the appropriation of $25,000.

2. Part 1: Onsite Implementation of Dust Control Plan

Raise awareness of onsite project supervisors to acquire and read approved site dust control plans thereby improving the implementation of the dust control plan at the construction site. This objective will be achieved through one-on-one contact at the time of inspection and through the development of a revised training curriculum and supporting materials for both a classroom setting and onsite aids for improved project management. Maricopa County inspectors will continue to go over dust control plans with construction site personnel during the initial site inspection and whenever issues arise during subsequent inspections. The training curriculum being developed by the Arizona Department of Transportation (ADOT) is scheduled for completion in winter of 2002 and implementation of the second level of dust control education will begin March—June 2003.

Part 2: Dust Control Plan Improvements

Research, develop and incorporate additional requirements for dust suppression practices/equipment into dust control plans and/or Rule 310 by March—December 2002. Based on the ADOT research, MCESD research or other alternative research, Maricopa County will develop a growing list of criteria for effective versus ineffective dust suppression practices that address various site circumstances.

3. Revise the sample daily recordkeeping logs for new and renewed Rule 310 permits to be consistent with rule revisions and to provide sufficient detail documenting the implementation of dust control measures required by

[30] Earthmoving operations include cutting and filling, grading, leveling, excavating, trenching, loading or unloading of bulk materials, demolishing, blasting, drilling, adding to or removing bulk materials from open storage piles, back filling, soil mulching, landfill operations, or weed abatement by discing or blading.

[31] Title V permits are operating permits required by Title V of the Clean Air Act for major stationary sources and certain other stationary sources.

[32] This is in addition to the requirement to submit a DCP for any earthmoving operation that disturbs 0.10 acre or more even if the operation is subject to Title V or other permitting requirements.

[33] Unpaved roads must meet a 6 percent silt content standard or, alternatively, a 0.33 oz/ft^2 silt loading standard, while unpaved parking lots must meet an 8 percent silt content standard or, alternatively, a 0.33 oz/ft^2 silt loading standard.

Rule 310 and the dust control plan. Distribute sample log sheets with issued permits and conduct outreach to sources by December 2001.

The first commitment addresses our concern that the existing opacity standard and test method for earthmoving operations may not always be sufficient to control construction site dust to BACM levels. MCESD has already revised the opacity test method to deal partially with this concern (see Rule 310, Appendix C), but we believe that additional standards/test methods are needed to fully assure that sources are effectively controlled.

Field research is needed to identify an appropriate standard(s) and test method(s) to meet this commitment. MCESD originally committed to complete this research and revise the opacity method by July 2001 but was unable to do so. It now intends to work with Clark County which has recently conducted research on test methods for earthmoving sources and is planning to conduct a second phase of research. MCESD will contribute funding to these efforts. MCESD has requested a one-year extension of the deadline in its original commitment in order to monitor, validate and verify the resulting test method(s) performance in Maricopa County.

The second commitment addresses our concern that DCPs lack specific criteria for dust suppressant application. For example, a source engaged in grading or cut-and-fill earthmoving for a multi-acre project may choose to comply with Rule 310 by applying water. However, neither the rule nor DCPs establishes minimum criteria for the number of water trucks/water application systems and water truck capacity for any given size construction site or a ratio of earthmoving equipment to water trucks. Also, for effective dust control, certain soil types may require substantial pre-wetting, thorough mixing of water into the soil for uniform penetration, and/or dust surfactant or tackifyer combined with water; neither Rule 310 nor DCPs currently require such measures for any sites.

Establishing criteria for dust control is complicated by variations in soils, meteorological conditions, equipment size/use, project phase, and level of activity. All these factors can impact the amount of water (or other controls) needed to control fugitive dust on a particular site on a particular day and has made it difficult to establish these criteria. Because of this difficulty MCESD has revised its original commitment to allow additional time to develop them.

MCESD has also expanded its original commitment to include a program to work with on-site supervisors to assure that they obtain and review the DCP for their sites. In implementing Rule 310 during the last year, it found that site supervisors do not have or do not know what is in their DCPs and thus may not be implementing appropriate dust control methods.

The third commitment addresses our concern that while Rule 310 currently contains an acceptable recordkeeping requirement, a more specific recordkeeping requirement would help improve compliance. Currently neither the rule nor DCPs specify what information should be included in a daily log. MCESD has revised its original commitment to allow additional time to work with its stakeholders to develop daily recordkeeping log sheets to provide sufficient detail documenting the implementation of dust controls.

We propose to find that Rule 310 as adopted on February 16, 2000 and combined with the commitments by MCESD to make certain additional changes to the Rule, provide for the implementation of RACM and BACM on construction sites for the 24-hour PM–10 standards.[34] We have also determined that the revised commitments do not affect our previous proposed finding that Rule 310 combined with the commitments provide for the implementation of RACM and BACM on construction sites for the annual standard. 65 FR 19964, 19980. The rule is comprehensive in scope in that each dust source is subject to a set of requirements under Rule 310 (e.g. storage piles, dirt trackout, haul truck loads, disturbed areas, earthmoving operations).

The MAG plan identifies several potential most stringent construction site fugitive dust measures either in or under consideration for inclusion in others SIPs. See MSM Study, Table 1–2 and Table 3–1.

Most of the potential MSMs are provisions in South Coast fugitive dust rule, Rule 403. The MAG plan indicates that each of the South Coast and MCESD's rules are more stringent than the other in certain respects. MAG plan, p. 10–35. The MAG plan acknowledges that Rule 403 contains more stringent control measure requirements than those imposed by Rule 310. For example, Rule 403 requires that water be applied to soil not more than 15 minutes prior to moving the soil and requires open storage piles to be watered twice per hour or covered. However, the MAG plan indicates that Rule 310's 20 percent opacity limit is generally more restrictive than Rule 403's property line standard because a 20 percent opacity fugitive dust plume typically disperses to zero visibility within 50 feet downwind of a source. MSM Study, p. C–12. The MAG plan concludes that, on balance, Rule 310 is equally stringent compared to Rule 403's construction site requirements. We agree with this conclusion with the caveat that we believe Rule 310 and/or dust control plans require additional controls for dust suppression. This caveat is addressed in the MAG plan's commitment to research, develop and incorporate additional requirements for dust suppression practices/equipment for construction activities into dust control plans and/or Rule 310.

The MAG plan does not discuss any construction site measures from other areas as potential most stringent measures. Based on our work with the Las Vegas area, we have identified requirements in Clark County Health District permits that are potentially more stringent than Maricopa County's measures.[35] These requirements include stand tanks on projects that are 10 acres or more in size, an additional, separate water truck when using a trencher or when screening, a separate water truck or pull during landscaping, maintaining all stockpiles in a moist condition, etc.

We propose to find that Rule 310's existing provisions and Maricopa County's second commitment to research, develop and incorporate additional requirements for dust suppression practices/equipment into Rule 310 and/or DCPs are consistent with Clark County's requirements.

We have also identified a requirement in Imperial County Regulation VIII that is potentially more stringent than Maricopa County's measures. Imperial County Regulation VIII requires that water be applied 15 minutes prior to

[34] These revised commitments are currently unenforceable because they have not been adopted by Maricopa County's Board of Supervisors. We are, however, proposing to approve these commitments under CAA section 110(k)(3) as an enforceable element of the Arizona SIP because we fully expect that the Board will adopt these commitments as enforceable SIP commitments and the State will submit them as a complete SIP revision prior to our final action. However, if we do not receive the adopted commitments by the time we must take final action, we propose to conditionally approve them under CAA section 110(k)(4). If we take final action to conditionally approve these commitments, MCESD will have one year to fulfill the commitment or the approval will turn into a disapproval and we would no longer be able to find that the MAG plan provides for the implementation of BACM and the inclusion of MSM on construction sites for either the annual or 24-hour standards.

[35] These requirements are not in Clark County's fugitive dust rule but rather are required practices in dust control permits.

handling or transferring bulk material, chemical/physical stabilization, or sheltering/enclosure of the operation and transfer line. While Maricopa County Rule 310 requires owners/operators to comply with a 20 percent opacity standard for any dust generating operation and DCP must include a control measure for every fugitive dust source (including bulk material handling/transfer), it does not contain specific requirements as Imperial County does for this activity. However, watering 15 minutes prior to handling may be overly prescriptive and not necessary in all cases to meet the rule's performance standards. We propose to find that Maricopa County's second commitment to research, develop and incorporate additional requirements for dust suppression practices/equipment into Rule 310 and/or DCPs is consistent with Imperial County's requirements.

For these reasons, we propose to find that the MAG plan provides for the inclusion of the MSM applicable to the Phoenix area for construction sites and activities. See Footnote 34.

i. Agricultural Sources

The agriculture source category covers all dust generating activities and sources on farms and ranches. These activities and sources include land planning, tilling, harvesting, fallow fields, prepared fields, field aprons, and unpaved roads. This source category is a very significant contributor to 24-hour PM–10 standard exceedances in the Phoenix area. At the West Chandler site, 55 percent of the modeled exceedance was due to agricultural sources (a cotton field and its apron). At the Gilbert site, 26 percent of the modeled exceedance was due to an agricultural source (a field apron). See Microscale plan, pp. 18–19.

In order to develop adequate controls for this source category, Arizona passed legislation in 1997 establishing an Agricultural Best Management Practices (BMP) Committee and directing the Committee to adopt by rule by June 10, 2000, an agricultural general permit specifying best management practices for reducing PM–10 from agricultural activities. The legislation also required that the implementation of agricultural controls begin with an education program starting by June 10, 2000 with full implementation by December 31, 2001. See Arizona Revised Statutes (A.R.S.) 49–457.

After a series of meetings during 1999 and 2000, the Agricultural BMP Committee adopted the agricultural general permit and associated definitions, effective May 12, 2000, at Arizona Administrative Code (AAC) R18–2–610, ''Definitions for R18–2–611,'' and 611, ''Agricultural PM–10 General Permit; Maricopa PM10 Nonattainment Area'' (collectively, general permit rule). The State submitted the general permit rule in July 2000 and its analysis quantifying the emission reductions expected from the rule and the demonstration that the rule meets the CAA's RACM, BACM and MSM requirements in June 2001. We proposed to approve it as meeting the CAA requirement for RACM on June 29, 2001 and signed the approval on September 10, 2001. See 66 FR 34598.

The general permit rule requires a commercial farmer to implement by December 31, 2001 at least one BMP for three categories of emission sources on a farm: tillage and harvest, non-cropland, and cropland. R18–2–610 defines commercial farmer as ''an individual, entity, or joint operation in general control of 10 or more continuous acres of land used for agricultural purposes within the boundary of the Maricopa County PM10 nonattainment area.'' R18–2–610 defines tillage and harvest as ''any mechanical practice that physically disturbs cropland or crops on a commercial farm.'' R18–2–610 defines non-cropland as ''any commercial farm land that: is no longer used for agricultural production; is no longer suitable for production of crops; is subject to a restrictive easement or contract that prohibits use for the production of crops; or includes a private farm road, ditch, ditch bank, equipment yard, storage yard, or well head.'' R18–2–610 defines cropland as ''land on a commercial farm that: is within the time frame of final harvest to plant emergence; has been tilled in a prior year and is suitable for crop production, but is currently fallow; is a turn-row.'' R18–2–610 defines a BMP as ''a technique verified by scientific research, that on a case-by-case basis is practical, economically feasible and effective in reducing PM–10 particulate emissions from a regulated agricultural activity.''

For enforcement purposes, a commercial farmer is required to maintain a record demonstrating compliance with the general permit. A commercial farmer not in compliance with the general permit is subject to a series of compliance actions described in A.R.S. 49–457.I–K.

The BMP Committee began implementing the general permit rule in June 2000 by means of an extensive educational outreach program informing growers about the BMPs. In addition, the BMP Committee developed a Guide to Agricultural PM–10 Best Management Practices to provide information and guidance on how to effectively implement BMPs.[36] Farmers must be in compliance with the general permit rule by December 31, 2001.

For the reasons discussed below and more extensively in the section ''Implementation of BACM and Inclusion of MSM for Agricultural Sources'' in the EPA TSD, we propose to find that the State's general permit rule meets the CAA's requirements to provide for the implementation of BACM by June 10, 2000 in CAA section 189(b)(1)(B) and to include MSM in section 188(e). Our proposed finding is applicable to both the annual and 24-hr standards. It revises our previously proposed finding in the annual standard proposal that the State's commitment in the MAG plan to adopt and implement agricultural best management practices meets the CAA's requirements for BACM and MSM by substituting the BMP general permit rule. 65 FR 19964, 19981.

In September 1998, the Agricultural BMP Committee appointed an Ad-hoc Technical Group to develop a comprehensive list of potential BMPs for regulated sources in the Maricopa County nonattainment area. Participants on the Ad-hoc Group included the USDA NRCS, USDA Agricultural Research Service, University of Arizona College of Agriculture, ADEQ, University of Arizona College of Agriculture and Cooperative Extension, Western Growers Association, Arizona Cotton Growers Association, Arizona Farm Bureau Federation, and EPA. BMP TSD, p. 15.

The Ad-hoc Technical Group reviewed available dust control regulations, literature, and technical documents, and developed a list of 65 conservation practices potentially suitable to agricultural sources in the Maricopa County nonattainment area for further consideration. BMP TSD, p. 16. These 65 measures represented a broad spectrum of potential BMPs, many of which related to conservation practices used in the western United States that had never been evaluated in the context of reducing PM–10.

The Agricultural BMP Committee thoroughly reviewed the potential practices presented by the Ad-hoc Technical Group and evaluated the potential BMPs using available information on technological feasibility, costs, and energy and environmental impacts. After an analysis of the limited

[36] ''Guide to Agricultural PM–10 Best Management Practices, Maricopa County, Arizona PM–10 Nonattainment Area,'' Governor's Agricultural BMP Committee, First edition, February, 2001.

information available and numerous public discussions, the Committee decided to include 34 of the 65 BMPs in the general permit rule and divided these 34 BMPs into the three categories of farm activities specified in A.R.S. 49–457.N.: 10 BMPs applicable to the tillage and harvest category; 10 BMPs applicable to the non-cropland category; and 14 BMPs applicable to the cropland category. See BMP TSD, 17. In selecting these BMPs, the Committee deemed them to be feasible, effective and common sense practices for the Phoenix area which minimized potential negative impacts on local agriculture.

Of the 31 potential BMPs eliminated, the majority were dropped because they either duplicated another BMP or did not reduce PM–10. Other reasons for elimination included the impracticability of a BMP for the Maricopa County Area, lack of cost effectiveness, or infeasibility of implementation. See June 13, 2001 BMP submittal, Enclosure 3, Attachment 8.

At the time the BMP Committee was developing the general permit rule, there was very limited available information concerning the technological feasibility, costs, and energy and environmental impacts of these BMPs. Although the Committee determined that all the selected BMPs were technologically feasible control requirements, it found that calculating the other impacts on a commercial farmer was difficult. Because of the variety, complexity, and uniqueness of farming operations in Maricopa County, the Committee concluded that farmers need a variety of BMPs in each of the three categories of agricultural activities to choose from in order to tailor PM–10 controls to their individual circumstances. Further, the BMP Committee acknowledged that there is a limited amount of scientific information available concerning the emission reduction and cost effectiveness of some BMPs, especially in relation to Maricopa County. The BMP Committee balanced the limited scientific cost effectiveness information with the common sense recognition that the BMPs would reduce wind erosion and the entrainment of agricultural soils, thereby reducing PM–10. As a result, and given the myriad factors that affect farming operations, the BMP Committee concluded that requiring more than one BMP for each of the three agricultural categories could not be considered technically justified and could cause an unnecessary economic burden to farmers. Instead, the BMP Committee and ADEQ agreed to monitor the effectiveness of the BMPs and adjust the program, if needed, in the future. BMP TSD, p. 18.

The general permit rule, as finally adopted by the BMP Committee in May 2000 as BACM and MSM, requires that commercial farmers implement at least one BMP for the tillage and harvest, cropland, and non-cropland categories by December 31, 2001.

We define a BACM-level of control to be, among other things, the maximum degree of emission reduction achievable from a source or source category which is determined on a case-by-case basis, considering energy, economic and environmental impacts. Addendum at 42010. Based on the BMP committee's findings regarding technological feasibility and economic effects of requiring more than one BMP per category, we believe that the BMP rule provides the maximum degree of emission reductions achievable from the agriculture source category in the Phoenix area and, therefore, meets the BACM requirement in section 189(b)(1)(B).[37]

A requirement that an individual source select one control method from a list, but allowing the source to select which is most appropriate for its situation, is a common and accepted practice for the control of dust. For example, in its PM–10 FIP for Phoenix, we promulgated a RACM rule applicable to, among other things, unpaved parking lots, unpaved roads and vacant lots. The rule allows owners and operators to choose one of several listed control methods (pave, apply chemical stabilizers or apply gravel). 40 CFR 52.128(d). In the case of the FIP, those subject to the fugitive dust rule were given a choice of control methods in order to accommodate their financial circumstances.[38]

Allowing sources the discretion to choose from a range of specified options is particularly important for the agricultural sector because of the variable nature of farming. As a technical matter, neither we nor the State is in a position to dictate what precise control method is appropriate for a given farm activity at a given time in a given locale. The decision as to which control method from an array of methods is appropriate is best left to the individual farmer. Moreover, the economic circumstances of farmers vary considerably. As a result, it is imperative that flexibility be built into any PM–10 control measure for the agricultural source category whether that measure is required to meet the RACM or BACM requirements of the Act.

We believe that the work of the BMP Committee resulted in the timely adoption of the general permit and educational programs that requires BACM implementation on a schedule that will allow time for the agricultural community to understand and select appropriate BMPs and to transition to new practices, some of which may involve the purchase of new equipment. Based on these factors, we believe that the BMP implementation schedule is as expeditious as practicable and meets the BACM implementation deadline for the Phoenix area of June 10, 2000.

The MAG plan identified two potentials MSM for agricultural sources (1) cessation of tilling on high winds days in South Coast's Rule 403.1 and (2) soil erosion plans in South Coast's Rule 403. MAG plan, Table 10–8. The plan concluded that neither is, by itself, MSM for the Phoenix area.

South Coast's 403.1, ''Wind Entrainment of Fugitive Dust,'' applies only in the Coachella Valley (Palm Springs) portion of the South Coast Air Basin and requires that, when wind speeds exceed 25 miles per hour (mph), agricultural tilling and soil mulching activities should cease. While the measure applies throughout the year, the high wind days tend to occur during a high-wind season that extends between April and June. The Coachella Valley typically experiences high winds on 47 days of the year. MAG estimated that there were a total of 37 hours,

[37] We also considered a BACM-level control as going beyond existing RACM-level controls, such as expanding use of RACM (e.g., paving more miles of unpaved roads). Addendum at 42013. As noted previously, we have proposed to approve the general permit rule as meeting the RACM requirement in CAA section 189(a)(1)(C). 66 FR 34598. In that proposal, we stated our belief ''that the general permit rule represents a comprehensive, sensible approach that meets, and in fact far exceeds, the RACM requirements of CAA section 189(a)(1)(C) and EPA guidance interpreting those requirements.'' 66 FR 34598, 34602. Moreover, we explained that the State also intended the general permit rule and its enabling legislation to meet the CAA's serious area requirements. 66 FR 34598, 34599. Thus today's proposal that the general permit rule meets the BACM and MSM requirements of the Act is consistent with our prior action.

[38] See, as examples, SCAQMD Rule 403 (providing for alternative compliance mechanisms for the control of fugitive dust from earthmoving, disturbed surface areas, unpaved roads etc.); and SCAQMD Rule 1186 (requiring owners/operators of certain unpaved roads the option to pave, chemically stabilize, or install signage, speed bumps or maintain roadways to inhibit speeds greater than 15 mph). We proposed to approve these SCAQMD rules as meeting the RACM and/or BACM requirements of the CAA on August 11, 1998 (63 FR 42786) and took final action approving them on December 9, 1998 (63 FR 67784). See also the approval of Maricopa County Environmental Services Department (MCESD) Rule 310 as meeting the RACM/BACM requirements (62 FR 41856, August 4, 1997) and the proposal to approve updated Rule 310 and MCESD Rule 310.01 as meeting the same requirements (65 FR 19964, April 13, 2000).

representing 11 days, with wind speeds greater than 15 mph in 1995 in Maricopa County.

The BMP general permit rule includes ''limited activity during high wind event'' as one of ten BMPs that a grower can choose for the Tillage and Harvest category. According to an analysis in the MAG plan, postponing tilling on high wind days would reduce emissions by 72 percent on high-wind days. MSM study, p. 4–23. However, because only 15 percent of the Maricopa County PM–10 nonattainment area tilling occurs during the high wind season (March through September) and because less than 4 percent of the days during this period experience winds greater than 15 mph, the air quality benefits of the measure would be small (*i.e,* 0.08 metric tons per average annual day in 1995) for the annual standard. MSM study, p. 4–23. Emissions from tilling are a very small contributor to total agricultural emissions on the 1995 design day (which was a high-wind day), representing just 1.6 percent of all agricultural emissions and are not implicated in 24-hour exceedances. URS, Technical Support Document for Quantification of Agricultural Best Management Practices, June 8, 2001 (Ag Quantification TSD), p. 3–11 and Microscale plan, pp. 18–19. Moreover, based on the limited amount of information available regarding the control efficiencies for the ten BMPs in the Tillage and Harvest category, the control efficiency for ''limited activity during high-wind event'' is on average as effective or less effective than the other BMPs in this category. Ag Quantification TSD, pp. 2–8 to 2–10.

South Coast's Rule 403, ''Fugitive Dust,'' requires the implementation of conservation practices to reduce PM–10 from agricultural sources in the South Coast PM–10 nonattainment area. Under Rule 403(h), agricultural operations exceeding 10 acres within the South Coast Air Basin are exempt from the rule's requirements for fugitive dust if the farmer implements the conservation practices in the most recent Rule 403 Agricultural Handbook. See ''Rule 403 Agricultural Handbook: Measures to Reduce Dust from Agricultural Operations in the South Coast Air Basin,'' South Coast AQMD, December 1998 (the Handbook). Because the requirements of Rule 403 are more stringent than the requirements for conservation practices in the Handbook, it is assumed that farmers will always choose to comply with the latter's provisions. Thus the Handbook, rather than Rule 403 itself, is effectively the potential MSM.

For a variety of reasons, it is difficult to directly compare the requirements in the general permit with the requirements in the Handbook. First, the South Coast did not attempt to estimate the reductions and cost from each conservation practice. Second, the types of crops grown in Maricopa County and the South Coast area differ significantly. For example, cotton is a dominant crop in Maricopa County but is not grown in the South Coast Air Basin. Third, the Handbook allows a grower to substitute a local ordinance for the three conservation practices required for ''inactive'' agricultural land; however, the minimum requirements for the local ordinance are not specified. Handbook, section II, p.4. Fourth, the general permit rule and the Handbook also differ in terms of exemption and waivers. The general permit rule does not exempt any crop types or provide a waiver option, but the Handbook exempts orchards, vine crops, nurseries, range land, and irrigated pastures from requiring a practice for the active and inactive categories. Finally, the Handbook also allows farmers to request a waiver if the farmer cannot apply the required practices or a verifiable alternative.

While the general permit rule divides agricultural activities into three categories and the Handbook divides them into six, and the terminology used is different, the categories of activities covered are essentially coterminous. Cf. Handbook, section I and ACC R18–2–610.7, .12, .22, .33. However, depending on the type of farming operation, the general permit rule would require implementation of at least one BMP for each of the Tillage and Harvest, Cropland, and Non-Cropland categories and the Handbook requires from one to three practices for its six agricultural categories.

As discussed above, in the BACM section of this TSD, the BMP Committee concluded that, because of the variety, complexity, and uniqueness of farming operations and because agricultural sources vary by factors such as regional climate, soil type, growing season, crop type, water availability, and relation to urban centers, agricultural PM–10 strategies must be based on local factors. Therefore, the general permit rule, as finally adopted by the BMP Committee in May 2000, reflects the conclusion of the BMP Committee that farmers need a variety of BMPs to choose from in order to tailor PM–10 controls to their individual circumstances. Further, the BMP Committee acknowledged that there is a limited amount of scientific information available concerning the emission reduction and cost effectiveness of some BMPs, especially in relation to Maricopa County. The BMP Committee balanced these limitations with the common sense recognition that the BMPs would reduce wind erosion and the entrainment of agricultural soils, thereby reducing PM–10.

While the Committee surveyed measures adopted in other geographic areas, these measures were of limited utility in determining what measures are available for the Maricopa County area. Given the limited scientific information available and the myriad factors that affect farming operations, the BMP Committee concluded that requiring more than one BMP could not be considered technically justified and could cause an unnecessary economic burden to farmers.

Adding to concerns about the economic feasibility of requiring more BMPs per farming activity is the general uncertainty regarding the cost of the BMPs and continued viability of agriculture in Maricopa County. Between 1987 and 1997, the number of farms operating in Maricopa County declined by approximately 30 percent and the amount of land farmed declined by approximately 50 percent. This trend is expected to continue. Finally, in order to justify additional requirements for farming operations in the area beyond those in the general permit rule, the BMP Committee determined that a significant influx of money and additional research would be needed. BMP TSD, p. 18.

Based on all of these factors, the BMP Committee concluded that the Handbook's practices were neither technologically nor economically feasible for agricultural sources in Maricopa County. BMP TSD, p. 18.

We agree with the analysis of the BMP Committee. As noted previously, the development of the general permit rule was a multi-year endeavor involving an array of agricultural experts familiar with Maricopa County agriculture. Maricopa County is only the second area in the country where formal regulation of PM–10 emissions from the agricultural sector has ever been attempted. For the reasons discussed above, we propose to conclude that the BMP general permit rule meets or exceeds the stringency of South Coast Rule 403.1's requirement for cessation of tilling during high winds. Based on the forgoing analysis of the Handbook, we also propose to conclude that the Handbook's requirements are neither technologically nor economically feasible for Maricopa County. Because all the identified potential MSM have either not been demonstrated to be more

stringent than existing Maricopa County controls or found to be infeasible for the area, we propose to find that the MAG plan provides for the inclusion of MSM as required by CAA section 188(e) to our satisfaction.

j. Residential Wood Combustion

The residential wood combustion (RWC) category includes emissions from the burning of solid fuel in residential fireplaces and woodstoves as well as barbecues and firepits.

Measures to control PM–10 from residential woodburning include a public education program, woodburning curtailment programs, retrofit requirements and restrictions or bans on the installation of woodburning stoves and/or fireplace. In total the MAG plan lists 11 potential BACM and 10 potential MSM. MAG plan Tables 5–2 and 1–7. We believe these list are complete and propose to find that the MAG plan evaluates a comprehensive set of residential woodburning measures.

MCESD Rule 318, Approval of Residential Woodburning Devices, establishes standards for the approval of residential woodburning devices that can be used during restricted-burn periods. Maricopa County's Residential Woodburning Restriction Ordinance provides that restricted-burn periods are declared by the Control Officer when the Control Officer determines that air pollution levels could exceed the CO standard and/or the PM standard (150 $\mu g/m^3$). We approved Rule 318 and an earlier version of the ordinance (revised April 21, 1999) as providing for the implementation of RACM. See 64 FR 60678 (November 8, 1999).

MCESD revised the ordinance on November 17, 1999 to allow the Control Officer to declare restricted-burn periods when the particulate matter pollution levels could exceed the ''particulate matter no-burn standard'of 120 $\mu g/m^3$. We proposed to approve the revised ordinance as part of the annual standard proposal. 65 FR 19964, 19990. In addition, A.R.S. section 9–500.16 and A.R.S. section 11–875 (1998) required cities and the County to adopt by December 31, 1998, an ordinance that prohibits the installation or construction of a fireplace or wood stove unless it is a fireplace with a permanently installed gas or electric log insert, a fireplace or wood stove that meets EPA's Phase II wood stove requirements, or a fireplace with a wood stove insert that meets EPA's Phase II stove requirements. Most jurisdictions have adopted or have committed to or indicated that State law requires them to adopt the required ordinance. See MAG Plan, pp, 7–55 to 7–64.

With these additional controls, the overall residential woodburning restriction program is strengthened and goes beyond the existing RACM-level program. Both strengthening and expanding existing programs are key criteria for demonstrating the implementation of BACM. See Addendum at 42013. Where the MAG plan has rejected potential BACM, it provides a reasoned justification for the rejection. All measures were implemented by June 10, 2000, the BACM implementation deadline for the Phoenix area. We, therefore, propose to find that the MAG plan provides for the implementation BACM for residential wood combustion.

The MAG plan identified a number of potential MSM for residential wood combustion. Except for the adoption of a lower threshold for calling no burn episodes, the plan does not provide for the adoption of any of these measures but provides reasoned and acceptable justifications for their rejection. Therefore, we propose to find that the MAG plan provides for the inclusion of MSM.

k. Secondary Ammonium Nitrate

Secondary ammonium nitrate is formed by a chemical reaction in the atmosphere between oxides of nitrogen (NO_X) and ammonia (NH^3). Ninety percent of NO_X comes from motor vehicle exhaust (both on and off road) and 99.9 percent of NH^3 comes from animal wastes. See MAG plan, Table 3–1.

Two potential BACM were identified for ammonia nitrate control: reduce emissions of ammonia and nitrates from agricultural operations and require animal waste management plans for farms/ranches with more than 50 animals. The first measure involves tilling in of manure used as fertilizer within 48 hours of application. MAG plan, Table 6–1, measure 97–AG–3. The second measure would focus on reducing ammonia emissions from livestock waste during the winter months when conditions are most conducive to ammonium nitrate formation. MAG plan, Appendix B, Exhibit 5, p. 5–70. For MSM, no measures were found that required animal waste management plans for farms or ranches and no other measures were identified. See MAG plan, Table 10–7. A large number of measures that could reduce NO_X emissions were identified and have been evaluated for on-road motor vehicles and nonroad engines. We believe this list of measures is complete and propose to find that the MAG plan evaluates a comprehensive set of potential controls for ammonium nitrate.

Data from earlier studies indicate that ammonia emissions would need to be reduced by 80 percent to have an appreciable impact on ambient concentrations of ammonium nitrate. MAG plan, Appendix B, Exhibit 5, p. C–1. Essentially all ammonia emissions in the inventory are from livestock and not from the application of manure to agricultural fields. As result, controls on the application of manure are very unlikely to have any impact on PM–10 levels in the Phoenix area and therefore are not technologically feasible. [39] The estimated reduction in ammonia from implementing waste management plans is 30 percent, far short of the 80 percent needed to show impact on PM–10 levels (MAG plan, Appendix B, Exhibit 5, p. 5–72), so we also believe that this measure is currently not technologically feasible.

Other than the on-road vehicle and nonroad engine categories, we do not believe that there are any other sources of NO_X that should be called significant in terms of contributing to ammonium nitrate levels. See MAG plan, Table 3–1.

Arizona has adopted a number of measures for controlling NO_X emissions from motor vehicles and nationally, we have established emission standards for control of NO_X from both on- and nonroad engines. The MAG plan does not identify any technologically feasible measures for the control of ammonia. For these reasons, we propose to find that the MAG plan provides for the implementation of RACM and BACM and for the inclusion of MSM for secondary ammonium nitrates.

1. MCESD's Commitments to Improve Compliance and Enforcement of its Fugitive Dust Rules

MCESD has committed to expanding and improving the compliance and enforcement program for its fugitive dust rules. These enforceable commitments are found in Maricopa County, 1999 Revised Measure 6, adopted December 15, 1999. A narrative description of them and other program changes are found in Appendix IV, Exhibit 3 to the MAG plan's modeling TSD. MCESD has also committed to continuing to improve Rule 310 and Rule 310.01. These commitments are described in Section E.3.h. ''Construction Sites and Activities.''

[39] We consider a measure technologically feasible for an area only if it has the potential to reduce emissions in a manner that reduces ambient concentrations in the area.

These improvements to the compliance and enforcement programs include increased public outreach and education, increased funding and staffing, increased inspection frequency, revised enforcement policies, and commitments to program evaluations and improvements. They address many of the program areas that are key to improving compliance and we believe form a solid program for increasing the effectiveness of the County's fugitive dust program.

We review these enforceable commitments and their current status below:

Staffing

Maricopa County committed to increasing its inspection staff to 8 inspectors, 1 supervisor, 1 aide and 2 enforcement officers by the end of January 2000 and to add a coordinator to the Small Business Environmental Assistance Program to assist smaller builders and construction companies and to help develop and implement education programs. It also committed to hire an attorney in the County Attorney's office to expedite civil litigation and to assist with prosecuting Class One Misdemeanor cases by April 2000. Total resources devoted to the fugitive dust program were to be increased to 15 positions, a 25 percent increase over previous levels. After reaching the committed staffing level, MCESD was to review the program in March 2000 to evaluate its effectiveness and the potential need to add more staff.

By the end of January 2000, inspection unit staffing increased to 8 inspectors, 1 supervisor, 1 coordinator (to oversee permit issuance and track notices of violations), 2 aides and 2 enforcement officer. By May 2000, the County Attorney's office hired an attorney, paralegal, and support staff. In 2000, the Department found that the existing staff in the Small Business Environmental Assistance Program was able to handle the workload for assisting smaller builders and construction companies and for helping to develop and implement education programs. MCESD will re-evaluated the need for an additional coordinator in the small business assistance program when the second generation outreach and education materials are completed. In total, resources devoted to the fugitive dust program during the past year were 17 positions, a 42 percent increase over previous levels.

Organization

MCESD created a new enforcement section under the direct supervision of the MCESD Director/Air Pollution Control Officer (APCO). This position streamlines enforcement by reducing senior management review and approval of enforcement actions and allows enforcement officers to submit directly to the APCO's desk all enforcement actions requiring APCO approval.

In addition, MCESD committed to locate inspectors in two new regional offices to provide quicker response times to dust-related complaints and allow more time in the field. It has in fact located inspectors in four regional offices.

Funding

For FY 1999–2000, revenue for fugitive dust program was projected to be $1.12 million from annual earth moving permit fees, a $772,000 increase over the previous level. The increase was due to the 1998 fee increase for earth moving permits.

For FY 2000–2001, anticipated revenue for the fugitive dust program is approximately $1.7 million, generated from annual earth moving permit fees. This is a $1.35 million increase over the previous level.

Inspection Program

MCESD committed to develop by April, 2000 inspection priorities for vacant lots and unpaved parking lots that consider lot size and number of sources, with larger lots being inspected first and smaller lots in succeeding years. A number of cities have municipal programs to address these sources; therefore, the Department committed to initially direct its inspections to cities lacking such programs and to track the city plans that are required by State statute to stabilize target unpaved roads, alleys and unpaved shoulders.

Prior to its adopting additional commitments in December 1999, MCESD had already increased inspection rates and improved procedures for permitted sources such as construction sites including:

- Proactively inspecting sites larger than 10 acres, 3 to 6 times per year and inspect smaller sites once within 30 days of project start date.
- Scheduling weekend inspections randomly once per month.
- Providing a shortened complaint response time with a goal of 8 hours for high priority complaints and maintaining the current goal of 24 hours for others
- Revising standard operating procedures and checklists for fugitive dust inspections to be consistent with the revised rules.
- Revising inspection standard operating procedures to have inspectors check for records and inspect fugitive dust sources at permitted stationary sources.

MCESD did develop by April, 2000 inspection priorities for vacant lots and unpaved parking lots considering lot size and number of sources with larger lots being inspected first and smaller lots in succeeding years. EPA and MCESD initially attempted, but were unsuccessful, to convert an Assessor's Office database of vacant lots into a user-friendly format for identifying priority lots. Now, MCESD inspectors are assigned geographical districts and are compiling notes on the vacant lots and unpaved parking lots in each district during their routine surveillance activities. Under current MCESD policy, the inspectors are first directed to handle all complaints and then to begin to address the larger sites on the individual district lists. In 2000, the inspectors made 499 inspections on vacant lots, unpaved parking lots, and unpaved roads.

Enforcement Program

To meet its commitment to revise its enforcement program, MCESD issued a revised air quality enforcement policy on April 28, 2000. See Air Quality Violation Reporting and Enforcement Policy and Procedure, MCESD, April 28, 2000. This policy:

- Includes guidelines for initiating various enforcement actions
- Includes guidelines for reinspecting
- Defines timely and appropriate action by laying out guidelines for which type of violation is appropriate for specific enforcement actions and for the time frames for escalating enforcement actions when appropriate
- Identifies priority violations
- Includes guidelines for when to seek penalties reflecting the economic benefit of noncompliance, if feasible
- Includes guidelines for seeking and determining higher penalties for repeat violators
- Includes guidelines for inspectors to handle predetermined citation categories form observation to justice court

Enforcement action options include issuing an Order of Abatement, filing a Misdemeanor Complaint in Justice court, or asking the County Attorney to seek a civil penalty in Superior Court.

Inspectors handle certain predetermined citation category violations and will be responsible for case development from observance of a violation to filing of the actual citation in the justice court. Having the inspectors handle routine cases enables the enforcement officers to work on

resolving cases involving more serious and complicated violations.

Public Outreach/Education

Public outreach and education consists of staff training, educating the regulated parties, developing good working relationships with other involved parties such as the cities, and making the program more understandable. Increased education of both inspectors and the regulated industry increases compliance.

Among the public outreach and education efforts will be:

- Inspector training on case development.
- Inspector training on revised test methods.
- City staff training on preparing inspection reports and notices of violation.
- On-going training at the local community college.
- Making information available on MCESD website.
- Distribution of information through city building departments and other sources.

In 2000, MCESD revised its dust control guidelines with its partners ADOT and Arizona State University. This year ADOT secured a research grant directed towards developing educational tools and outreach programs. This product will enhance the current guidelines, add information on the life cycle costs of controls and controls' impact on the construction process, and develop additional outreach tools. In addition, MCESD is currently working with two contractors to develop a model environmental management system for construction. These two efforts will add to the technical knowledge on dust control and offer additional tools for companies to increase compliance with regulations.

Program Evaluation and Tracking

MCESD committed to track the number of inspections, number and type of enforcement actions, amount of penalties assessed, and amount of penalties collected. It also committed to conduct mid-year reviews of the program in September, 2000 and again in March 2001 to evaluate progress and future needs.

MCESD conducted its reviews and will conduct then again in September, 2001 and again in March 2002 to evaluate progress and future needs. In 2000, MCESD conducted 6625 inspections. In the first year of operation under the new enforcement process, it issued 189 violations, processed 145 settlement cases and netted $425,000 in fines (May 1, 2000 to April 30, 2001).

G. Attainment Date Extension

Section 188(e) of the Act allows us to extend the attainment date for a serious area for up to five years beyond 2001 if attainment by 2001 is impracticable. However, before we may grant an extension of the attainment date, the State must first:

1. apply to us for an extension of the PM–10 attainment date beyond 2001,
2. demonstrate that attainment by 2001 is impracticable,
3. have complied with all requirements and commitments applying to the area in its implementation plan,
4. demonstrate to our satisfaction that its serious area plan includes the most stringent measures that are included in the implementation plan of any state and/or are achieved in practice in any state and are feasible for the area, and
5. submit SIP revisions containing a demonstration of attainment by the most expeditious alternative date practicable.

We evaluate the Maricopa County serious area plan's compliance with each of these requirements below.

1. Apply for an Extension

A state must apply for an extension and concurrently submit a SIP revision containing a demonstration that the area will attain by the most expeditious alternative date practicable. The state must provided the public reasonable notice and a hearing on the application before it is sent to EPA.

MAG, as the lead air quality planning agency for the Phoenix metropolitan area, formally requested an extension of the PM–10 nonattainment deadline to December 31, 2006. The documentation supporting this request is found in Chapter 10 of the MAG plan and Appendix C, Exhibit 5 of the MAG plan. MAG plan, p. 10–2. This extension request is an integral part of the MAG plan and was subject to public hearing along with the rest of the plan, including the demonstration that the area will attain the 24-hour standard by the earliest alternative date practicable.

2. Demonstrate the Impracticability of Attainment by December 31, 2001

CAA section 189(b)(1)(a)(ii) and our proposed policy on extension requests require that the serious area plan must show that the implementation of BACM (as determined by our guidance) on significant sources categories will not bring the area into attainment by December 31, 2001 in order to claim that attainment by that date is impracticable.

To evaluate the impracticability of attainment by 2001, the MAG plan evaluated the impact of BACM on sources at both the West Chandler and Gilbert sites in 2001. The evaluation showed these BACM-level controls left 24-hour PM–10 levels well above the 24-hour standard at both sites in 2001, thus demonstrating attainment is impracticable by then. MAG plan, Appendix C, Exhibit 3, pp. 3–10 and 3–11.

In this demonstration, the MAG plan assumes controls only on the ''permitted'' sources, that is, only on those sources that receive permits from MCESD. The plan assumes that all ''nonpermitted'' sources—unpaved roads, vacant lots, and unpaved parking lots—are uncontrolled in 2001. MAG plan, Appendix C, Exhibit 3, pp. 3–10 and 3–11. This latter assumption does not reflect the efforts by MCESD to assure the implementation of BACM on these sources and is inconsistent with the assumptions made for these sources in the annual standard impracticability demonstration.

To check to see if using consistent assumptions between the annual standard and 24-hour standard demonstrations would show that attainment of the 24-hour standard is practicable by 2001, we recalculated the 2001 impacts at each monitor using the control assumptions from the annual standard demonstrations and additional control information from the BMP TSD. In these recalculations, we assume that the sources at the microscale site are in full compliance with the applicable rule. See the ''Extension Request—Demonstrate the Impracticability of Attainment by December 31, 2001'' in the EPA TSD.

Our recalculations show that attainment of the 24-hour standard at the West Chandler site remains impracticable by 2001. The principal sources at this site are an agricultural field, its apron, and a construction site. The site needs substantial reductions, in excess of 50 percent, in agricultural emissions in addition to controls on the construction site before the 24-hour standard can be attained. This level of emission reduction from agricultural sources is not expected until 2006.

However, our recalculations show that attainment of the 24-hour standard at the Gilbert site is practicable by 2001. The site's primary source, an unpaved parking lot, is subject to full control under Rule 310.01 by 2001 and controls on this source together with controls on the other major source at Gilbert, a vacant lot (also required by Rule 310.01) result in the site showing attainment by 2001.

In order to show attainment, a plan must show attainment at each location

within the nonattainment area. Because the West Chandler site is still unable to show attainment of the 24-hour standard by 2001, the Phoenix nonattainment area as a whole is unable to show attainment by that date. Thus the MAG plan's conclusion that attainment of the 24-hour standard in the Phoenix area is impracticable by December 31, 2001 is correct. We, therefore, propose to find that attainment of the 24-hour standard is impracticable by December 31, 2001.

3. Complied With Commitments and Requirements in the SIP

We interpret this criterion to mean that the state has implemented the emissions reducing measures in the plan revisions it has submitted to address the CAA requirements in sections 172 and 189 for PM–10 nonattainment areas.

The two SIP revisions that Arizona has submitted to address PM–10 are the 1991 MAG moderate area plan and the 1997 Microscale plan.

The 1991 MAG plan includes a broad range of measures to address PM–10 including controls for constructions sites, paved road, unpaved roads, unpaved parking areas, vacant lots, and woodburning. The principal controls in this plan were Rule 310 and the County woodburning ordinances. The 1991 plan also included reasonably available control technology for stationary sources and a wide range of transportation control measures. The implementation of the measures in this plan are described in the MAG plan at pp. 10–10 to 10–25. The plan also contained a large number of commitments from the local jurisdictions to implement various measures. Most of the measures represented ''business as usual'' actions by the jurisdictions to do infrastructure (*e.g.*, road) improvements, to implement existing building codes or take actions already underway for the carbon monoxide plan. MAG plan, pp. 10–13 through 10–24.

The 1997 Microscale plan focused on fugitive dust sources such as construction sites, vacant lots, unpaved roads, unpaved parking lots, and agriculture. The principal controls in this plan were improvements to the implementation of Rule 310 and coordination with the cities to improve fugitive dust control. Implementation of the measures in the Microscale plan are discussed in Maricopa County commitments, 1998 Revised Measure 6.

From available information in the MAG plan, we believe that the commitments and requirements in these earlier plans have been met. We, therefore, propose to find that the State has complied with the requirements and commitments in its implementation plan.

4. Include the Most Stringent Measures

In our proposed policy for granting extension requests under CAA section 188(e), we suggest a 5-step process for identifying and adopting MSM. See section V.B.4. of this preamble. This process is similar to the one we have established for determining BACM, but with one additional step, to compare the potential MSM against measures already adopted in the area to determine if the existing measures are most stringent.

The first two steps in our proposed MSM policy are to develop a detailed emissions inventory of PM–10 sources and source categories and to model to evaluate the impact on PM–10 concentrations over the standards of the various source categories to determine which are significant for the purposes of adopting MSM. The MAG plan, however, excludes no source categories of directly-emitted PM–10 from its MSM analysis and moves directly to the third step in the MSM determination, identifying potential MSM in other implementation plans or used in practice in other states for each source categories present in the Phoenix area. MAG plan, p 10–25.

To identify candidate MSM, MAG's contractor Sierra Research interviewed people knowledgeable about PM–10 controls, reviewed the documents used to develop the candidate list of BACM and obtained copies of current air quality control measures from most other States including both SIP and non-SIP measures. MSM Study, p. 1–2.

The fourth step in our proposed policy for MSM is to compare the potential MSM for each significant source category against the measures, if any, already adopted for that source category in the local area. In the MAG plan, after a comprehensive list of candidate MSM was developed, each measure was screened against the corresponding Maricopa measure to identify those with more restrictive emission limitations, more extensive lists of affected sources, fewer exemptions, and/or one or more substantive regulatory provisions not found in the Maricopa measure.

The final step in our proposed policy for MSM is to provide for the adoption of any MSM that is more stringent than existing similar local measures and provide for implementation as expeditiously as practicable or, in lieu of providing for adoption, provide a reasoned justification for rejecting the potential MSM, *i.e.*, why such measures cannot be feasibly implemented in the area. In the MAG plan, MSM that remained after the screening in step 4 were grouped by source category and were either included in the plan or a reasoned justification for rejecting the measure was provided. MSM study, Table 3–1, MAG plan, p. 10–46, and BMP TSD, pp. 19 to 27.

Based on our analysis of the MAG plan's provisions for identifying and adopting MSM, we propose to find that the MAG plan demonstrates to our satisfaction that it includes the most stringent measures that are included in the implementation plan of any State, or are achieved in practice in any State, and can be feasibly be implemented in the Phoenix area.

We have discussed identification and adoption of MSM and the rejection of any MSM for each category deemed significant for BACM earlier in this preamble. The MAG plan identifies three MSMs for categories considered de minimis in the BACM analysis. These categories are cattle feed lots, incinerators, and charbroilers.

Cattle feed lots: MCESD Rule 310.01 requires that owners/operators of commercial feedlots and/or livestock areas apply dust suppressants, apply gravel, or install shrubs and/or trees within 50 to 100 feet of animal pens. The MAG plan identifies South Coast Rule 1186 requirements for livestock operations as a potential MSM for commercial feedlots/livestock areas. However, the two rules control different emission activities at commercial feedlots/livestock areas. South Coast Rule 1186 requires controlling unpaved roads and hay grinding at dairy and horse farms but does not address fugitive dust emissions from disturbed open areas. MCESD Rule 310.01 controls fugitive dust emissions from disturbed open areas at dairies and cattle lots but not unpaved roads and hay grinding.

In the Maricopa County PM–10 nonattainment area, there is only one cattle feedlot and fewer than 80 dairies (most of which are actually outside the nonattainment area). Unpaved roads at dairies are low travel (10 to 20 ADT) and represent a very small source of emissions in the Phoenix area and controls on them would not advance the attainment date and are not necessary for expeditious attainment. We, therefore, propose to find that the MAG plan provides for the implementation of MSM to our satisfaction without Rule 1186 provisions for unpaved roads at cattle feed lots.

In Maricopa County, hay grinding activities occur primarily at feed mills (as opposed to dairies) which are

permitted sources and thus already subject to control requirements.

Incinerators: The MAG plan identifies Clark County's Rule 26 as having a more stringent opacity limit than MCESD's Rule 313. Clark County limits opacity from existing incinerators to 5 percent while Maricopa's limit is 20 percent. MAG plan, Table 10–7. Incinerators are a very small source in the Phoenix nonattainment area. In 1994 there were 32 incinerators that together emitted 2.56 metric tons per *year* (7.1 kg per day). 1994 Regional PM–10 Inventory, p. 4–17. Since then, the medical waste incinerators in this category have shut down and today there are even fewer emissions. Because incinerators are a trivial source and controls on them would not advance the attainment date and are not necessary for expeditious attainment, we propose to find that the MAG plan provides for the inclusion of MSM to our satisfaction without including Clark County's opacity limit for incinerators.

Charbroiling: Emissions from charbroiling and frying meat are estimated to be 0.6 mtpd or 227 mtpy. 1994 Regional PM–10 Inventory, p. 4–25. This is 0.4 percent of the daily directly-emitted PM–10 inventory in 1994 and 0.4 percent of the annual inventory in 1994. MCESD has committed to develop a new rule to require existing and new chain-driven and underfired charbroilers, typically found in restaurants specializing in grilled meat products, to be equipped with emission control equipment. South Coast AQMD is developing a new rule to deal with underfired charbroilers and MCESD will wait until South Coast completes its rulemaking, now scheduled for late 2001, to adopt this measure. Maricopa County commitments, Revised Measure 23. We propose to find that implementation of this rule is expeditious. Waiting on South Coast to complete its rulemaking, which will establish control requirements for underfired charbroilers, is appropriate given that the South Coast rule when adopted will establish MSM for controls on these types of charbroilers.

5. Demonstrate Expeditious Attainment

For the reasons discussed below, we propose to find that the MAG plan demonstrates attainment by the earliest date practicable after December 31, 2001 as required by CAA section 189(b)(1)(A)(ii). We also propose to find that the attainment demonstration relies on control measures that either are approved or have been proposed for approval and meet our SIP enforceability criteria; that the emissions estimates credited to these measures in the attainment demonstration are reasonable; and the measures are being implemented on a schedule that is as expeditious as practicable and will result in attainment by the earliest practicable date.

The following is a brief summary of our evaluation of the modeling in the MAG plan. Our full evaluation is in the EPA TSD section ''Extension Request-Demonstrate Attainment by the Most Expeditious Alternative Date Practicable after December 31, 2001.''

a. Air Quality Modeling

The attainment demonstration for the 24-hour standard is divided into two parts, a microscale analysis and a regional analysis. The microscale part evaluates 24-hour exceedances at four monitoring sites in the Phoenix area using a version of the industrial source complex (ISC) model. The regional part evaluates 24-hour levels throughout the rest of the Maricopa County nonattainment area using the Urban Airshed Model-Linear Chemistry version (UAM–LC).

As discussed previously, Arizona has made three submittals that contain elements of the attainment demonstration for the 24-hour PM–10 standard: the 1997 Microscale plan, the 2000 revised MAG plan, and the 2001 BMP TSD. A more complete description of these submittals can be found in section 2 of this preamble and in section 1 of the EPA TSD. We briefly describe here how these submittals fit together to create the overall attainment demonstration for the 24-hour standard.

The first of the three submittals, the 1997 Microscale plan, contains a microscale, or localized, inventory and modeling analysis using the ISCST model of 24-hour standard exceedances at four monitoring sites in the Phoenix area: Maryvale, Salt River, West Chandler and Gilbert. It shows attainment of the standard at the Maryvale and Salt River sites but does not demonstrate attainment for the Gilbert and West Chandler sites, both of which were substantially affected by agricultural sources.[40]

The second submittal, the 2000 revised MAG plan contains a regional modeling analysis of 24-hour standard exceedances using UAM–LC. It also uses the ISCST model to determine that a 58 percent reduction in agricultural emissions is needed to attain the 24-hour standard at the West Chandler site and 20 percent at the Gilbert site.[41] However, at the time of its submittal, Arizona had not yet completed adoption of its BMP general permit rule and also had not yet quantified the expected reductions from rule and thus was unable to model the impact of the rule at these two sites.

The third submittal, the 2001 BMP TSD, documents the expected emission reductions from the BMP general permit rule. This submittal does not contain new modeling but rather shows that the rule's emission reductions, together with a reasonable estimate of land use change, provide greater reductions than needed for attainment at the Gilbert and West Chandler sites.

1. Modeling Approach to the 24-Hour PM–10 Standard Attainment Demonstration

Our guidance on attainment demonstrations generally assumes that the entire nonattainment area will be modeled using a dispersion model.[42] However, emissions inventory development and modeling for areas with substantial fugitive dust problems, such as the Phoenix area, have proved difficult, because of fugitive dust emissions' marked uncertainty and their temporal and spatial variability. Accurately estimating emissions for input to dispersion modeling of fugitive dust over a large area is much more difficult than for point sources of gaseous pollutants, which were the archetypes for development of much of our modeling guidance.

Thus, in areas dominated by fugitive dust sources, the approach of intensively inventorying and modeling a small area is a reasonable one. This approach is also more reflective of the nature of fugitive dust. Fugitive dust PM–10 is emitted near ground level and has relatively sharp spatial gradients as dust settles out with distance from the source, and hence has more localized effects than the other criteria pollutants, which are typically buoyant and gaseous.

Under the microscale approach used in the MAG plan, the areas around the exceeding monitors are deemed to be representative of locations throughout the nonattainment area. Attainment is

[40] Because we have already approved the attainment demonstrations at the Maryvale and Salt River sites, we do not further discuss these sites in this proposal. See 62 FR 41856, 41863.

[41] See p. 3–9 in ADEQ, ''Evaluation for Compliance with the 24-hour PM–10 Standard for the West Chandler and Gilbert Microscale Sites,'' June 1999 (ADEQ TSD), found in Appendix C, Exhibit 3 of the MAG plan.

[42] A dispersion model models how emissions from sources are dispersed into the atmosphere based on local wind patterns and speeds and other meteorological parameters. The two principal inputs into a dispersion model are temporally- and spatially-distributed emissions and meteorological information.

demonstrated at locations representing the various mixes of emission sources that occur in the area. Although a specific emitting activity, such as new housing construction, will eventually decline in a given location, it will reappear elsewhere as the metropolitan area grows. A location that is currently experiencing a lot of construction can thus be used to represent locations where construction will occur in the future. Moreover, in the MAG plan all locations exceeding the 24-hour PM–10 standard in 1995 were subjected to analysis. A demonstration of attainment at these locations will show that the mixes of sources that caused exceedances in the Phoenix area will be controlled sufficiently to meet the standard.

Although there is solid reasoning underpinning the microscale approach in a fugitive dust-dominated area such as Phoenix, there is concern that for a large urban area the sheer number of sources, especially fugitive dust area sources, could make for a pervasive regional component of PM–10 in addition to the more localized or microscale component. Additionally, a portion of PM–10 is fine particles, which can stay suspended longer and so can be transported greater distances than coarse particulate.

Fine particulate includes secondary particulate, which forms chemically in the air from precursors like ammonia and oxides of sulfur and nitrogen. Secondary particulate is formed by chemical reactions in a mixture of emissions from various sources, spread over hours and a spatial scale of 10's of kilometers. Like ozone, it is a regional pollutant, and so needs to be modeled on a larger scale. Although only a small fraction (4 percent) of the total PM in the Maricopa area, secondary particulate is present. While this regional component could partly be addressed by adding a background concentration to microscale modeling, the determination of a background is ambiguous since it includes the effect of sources similar to those in the microscale domain. For these reasons, the MAG plan include regional modeling in addition to the microscale analysis.

2. EPA's Review of the Air Quality Modeling in the MAG Plan

In today's proposal, we focus our discussion on the supplemental microscale modeling for the Gilbert and West Chandler sites in the ADEQ TSD and the evaluation of the agricultural general permit rule in the BMP TSD. We have already extensively reviewed both the microscale modeling and the regional modeling in previous proposals and found them acceptable. See our proposal on the Microscale plan at 62 FR 31025, 31029 and the proposal on the annual standard at 65 FR 19964, 19985.[43] See also the EPA TSD section on ''Extension Request-Demonstrate Attainment by the Most Expeditious Alternative Date Practicable after December 31, 2001.''

The approach used for the supplemental modeling in the ADEQ TSD is essentially the same approach used in the Microscale plan. They differ in just three ways. First, the ADEQ TSD uses a new calculation of background concentrations (that is, the impact on ambient PM–10 levels in the microscale area of sources outside the microscale area). Second, it evaluates PM–10 concentrations at multiple locations within the microscale domain. Finally, it evaluated various levels of reductions from agricultural controls, in order to determine the emission reductions needed for attainment.

New background values were calculated in order to reflect the regional implementation of controls. These controls reduce the contribution to ambient PM–10 levels in the microscale area of sources outside the microscale area. To recalculate the background values, ADEQ split the background between windblown and non-windblown contributions, applying controls only to the windblown contribution. See ADEQ TSD, p. 3–7.

The evaluation of PM–10 concentrations at multiple locations within the microscale area is an improvement to the previous microscale modeling. In the Microscale plan, the evaluation was limited to the actual location of the ambient air quality monitor within the microscale domain.

The evaluation of the emissions reductions needed for attainment in 2006 at the West Chandler site (assuming a 90 percent level of control on the construction site) showed that a 58 percent reduction in emissions from agricultural aprons and fields was needed. For the Gilbert site, a 20 percent emission reduction is shown to be needed from the agricultural apron. ADEQ TSD, pp. 3–9.

The BMP TSD shows that BMP general permit rule, together with a reasonable estimate of land use changes, provide a 60.3 percent reduction by 2006. This reduction is sufficient to demonstrate attainment by 2006 at West Chandler. For the Gilbert site, the rule provides more than the 20 percent needed for attainment by 2006. BMP TSD, p. 9.

This 60.3 percent reduction at the West Chandler site is a combination of a 36.6 percent emissions reduction from the BMP general permit and a 37 percent emissions from the conversion of agricultural land to residential and commercial use.[44] This land use conversion rate is derived from a land use model for the overall nonattainment area and represents the reduction regionally in agricultural lands between 1995 and 2006. BMP TSD p. 28.

Under the microscale approach, the areas around the exceeding monitors are deemed to be representative of locations throughout the nonattainment area. Thus, applying regionally the controls needed for attainment at these representative sites is assumed to assure attainment at similar sites throughout the nonattainment area. One aspect of this approach, which was not adequately explored in earlier submittals, is to how to treat the inevitable changes in land uses and activities within the microscale domains. For example, construction activity, like that at the West Chandler site, will eventually be completed and no longer contribute to emissions in the area.[45]

A land use and socioeconomic model, in conjunction with a dispersion model, could legitimately show that exceedances no longer occur in the area simply based on this change in land use. However, just waiting for land use changes alone to reduce emissions is not an acceptable method of demonstrating attainment at the individual microscale sites because once again, the premise underlying the microscale approach is that each site is representative of other similar areas in the nonattainment area. In a growing metropolitan area like that of Phoenix, there will always be areas with on-going construction.

On the other hand, the opposite extreme of assuming no conversion of agricultural lands at all does not seem reasonable either. The reality is that the

[43] For the regional model, 65 individual days were analyzed in the base year and attainment year, that is, MAG ran the UAM–LC model for each of these 65 24-day days. To evalute the 24-hour standard, the individual results from each one of these modeling runs are used. To evaluate the annual standard, the results from all the modeling runs for each year are averaged together. Thus, in reviewing the modeling for the annual standard demonstrations, we necessarily also reviewed the modeling for the regional 24-hour standard demonstrations.

[44] The reductions are not additive because the BMP general permit rule reduces emissions only from the land left in agricultural production. The overall control effectiveness is calculated as the percent lost agricultural lands + BMP rule effectiveness * percent remaining agricultural lands or 37% + 0.366*63%.

[45] In fact, at the West Chandler site, the construction is complete and agricultural land has been converted to residential and commercial uses.

metropolitan area is growing and agricultural land is rapidly being converted. Such changes have been observed over the past decades and are projected to continue.

In this situation, using an estimate from the area's land use model of the conversion of agricultural lands to occur by 2006 is a reasonable approach to use. This approach is a compromise between the extremes of the no-conversion and the total-conversion assumptions. It is driven by the area's socioeconomic projections that are used for many purposes and represent the best available information about the land use changes the overall area will experience.

Also, using an area average figure is consistent with the area wide application of control measures required under the submittal's approach. Reliably predicting the conversion for a particular small area (several square miles in the microscale approach) would be problematic in any case, since it would depend on knowing individuals' purchase decisions and development plans. Aggregate conversion figures, driven by larger economic forces and representing the average of many actions, should be more reliable.

Assuming some land use change is more in line with the traditional use of microinventories in EPA's PM–10 attainment demonstration guidance, and also is in line with how attainment demonstrations are performed in general. Typically the projections for land use, employment, industrial production, population, vehicle traffic, etc. are part of the baseline conditions assumed in projecting future air quality; in an attainment demonstration they are independent of, but used in conjunction with, estimates of control measure effectiveness. In other words, reductions that occur naturally because of socioeconomic changes are implicitly counted in attainment demonstrations. Conversely, growth in emission sources, e.g., vehicle traffic, are also implicitly counted and must be compensated for by additional emission reductions.

In summary, we believe that the approach used in 2001 BMP TSD, while not completely consistent with how the microscale approach was implemented in the 1997 Microscale plan, nevertheless, is a reasonable balance between different possible implementations of a microscale approach. Overall, we propose to find that technical evaluation in the MAG plan is adequate to support the attainment demonstration for the 24-hour standard at the West Chandler and Gilbert sites.

b. Control Measures Relied on for Attainment

For demonstrating attainment of the 24-hour PM–10 standard, the MAG plan relies on reductions in directly-emitted PM–10 from 3 measures: MCESD's Rules 310 and 310.01 and the agricultural BMP general permit rule. ADEQ TSD, pp. 3–3 to 3–6 and BMP TSD, p. 8. We have proposed to approve all of these measures. See 65 FR 19992, 19989 and 66 FR 34598.

As part of these proposed approvals, we have evaluated each of these measure to ensure that it meets our SIP enforceability criteria. These criteria ensure that the measure's compliance requirements-applicability, performance standards, compliance schedule, and monitoring methods—are clear. For MCESD's rules, see sections on proposed approval of Rule 310 and 310.01 in the TSD supporting the annual standard proposal. For the agricultural general permit rule, see 66 FR 34598.

We have also evaluated the emissions reductions credited to each measure in the attainment demonstrations to ensure they are reasonable. In performing the microscale analysis, ADEQ first determined that each significant, non-agricultural source at the microscale sites (e.g., the unpaved parking lot at the Gilbert site) was large enough to be subject to Rules 310 or 310.01.[46] For each of these sources, ADEQ then applied the control factor used in the Microscale plan for that source. Except for the agricultural sources, it did not use rule effectiveness factors for either the sources in the microscale component or the sources in the windblown background component in the attainment demonstrations.

Rule effectiveness (RE) accounts for emission reductions lost because of noncompliance, control equipment downtime, failure to apply adequate controls, or failure to use control equipment properly. One hundred percent rule effectiveness is the ability of a regulatory program to achieve all the emission reductions that could be achieved by full compliance with the applicable regulations at all sources at all times. Because RE factors are intended to reflect the variations in compliance among large numbers of sources, they are applied to source categories rather than to individual sources.

We agree that it is appropriate not to apply an RE factor to the individual sources at each microscale site;[47] however, we believe that an RE factor should be applied to the windblown background source categories because each category represents multiple sources. To determine the effect of applying the RE factor to sources in the windblown background, we re-evaluated the attainment demonstrations at both Gilbert and West Chandler. We found that the plan still demonstrates attainment of the 24-hour standard as expeditiously as practicable. See EPA TSD section ''Extension Request-Demonstrate Attainment by the Most Expeditious Alternative Date Practicable after December 31, 2001,''

We find that the emission reduction estimates for each source category are consistent with research on the applicable control methods and are appropriately applied in the attainment demonstrations. For more information on the quantification of emission reductions from Rules 310 and 310.01 see the section ''Extension Request-Demonstrate Attainment by the Most Expeditious Alternative Date Practicable after December 31, 2001'' in the EPA TSD for the annual standard proposal. For more information on the quantification of emission reductions from the agricultural general permit rule, see the section ''Implementation of BACM and Inclusion of MSM for Agricultural Sources'' in the EPA TSD for this proposal.

We have also determined that the measures relied on for attainment are being expeditiously implemented. Rule 310 and 310.01 are effective now. Implementation of the agricultural general permit rule began in July 2000 and will be completed by December 31, 2001.

6. Other Factors That EPA May Consider

CAA section 188(e) list five additional factors that we may consider in deciding whether to grant an extension and the length of that extension.

The MAG plan provides information addressing each of the factors in Chapter 10 of the plan. Nothing in this additional information presented on the five factors suggests that granting an extension of the attainment date for the Phoenix area to 2006 is inappropriate.

a. Nature and Extent of Nonattainment

In the Phoenix area, elevated 24-hour levels of PM–10 occur mainly in areas with large fugitive dust sources or with a concentration of fugitive dust sources.

[46] Rule 310 and Rule 310.01 do not apply to sources under a certain size. For example, Rule 310.01 does not apply to vacant lots under 0.1 acres. Rule 310.01, section 301.

[47] At each microscale site, there is only a single source in each category, that is there is a single vacant lot, a single construction site, a single agricultural field with its apron, a single unpaved parking lot.

Areas such as this can be found throughout the Phoenix nonattainment area, so we would expect that there are elevated 24-hour PM–10 levels throughout the Phoenix area. In order to attain the 24-hour standard in this situation, controls need to be uniformly implemented throughout the area, a task that generally requires longer to achieve than implementing controls in a few localized areas.

b. Types and Numbers of Sources or Other Emitting Activities

Primary contributors to elevated PM–10 levels are fugitive dust sources including paved road dust, unpaved roads, construction activities, disturbed vacant lands, unpaved parking lots, and agricultural sources. MAG plan, p. 10–51. These sources are ubiquitous in the nonattainment area and collectively number in the thousands. For example, MCESD issued 2500 construction permits in 1999; we mailed 50,000 letters to owners of vacant lots in the nonattainment area to inform them of our FIP fugitive dust rule; there are 12,000 miles of roadway in the nonattainment area.

c. Population Exposure to Concentrations Above the Standard

The MAG plan estimates population exposure to elevated levels of PM–10 (both annual and 24-hr) to be from 78,000 to 163,000 (1995 figure), p. 10–13. This population exposure is calculated using estimates of disturbed land versus population in subareas of the nonattainment area. According to this calculation, 84 percent of Maricopa's population lives in areas where 10 percent or less of the land is open. MAG plan, Table 10–13. However, the plan does provide for implementation of RACM, BACM, and MSM on disturbed land (including construction) and paved and unpaved roads with much of the emission reductions being achieved in the first few years. All these factors will reduce population exposure as quickly as practicable.

d. Presence and Concentration of Potentially Toxic Substances in the Particulate

The primary source of airborne cancer risk in the Maricopa area is internal combustion engine exhaust from both on and nonroad engines. This risk is from all pollutants emitted from these sources (gaseous and particulate). MAG plan, p. 10–61. The MAG plan concludes that the cancer risk in the Phoenix area is comparable to that in California cities, p. 10–61. The MAG plan and other Arizona programs (e.g., cleaner burning gasoline, national emission standards for nonroad engines) target emissions from on and nonroad engines.

Almost all of the PM–10 emission reductions in the out years of the MAG plan (2003 and later) are and need to be from fugitive dust sources in order to show attainment of the 24-hour PM–10 standard and not from on- and nonroad engines; therefore, extending the attainment date does not affect the degree of public exposure to the major source of toxic risk because shortening the extension would not accelerate controls on the major source of toxic risk, on- and nonroad engines.

e. Technological and Economic Feasibility of Controls

Fugitive dust sources dominate the emissions inventory in the Maricopa nonattainment area and are the most significant contributors to 24-hour PM–10 exceedances. Controls for these sources are well known (paving, wetting surfaces, etc.) and have been adopted; however, the number of sources and nature of sources make education and outreach necessary to assure full compliance with those controls. In addition, costs for paving roads and other capital improvements needed to reduce PM–10 emissions are high and necessary funds are only available over a number of years. These factors generally support a longer time frame for attainment.

7. Conclusion on Extension Request

Based on our review of the MAG plan and our proposed determination that it meets the requirements necessary for granting an extension of the attainment date under CAA section 188(e), we are proposing to grant a five-year extension of the attainment date for the 24-hour PM–10 standard in the Phoenix PM–10 serious nonattainment area from December 31, 2001 to December 31, 2006.

H. Reasonable Further Progress and Quantitative Milestones

CAA section 172(c)(2) requires nonattainment plans to provide for reasonable further progress (RFP). Section 171(1) of the Act defines RFP as ''such annual incremental reductions in emissions of the relevant air pollutant as are required by this part [part D of title I] or may reasonably be required by the Administrator for the purpose of ensuring attainment of the applicable national ambient air quality standard by the applicable date.''

CAA section 189(c) also requires PM–10 plans demonstrating attainment to contain quantitative milestones which are to be achieved every 3 years until the area is redesignated attainment and which demonstrate RFP. These quantitative milestones should consist of elements that allow progress to be quantified or measured. Addendum at 42016.

1. Reasonable Further Progress

The MAG plan provides for annual progress toward attaining the 24-hour standard. This demonstration shows that most of the projected reductions occur after 2001; however, this is an artifact of the assumption that there are no controls on agricultural sources, vacant lots and unpaved parking prior to December 31, 2001. This assumption does not reflect the efforts by MCESD to assure the implementation of BACM on these sources and the requirement for BMPs to be implemented by then. If the RFP demonstration is revised to include emission reductions from BACM on these sources, then the majority of the emission reductions occur before 2001. See the ''Reasonable Further Progress and Quantitative Milestones'' section in the EPA TSD.

In order to demonstrate RFP, the plan first regionalizes the inventories at the two microscale sites by multiplying emissions from each source by a factor of 360, which is the ratio of the size of the nonattainment area (2,880 square miles) to the size of the microscale sites (8 square miles). It then calculates the emission reductions from the application of the adopted measures to these sources. Next, it annualizes these emission reductions by multiplying the sources—which are all windblown sources—by 11, the number of windy days in 1995. Finally, the annualized figure is divided by 365 days to get an average annual day emission reductions. See BMP TSD, pp. 29—31.[48]

Regionalizing and annualizing the microscale inventories is a good approach to demonstrating RFP and establishing milestones for the 24-hour standard in the Phoenix area. Just a few source categories are explicitly identified contributors to exceedances of this standard, and it is effective controls on these categories that are necessary for progress and attainment. Therefore, closely tracking the effect of

[48] There was an error in the original RFP calculation on pages 29 to 31 in the BMP TSD. ADEQ corrected this error and provided us a revised RFP and contingency measure demonstrations and quantitative milestones in a letter. See letter, Jacqueline E. Schafer, ADEQ, to Laura Yoshii, EPA, ''Addendum to June 13, 2001, Submittal of State Implementation Plan revision for the Agricultural Best Management Practices program in the Maricopa County PM–10 Nonattainment Area,'' September 7, 2001 (''ADEQ RFP Addendum Letter'')

those controls on these source categories is essential. Regionalizing and annualizing the microscale inventories allows this to be done.

The plan does not provide emission reduction information for each year between the base modeling year of 1995 and the attainment year of 2006. We do not believe that this level of detail is necessary or meaningful given the evidence that progress is being made over time and the implementation of controls are not being delayed. Therefore, we propose to find that the MAG plan provides for ''such annual incremental reductions in emissions of the relevant air pollutant as are required by this part [part D of title I] or may reasonably be required by the Administrator for the purpose of ensuring attainment of the [24-hour PM–10] national ambient air quality standard by the applicable date'' as required by section 172(c)(2) of the Act.

2. Quantitative Milestones

Quantitative milestones based on regionalized and annualized microscale inventories are provided for 2001, 2003, and 2006. See RFP Addendum Letter, Enclosure 2. These are the same milestone years used for the annual standard. See 65 FR 19964, 19988. The assumptions regarding control measures' implementation and effectiveness that underlie the quantitative milestones are reasonable and consistent with the RFP demonstration.

The plan does not provide milestones for each of the two microscale sites. Milestones are intended as checks along the way, a means of judging actual emission reductions and control measure implementation against those projected in the plan. Arguably, given the microscale analysis that is the basis for the Phoenix area's 24-hour standard plan, quantitative milestones should be established for both the West Chandler and Gilbert sites. However, this approach would actually defeat the purpose of the quantitative milestones rather than fulfill it.

In order to report on a quantitative milestone at the microscale sites, Arizona would need to evaluate the implementation of controls at each site. However, land uses and activities around each of these microscale sites have changed significantly since 1995. For example, at the West Chandler site, the road construction has been completed and the agricultural field and its apron have been converted into stores. Thus, reporting on each site's quantitative milestones would tell us more about the land use changes around each site than about the implementation of controls. Because of this, the quantitative milestones for the 24-hour plan need to reflect regional implementation of controls. The MAG plan's approach of regionalizing and annualizing the emissions inventories from the microscale sites and then basing its RFP demonstration and milestones on the resulting inventory is an appropriate way to deal with these requirements for the 24-hour standard.

For these reasons, we propose to find that the MAG plan meets the quantitative milestone requirement in CAA section 189(c)(1) for the 24-hour standard.

I. Contingency Measures

Section 172(c)(9) of the Clean Air Act requires that implementation plans provide for the implementation of specific measures to be undertaken if the area fails to make RFP or attain by its attainment deadline. These contingency measures are to take effect without further action by the State or the Administrator. The Act does not specify how many contingency measures are necessary nor does it specify the level of emission reductions they must produce.

We interpret the ''take effect without further action by the State or the Administrator'' to mean that no further rulemaking actions by the State or EPA would be needed to implement the contingency measures. Addendum at 42015.

The purpose of contingency measures is to ensure that additional emission reductions beyond those relied on in the attainment and RFP demonstrations are available if there is a failure to make RFP or attain by the applicable attainment date. These additional emission reductions will assure continued progress towards attainment while the SIP is being revised to fully correct the failure. To ensure this continued progress, we recommend that contingency measures provide emission reductions equivalent of one year's average increment of RFP. Addendum at 42016.

Certain core control measure requirements such as RACM, BACM, and MSM may result in a state adopting and expeditiously implementing more measures than are strictly necessary for expeditious attainment and/or RFP. Because of this and because these core requirements effectively require the implementation of all non-trivial measures that are technologically and economically feasible for the area, states are left with few, if any, substantive unimplemented control measures. In fact, under the Act's PM–10 planning provisions, if there were a measure or set of measures that were technologically and economically feasible and could collectively generate substantial emission reductions, e.g., one year's worth of RFP, then a state would be hard pressed to justify withholding their implementation.[49]

If we read the CAA to demand that the only acceptable contingency measure are those that are adopted but not implemented, then states face a difficult choice: adopt the controls for immediate implementation and clearly meet the core control measure requirements but fail the contingency measure requirement or adopt the control measures but hold implementation in reserve to meet the contingency measure requirement but potentially fail the core control measure requirements.

However, states do not need to face this difficult choice if we read the CAA to allow adopted and implemented measures to serve as contingency measures, provided that those measures' emission reductions are not needed to demonstrate expeditious attainment and/or RFP. There is nothing in the language of section 172(c)(9) that prohibits this interpretation. This approach to the contingency measure requirement also has the benefit of allowing states to build uncredited cushions into their attainment and RFP demonstrations, which makes actual failures to make progress or attain less likely, while still obtaining the air quality and public health benefits from the implemented measures.

We have allowed this approach, which is effectively the early implementation of contingency measures, in ozone and carbon monoxide plans. See *memorandum*, G. T. Helms, Chief, Ozone/Carbon Monoxide Programs Brand, OAQPS to Air Branch Chiefs, Regions I-X, ''Early Implementation of Contingency Measures for Ozone and Carbon Monoxide (CO) Nonattainment Areas,'' August 13, 1993. In this memorandum, we note that several states wished to implement their contingency measures early even though they were not needed for their attainment or RFP demonstrations and that ''[i]t seems illogical to penalize nonattainment areas that are taking extra steps to ensure attainment of the NAAQS by having them adopt additional [replacement] contingency measures now.'' This rationale applies with equal force to PM–10 plans.

[49] We do not believe that States are obligated by section 172(c)(9) to adopt infeasible or unreasonable measures or measures that individual or collectively have trivial benefit.

Annual Standard

The revised MAG plan as submitted in February 2000 identifies 5 measures as contingency measures with a collective emission reduction of 5.5 mtpd: the agricultural BMP general permit rule, off-road engine standards, the clean burning fireplace ordinance, and additional dust controls from the cities of Tempe and Phoenix. MAG plan, p. 8–19.

Since the MAG plan was submitted, Arizona has made changes to its contingency measure package for the annual standard. First, Arizona has withdrawn its commitment to adopt California's off road vehicle standards because the federal nonroad program produces essentially the same emission reductions. ADEQ Off-Road Letter. Second, the emission reductions from the agriculture contingency measure have been recalculated based on the BMP general permit rule as adopted. The emission reductions from the revised contingency measures package are now 6.9 mtpd. See EPA TSD ''Contingency Measures'' for more details on the emission calculations.

All the measures that have been identified in the MAG plan as contingency measures have been adopted and are being implemented but are not credited in the attainment, RFP or milestone demonstrations for the annual standard and are not necessary to demonstrate expeditious attainment of that standard. Under our applicable policies, states are allowed to use implemented but uncredited measures as contingency measures.

Under our contingency measure policy, we recommend contingency measures have total emission reductions equal to or more than the annual RFP increment. For the Phoenix area, the average annual increment in RFP for the annual standard is 5.5 mtpd/year for the full 11-year period, 1995 to 2006. See EPA TSD, ''Reasonable Further Progress and Quantitative Milestones.'' Collectively, the specified contingency measures generate 6.9 mtpd.

Based on this analysis, we propose to find that the MAG plan provides for the implementation of contingency measures for the annual standard as required by CAA section 172(c)(9).

24-Hour Standard

The identified contingency measure for the 24-hour standard is controls for unpaved roads and alleys. BMP TSD, p. 30. This measure comprises not only the unpaved road provisions in MCESD Rule 310.01 but also the commitments by local jurisdictions to control unpaved roads. See MAG plan, pp. 7–75 to 7–94. This measure is estimated to reduce emissions by 12.19 mtpd in 2006. MAG plan, p. 8–9. The average annual increment in RFP for the 24-hour standard is 10.9 mtpd/year. See ADEQ RFP Addendum Letter, Enclosure 1.

The unpaved road measure that is identified in the MAG plan as contingency measure for the 24-hour standard has been adopted and is being implemented but is not credited in the attainment, RFP or milestone demonstrations for the 24-hour standard and is not necessary to demonstrate expeditious attainment of that standard. Under our applicable policies, states are allowed to use implemented but uncredited measures as contingency measures.

Based on this analysis, we propose to find that the MAG plan provides for the implementation of contingency measures for the 24-hour standard as required by CAA section 172(c)(9).

J. General SIP Requirements

Section 110(a)(2)(E)(i) of the Clean Air Act requires that implementation plan provide necessary assurances that the State (or the general purpose local government) will have adequate personnel, funding and authority under State law. Requirements for legal authority are further defined in 40 CFR part 51, subpart L (51.230–51.232) and for resources in 40 CFR 51.280.

States and responsible local agencies must demonstrate that they have the legal authority to adopt and enforce provisions of the SIP and to obtain information necessary to determine compliance. SIPs must also describe the resources that are available or will be available to the State and local agencies to carry out the plan, both at the time of submittal and during the 5-year period following submittal of the MAG plan.

Other than revisions to Maricopa County's revised commitments to improve Rule 310, we are not proposing to approve any control measures in this proposal. All commitments and rules relied on in the MAG plan to meet the CAA requirements for the 24-hour PM–10 standard are already approved, were proposed for approval in the annual standard proposal, or proposed for approval in a subsequent notice. In these notices, we have already proposed to find that the implementing agencies for the MAG plan have adequate resources for implementing their respective commitments and provided an opportunity for comment. We are not reproposing these findings.

Finally, we initially proposed to find in the annual standard proposal that all agencies and jurisdictions have adequate authority under Arizona state law to implement their respective commitments and, where applicable, to obtain information necessary to determine compliance. 65 FR 19964, 19989. While minor changes have been made to several control measures (*e.g.*, the remote sensing program), the State continues to have adequate authority to implement the measures. No other changes have been made to any agencies and/or jurisdictions authority since we proposed the annual standard.

Section 110(a)(2)(C) requires SIPs to include a program to provide for the enforcement of SIP measures. The implementing regulation for this section is found at 40 CFR 51.111(a) and requires control strategies to include a description of enforcement methods including (1) procedures for monitoring compliance with each of the selected control measures, (2) procedures for handling violations, and (3) the designation of the agency responsible for enforcement.

The principle control measures in the plan are MCESD's Rules 310 and 310.01 and the BMP General Permit. Procedures for monitoring compliance (*i.e.*, the inspection strategy) with these rules are described in Maricopa County's commitments and the BMP TSD. See Maricopa County commitment, 1999 Revised Measure 6 and BMP TSD, pp 33–34.

Based on the review of MCESD's enforcement procedures, we propose to find that the MAG plan adequately provides for the enforcement of the principle measures relied on for attainment and that the plan includes an adequate description of enforcement methods as required by our regulations.

Section 110(a)(2)(E)(iii) requires SIPs to include necessary assurances that where a State has relied on a local or regional government, agency or instrumentality for the implementation of any plan provision, the State has responsibility for ensuring adequate implementation of the such plan provision.

We have previously found that Arizona law includes the necessary assurances that where a State has relied on a local or regional government, agency or instrumentality for the implementation of any plan provision, the State has responsibility for ensuring adequate implementation of the such plan provision. 60 FR 18010, 18019 (April 10, 1995).

V. CAA Requirements for BACM and Attainment Date Extension and EPA's Guidance on Meeting These Requirements

A. Implementation of Best Available Control Measures

Under section 189(b)(2), serious area PM–10 plans must provide assurances that BACM will be implemented in the area no later than four years after the area is reclassified as serious. For Phoenix, the BACM implementation deadline was June 10, 2000.

The Act does not define what level of control constitutes a BACM-level of control. In guidance, we have defined it to be, among other things, the maximum degree of emission reduction achievable from a source or source category which is determined on a case-by-case basis, considering energy, economic and environmental impacts. Addendum at 42010. This level of control is dependent on the deadline by which BACM must be implemented.[50]

We also considered a BACM-level control as going beyond existing RACM-level controls, such as expanding use of RACM (*e.g*, paving more miles of unpaved roads). Addendum at 42013. Additionally, we believe that BACM should emphasize prevention rather than remediation (*e.g.*, preventing track out at construction sites rather than simply requiring clean up of tracked-out dirt). Addendum at 42013.

BACM is a best available *control measure.* A control measure is a combination of a statement of applicability and the control requirement, that is, what sources in the category are subject to the measure and what the measure require the sources to do to reduce emissions.[51] Both these elements must be specified before the measure's level of control (i.e., its stringency) can be determined, thus in setting out a BACM, a state must specify both the measure's control requirement and its applicability. The control requirement alone is not sufficient.

BACM must be applied to each significant (*i.e.*, non-de minimis) source category. Addendum at 42011. In guidance, we have established a presumption that a ''significant'' source category is one that contributes 5 μg/m^3 or more of PM–10 to a location of 24-hour violation. Addendum at 42011. However, whether the threshold should be lower than this in any particular area depends upon the specific facts of that area's nonattainment problem. Specifically, in areas that are demonstrating attainment by December 31, 2001, it depends on whether requiring the application of BACM on source categories below a proposed de minimis level would meaningfully expedite attainment. In areas that are claiming the impracticability of attainment by December 31, 2001, it depends upon whether requiring the application of BACM on source categories below a proposed de minimis level would make the difference between attainment and nonattainment by the serious area deadline of December 31, 2001.[52]

The recent decision by the Ninth Circuit Court of Appeals in *Ober* v. *Whitman* 243 F.3d 1190 (9th Cir. 2001) (*Ober II*) supports the use of a de minimis exemption in BACM analyses. *Ober II* was a challenge to our 1998 PM–10 moderate area FIP for the Phoenix area in which we exempted from the RACM requirement, source categories with de minimis impacts on PM–10 levels. In the FIP, we established a de minimis threshold of 1 μg/m^3 for the annual standard and 5 μg/m^3 for the 24-hour standard, borrowing these thresholds from our new source review program for attainment areas to as a starting point in the de minimis analysis. In evaluating the appropriateness of these thresholds, we showed that they did not eliminate controls that would make the difference between attainment and nonattainment by the applicable attainment deadline, and therefore were the appropriate thresholds. See 63 FR 41326, 41330 (August 3, 1998).

In its ruling, the court held that we have the power to make de minimis exemptions to control requirements under the Clean Air Act and that our use of the de minimis levels from the NSR program was appropriate. *Ober II* at 1195 and 1197. In addition, the court determined that it was appropriate for us to use, as a criterion for identifying de minimis sources, whether controls on the sources would result in attainment by the attainment deadline. *Ober II* at 1198. *Ober II* dealt with a de minimis exemption from the RACM requirement, but its reasoning applies equally to the BACM requirement.

We have outlined in our guidance a multi-step process for identifying BACM. Addendum at 42010–42014. The steps are:

1. develop a detailed emissions inventory of PM–10 sources and source categories,
2. model to evaluate the impact on PM–10 concentrations over the standards of the various sources and source categories to determine which are significant,
3. identify potential BACM for significant source categories including their technological feasibility, costs, and energy and environmental impacts when it bears on the BACM determination, and
4. provide for the implementation of the BACM or provide a reasoned justification for rejecting any potential BACM.

B. Extension of the Attainment Date Beyond 2001

Section 188(e) of the Act allows us to extend the attainment date for a serious area for up to five years beyond 2001 if attainment by 2001 is impracticable. However, before we may grant an extension of the attainment date, the State must first:

1. apply to us for an extension of the PM–10 attainment date beyond 2001,
2. demonstrate that attainment by 2001 is impracticable,
3. have complied with all requirements and commitments applying to the area in its implementation plan,
4. demonstrate to our satisfaction that its serious area plan includes the most stringent measures that are included in the implementation plan of any state and/or are achieved in practice in any state and are feasible for the area, and
5. submit a demonstration of attainment by the most expeditious alternative date practicable.
6. the technological and economic feasibility of various control measures.

We may grant only one extension for an area and that extension cannot be for

[50] We have long held that an otherwise available measure is reasonable and thus not an available measure if it cannot be implemented on a schedule that will advance the attainment date. See, for example, 57 FR 13498, 13560 (April 16, 1992). See, also *Delaney* v. *EPA* 898 F.2d 695 (9th Cir. 1990) which required the adoption of ''all available control measures'' to attain ''as soon as possible'' and not simply all available control measures. The most clear example of this is a measure that cannot be implemented until after the applicable attainment date.

[51] An example: a measure requires all unpaved roads with ADT over 150 be stabilized by either paving, graveling, or treating with chemical stabilizers. The control requirement here is ''Stabilize using one of these three methods: paving, graveling, or chemical stabilization'' and the applicability is ''all unpaved roads with ADT over 150.''

[52] This principle is best illustrated by an example: In Area A, attainment of the 24-hour standard by December 31, 2001 requires that PM–10 ambient levels at exceeding locations be reduced by 40 μg/m^3 to 150 μg/m^3. After application of BACM to all source categories above the proposed de minimis level, PM–10 levels are reduced by 32 μg/m^3. BACM on the proposed de minimis source categories would reduce levels by a further 3 μg/m^3, but still leaves ambient levels 5 μg/m^3 short of the reduction needed to show attainment. Since application of BACM to the proposed de minimis source categories still leaves ambient levels above the attainment level of 150 μg/m^3, the proposed de minimis level is appropriate.

more than 5 years after 2001; that is, the extended attainment date can be no later than December 31, 2006. CAA section 188(e).

We first presented our preliminary interpretation of the attainment date extension provision in our proposed approval of the annual standard provisions in the MAG plan. See 66 FR 19992, 19967. Based on comments we received on it during that proposal's comment period, we have clarified certain aspects of the policy but have made no substantive changes to it. We will provide our full response to comments received on the annual standard proposal when we take final action.

This interpretation is our preliminary view of the section 188(e) requirements and we again request comment on it. We emphasize that these are our preliminary views and they are subject to modification as we gain more experience reviewing extension requests from other areas.

In the following sections we discuss the five requirements a State must meet before we can consider granting an attainment date extension.

1. Apply for an Attainment Date Extension

Under CAA section 188(e), a State must apply for an extension of the attainment deadline. The request should be accompanied by the SIP submittal containing the most expeditious alternative attainment date demonstration required by CAA section 189(b)(1)(A)(ii). The state must be provided the public with reasonable notice and a hearing on the request before it is sent to EPA.

Extension requests are not SIP submittals per se [53] and are therefore not subject to the requirements of the Clean Air Act and our regulations for public notice and hearing on SIP revisions. However, because they can greatly affect the content and ultimate approvability of a serious area PM–10 SIP, we believe a state must give the public an opportunity, consistent with the requirements for SIP revisions, to comment on an extension request prior to submitting it to us.

2. Demonstrate That Attainment by 2001 is Impracticable

In order to demonstrate impracticability, the plan must show that the implementation of BACM on significant (that is, non-de minimis) source categories will not bring the area into attainment by December 31, 2001. In serious areas, BACM is required to be in place in advance of the 2001 attainment date; therefore, we believe that it is reasonable to interpret the Act to require that a state provide at least for the implementation of BACM on significant source categories before it can claim impracticability of attainment by 2001.[54] This interpretation parallels our interpretation of the impracticability option for moderate PM–10 nonattainment areas in section 189(a)(1)(B). In moderate areas, RACM was required before a moderate area plan could claim impracticability of attainment by 1994, the moderate area attainment date. See 57 FR 13498, 13544 (April 16, 1992). The Ober II court found this approach reasonable. *Ober II* at 1198.

The statutory provision for demonstrating impracticability requires that the demonstration be based on air quality modeling. See section 189(b)(1)(A). We have established minimum requirements for air quality modeling. See discussion on air quality modeling later in this TSD.

3. Have Complied With all Requirements and Commitments in its Implementation Plan

We interpret this criterion to mean that the state has implemented the emission reducing measures in the plan revisions it has submitted to address the CAA requirements in sections 172 and 189 for PM–10 nonattainment areas.

The purpose of this criterion is to assure that a state is not receiving additional time to attain because it failed to implement already-adopted or already-committed-to control measures. Given this purpose, we believe our review under this criterion should be limited to the implementation status of control measures from earlier PM–10 plans and not be an expansive review of the implementation status of every provision in submitted implementation plans, whether or not it is an emission reducing measure.

We read this provision not to require the area to have a fully approved plan that meets the CAA's requirements for moderate areas. We base this reading on the plain language of section 188(e) which requires the state to comply with all requirements and commitments pertaining to that area *in the implementation plan* but does not require that the state comply with all requirements pertaining to the area *in the Act.* For the same reason, we also read this provision not to bar an extension if all or part of an area's moderate area plan is disapproved or has been promulgated as a FIP or if the area has failed to meet a RFP milestone.

Part of determining whether a state has implemented its commitments and requirements in earlier plans is assessing whether the state retains the legal authority for them and is funding, staffing, and enforcing them at the level assumed or committed to in those plans. Thus any determination that the state has met its commitments and requirements in earlier plans is also a finding that it has retained its legal authority and has met its commitments regarding enforcement, funding, and staffing.

4. Demonstrate the Inclusion of the Most Stringent Measures

The fourth extension criterion requires the State to ''demonstrate to the satisfaction of the Administrator that the plan for the area includes the most stringent measures that are included in the implementation plan of any State, or are achieved in practice in any State, and can be feasibly be implemented in the area.'' CAA section 188(e).

The requirement for most stringent measures (MSM) is similar to the requirement for BACM. We define a BACM-level of control to be, among other things, the maximum degree of emission reduction achievable from a source or source category which is determined on a case by case basis considering energy, economic and environmental impacts. Addendum at 42010. The Act establishes the deadline for implementing BACM as four years after an area's reclassification to serious. CAA section 189(b)(1)(A).

We propose to define a ''most stringent measure'' level of control in a similar manner: the maximum degree of emission reduction that has been required or achieved from a source or source category in other SIPs or in practice in other states and can be feasibly implemented in the area. A MSM then is a control measure that delivers this level of control.

The Act does not specify an implementation deadline for MSM. Because the clear intent of section 188(e) is to minimize the length of any attainment date extension, we propose that the implementation of MSM should be as expeditiously as practicable.

[53] This is clear from the wording of section 188(e) which makes a distinction between the application for an extension and the SIP revision that must accompany it: ''at the time of the such application, the State must submit a revision to the implementation plan that includes a demonstration of attainment by the most expeditious alternative date practicable.'' This attainment demonstration is the one required by section 189(b)(1)(A)(ii).

[54] As described in the section on the BACM requirement, if applying BACM-level controls to one or more of the proposed de minimis source categories would result in attainment by December 31, 2001, then those categories are not de minimis (i.e., they are significant) and must have BACM applied to them. Therefore, states cannot use the de minimis exemption to BACM to avoid applying controls that would result in attainment by 2001.

Given this similarity between the BACM requirement and the MSM requirement, we believe that determining MSM should follow a process similar to determining BACM, but with one additional step, to compare the potentially most stringent measure against the measures already adopted in the area to determine if the existing measures are most stringent:

1. Develop a detailed emissions inventory of PM–10 sources and source categories,
2. Model to evaluate the impact on PM–10 concentrations over the standards of the various source categories to determine which are significant for the purposes of adopting MSM,
3. Identify the potentially most stringent measures in other implementation plans or used in practice in other states for each significant source category and for each measure determine their technological and economic feasibility for the area as necessary,
4. Compare the potentially most stringent measures for each significant source category against the measures, if any, already adopted for that source category, and
5. Provide for the adoption of any MSM that is more stringent than existing similar local measures and provide for implementation as expeditiously as practicable or, in lieu of providing for adoption, provide a reasoned justification for rejecting the potential MSM, *i.e.,* why such measures cannot be feasibly implemented in the area.

The MSM provision only requires that a state consider the best controls from elsewhere in the country for implementation in the area requesting an attainment date extension. It looks to see—and the results are completely dependent on—how well other areas have controlled their PM–10 sources. If other areas have not controlled a particular source or source category well, then the resulting level of control from the MSM will not be the maximum feasible level of control for that source or source category in the local area. Even if they have controlled them well, the resulting level of control may still not be the maximum feasible level because local conditions may allow a higher degree of control than has been achieved elsewhere.

The MSM provision does not require a state to consider if local sources or source categories can be controlled at a level greater than the most stringent level from other areas. In other words, it does not require states to determine and adopt the maximum feasible level of control that could be applied to a source or a source category given local conditions and the additional implementation time afforded by an extension.

In considering the MSM provision, the inclination is to assume that there are always better controls in other areas than there are in the local area. This assumption is unwarranted, especially for areas that have already gone through the process of identifying and adopting BACM for their significant sources in order to meet the section 189(b)(1)(B) requirement. These areas are likely to have already evaluated the best controls from other areas and either adopted them as BACM or rejected them as not feasible for their area. As a result, the likelihood of finding substantial new controls during a MSM evaluation in one of these areas is low.[55]

De Minimis Thresholds. What constitutes a de minimis source category for BACM is dependent upon the specific facts of the nonattainment problem under consideration. In particular, it depends upon whether requiring the application of BACM for such sources would make the difference between attainment and nonattainment by the serious area deadline. We propose to use a similar approach for judging what constitutes a de minimis source category for MSM but instead of the attainment/nonattainment test, we propose to use the test of whether MSM controls on the de minimis sources would result in more expeditious attainment.

We would not review an MSM analysis in a plan if the plan did not demonstrate expeditious attainment since one prerequisite for granting an extension request is that the plan demonstrate attainment. Therefore, any de minimis standard for MSM that relied on the difference between attainment and nonattainment would be meaningless because no additional controls are needed for attainment beyond those already in the plan. Our responsibility under section 188(e), however, is to grant the shortest practicable extension of the attainment date by assuring the plan provides for attainment as expeditiously as practicable. Thus, one means of determining an appropriate de minimis level is to determine if applying MSM to the proposed de minimis source categories would meaningfully expedite attainment. If it did, then the de minimis level is too high, and if it did not, then the de minimis level is appropriate.

Like the RACM and BACM requirements, there is no explicit provision in the Act prohibiting an exemption from the MSM requirement for de minimis sources of PM–10 pollution. We are using here the same principles for determining when a source is considered de minimis under the MSM requirement that we used for the RACM requirement that the *Ober II* court upheld and thus we have constructed the de minimis exemption for the MSM requirement to prevent states from eliminating any controls on sources or source categories that alone or together would result in more expeditious attainment of the PM–10 standards.

Technological feasibility. In the MSM analysis, a state must evaluate the application of controls from elsewhere to sources in its own area. In many cases, these sources are already subject to local control measures. In these situations, part of determining if a control is technologically feasible is determining if the new control can be integrated with the existing controls without reducing or delaying the emission reductions from the existing control. If it cannot, then we would not, in general, consider the measure to be technologically feasible for the area unless the emission benefit of the new measure is substantially greater than the existing measure.

Economic feasibility. Because cost is rarely used to justify rejection of a measure in the MAG plan, we will not attempt to establish a general guide for evaluating when a measure is economically infeasible but instead will address the issue on a case-by-case basis as needed.

Judging stringency. The stringency of a control measure is determined primarily by a combination of its applicability and its control requirement, that is, who in the source category is subject to the measure and what does the measure requires them to do to reduce emissions. When we use the term ''measure'' in the context of the MSM requirement, we are referring to this combination; we are not referring to

[55] There is also an inclination to assume that the MSM requirement is the provision in section 188(e) that implements the Act's general strategy of offsetting longer attainment time frames with more stringer control and therefore, the MSM requirement must be interpreted to result in the adoption of measures more stringent than BACM. We believe, however, that this offsetting function is actually served by the CAA section 189(b)(i)(A)(ii) requirement for PM–10 plans to demonstrate attainment by the most expeditious date practicable, if attainment by 2001 is impracticable. Because we are required to grant the shortest possible extension, a state must demonstrate that it has adopted the set of control measures that will result in the most expeditious date practicable for attainement. This requirement may very well require that a state adopt controls that go beyond the most stringent measures adopted or implemented elsewhere.

just the control requirement or to individual methods of control.

The approach we propose to use in evaluating the selection of the most stringent among multiple measures, i.e., evaluating the determination of when one control measure is more stringent than another, is:

1. If there is only a single measure applicable to a source category then we will compare the measures directly. If there are multiple control measures with diverse controls requirements applicable to a source category (e.g., tailpipe emissions are controlled through fuels, emission standards, inspection and maintenance programs, and transportation control measures) then we will compare measures with similar control requirements against one another. If several measures apply the same or very similar control requirements to a source category, that is they have the same control requirement but different applicablities (e.g., MCESD Rule 310.01 and City and County commitments all require similar controls on unpaved roads), then will use the collective stringency of all the measures in the stringency analysis.

2. We will review all the provisions of a rule that apply to a specific type of source (e.g., all the rule provision that apply to vacant lots) as an inseparable measure. As discussed above a rule's stringency is defined by a combination of its applicability and control requirements (as they apply to a single type of source). They are not separable elements that can be compared in isolation to another rule.[56]

3. In a MSM analysis, a measure's stringency should be determined assuming that it is appropriately adopted, implemented and enforced. Thus, we will not use a measure's implementation mechanisms (e.g., rule versus commitment), funding level, compliance schedule, test method, resources available for enforcement, or other similar items as criteria for judging relative stringency.[57]

A state may determine which measure or measures are most stringent either qualitatively or quantitatively. It is the state's responsibility, however, to assure that any determination is well documented and persuasive.

Once a state has identified a potential most stringent measure, it must provide for the adoption of any MSM that is more stringent than existing measures and provide for implementation as expeditiously as practicable or, in lieu of providing for adoption, provide a reasoned justification for rejecting the potential MSM, i.e., why such measures cannot be feasibly implemented in the area.

Finally, we address how we view the ''to the satisfaction of the Administrator'' qualifier on the requirement that the State demonstrate that its plan includes the most stringent measures. The presence and wording of this qualifier indicates that Congress granted us considerable discretion in determining whether a plan in fact provides for MSM. Under the terms of section 188(e), we believe that we can still accept an MSM demonstration even if it falls short of having every MSM possible. To intuit the limits of this discretion, we again look to the overall intent of section 188(e) that we grant as short an extension as practicable and to how we have interpreted the CAA's other general control requirements, RACM and BACM.

In concrete terms, this means that when judging the overall adequacy of the MSM demonstration, we will give more weight to a failure to include MSM for source categories that contribute the most to the PM–10 problem and to the failure to include measures that could provide for more expeditious attainment and less weight to those measures for source categories that contribute little to the PM–10 problem and would not expedite attainment.

5. Demonstrate Attainment by the Most Expeditious Alternative Date Practicable.

Section 189(b)(1)(A) requires that a serious area plan demonstrate attainment by the most expeditious date practicable using air quality modeling after December 31, 2001. This demonstration is the final criterion that must be met before we may grant an extension request.

There are two parts to reviewing a modeled attainment demonstration: evaluating the technical adequacy of the modeling itself, and evaluating the control measures that are relied on to demonstrate attainment.

We have established technical requirements for modeling PM–10 in SIP attainment demonstrations. Please see discussion later in this TSD on modeling requirements for PM–10 SIPs.

In order to evaluate the control measures relied on in the attainment demonstration to determine if:

1. We have approved it into the SIP or the State has submitted it to us for approval into the SIP.

2. It is enforceable under our SIP-enforceability standards or qualifies to be credited under our mobile source voluntary measures policy.[58]

3. The plan provides reasonable assurances, including funding and other resource commitments, that it will be implemented and enforced.

4. It will be implemented on the most expedient schedule practicable.

5. The emission reductions credited to it are reasonable and consistent with the implementation resources and schedule, and for any reductions coming from mobile source voluntary measures, that they do not collectively exceed 3 percent of the total reductions needed for attainment.[59]

Our determination of whether the plan provides for attainment by the most expeditious date practicable will depend on whether we find that the plan provides for appropriate BACM, MSM, and any other technologically and economically feasible measures that will result in attainment as expeditiously as practicable and that these measures are implemented on an expeditious schedule.

Please see section 3 of the EPA TSD for additional discussion of our proposed interpretation of the extension requirements.

VI. Administrative Requirements

Under Executive Order 12866 (58 FR 51735, October 4, 1993), this proposed action is not a ''significant regulatory action'' and therefore is not subject to review by the Office of Management and Budget. For this reason, this proposed action is also not subject to Executive Order 32111, ''Actions Concerning Regulations That Significantly Affect Energy Supply, Distribution, or Use'' (66 FR 28355, May 22, 2001). This proposed action merely approves state law as meeting federal requirements and imposes no additional requirements beyond those imposed by state law. Accordingly, the Administrator certifies that this proposed rule will not have a significant economic impact on a substantial number of small entities under the Regulatory Flexibility Act (5 U.S.C. 601 *et seq.*). Because this rule

[56] For example, South Coast Rule 403 covers vacant lots, construction sites, and agriculture among other fugitive dust sources. MCESD's Rule 310.01 covers vacant lots and Rule 310 covers construction sites. The Arizona BMP rule covers agricultural sources. Under this test we would evaluate Rule 403's provisions for vacant lots against Rule 310.01 provisions for vacant lots; Rule 403's provisions for construction sites against Rule 310's provision for construction sites; Rule 403's provisions for agricultural sources against the BMP rule's ones.

[57] However, once a State determines a measure is a feasible most stringent measure, it must convert the measure into a legally enforceable form and provide the necessary level of resources, etc. to ensure its implementation.

[58] Memorandum, Richard D. Wilson, Acting Assistant Administrator for Air and Radiation, to EPA Regional Administrators, 1–10, ''Guidance on Incorporating Voluntary Mobile Source Reduction Programs in State Implementation Plans (SIPs),'' October 24, 1997.

[59] Ibid., page 5.

proposes to approve pre-existing requirements under state law and does not impose any additional enforceable duty beyond that required by state law, it does not contain any unfunded mandate or significantly or uniquely affect small governments, as described in the Unfunded Mandates Reform Act of 1995 (Public Law 104–4). This rule also does not have a substantial direct effect on one or more Indian tribes, on the relationship between the Federal Government and Indian tribes, or on the distribution of power and responsibilities between the Federal Government and Indian tribes, as specified by Executive Order 13175 (65 FR 67249, November 9, 2000), nor will it have substantial direct effects on the States, on the relationship between the national government and the States, or on the distribution of power and responsibilities among the various levels of government, as specified in Executive Order 13132 (64 FR 43255, August 10, 1999), because it merely approves a state rule implementing a federal standard, and does not alter the relationship or the distribution of power and responsibilities established in the Clean Air Act. This proposed rule also is not subject to Executive Order 13045 (62 FR 19885, April 23, 1997), because it is not economically significant.

In reviewing SIP submissions, EPA's role is to approve state choices, provided that they meet the criteria of the Clean Air Act. In this context, in the absence of a prior existing requirement for the State to use voluntary consensus standards (VCS), EPA has no authority to disapprove a SIP submission for failure to use VCS. It would thus be inconsistent with applicable law for EPA, when it reviews a SIP submission, to use VCS in place of a SIP submission that otherwise satisfies the provisions of the Clean Air Act. Thus, the requirements of section 12(d) of the National Technology Transfer and Advancement Act of 1995 (15 U.S.C. 272 note) do not apply. As required by section 3 of Executive Order 12988 (61 FR 4729, February 7, 1996), in issuing this proposed rule, EPA has taken the necessary steps to eliminate drafting errors and ambiguity, minimize potential litigation, and provide a clear legal standard for affected conduct. EPA has complied with Executive Order 12630 (53 FR 8859, March 15, 1988) by examining the takings implications of the rule in accordance with the ''Attorney General's Supplemental Guidelines for the Evaluation of Risk and Avoidance of Unanticipated Takings'' issued under the executive order. This proposed rule does not impose an information collection burden under the provisions of the Paperwork Reduction Act of 1995 (44 U.S.C. 3501 *et seq.*).

List of Subjects in 40 CFR Part 52

Environmental protection, Air pollution control, Intergovernmental relations, Particulate matter, Reporting and recordkeeping requirements.

Authority: 42 U.S.C. 7401 *et seq.*

Dated: September 14, 2001.

Mike Schulz,

Acting Regional Administrator, Region IX.

[FR Doc. 01–24203 Filed 10–1–01; 8:45 am]

BILLING CODE 6560–50–P

Reader Aids

Federal Register

Vol. 66, No. 191

Tuesday, October 2, 2001

CUSTOMER SERVICE AND INFORMATION

Federal Register/Code of Federal Regulations

General Information, indexes and other finding aids	**202–523–5227**
Laws	**523–5227**
Presidential Documents	
Executive orders and proclamations	**523–5227**
The United States Government Manual	**523–5227**
Other Services	
Electronic and on-line services (voice)	**523–4534**
Privacy Act Compilation	**523–3187**
Public Laws Update Service (numbers, dates, etc.)	**523–6641**
TTY for the deaf-and-hard-of-hearing	**523–5229**

ELECTRONIC RESEARCH

World Wide Web

Full text of the daily Federal Register, CFR and other publications:

http://www.access.gpo.gov/nara

Federal Register information and research tools, including Public Inspection List, indexes, and links to GPO Access:

http://www.nara.gov/fedreg

E-mail

PENS (Public Law Electronic Notification Service) is an E-mail service for notification of recently enacted Public Laws. To subscribe, send E-mail to

listserv@listserv.gsa.gov

with the text message:

subscribe PUBLAWS-L your name

Use listserv@www.gsa.gov only to subscribe or unsubscribe to PENS. We cannot respond to specific inquiries.

Reference questions. Send questions and comments about the Federal Register system to:

info@fedreg.nara.gov

The Federal Register staff cannot interpret specific documents or regulations.

FEDERAL REGISTER PAGES AND DATE, OCTOBER

49823–50094 1
50095–50286 2

CFR PARTS AFFECTED DURING OCTOBER

At the end of each month, the Office of the Federal Register publishes separately a List of CFR Sections Affected (LSA), which lists parts and sections affected by documents published since the revision date of each title.

3 CFR

Proclamations:
7471 50097
7472 50099
Administrative Orders:
Presidential Determinations:
No. 2001–28 of September 22, 2001 50095

14 CFR

39 .....49823, 49825
71 50101
Proposed Rules:
39 50125

15 CFR

14 49827
742 50090
744 50090

17 CFR

230 50102
232 49829
239 50102
240 50103
270 50102
274 50102
Proposed Rules:
240 49877

19 CFR

122 50103

22 CFR

41 49830

24 CFR

888 50024
985 50004

25 CFR

Proposed Rules:
580 50127

29 CFR

Proposed Rules:
470 50010

33 CFR

165 .....50105, 50106, 50108
Proposed Rules:
155 49877
156 49877

38 CFR

Proposed Rules:
3 49886
4 49886

40 CFR

60 .....49830, 50110
61 50110
62 49834
63 .....50110, 50116
70 .....49837, 49839
271 49841
Proposed Rules:
51 50135
52 50252
60 49894
62 49895
63 50135
70 .....49895, 50136
271 49896

45 CFR

Ch. V 49844

46 CFR

32 49877

47 CFR

Proposed Rules:
64 .....50139, 50140

48 CFR

202 49860
204 49860
211 49860
212 .....49860, 49862
215 49862
219 .....49860, 49863
223 49864
225 49862
232 49864
236 49860
237 49860
242 49860
243 49865
245 49860
248 49865
252 .....49860, 49862, 49864, 49865
253 49862
442 49866

49 CFR

325 49867
355 49867
356 49867
360 49867
365 49867
366 49867
367 49867
370 49867
371 49867
372 49867
373 49867
374 49867
375 49867
376 49867
377 49867
378 49867
379 49867

381 49867
383 49867
384 49867
385 49867
386 49867
387 49867
388 49867
389 49867
390 49867
391 49867
392 49867
393 49867
395 49867
396 49867
397 49867
398 49867
399 49867

Proposed Rules:

171 50147
173 50147
174 50147
175 50147
176 50147
177 50147
178 50147

50 CFR

660 49875

Proposed Rules:

222 50148
223 50148
229 ....49896, 50160
679 49908

REMINDERS

The items in this list were editorially compiled as an aid to Federal Register users. Inclusion or exclusion from this list has no legal significance.

RULES GOING INTO EFFECT OCTOBER 2, 2001

ENVIRONMENTAL PROTECTION AGENCY

Air quality implementation plans; approval and promulgation; various States:

Oregon; published 8-3-01

TREASURY DEPARTMENT

User fee airports; published 10-2-01

COMMENTS DUE NEXT WEEK

AGRICULTURE DEPARTMENT

Cranberries grown in—

Massachusetts et al.; comments due by 10-9-01; published 9-21-01

Dairy products:

Dairy plants approved for USDA inspection and grading service; general specifications; comments due by 10-12-01; published 8-13-01

AGRICULTURE DEPARTMENT

Fresh prunes grown in—

Washington and Oregon; comments due by 10-12-01; published 8-13-01

AGRICULTURE DEPARTMENT

Oranges, grapefruit, tangerines, and tangelos grown in Florida; comments due by 10-9-01; published 9-26-01

AGRICULTURE DEPARTMENT

Food labeling:

United States cattle and United States fresh beef products; definitions; labeling requirements; comments due by 10-9-01; published 8-7-01

Meat and poultry inspection:

Slovakia; addition to list of countries eligible to export meat and meat products to U.S.; comments due by 10-12-01; published 8-13-01

COMMERCE DEPARTMENT

Endangered and threatened species:

Critical habitat designations—

Southern resident killer whales; comments due by 10-12-01; published 8-13-01

Fishery conservation and management:

West Coast States and Western Pacific fisheries—

West Coast salmon; comments due by 10-12-01; published 9-27-01

DEFENSE DEPARTMENT

Privacy Act; implementation; comments due by 10-9-01; published 8-9-01

DEFENSE DEPARTMENT

Federal Acquisition Regulation (FAR):

Trademarks for government products; comments due by 10-9-01; published 8-9-01

Privacy Act; implementation

National Imagery and Mapping Agency; comments due by 10-9-01; published 8-9-01

ENERGY DEPARTMENT

Physicians panel determinations on worker requests for assistance in filing for State workers' compensation benefits; guidelines; comments due by 10-9-01; published 9-7-01

ENERGY DEPARTMENT

Consumer products and commercial and industrial equipment; energy conservation program; meeting; comments due by 10-11-01; published 8-28-01

; comments due by 10-11-01; published 8-28-01

Consumer products; energy conservation program:

Energy conservation standards—

Central air conditioners and heat pumps; comments due by 10-9-01; published 7-25-01

Commercial unitary air conditioners and heat pumps; comments due by 10-12-01; published 8-17-01

ENVIRONMENTAL PROTECTION AGENCY

Air pollutants, hazardous; national emission standards:

Flexible polyurethane foam fabrication operations; comments due by 10-9-01; published 8-8-01

Integrated iron and steel manufacturing facilities; comments due by 10-11-01; published 7-13-01

Air pollution control:

State operating permits programs—

Arizona; comments due by 10-10-01; published 9-10-01

Air programs; approval and promulgation; State plans for designated facilities and pollutants:

Various States; comments due by 10-10-01; published 9-10-01

ENVIRONMENTAL PROTECTION AGENCY

Air programs; approval and promulgation; State plans for designated facilities and pollutants:

Various States; comments due by 10-10-01; published 9-10-01

ENVIRONMENTAL PROTECTION AGENCY

Air quality implementation plans; approval and promulgation; various States:

Alabama; comments due by 10-11-01; published 9-11-01

California; comments due by 10-9-01; published 8-7-01

ENVIRONMENTAL PROTECTION AGENCY

Air quality implementation plans; approval and promulgation; various States:

California; comments due by 10-12-01; published 9-12-01

ENVIRONMENTAL PROTECTION AGENCY

Air quality implementation plans; approval and promulgation; various States:

California; comments due by 10-12-01; published 9-12-01

ENVIRONMENTAL PROTECTION AGENCY

Air quality implementation plans; approval and promulgation; various States:

Colorado; comments due by 10-11-01; published 9-11-01

ENVIRONMENTAL PROTECTION AGENCY

Air quality implementation plans; approval and promulgation; various States:

Colorado; comments due by 10-11-01; published 9-11-01

Delaware; comments due by 10-9-01; published 9-7-01

ENVIRONMENTAL PROTECTION AGENCY

Air quality implementation plans; approval and promulgation; various States:

Maryland; comments due by 10-9-01; published 9-7-01

ENVIRONMENTAL PROTECTION AGENCY

Air quality implementation plans; approval and promulgation; various States:

Maryland; comments due by 10-9-01; published 9-7-01

New Jersey; comments due by 10-11-01; published 9-11-01

ENVIRONMENTAL PROTECTION AGENCY

Air quality implementation plans; approval and promulgation; various States:

Pennsylvania; comments due by 10-9-01; published 9-6-01

ENVIRONMENTAL PROTECTION AGENCY

Air quality implementation plans; approval and promulgation; various States:

Pennsylvania; comments due by 10-9-01; published 9-6-01

ENVIRONMENTAL PROTECTION AGENCY

Air quality implementation plans; approval and promulgation; various States:

Pennsylvania; comments due by 10-10-01; published 9-10-01

ENVIRONMENTAL PROTECTION AGENCY

Air quality implementation plans; approval and promulgation; various States:

Pennsylvania; comments due by 10-10-01; published 9-10-01

ENVIRONMENTAL PROTECTION AGENCY

Air quality implementation plans; approval and promulgation; various States:

Pennsylvania; comments due by 10-11-01; published 9-11-01

ENVIRONMENTAL PROTECTION AGENCY

Air quality implementation plans; approval and

promulgation; various States:
Texas; comments due by 10-9-01; published 9-7-01

ENVIRONMENTAL PROTECTION AGENCY
Hazardous waste program authorizations:
District of Columbia; comments due by 10-10-01; published 9-10-01

ENVIRONMENTAL PROTECTION AGENCY
Hazardous waste; program authorizatiions:
District of Columbia; comments due by 10-10-01; published 9-10-01

ENVIRONMENTAL PROTECTION AGENCY
Superfund program:
National oil and hazardous substances contingency plan—
National priorities list update; comments due by 10-9-01; published 9-6-01

ENVIRONMENTAL PROTECTION AGENCY
Superfund program:
National oil and hazardous substances contingency plan—
National priorities list update; comments due by 10-9-01; published 9-6-01

ENVIRONMENTAL PROTECTION AGENCY
Superfund program:
National oil and hazardous substances contingency plan—
National priorities list update; comments due by 10-11-01; published 9-11-01

ENVIRONMENTAL PROTECTION AGENCY
Superfund program:
National oil and hazardous substances contingency plan—
National priorities list update; comments due by 10-11-01; published 9-11-01
Water supply:
National primary drinking water regulations—
Public notification and consumer confidence report rules; revisions; comments due by 10-9-01; published 9-7-01

FEDERAL COMMUNICATIONS COMMISSION
Frequency allocations and radio treaty matters:
Mobile satellite service providers; flexible use of assigned spectrum over land-based transmitters; comments due by 10-11-01; published 9-13-01
New advanced mobile and fixed terrestrial wireless services; frequencies below 3 GHz; comments due by 10-11-01; published 9-13-01
Radio services, special:
Private land mobile services—
Low power operations in 450-470 MHz band; applications and licensing; comments due by 10-12-01; published 9-12-01

FEDERAL TRADE COMMISSION
Consumer information; safeguard standards; comments due by 10-9-01; published 8-7-01

GENERAL SERVICES ADMINISTRATION
Federal Acquisition Regulation (FAR):
Trademarks for government products; comments due by 10-9-01; published 8-9-01

HOUSING AND URBAN DEVELOPMENT DEPARTMENT
Practice and procedure:
Federal National Mortgage Association and Federal Home Loan Mortgage Corporation—
Flood insurance; comments due by 10-12-01; published 9-12-01

INTERIOR DEPARTMENT
Endangered and threatened species:
Florida manatee; additional protection areas; comments due by 10-9-01; published 8-10-01
Hearings; comments due by 10-9-01; published 8-29-01

JUSTICE DEPARTMENT
Immigration:
Immigration examinations fee adjustment; comments due by 10-9-01; published 8-8-01

LIBRARY OF CONGRESS
Copyright arbitration royalty panel rules and procedures:
Digital performance of sound recordings; reasonable rates and terms determination; comments due by 10-12-01; published 9-27-01

NATIONAL AERONAUTICS AND SPACE ADMINISTRATION
Federal Acquisition Regulation (FAR):
Trademarks for government products; comments due by 10-9-01; published 8-9-01

TRANSPORTATION DEPARTMENT
Drawbridge operations:
Massachusetts; comments due by 10-11-01; published 9-11-01
Ports and waterways safety:
Long Island Sound et al., CT and NY; safety zones; comments due by 10-9-01; published 8-7-01

TRANSPORTATION DEPARTMENT
Airworthiness directives:
Boeing; comments due by 10-9-01; published 8-23-01

TRANSPORTATION DEPARTMENT
Airworthiness directives:
Goodyear Tire & Rubber Co.; comments due by 10-12-01; published 9-4-01

TRANSPORTATION DEPARTMENT
Airworthiness directives:
McDonnell Douglas; comments due by 10-9-01; published 8-24-01
Rolls-Royce plc; comments due by 10-9-01; published 8-9-01

TRANSPORTATION DEPARTMENT
Airworthiness directives:
Rolls-Royce plc.; comments due by 10-9-01; published 8-10-01

TRANSPORTATION DEPARTMENT
Class E airspace; comments due by 10-9-01; published 8-23-01
VOR Federal airways and jet routes; comments due by 10-11-01; published 9-11-01

TRANSPORTATION DEPARTMENT
Processor-based signal and train control systems; development and use standards; comments due by 10-9-01; published 8-10-01

TRANSPORTATION DEPARTMENT
Clean Fuels Formula Grant Program; comments due by 10-12-01; published 8-28-01

TRANSPORTATION DEPARTMENT
Insurer reporting requirements:
Insurers required to file reports; list; comments due by 10-9-01; published 8-7-01

TRANSPORTATION DEPARTMENT
Hazardous materials:
Hazardous materials transportation—
Loading, unloading, and storage; comments due by 10-12-01; published 6-14-01

TREASURY DEPARTMENT
Dog and Cat Protection Act; implementation; prohibitions and penalties; comments due by 10-9-01; published 8-10-01

VETERANS AFFAIRS DEPARTMENT
Adjudication; pensions, compensation, dependency, etc.:
Radiation-risk activities; presumptive service connection for certain diseases; comments due by 10-9-01; published 8-8-01
Correction; comments due by 10-9-01; published 8-31-01

LIST OF PUBLIC LAWS

This is a continuing list of public bills from the current session of Congress which have become Federal laws. It may be used in conjunction with ''P L U S'' (Public Laws Update Service) on 202–523–6641. This list is also available online at *http://www.nara.gov/fedreg/plawcurr.html*.

The text of laws is not published in the **Federal Register** but may be ordered in ''slip law'' (individual pamphlet) form from the Superintendent of Documents, U.S. Government Printing Office, Washington, DC 20402 (phone, 202–512–1808). The text will also be made available on the Internet from GPO Access at *http://www.access.gpo.gov/nara/nara005.html*. Some laws may not yet be available.

H.R. 2603/P.L. 107–43
United States-Jordan Free Trade Area Implementation Act (Sept. 28, 2001; 115 Stat. 243)

H.J. Res. 65/P.L. 107–44
Making continuing appropriations for the fiscal

year 2002, and for other purposes. (Sept. 28, 2001; 115 Stat. 253)

Last List September 25, 2001

Public Laws Electronic Notification Service (PENS)

PENS is a free electronic mail notification service of newly enacted public laws. To subscribe, go to *http://hydra.gsa.gov/archives/publaws-l.html* or send E-mail to **listserv@listserv.gsa.gov** with the following text message:

SUBSCRIBE PUBLAWS-L Your Name.

Note: This service is strictly for E-mail notification of new laws. The text of laws is not available through this service. **PENS** cannot respond to specific inquiries sent to this address.